ORIGINAL

SOLICITATION, OFFER, AND AWARD *(Construction, Alteration, or Repair)*	1. SOLICITATION NUMBER	2. TYPE OF SOLICITATION	3. DATE ISSUED	PAGE OF PAGES
	DACA67-00-B-0003	[X] SEALED BID *(IFB)* [ ] NEGOTIATED *(RFP)*	10-15-99	1

IMPORTANT - The "offer" section on the reverse must be fully completed by the offeror.

4. CONTRACT NUMBER	5. REQUISITION/PURCHASE REQUEST NUMBER	6. PROJECT NUMBER
DACA67-00-C-0202	W68MD9-9236-6498	PN: 41845

7. ISSUED BY CODE W68MD9

Seattle District, Corps of Engineers
ATTN: CENWS-CT-CB
PO Box 3755
Seattle, WA 98124-3755

8. ADDRESS OFFER TO

Seattle District, Corps of Engineers
ATTN: CENWS-CT-CB
PO Box 3755
Seattle, WA 98124-3755

HAND CARRY: Preston Conference Room
4735 East Marginal Way S.
Seattle, WA 98134-2385

BID OPENING ROOM: Preston Conference Room

9. FOR INFORMATION CALL	A. NAME	B. TELEPHONE NUMBER *(Include area code) (NO COLLECT CALLS)*
▶	See Information Page inside Front Cover	See Information Page inside Front Cover

SOLICITATION

NOTE: In sealed bid solicitations "offer" and "offeror" mean "bid" and "bidder".

10. THE GOVERNMENT REQUIRES PERFORMANCE OF THE WORK DESCRIBED IN THESE DOCUMENTS *(Title, identifying number, date):*

Furnish all labor, materials and equipment and perform all work for Athletic Complex, North Ft. Lewis, Washington, in accordance with the attached Contract Clauses, Special Clauses, Technical Specifications and Drawings.

1. Solicitation No. DACA67-00-B-0003 dated 15 Oct 1999 with 8 amendments hereto.
2. Wage Determination No. WA990002 with 13 modifications thereto.
3. Drawings as listed in Section 00 800.
4. See page 00010-2a for alterations to the contract.

NOTE: Award will be made pursuant to the Small Business Competitive Development Program.

11. The Contractor shall begin performance within 10 calendar days and complete it within See SC-1 calendar days after receiving

[ ] award, [X] notice to proceed. This performance period is [X] mandatory, [ ] negotiable. *(See* _____ *.)*

12A. THE CONTRACTOR MUST FURNISH ANY REQUIRED PERFORMANCE PAYMENT BONDS?
(If "YES," indicate within how many calendar days after award in Item 12B.)
[X] YES [ ] NO

12B. CALENDAR DAYS: 10

13. ADDITIONAL SOLICITATION REQUIREMENTS:

A. Sealed offers in original and 0 copies to perform the work required are due at the place specified in Item 8 by 2:00 pm *(hour)* local time 11-18-99 *(date)*. If this is a sealed bid solicitation, offers will be publicly opened at that time. Sealed envelopes containing offers shall be marked to show the offeror's name and address, the solicitation number, and the date and time offers are due.

B. An offer guarantee [X] is, [ ] is not required.

C. All offers are subject to the (1) work requirements, and (2) other provisions and clauses incorporated in the solicitation in full text or by reference.

D. Offers providing less than 90 calendar days for Government acceptance after the date offers are due will not be considered and will be rejected.

SLC No: DACA67-00-B-0003 **OFFER** *(Must be fully completed by offeror)* Ct. No: DACA67-00-C-0202

14. NAME AND ADDRESS OF OFFEROR *(Include ZIP Code)*

Pease Construction, Inc.
PO Box 98046
Lakewood, WA 98498

Tax ID No: 91-1180033 DUNS No: 06-957-1479
eMail: info@peaseinc.com

15. TELEPHONE NUMBER *(Include area code)*

(253) 584-6606 | FAX: (253) 581-7855

16. REMITTANCE ADDRESS *(Include only if different than Item 14)*

CODE FACILITY CODE

17. The offeror agrees to perform the work required at the prices specified below in strict accordance with the terms of this solicitation, if this offer is accepted by the Government in writing within _____ calendar days after the date offers are due. *(Insert any number equal or greater than the minimum requirement stated in 13D. Failure to insert any number means the offeror accepts the minimum in Item 13D.)*

AMOUNTS ▶ See page 00010-4

18. The offeror agrees to furnish any required performance and payment bonds.

19. ACKNOWLEDGEMENT OF AMENDMENTS
(The offeror acknowledges receipt of amendments to the solicitation - give number and date of each)

AMENDMENT NO.	0001	0002	0003	0004	0005	0006	0007	0008		
DATE	11/8/99	11/18/99	11/12/99	11/24/99	11/24/99	12/03/99	12/7/99	12/8/99		

20A. NAME AND TITLE OF PERSON AUTHORIZED TO SIGN OFFER *(Type or print)*

Patricia A. Candiotta, President

20B. SIGNATURE

Patricia A. Candiotta

20C. OFFER DATE

12/14/99

AWARD *(To be completed by Government)*

21. ITEMS ACCEPTED

Base CLINS 0001, 0002, 0004, 0005, 0006, and 0007

22. AMOUNT

$5,386,891

23. ACCOUNTING AND APPROPRIATION DATA

See Page 00010-2(a)

24. SUBMIT INVOICES TO ADDRESS SHOWN IN *(4 copies unless otherwise specified)* ▶ ITEM 26

25. OTHER THAN FULL AND OPEN COMPETITION PURSUANT TO
☐ 10 U.S.C. 2304(c) ( ) ☐ 41 U.S.C. 253(c) ( )

26. ADMINISTERED BY CODE

United States Army Corps of Engineers Seattle District
Northwest Area Office
PO Box 92146
Tillicum, WA 98492-0146

27. PAYMENT WILL BE MADE BY

US Army Corps of Engineers Finance Center
CEFC-AO-P
5722 Integrity Drive
Millington, TN 38054-5005

CONTRACTING OFFICER WILL COMPLETE ITEM 28 OR 29 AS APPLICABLE

☐ **28. NEGOTIATED AGREEMENT** *(Contractor is required to sign this document and return _____ copies to the issuing office.)* Contractor agrees to furnish and deliver all items or perform all work requirements identified on this form and any continuation sheets for the consideration stated in this contract. The rights and obligations of the parties to this contract shall be governed by (a) this contract award, (b) the solicitation, and (c) the clauses, representations, certifications, and specifications incorporated by reference in or attached to this contract.

☒ **29. AWARD.** *(Contractor is not required to sign this document.)* Your offer on this solicitation is hereby accepted as to the items listed. This award consummates the contract, which consists of (a) the Government solicitation and your offer, and (b) this contract award. No further contractual document is necessary.

30A. NAME AND TITLE OF CONTRACTOR OR PERSON AUTHORIZED TO SIGN *(Type or print)*

30B. SIGNATURE

30C. DATE

31A. NAME OF CONTRACTING OFFICER *(Type or print)*

CHERYL A. ANDERSON

31B. UNITED STATES OF AMERICA
BY Cheryl A. Anderson

31C. AWARD DATE

23 Dec 99

STANDARD FORM 1442 BACK (REV. 4-85)

ALTERATIONS IN CONTRACT

DACA67-00-C-0202
(FAR 52.252-4) (APR 1984)

PORTIONS OF THE CONTRACT ARE ALTERED AS FOLLOWS:

The approved subcontract plan, dated 17 December 1999 is hereby incorporated as pages 00010-5 through 00010-10.

ACCOUNTING AND APPROPRIATION DATA:

MCA
21 NA 2000 2050.0000 G3 2000 08 8082 10418450000 35026 3200 0028PP $4,270,910

21 NA 2000 2050.0000 G3 2000 08 8082 10418450000 35026 3200 0028PP $1,017,861

21 NA 2000 2050.0000 G3 2000 08 8082 10418450000 35026 3200 0028PP $ 25,000

21 NA 2000 2050.0000 G3 2000 08 8082 10418450000 35026 3200 0028PP $ 60,000

21 NA 2000 2050.0000 G3 2000 08 8082 10418450000 35026 3200 0028PP $ 12,000

OMA
21 NA 2000 2050.0000 G3 2000 08 8082 70000000000 35026 3200 002ZNM $ 1,120

This page intentionally blank

CONTRACT NUMBER: DACA67-00-C-0202

IF THE CONTRACTOR IS A CORPORATION OR PARTNERSHIP, THE **APPLICABLE PORTION** OF THE FORM LISTED BELOW MUST BE COMPLETED. IN THE ALTERNATIVE, OTHER EVIDENCE MUST BE SUBMITTED TO SUBSTANTIATE THE AUTHORITY OF THE PERSON SIGNING THE CONTRACT. IF A CORPORATION, **THE SAME OFFICER SHALL NOT EXECUTE BOTH THE CONTRACT AND THE CERTIFICATE.**

CORPORATE CERTIFICATE

I, Gloria I. Jermundson, certify that I am the _____ Secretary of the Corporation named as Contractor herein; that Patricia A. Candiotta, who signed this contract on behalf of the Contractor was then President of said corporation; that said contract was duly signed for and on behalf of said corporation by authority of its governing body and is within the scope of its corporate powers.

Gloria I. Jermundson
Gloria I. Jermundson (CORPORATE
(Secretary) SEAL)

AUTHORITY TO BIND PARTNERSHIP

This is to certify that the names, signatures and Social Security Numbers of all partners are listed below and that the person signing the contract has authority actually to bind the partnership pursuant to its partnership agreements. Each of the partners individually has full authority to enter into and execute contractual instruments on behalf of said partnership with the United States of America, except as follows: (state "none" or describe limitations, if any) _____

This authority shall remain in full force and effect until such time as the revocation of authority by any cause whatsoever has been furnished in writing to, and acknowledged by, the Contracting Officer.

(Names, Signatures and Social Security Numbers of all Partners)

NAME	SIGNATURE	SOCIAL SECURITY NO.

_____

This page intentionally blank

SCHEDULE

Item No.	Description of Item	Quantity	Unit	Unit Price	Amount
	BASE ITEMS				
0001	All Work for Athletic Complex Within the Line 1.5 Meters Outside the Building Wall Lines, Except for Base Items Nos. 0003 through 0007	1	Job	LS	$ 4,270,910.
0002	Sitework and Utilities Beyond the Line 1.5 Meters Outside the Building Wall Lines	1	Job	LS	PAC 1,017,861. ~~$ [illegible]~~
0003	DELETED ~~Intrusion Detection System~~	~~1~~	~~Job~~	~~LS~~	~~$~~
0004	Fire Extinguishers	1	Job	LS	$ 1,120.
0005	All Work for As-Built Drawings in Electronic Format as Specified, from Preparation to Final Submittal	1	JOB	L.S.	$25,000
0006	All Work for O&M Manuals, as Specified, from Preparation to Final Submittal	1	JOB	L.S.	$60,000
0007	All Work for 1354 Data/ Installed Equipment List, as Specified, from Preparation to Final Submittal	1	JOB	L.S.	$12,000
		TOTAL BASE ITEMS			PAC ~~$ [illegible]~~ $ 5,386,891.

NOTE: 1. The dollar amounts established for Items 0005, 0006 and 0007 shall not be revised by the bidder.
2. No partial or total payment will be made for Items 0005, 0006 and 0007, until the as-built drawings, the O&M Manuals, and the 1354 Data/ Installed Equipment List are fully approved (A or B action).

This page intentionally blank

PEASE CONSTRUCTION, INC.
SMALL, SMALL DISADVANTAGED AND WOMEN-OWNED SMALL BUSINESS SUBCONTRACTING PLAN

DATE: 12/17/99

CONTRACTOR: Pease Construction, Inc.

ADDRESS: PO Box 98046

PHONE NO: (253) 584-6606

PROJECT TITLE: Athletic Complex, North Ft. Lewis, WA

SOLICITATION NO: DACA67-00-B-0003

1. In accordance with the contract clauses at 52.219-8 and 52.219-9, Pease Construction, Inc. submits the following Subcontracting Plan for Small, Small Disadvantaged, and Women-owned Business Concerns.

2. Corresponding dollar values for percentages cited in para. 3:

a. Total contract amount is $ 5,386,891

b. Total dollars planned to be subcontracted (to all types of businesses): $ 3,770,824

c. Total dollars planned to be subcontracted to small business concerns including 2d, 2e, and 2f below): $ 2,828,118

d. Total dollars planned to be subcontracted to HUBZone small business: $ 37,708

e. Total dollars planned to be subcontracted to small disadvantaged business concerns: $ 358,228

f. Total dollars planned to be subcontracted to small woman-owned business concerns: $ 188,541

3. The following percentage goals are applicable to the contract awarded under the solicitation cited above.

a. The total estimated percentage of all planned subcontracting to all types

of business concerns under this contract is (2b divided by 2a): 70 %

b. Small Business Concerns (2c divided by 2b): 75 % of total planned subcontracting dollars under this contract will go to subcontractors who are small business concerns including 3c. and 3d.

c. Small HUBZone Business Concerns (2d divided by 2b): 1 % of total planned Subcontracting dollars under this contract will go to subcontractors who are HUBZone small business contractors.

d. Small Disadvantaged Business Concerns (2e divided by 2b): 9.5 % of total planned subcontracting dollars under this contract will go to subcontractors who are small disadvantaged individuals. Women-owned businesses have not been considered as a small disadvantaged business and will not be included in subsequent subcontract awards to women-owned businesses in our calculations for paragraph 3c unless the firm meets the definition of a small disadvantaged business.

e. Small Woman-Owned Business Concerns (2f divided by 2b): 5 % of total planned subcontracting dollars under this contract will go to subcontractors who are small woman-owned businesses.

4. The principal items or areas we will subcontract under this contract are:

Excavation, masonry, concrete finishing, reinforcing steel, steel decking, miscellaneous metals, doors & frames, aluminum storefronts & windows, glass & glazing, skylights, flooring GWB, painting, specialty equipment, cabinetry, asbestos abatement, fire protection, mechanical and partial electrical.

a. Of the items or areas stated in 4; the following are planned to be subcontracted to Small Businesses:

All of the above

b. Of the items or areas stated in 4.a; the following are planned to be subcontracted to HUBZone small business concerns:

Miscellaneous supplies and services

c. Of the items or areas stated in 4.a; the following are planned to be subcontracted to Small Disadvantaged Businesses:

Glass & glazing, aluminum storefronts & windows, skylights, concrete finishes, surveying

d. Of the items or areas stated in 4.a.; the following are planned to be subcontracted to Small Women-Owned Businesses:

Mechanical work, rebar installation

5. Description of the method being used to develop the subcontracting goals in paragraph 2:

Pease Construction has obligated ourselves to providing women-owned and disadavantaged businesses assistance through a *mentoring* program of our own. Through this program we specifically solicit bids from several small women-owned businesses and minority-owned businesses, most of which with we have developed on-going relationships. We continue providing necessary assistance to those subcontractors throughout the duration of the contract. We have attended yearly partnering trade shows, have volunteered as a panel member for a subcontracting seminar promoting the small business community, and have spoken at a King County Council Public Hearing in order to testify as to what steps should be made by contractors in promoting minorities in business. We have written numerous letters to small disadvantaged businesses to encourage and offer assistance in getting certified as an SDB and have educated ourselves and these subcontractors in updating themselves on Pro-Net. We offer assistance in paperwork, work out special payment programs, etc. Our belief is that providing continuity throughout the contract process establishes stable subcontractors and therefore stronger members of our working team. This has proved to be mutually beneficial.

We have added to our list of Small, Small Disadvantaged and Women Owned Businesses by using AGC, CMD, and Construction Data and News as resources. Additionally we have solicited HUBZone small businesses that are listed under the HUBZone certification listing under the ProNet web site and now maintain a current listing of those businesses in our office. We establish contact by methods of both telephone solicitation and written invitations to bid. We also maintain folders with copies of the unsolicitated sub bids for future contacts.

6. Indirect costs were ☐ were not ☒ used in establishing subcontracting goals. **If indirect costs are included in your goals, furnish a description of the method used to determine the proportionate share of indirect costs to be incurred with (i) small business concerns (ii) small disadvantaged business concerns and (iii) women-owned.**

7. The following individual will administer this Subcontracting Plan on behalf of Pease Construction, Inc.:

Name: Lori S. Wehmhoefer Job Title: Small Business Advocate

Address and Telephone Number: P.O. Box 98046, Lakewood, WA 98498 (253) 584-6606

This individual's specific duties with regard to the conduct of our firm's Subcontracting Plan will include, but will not be limited to, the following:

a. Developing and maintaining bidders lists of small, small disadvantaged and women-owned small business concerns, and HUBzone small businesses using sources such as the Small Business Administration's ProNet, Washington State Office of Minority and Women-owned Business Enterprises, Minority Business Development Agency, US Department of Commerce, Local Minority Business Development Centers, Economic Development Centers, and National Center for American Indian Enterprise Development.

b. Assuring the inclusion of small, small disadvantaged, women-owned small business concerns and HUBzone small businesses in all solicitations for products or services which they are capable of providing; and ensuring that all solicitations are structured to permit the maximum possible participation by small, small disadvantaged and women-owned small business concerns.

c. Establishing and maintaining records of all solicitations and subcontract awards to ensure that the members of the firm who review bidders proposals documents their reasons for selecting or not selecting a bid submitted by a small, small disadvantaged, women-owned small business concerns and HUBZone small businesses, and monitoring the firm's progress towards achievement of its percentage goals.

d. Preparing and submitting the Subcontracting Report for Individual Contracts (SF 294) and the Summary Subcontract Report (SF 295) in accordance with instructions provided, and coordinating and preparing for all compliance reviews by Federal agencies.

e. Conducting or arranging for all other activities necessary to further the intent and attainment of the goals in the Plan to include motivational training of the firm's purchasing personnel, attendance at workshops, seminars and trade fairs conducted by or on behalf of small business concerns; and general cooperation with members of the small, small disadvantaged, women-owned small business concerns, and HUBZone small businesses or their representatives.

8. The following steps will be taken to ensure that small, small disadvantaged, women-owned small business and HUBzone small business concerns receive notice of and have an equitable opportunity to compete for intended awards of subcontracts and/or purchase orders for the products and/or services described in paragraph 4 above:

a. Sources will be requested through SBA's ProNet system, business development organizations, minority and small business trade associations and at small, minority and women-owned small business procurement conferences; sources will be contacted; and bidding materials will be provided to all responding parties expressing an interest.

b. Internally, motivational training will be conducted to guide and encourage purchasing personnel to use source lists and guides to small, small disadvantaged, women-owned small business concerns and HUBZone small businesses. Lists will be maintained and utilized by purchasing personnel while soliciting subcontracts and purchase orders and activities will be monitored to ensure sufficient time is allowed for interested bidders to prepare their proposals and to evaluate continuing compliance with the Subcontracting Plan.

9. Pease Construction, Inc. agrees that the clause entitled "Utilization of Small, Small Disadvantaged and Women-Owned Business Concerns" will be included in all subcontracts that offer further subcontracting opportunities. All subcontractors, except small business concerns, who receive subcontracts in excess of $1,000,000 will be required to adopt a plan similar to this one. Such plans will be reviewed to assure that all minimum requirements of an acceptable subcontracting plan have been satisfied.

The acceptability of percentage goals shall be determined on a case-by-case basis depending on the supplies/services involved, the availability of potential small, small disadvantaged, women-owned, HUBZone subcontractors, and prior experience. Once approved and implemented, plans will be monitored through the submission of periodic visits to subcontractors facilities to review applicable records and subcontracting program progress.

10. Pease Construction, Inc. agrees to submit such periodic reports and cooperate in any studies or surveys as may be required by the Contracting agency or Small Business Administration in order to determine the extent of compliance by the offeror with the subcontracting plan and with the clause entitled "Utilization of Small Business Concerns" contained in the contract.

11. Pease Construction, Inc. agrees to maintain at least the following types of records to document compliance with the Subcontracting Plan:

a. The names of all organizations, agencies, and associations contacted for small, small disadvantaged, women-owned small business and HUBZone small business sources, along with records of attendance at conferences, seminars and trade fairs where additional sources were developed.

b. Source lists, guides, and other data identifying small, small disadvantaged, women-owned small business and HUBZone small business subcontractors and vendors.

c. Records of all subcontract solicitations resulting in an award of more than $1,000,000, on a contract-by-contract basis, indicating (1) whether small business concerns were solicited,

and if not, why not; (2) whether HUBZone small businesses were solicited, and if not, why not; (3) whether small disadvantaged business concerns were solicited, and if not, why not; (4) whether small women-owned business concerns were solicited, and if not, why not; and (5) reasons for the failure of solicited small, small disadvantaged, women-owned small business concerns or HUBZone small business to receive a subcontract award.

d. Records of all subcontract award data to include subcontractor's name and address, to be kept on a contract-by-contract basis.

e. Minutes of internal motivational and training meetings held for the guidance and encouragement of purchasing personnel, and records of all monitoring activities performed for compliance evaluation.

f. Copies of SF 294 and SF 295 showing date and place of filing and copies of all other reports of results of reviews conducted by the contracting agency or other interested agencies of the Federal government to monitor our compliance with this Subcontracting Plan.

12. Pease Construction, Inc. will submit an SF 295, Summary Subcontract Report, on Corps of Engineers projects only. The SF 295 shall be completed and distributed in accordance with the Corps of Engineers Supplemental Instructions. Pease Construction, Inc. will not report Corps of Engineers projects through any other agency unless authorized by the Contracting Officer.

13. In closing, Pease Construction, Inc. states that it will be the policy of Pease Construction, Inc. to afford every practicable opportunity for small, small disadvantaged, women-owned small business concerns and HUBZone small business concerns to participate in contracts awarded to Pease Construction, Inc. by the Federal Government. It is further our policy to ensure that equitable opportunity is provided to small, small disadvantaged, women-owned small business concerns and HUBZone small business concerns to compete for award of subcontracts and purchase orders, and to diligently pursue the achievement of our goals of participation by small, small disadvantaged, and women-owned small businesses in the dollars available for subcontract/purchase order awards under this contract. We feel that our program has been one of high success and is evidenced by our past performance. We have not only attained the goals that we have set, but, in some cases have exceeded them (see attached).

By: Pease Construction, Inc.

Patricia A. Candiotta, President

Date: 12/17/99

FROM: Department of the Army
Seattle District, Corps of Engineers
P.O.BOX 3755
SEATTLE, WA 98124-3755
CENWS-CT-CB-MU (LORRAINE KUNIYUKI - (206) 764-6805)

1. Refer to Invitation for Bid DACA67-00-B-0003, Athletic Complex, North Fort Lewis, WA, dated 15 October 1999. This is Amendment Number Eight (0008), dated 8 December 1999, which provides for the following:

   THE BID OPENING ROOM HAS BEEN CHANGED TO THE FORT LEWIS CONFERENCE ROOM, 4735 EAST MARGINAL WAY S. (2nd floor), SEATTLE, WA 98134-2385.

2. The bid opening time and date remain unchanged at 2:00 P.M. LOCAL TIME, 14 December1999.

3. NOTICE TO BIDDERS: Bidders must acknowledge receipt of this amendment by number and date on Standard Form 1442 BACK, in Block 19, or by telegram. Please mark the outside of the envelope in which the bid is enclosed to show the amendment received.

4. No confirmation copy will be mailed.

This page intentionally blank

FROM: US ARMY ENGR DIST, SEATTLE
PO BOX 3755
SEATTLE, WA. 98124-2255

1. Refer to Invitation for Bids DACA67-00-B-0003 Dated 15 October 99, entitled Athletic Complex, North Fort Lewis, WA.

2. This is amendment No. 0007 (seven) which provides for the following:

a. Drawings:

Plate L1.1: Add callout to rectangular area (2.5M x 10.25M, approx.) between parking lot on South Side of Athletic Complex and the concrete pad in front of the mechanical room doors to be "Grass Pavers, see PL C1.4 and Detail 7, PL L1.4".

Plate A1.6 - Make window W3 Mullion detail to be similar to detail 10/A5.2.

Plate A2.1, Detail 1: In the callout "Pre-cast concrete sign" replace the words "pre-cast conc. Sign" with words: "Steel plate as specified, attached with stainless steel screws or epoxy."

Plate A2.2, Detail 1: In the callout "Pre-cast concrete sign" replace the words "pre-cast conc. Sign" with words: Steel plate as specified, attached with stainless steel screws or epoxy."

Plate A5.2 - Make all P.T. Wood blocking to be 38 mm x 148 mm.

Plate E2.1 - In callouts "Concrete Encased Ductbank", revise 2800 pair and 3200 pair telephone cables from No. 24 AWG to No. 26 AWG." To "notes" add Note 12: "Pairs per cable may be adjusted as long as total number of pairs is 6000."

Plate E2.1 - Replace Note 3 with the following: "Replace in-place existing telephone manhole. Set with lid toward building. Hot splice existing 1800 pair conductors to new pairs. Leave unused pairs in splice closures. Route new telephone cables back to RSU, see plates E2.2 and E2.3. Take ductbank across C Street using existing sleeves installed by others."

Plate E4.6 - To Detail 7 add the following as Note 2: "Tray shall be galvanized steel with no less than 300mm radius."

Plate S1.1: In "METAL BUILDING SYSTEM", in second paragraph, replace the last line with the following:

". . . to H/300 for building main framing, and to L/600 for secondary members, supporting the brick veneer. These are minimum requirements. If industry standards are more restrictive, the stricter requirements shall govern."

Plate S1.1: Add the following note below:

"ROOF DECKING" and "FLOOR DECKING" paragraphs.

"NOTE: Screws may be used per manufacturer's recommendations as an alternative to welding, provided test results are submitted showing adequate shear, pull-out, and pull-over capacities."

b. Specifications

Section 08950 - Engineered Translucent Skylight and Wall Systems:

Paragraph 2.1: Revise the entire paragraph to read: "The Contractor shall use services of a registered structural engineer to design the steel support members for the translucent panel system and for doors and windows in coordination with the metal building supplier and in accordance with the following: The framing structure shall be fabricated of extruded aluminum using alloy 6063 T5 or 6061 T6 as required for design loads, and of steel tubing, as suggested on the drawings. Exposed aluminum surfaces shall have the manufacturer's standard polyvinylidene fluoride (PVDF) 70 percent finish. Color shall be as indicated on the drawings."

Paragraph 2.2.4: On second line, delete words "6.35mm thick and" and "tempered panel". On third line, delete words "6.35 mm thick minimum" and "laminated glass".

Paragraph 2.3.1: On first line delete word "tube"; on third line delete words "tube for the"

Paragraph 2.8: Delete entire paragraph.

Section 13120 - Standard Metal Building System.

Paragraph 1.2.2.3: On third line, after the words ". . . during construction, . . . " revise the rest of the sentence to read:

". . . at the start and completion of the structural framing erection, at the completion of the installation of the exterior covering, and at any critical/problem phase to assure that the building is erected properly."

Paragraph 1.3.12: Delete the entire paragraph.

3. Bid Opening time and date of 2:00 P.M., Local time, 14 December, 1999 remains unchanged.

4. NOTICE TO BIDDERS: Bidders must acknowledge receipt of this amendment by number and date on bid or by telegram. Please mark outside of envelope in which bid is enclosed to show amendment received.

This page intentionally blank

FROM: DEPARTMENT OF THE ARMY
SEATTLE DISTRICT, CORPS OF ENGINEERS
P.O.BOX 3755
SEATTLE, WA 98124-3755
CENWS-CT-CB-MU (LORRAINE KUNIYUKI - (206) 764-6805)

1. Refer to Invitation for Bid DACA67-00-B-0003, Athletic Complex, North Fort Lewis, WA, dated 15 October 1999. This is amendment Number Six (0006), dated 3 December 1999, which provides for the following:

   THE BID OPENING DATE HAS BEEN CHANGED TO 14 DECEMBER 1999 AT 2:00 P.M. LOCAL TIME, THE PRESTON ROOM.

2. NOTICE TO BIDDERS: Bidders must acknowledge receipt of this amendment by number and date on Standard Form 1442 BACK, in Block 19, or by telegram. Please mark the outside of the envelope in which the bid is enclosed to show the amendment received.

3. No confirmation copy will be mailed.

4. Amendment No. Seven (0007) is forthcoming with technical changes.

This page intentionally blank

FROM: DEPARTMENT OF THE ARMY
SEATTLE DISTRICT, CORPS OF ENGINEERS
P.O.BOX 3755
SEATTLE, WA 98124-3755
CENWS-CT-CB-MU (LORRAINE KUNIYUKI - (206) 764-6805)

1. Refer to Invitation for Bid DACA67-00-B-0003, Athletic Complex, North Fort Lewis, WA, dated 15 October 1999. This is **Amendment Number Five (0005)**, dated 24 November 1999, which provides for the following:

   THE BID OPENING DATE HAS BEEN CHANGED TO 9 DECEMBER 1999 AT 2:00 P.M. LOCAL TIME. THE BID OPENING ROOM HAS BEEN CHANGED TO THE PRESTON ROOM.

2. NOTICE TO BIDDERS: Bidders must acknowledge receipt of this amendment by number and date on Standard Form 1442 BACK, in Block 19, or by telegram. Please mark the outside of the envelope in which the bid is enclosed to show the amendment received.

3. No confirmation copy will be mailed.

4. **Amendment No. Four (0004) is forthcoming with technical changes.**

This page intentionally blank

AMENDMENT OF SOLICITATION/MODIFICATION OF CONTRACT

1. CONTRACT ID CODE	PAGE OF PAGES
	1 2

2. AMENDMENT/MODIFICATION NO.	3. EFFECTIVE DATE	4. REQUISITION/PURCHASE REQ. NO.	5. PROJECT NO. (If applicable)
0004	11/29/99	W68MD9-9236-6498	PN 41845

6. ISSUED BY	CODE	7. ADMINISTERED BY (If other than Item 6)	CODE
SEATTLE DIST, CORPS OF ENGRS PO BOX 3755 SEATTLE WA 98124-3755 Lorraine Kuniyuki C06(206) 764-6805	DACA67	SEE BLOCK 6	ADMIN

8. NAME AND ADDRESS OF CONTRACTOR (No., street, county, State and ZIP Code) Vendor ID: 00000000	(X)	9A. AMENDMENT OF SOLICITATION NO.
	X	DACA67-00-B-0003
		9B. DATED (SEE ITEM 11) 10/18/99
		10A. MODIFICATION OF CONTRACT/ORDER NO.
		10B. DATED (SEE ITEM 13)
CODE 00000 FACILITY CODE		

11. THIS ITEM ONLY APPLIES TO AMENDMENTS OF SOLICITATIONS

☒ The above numbered solicitation is amended as set forth in Item 14. The hour and date specified for receipt of Offers ☐ is extended, ☒ is not extended.
Offers must acknowledge receipt of this amendment prior to the hour and date specified in the solicitation or as amended, by one of the following methods: (a) By completing Items 8 and 15, and returning _____ copies of the amendment; (b) By acknowledging receipt of this amendment on each copy of the offer submitted; or (c) By separate letter or telegram which includes a reference to the solicitation and amendment numbers. FAILURE OF YOUR ACKNOWLEDGMENT TO BE RECEIVED AT THE PLACE DESIGNATED FOR THE RECEIPT OF OFFERS PRIOR TO THE HOUR AND DATE SPECIFIED MAY RESULT IN REJECTION OF YOUR OFFER. If by virtue of this amendment you desire to change an offer already submitted, such change may be made by telegram or letter, provided each telegram or letter makes reference to the solicitation and this amendment, and is received prior to the opening hour and date specified.

12. ACCOUNTING AND APPROPRIATION DATA (If required)

13. THIS ITEM APPLIES ONLY TO MODIFICATIONS OF CONTRACTS/ORDERS, IT MODIFIES THE CONTRACT/ORDER NO. AS DESCRIBED IN ITEM 14.

(X)	
	A. THIS CHANGE ORDER IS ISSUED PURSUANT TO: (Specify authority) THE CHANGES SET FORTH IN ITEM 14 ARE MADE IN THE CONTRACT ORDER NO. IN ITEM 10A.
	B. THE ABOVE NUMBERED CONTRACT/ORDER IS MODIFIED TO REFLECT THE ADMINISTRATIVE CHANGES (such as changes in paying office, appropriation date, etc.) SET FORTH IN ITEM 14, PURSUANT TO THE AUTHORITY OF FAR 43.103 (b).
	C. THIS SUPPLEMENTAL AGREEMENT IS ENTERED INTO PURSUANT TO AUTHORITY OF:
	D. OTHER (Specify type of modification and authority)

E. IMPORTANT: Contractor ☐ is not, ☐ is required to sign this document and return _____ copies to the issuing office.

14. DESCRIPTION OF AMENDMENT/MODIFICATION (Organized by UCF section headings, including solicitation/contract subject matter where feasible.)

Solicitation No. DACA67-00-B-0003
Project: Athletic Complex, North Fort Lewis, WA
Technical POC: Hugh Markey
Internet Address: hugh.f.markey@usace.army.mil
Phone: (206) 764-6593

Except as provided herein, all terms and conditions of the document referenced in Item 9A or 10A, as heretofore changed, remains unchanged and in full force and effect.

15A. NAME AND TITLE OF SIGNER (Type or print)		16A. NAME AND TITLE OF CONTRACTING OFFICER (Type or print)	
15B. CONTRACTOR/OFFEROR (Signature of person authorized to sign)	15C. DATE SIGNED	16B. UNITED STATES OF AMERICA BY (Signature of Contracting Officer)	16C. DATE SIGNED

A. This amendment 0004 provides for the following changes:

1. Modifications to drawings Plates A1.7, A2.4, A3.2, A4.2, A5.5, E3.1, E3.2, E3.3, E3.4, E3.8, E4.1, E4.3, E4.6, and E4.15 by notation and sketches in the specifications (See the attached Section 00800 - Special Clauses, following the Index of Drawings).

2. Revisions and minor clarifications to specifications Sections 09510, 15569, 16415, and 16770. The entire revised specifications are issued by this amendment.

B. The attached revised specifications supercede the existing specifications.

c. THE BID OPENING TIME AND DATE REMAIN UNCHANGED AT 2:00 P.M. LOCAL TIME, 9 DECEMBER 1999, PRESTON ROOM. (Ref. Telegraphic Amendment 0005, dated 24 November 1999).

D. NOTICE TO BIDDERS: Bidders must acknolwedge receipt of this amendment by number and ate on page 00010-2, in Block 19, or by telegram. Please mark the outside of the envelope containing the bid to show amendments received.

Attachments:

SECTIONS: 00800
09510
15569
16415
16770

FROM: DEPARTMENT OF THE ARMY
SEATTLE DISTRICT, CORPS OF ENGINEERS
P.O.BOX 3755
SEATTLE, WA 98124-3755
CENWS-CT-CB-MU (LORRAINE KUNIYUKI - (206) 764-6805)

1. Refer to Invitation for Bid DACA67-00-B-0003, Athletic Complex, North Fort Lewis, WA, dated 15 October 1999. This is amendment Number **Three (0003),** dated 12 November 1999, which provides for the following:

THE BID OPENING DATE HAS BEEN CHANGED TO **30 NOVEMBER 1999 AT 2:00 P.M. LOCAL TIME.** THE BID OPENING ROOM HAS BEEN CHANGED TO THE EMERGENCY OPERATIONS CONFERENCE ROOM, 4735 EAST MARGINAL WAY S. (2nd floor), SEATTLE, WA 98134-2385.

2. NOTICE TO BIDDERS: Bidders must acknowledge receipt of this amendment by number and date on Standard Form 1442 BACK, in Block 19, or by telegram. Please mark the outside of the envelope in which the bid is enclosed to show the amendment received.

3. No confirmation copy will be mailed.

4. **Amendment No. Two (0002) is forthcoming with technical changes.**

This page intentionally blank

AMENDMENT OF SOLICITATION/MODIFICATION OF CONTRACT

1. CONTRACT ID CODE	PAGE OF PAGES
	1 3

2. AMENDMENT/MODIFICATION NO.	3. EFFECTIVE DATE	4. REQUISITION/PURCHASE REQ. NO.	5. PROJECT NO. (If applicable)
0002	11/18/99	W68MD9-9236-6498	PN 41845

6. ISSUED BY CODE DACA67

SEATTLE DIST, CORPS OF ENGRS
PO BOX 3755
SEATTLE WA 98124-3755

Lorraine Kuniyuki C06(206) 764-6805

7. ADMINISTERED BY (If other than Item 6) CODE ADMIN

SEE BLOCK 6

8. NAME AND ADDRESS OF CONTRACTOR (No., street, county, State and ZIP Code) Vendor ID: 00000000

CODE 00000 FACILITY CODE

(X) X

9A. AMENDMENT OF SOLICITATION NO.
DACA67-00-B-0003

9B. DATED (SEE ITEM 11)
10/18/99

10A. MODIFICATION OF CONTRACT/ORDER NO.

10B. DATED (SEE ITEM 13)

11. THIS ITEM ONLY APPLIES TO AMENDMENTS OF SOLICITATIONS

☒ The above numbered solicitation is amended as set forth in Item 14. The hour and date specified for receipt of Offers ☐ is extended, ☒ is not extended.
Offers must acknowledge receipt of this amendment prior to the hour and date specified in the solicitation or as amended, by one of the following methods: (a) By completing Items 8 and 15, and returning _____ copies of the amendment; (b) By acknowledging receipt of this amendment on each copy of the offer submitted; or (c) By separate letter or telegram which includes a reference to the solicitation and amendment numbers. FAILURE OF YOUR ACKNOWLEDGMENT TO BE RECEIVED AT THE PLACE DESIGNATED FOR THE RECEIPT OF OFFERS PRIOR TO THE HOUR AND DATE SPECIFIED MAY RESULT IN REJECTION OF YOUR OFFER. If by virtue of this amendment you desire to change an offer already submitted, such change may be made by telegram or letter, provided each telegram or letter makes reference to the solicitation and this amendment, and is received prior to the opening hour and date specified.

12. ACCOUNTING AND APPROPRIATION DATA (If required)

13. THIS ITEM APPLIES ONLY TO MODIFICATIONS OF CONTRACTS/ORDERS, IT MODIFIES THE CONTRACT/ORDER NO. AS DESCRIBED IN ITEM 14.

(X)	A. THIS CHANGE ORDER IS ISSUED PURSUANT TO: (Specify authority) THE CHANGES SET FORTH IN ITEM 14 ARE MADE IN THE CONTRACT ORDER NO. IN ITEM 10A.
	B. THE ABOVE NUMBERED CONTRACT/ORDER IS MODIFIED TO REFLECT THE ADMINISTRATIVE CHANGES (such as changes in paying office, appropriation date, etc.) SET FORTH IN ITEM 14, PURSUANT TO THE AUTHORITY OF FAR 43.103 (b).
	C. THIS SUPPLEMENTAL AGREEMENT IS ENTERED INTO PURSUANT TO AUTHORITY OF:
	D. OTHER (Specify type of modification and authority)

E. IMPORTANT: Contractor ☐ is not, ☐ is required to sign this document and return _____ copies to the issuing office.

14. DESCRIPTION OF AMENDMENT/MODIFICATION (Organized by UCF section headings, including solicitation/contract subject matter where feasible.)

Solicitation No. DACA67-00-B-0003
Project: Athletic Complex, North Fort Lewis, WA
Technical POC: Hugh Markey
Internet Address: hugh.f.markey@usace.army.mil
Phone: (206) 764-6593

Except as provided herein, all terms and conditions of the document referenced in Item 9A or 10A, as heretofore changed, remains unchanged and in full force and effect.

15A. NAME AND TITLE OF SIGNER (Type or print)		16A. NAME AND TITLE OF CONTRACTING OFFICER (Type or print)	
15B. CONTRACTOR/OFFEROR (Signature of person authorized to sign)	15C. DATE SIGNED	16B. UNITED STATES OF AMERICA BY (Signature of Contracting Officer)	16C. DATE SIGNED

A. This amendment 0002 provides for the following changes:

1. Revision to the Schedule, page 00010-4, deleting Item 0003.

2. Revision to the Table of Contents for Technical Specifications, deleting Section 07110 Bituminous Dampproofing in its entirety, and adding Section 09650 Resilient Flooring.

3. Revision to Specification Sections 00800, 01025, 04200, 05500, 06200, 07110 (Deletion Note), 08950, 09640, 09650 (Added Section), 10800, 13052, 13120, 15951. The attached revised specifications replace the existing specifications.

4. The following three clauses are deleted by reference:

   FAR 52.225-13 NOTICE OF BUY AMERICAN ACT REQUIREMENT - CONSTRUCTION MATERIALS UNDER TRADE AGREEMENTS ACT AND NORTH AMERICAN FREE TRADE AGREEMENT (MAY 1997)

   FAR 52.225-15 BUY AMERICAN ACT - CONSTRUCTION MATERIALS UNDER TRADE AGREEMENTS ACT AND NORTH AMERICAN FREE TRADE AGREEMENT (JUN 1997)

   FAR 52.225-15 I BUY AMERICAN ACT - CONSTRUCTION MATERIALS UNDER TRADE AGREEMENTS ACT AND NORTH AMERICAN FREE TRADE AGREEMENT (JUNE 1997) ALTERNATE I (MAY 1997)

B. Specification changes are generally identified, for convenience, by strikeouts for deletions, underlining of text for additions, and sidebars to note where changes were made. All portions of the revised or new pages shall apply whether or not changes have been indicated.

C. THE BID OPENING TIME AND DATE REMAIN UNCHANGED AT 2:00 P.M., LOCAL TIME, 30 NOVEMBER 1999. (Ref. Telegraphic Amendment 0003, dated 12 November 1999).

D. NOTICE TO BIDDERS: Bidders must acknowledge receipt of this amendment by number and date on page 00010-2, in Block 19, or by telegram. Please mark the outside of the envelope containing the bid to show amendments received.

Attachments:

Schedule, Page 00010-4
Table of Contents, Pages 01000-TC-1 through 01000-TC-4
SECTIONS:

00800
01025
04200
05500
06200
07110
08950
09640
09650
10800
13052
13120
15951

This page intentionally blank

AMENDMENT OF SOLICITATION/MODIFICATION OF CONTRACT

1. CONTRACT ID CODE	PAGE OF PAGES
	1 2

2. AMENDMENT/MODIFICATION NO.	3. EFFECTIVE DATE	4. REQUISITION/PURCHASE REQ. NO.	5. PROJECT NO. (If applicable)
0001	11/08/99	W68MD9-9236-6498	PN 41845

6. ISSUED BY CODE DACA67

SEATTLE DIST, CORPS OF ENGRS
PO BOX 3755
SEATTLE WA 98124-3755

Lorraine Kuniyuki C06(206) 764-6805

7. ADMINISTERED BY (If other than Item 6) CODE ADMIN

SEE BLOCK 6

8. NAME AND ADDRESS OF CONTRACTOR (No., street, county, State and ZIP Code) Vendor ID: 00000000

CODE 00000 FACILITY CODE

(X) X

9A. AMENDMENT OF SOLICITATION NO. DACA67-00-B-0003

9B. DATED (SEE ITEM 11) 10/18/99

10A. MODIFICATION OF CONTRACT/ORDER NO.

10B. DATED (SEE ITEM 13)

11. THIS ITEM ONLY APPLIES TO AMENDMENTS OF SOLICITATIONS

☒ The above numbered solicitation is amended as set forth in Item 14. The hour and date specified for receipt of Offers ☐ is extended, ☒ is not extended.
Offers must acknowledge receipt of this amendment prior to the hour and date specified in the solicitation or as amended, by one of the following methods: (a) By completing Items 8 and 15, and returning _____ copies of the amendment; (b) By acknowledging receipt of this amendment on each copy of the offer submitted; or (c) By separate letter or telegram which includes a reference to the solicitation and amendment numbers. FAILURE OF YOUR ACKNOWLEDGMENT TO BE RECEIVED AT THE PLACE DESIGNATED FOR THE RECEIPT OF OFFERS PRIOR TO THE HOUR AND DATE SPECIFIED MAY RESULT IN REJECTION OF YOUR OFFER. If by virtue of this amendment you desire to change an offer already submitted, such change may be made by telegram or letter, provided each telegram or letter makes reference to the solicitation and this amendment, and is received prior to the opening hour and date specified.

12. ACCOUNTING AND APPROPRIATION DATA (If required)

13. THIS ITEM APPLIES ONLY TO MODIFICATIONS OF CONTRACTS/ORDERS, IT MODIFIES THE CONTRACT/ORDER NO. AS DESCRIBED IN ITEM 14.

(X)	
	A. THIS CHANGE ORDER IS ISSUED PURSUANT TO: (Specify authority) THE CHANGES SET FORTH IN ITEM 14 ARE MADE IN THE CONTRACT ORDER NO. IN ITEM 10A.
	B. THE ABOVE NUMBERED CONTRACT/ORDER IS MODIFIED TO REFLECT THE ADMINISTRATIVE CHANGES (such as changes in paying office, appropriation date, etc.) SET FORTH IN ITEM 14, PURSUANT TO THE AUTHORITY OF FAR 43.103 (b).
	C. THIS SUPPLEMENTAL AGREEMENT IS ENTERED INTO PURSUANT TO AUTHORITY OF:
	D. OTHER (Specify type of modification and authority)

E. IMPORTANT: Contractor ☐ is not, ☐ is required to sign this document and return _____ copies to the issuing office.

14. DESCRIPTION OF AMENDMENT/MODIFICATION (Organized by UCF section headings, including solicitation/contract subject matter where feasible.)

Solicitation No. DACA67-00-B-0003
Project: Athletic Complex, North Fort Lewis, WA
Technical POC: Hugh Markey
Internet Address: hugh.f.markey@usace.army.mil
Phone: (206) 764-6593

Except as provided herein, all terms and conditions of the document referenced in Item 9A or 10A, as heretofore changed, remains unchanged and in full force and effect.

15A. NAME AND TITLE OF SIGNER (Type or print)		16A. NAME AND TITLE OF CONTRACTING OFFICER (Type or print)	
15B. CONTRACTOR/OFFEROR (Signature of person authorized to sign)	15C. DATE SIGNED	16B. UNITED STATES OF AMERICA BY (Signature of Contracting Officer)	16C. DATE SIGNED

A. This amendment provides for the following changes:

1. The existing General Wage Decision WA990002 is hereby replaced in its entirety by General Wage Decision WA990002, Modification No. 13, dated 5 November 1999.

2. Revised Section 00800, pages 00800-i through 00800-13. The original Section 00800, pages 00800-i through 00800-13, is hereby replaced in its entirety.

B. The attached revised and new specification pages supercede and replace corresponding specification pages and are to be inserted in sequence. Specification changes are generally identified, for convenience, by strikeout for deletions, underlining of text for additions, and sidebars to note where changes were made. All portions of the revised or new pages shall apply whether or not changes have been indicated.

C. Bid opening time and date remain unchanged at 2:00 P.M. LOCAL TIME, 18 November 1999.

D. NOTICE TO BIDDERS: Bidders must acknowledge receipt of this amendment by number and date on Standard Form 1442 BACK, in Block 19, or by telegram. Please mark the outside of the envelope in which the bid is enclosed to show the amendment received.

Attachments:
WA9900002, Mod No. 13
Section 00800

TABLE OF CONTENTS
SECTION 00700
CONTRACT CLAUSES

1	52.252-2	CLAUSES INCORPORATED BY REFERENCE (FEB 1998)
2	52.201-4001	SUCCESSOR CONTRACTING OFFICERS (52.0201-4001)
3	52.201-7000	CONTRACTING OFFICER'S REPRESENTATIVE (DEC 1991)
4	52.202-1 I	DEFINITIONS (OCT 1995)--ALTERNATE I (APR 1984)
5	52.203-3	GRATUITIES (APR 1984)
6	52.203-5	COVENANT AGAINST CONTINGENT FEES (APR 1984)
7	52.203-7	ANTI-KICKBACK PROCEDURES (JUL 1995)
8	52.203-8	CANCELLATION, RESCISSION, AND RECOVERY OF FUNDS FOR ILLEGAL OR IMPROPER ACTIVITY (JAN 1997)
9	52.203-10	PRICE OR FEE ADJUSTMENT FOR ILLEGAL OR IMPROPER ACTIVITY (JAN 1997)
10	52.203-12	LIMITATION ON PAYMENTS TO INFLUENCE CERTAIN FEDERAL TRANSACTIONS (JUN 1997)
11	52.203-7001	PROHIBITION ON PERSONS CONVICTED OF FRAUD OR OTHER DEFENSE-CONTRACT-RELATED FELONIES (MAR 1999)
12	52.203-7002	DISPLAY OF DOD HOTLINE POSTER (DEC 1991)
13	52.204-4	PRINTING/COPYING DOUBLE-SIDED ON RECYCLED PAPER (JUN 1996)
14	52.204-7003	CONTROL OF GOVERNMENT PERSONNEL WORK PRODUCT (APR 1992)
15	52.209-6	PROTECTING THE GOVERNMENT'S INTEREST WHEN SUBCONTRACTING WITH CONTRACTOR DEBARRED, SUSPENDED, OR PROPOSED FOR DEBARMENT (JUL 1995)
16	52.209-7004	SUBCONTRACTING WITH FIRMS THAT ARE OWNED OR CONTROLLED BY THE GOVERNMENT OF A TERRORIST COUNTRY (MAR 1998)
17	52.214-26	AUDIT AND RECORDS--SEALED BIDDING (OCT 1997)
18	52.214-27	PRICE REDUCTION FOR DEFECTIVE COST OR PRICING DATA--MODIFICATIONS--SEALED BIDDING (OCT 1997)
19	52.214-28	SUBCONTRACTOR COST OR PRICING DATA--MODIFICATIONS--SEALED BIDDING (OCT 1997)
20	52.214-29	ORDER OF PRECEDENCE--SEALED BIDDING (JAN 1986)
21	52.219-8	UTILIZATION OF SMALL BUSINESS CONCERNS (OCT 1999)
22	52.219-9 I	SMALL BUSINESS SUBCONTRACTING PLAN (JAN 1999)--ALTERNATE I (JAN 1999)
23	52.219-16	LIQUIDATED DAMAGES--SUBCONTRACTING PLAN (JAN 1999)
24	52.222-4	CONTRACT WORK HOURS AND SAFETY STANDARDS ACT--OVERTIME COMPENSATION (JUL 1995)
25	52.222-6	DAVIS-BACON ACT (FEB 1995)
26	52.222-7	WITHHOLDING OF FUNDS (FEB 1988)
27	52.222-8	PAYROLLS AND BASIC RECORDS (FEB 1988)
28	52.222-9	APPRENTICES AND TRAINEES (FEB 1988)
29	52.222-10	COMPLIANCE WITH COPELAND ACT REQUIREMENTS (FEB 1988)
30	52.222-11	SUBCONTRACTS (LABOR STANDARDS) (FEB 1988)
31	52.222-12	CONTRACT TERMINATION--DEBARMENT (FEB 1988)
32	52.222-13	COMPLIANCE WITH DAVIS-BACON AND RELATED ACT REGULATIONS (FEB 1988)
33	52.222-14	DISPUTES CONCERNING LABOR STANDARDS (FEB 1988)
34	52.222-15	CERTIFICATION OF ELIGIBILITY (FEB 1988)
35	52.222-23	NOTICE OF REQUIREMENT FOR AFFIRMATIVE ACTION TO ENSURE EQUAL EMPLOYMENT OPPORTUNITY FOR CONSTRUCTION (FEB 1999)
36	52.222-26	EQUAL OPPORTUNITY (FEB 1999)
37	52.222-27	AFFIRMATIVE ACTION COMPLIANCE REQUIREMENTS FOR CONSTRUCTION (FEB 1999)
38	52.222-35	AFFIRMATIVE ACTION FOR DISABLED VETERANS AND VETERANS OF THE VIETNAM ERA (APR 1998)
39	52.222-36	AFFIRMATIVE ACTION FOR WORKERS WITH DISABILITIES (JUN 1998)
40	52.222-37	EMPLOYMENT REPORTS ON DISABLED VETERANS AND VETERANS OF THE VIETNAM ERA (JAN 1999)
41	52.223-2	CLEAN AIR AND WATER (APR 1984)
42	52.223-3	HAZARDOUS MATERIAL IDENTIFICATION AND MATERIAL SAFETY DATA (JAN 1997)
43	52.223-6	DRUG-FREE WORKPLACE (JAN 1997)
44	52.223-14	TOXIC CHEMICAL RELEASE REPORTING (OCT 1996)
45	52.223-7001	HAZARD WARNING LABELS (DEC 1991)
46	52.223-7004	DRUG-FREE WORK FORCE (SEP 1988)
47	52.225-5	BUY AMERICAN ACT--CONSTRUCTION MATERIALS (JUN 1997)
48	52.225-11	RESTRICTIONS ON CERTAIN FOREIGN PURCHASES (AUG 1998)
49	52.225-15	BUY AMERICAN ACT--CONSTRUCTION MATERIALS UNDER TRADE AGREEMENTS ACT AND NORTH AMERICAN FREE TRADE AGREEMENT (JUN 1997)
50	52.225-15 I	BUY AMERICAN ACT--CONSTRUCTION MATERIALS UNDER TRADE AGREEMENTS ACT AND NORTH AMERICAN FREE TRADE AGREEMENT (JUN 1997)--ALTERNATE I (MAY 1997)
51	52.226-1	UTILIZATION OF INDIAN ORGANIZATIONS AND INDIAN-OWNED ECONOMIC ENTERPRISE (MAY 1999)

52	52.227-1	AUTHORIZATION AND CONSENT (JUL 1995)
53	52.227-4	PATENT INDEMNITY--CONSTRUCTION CONTRACTS (APR 1984)
54	52.227-7022	GOVERNMENT RIGHTS (UNLIMITED) (MAR 1979)
55	52.227-7023	DRAWINGS AND OTHER DATA TO BECOME PROPERTY OF GOVERNMENT (MAR 1979)
56	52.227-7033	RIGHTS IN SHOP DRAWINGS (APR 1966)
57	52.228-2	ADDITIONAL BOND SECURITY (OCT 1997)
58	52.228-12	PROSPECTIVE SUBCONTRACTOR REQUESTS FOR BONDS (OCT 1995)
59	52.229-3	FEDERAL, STATE, AND LOCAL TAXES (JAN 1991)
60	52.231-7000	SUPPLEMENTAL COST PRINCIPLES (DEC 1991)
61	52.232-5	PAYMENTS UNDER FIXED-PRICE CONSTRUCTION CONTRACTS (MAY 1997)
62	52.232-17	INTEREST (JUN 1996)
63	52.232-18	AVAILABILITY OF FUNDS (APR 1984)
64	52.232-23	ASSIGNMENT OF CLAIMS (JAN 1986)
65	52.232-27	PROMPT PAYMENT FOR CONSTRUCTION CONTRACTS (JUN 1997)
66	52.232-33	PAYMENT BY ELECTRONIC FUNDS TRANSFER--CENTRAL CONTRACTOR REGISTRATION (MAY 1999)
67	52.233-1 I	DISPUTES (OCT 1995)--ALTERNATE I (DEC 1991)
68	52.233-3	PROTEST AFTER AWARD (AUG 1996)
69	52.236-2	DIFFERING SITE CONDITIONS (APR 1984)
70	52.236-3	SITE INVESTIGATION AND CONDITIONS AFFECTING THE WORK (APR 1984)
71	52.236-5	MATERIAL AND WORKMANSHIP (APR 1984)
72	52.236-6	SUPERINTENDENCE BY THE CONTRACTOR (APR 1984)
73	52.236-7	PERMITS AND RESPONSIBILITIES (NOV 1991)
74	52.236-8	OTHER CONTRACTS (APR 1984)
75	52.236-9	PROTECTION OF EXISTING VEGETATION, STRUCTURES, EQUIPMENT, UTILITIES, AND IMPROVEMENTS (APR 1984)
76	52.236-10	OPERATIONS AND STORAGE AREAS (APR 1984)
77	52.236-11	USE AND POSSESSION PRIOR TO COMPLETION (APR 1984)
78	52.236-12	CLEANING UP (APR 1984)
79	52.236-13	ACCIDENT PREVENTION (NOV 1991)
80	52.236-15	SCHEDULES FOR CONSTRUCTION CONTRACTS (APR 1984)
81	52.236-21	SPECIFICATIONS AND DRAWINGS FOR CONSTRUCTION (FEB 1997)
82	52.236-26	PRECONSTRUCTION CONFERENCE (FEB 1995)
83	52.236-7000	MODIFICATION PROPOSALS--PRICE BREAKDOWN (DEC 1991)
84	52.236-7009	OPTION FOR SUPERVISION AND INSPECTION SERVICES (DEC 1991)
85	52.242-13	BANKRUPTCY (JUL 1995)
86	52.242-14	SUSPENSION OF WORK (APR 1984)
87	52.243-4	CHANGES (AUG 1987)
88	52.243-7000	ENGINEERING CHANGE PROPOSALS (SEP 1999)
89	52.243-7001	PRICING OF CONTRACT MODIFICATIONS (DEC 1991)
90	52.244-6	SUBCONTRACTS FOR COMMERCIAL ITEMS AND COMMERCIAL COMPONENTS (OCT 1998)
91	52.246-12	INSPECTION OF CONSTRUCTION (AUG 1996)
92	52.248-3	VALUE ENGINEERING--CONSTRUCTION (MAR 1989)
93	52.248-7000	PREPARATION OF VALUE ENGINEERING CHANGE PROPOSALS (MAY 1994)
94	52.249-2 I	TERMINATION FOR CONVENIENCE OF THE GOVERNMENT (FIXED-PRICE) (SEP 1996)--ALTERNATE I (SEP 1996)
95	52.249-10	DEFAULT (FIXED-PRICE CONSTRUCTION) (APR 1984)
96	52.249-5000	BASIS FOR SETTLEMENT OF PROPOSALS
97	52.252-4	ALTERATIONS IN CONTRACT (APR 1984)
98	52.253-1	COMPUTER GENERATED FORMS (JAN 1991)

SECTION 00700

CONTRACT CLAUSES

1 52.252-2 CLAUSES INCORPORATED BY REFERENCE (FEB 1998)

This contract incorporates one or more clauses by reference, with the same force and effect as if they were given in full text. Upon request, the Contracting Officer will make their full text available. Also, the full text of a clause may be accessed electronically at these addresses:

http://www.arnet.gov/far
http://farsite.hill.af.mil
http://www.dtic.mil/dfars

(End of clause)

2 52.201-4001 SUCCESSOR CONTRACTING OFFICERS (52.0201-4001)

The Contracting Officer who signed this contract is the primary Contracting Officer for the contract. Neverthless, any Contracting Officer assigned to the Seattle District and acting within his/her authority may take formal action on this contract when a contract action needs to be taken and the primary Contracting Officer is unavailable.

3 52.201-7000 CONTRACTING OFFICER'S REPRESENTATIVE (DEC 1991)

(a) Definition. "Contracting officer's representative" means an individual designated in accordance with subsection 201.602-2 of the Defense Federal Acquisition Regulation Supplement and authorized in writing by the Contracting Officer to perform specific technical or administrative functions.

(b) If the Contracting Officer designates a contracting officer's representative (COR), the Contractor will receive a copy of the written designation. It will specify the extent of the COR's authority to act on behalf of the Contracting Officer. The COR is not authorized to make any commitments or changes that will affect price, quality, quantity, delivery, or any other term or condition of the contract.

(End of clause)

4 52.202-1 I DEFINITIONS (OCT 1995)--ALTERNATE I (APR 1984)

(a) "Head of the agency" (also called "agency head") or "Secretary" means the Secretary (or Attorney General, Administrator, Governor, Chairperson, or other chief official, as appropriate) of the agency, including any deputy or assistant chief official of the agency; and the term "authorized representative" means any person, persons, or board (other than the Contracting Officer) authorized to act for the head of the agency or Secretary.

(b) Commercial component means any component that is a commercial item.

(c) Component means any item supplied to the Federal Government as part of an end item or of another component.

(d) Nondevelopmental item means--

(1) Any previously developed item of supply used exclusively for governmental purposes by a Federal agency, a State or local government, or a foreign government with which the United States has a mutual defense

cooperation agreement;

(2) Any item described in paragraph (e)(1) of this definition that requires only minor modification or modifications of a type customarily available in the commercial marketplace in order to meet the requirements of the procuring department or agency; or

(3) Any item of supply being produced that does not meet the requirements of paragraph (e)(1) or (e)(2) solely because the item is not yet in use.

(e) "Contracting Officer" means a person with the authority to enter into, administer, and/or terminate contracts and make related determinations and findings. The term includes certain authorized representatives of the Contracting Officer acting within the limits of their authority as delegated by the Contracting Officer.

(f) Except as otherwise provided in this contract, the term "subcontracts" includes, but is not limited to, purchase orders and changes and modifications to purchase orders under this contract.

(End of clause)

5 52.203-3 GRATUITIES (APR 1984)

(a) The right of the Contractor to proceed may be terminated by written notice if, after notice and hearing, the agency head or a designee determines that the Contractor, its agent, or another representative--

(1) Offered or gave a gratuity (e.g., an entertainment or gift) to an officer, official, or employee of the Government; and

(2) Intended, by the gratuity, to obtain a contract or favorable treatment under a contract.

(b) The facts supporting this determination may be reviewed by any court having lawful jurisdiction.

(c) If this contract is terminated under paragraph (a) above, the Government is entitled--

(1) To pursue the same remedies as in a breach of the contract; and

(2) In addition to any other damages provided by law, to exemplary damages of not less than 3 nor more than 10 times the cost incurred by the Contractor in giving gratuities to the person concerned, as determined by the agency head or a designee. (This subparagraph (c)(2) is applicable only if this contract uses money appropriated to the Department of Defense.)

(d) The rights and remedies of the Government provided in this clause shall not be exclusive and are in addition to any other rights and remedies provided by law or under this contract.

(End of clause)

(R 7-104.16 1952 MAR)

6 52.203-5 COVENANT AGAINST CONTINGENT FEES (APR 1984)

(a) The Contractor warrants that no person or agency has been employed or retained to solicit or obtain this contract upon an agreement or understanding for a contingent fee, except a bona fide employee or agency. For breach or violation of this warranty, the Government shall have the right to annul this contract without liability or, in its discretion, to deduct from the contract price or consideration, or otherwise recover, the full amount of the contingent fee.

(b) "Bona fide agency," as used in this clause, means an established commercial or selling agency, maintained by a contractor for the purpose

of securing business, that neither exerts nor proposes to exert improper influence to solicit or obtain Government contracts nor holds itself out as being able to obtain any Government contract or contracts through improper influence.

"Bona fide employee," as used in this clause, means a person, employed by a Contractor and subject to the Contractor's supervision and control as to time, place, and manner of performance, who neither exerts nor proposes to exert improper influence to solicit or obtain Government contracts nor holds out as being able to obtain any Government contract or contracts through improper influence.

"Contingent fee," as used in this clause, means any commission, percentage, brokerage, or other fee that is contingent upon the success that a person or concern has in securing a Government contract.

"Improper influence," as used in this clause, means any influence that induces or tends to induce a Government employee or officer to give consideration or to act regarding a Government contract on any basis other than the merits of the matter.

(End of clause)
(R 7-103.20 1958 JAN)
(R 1-1.503)
(R 1-7.102-18)

7 52.203-7 ANTI-KICKBACK PROCEDURES (JUL 1995)

(a) Definitions.

"Kickback," as used in this clause, means any money, fee, commission, credit, gift, gratuity, thing of value, or compensation of any kind which is provided, directly or indirectly, to any prime Contractor, prime Contractor employee, subcontractor, or subcontractor employee for the purpose of improperly obtaining or rewarding favorable treatment in connection with a prime contract or in connection with a subcontract relating to a prime contract.

"Person," as used in this clause, means a corporation, partnership, business association of any kind, trust, joint-stock company, or individual.

"Prime contract," as used in this clause, means a contract or contractual action entered into by the United States for the purpose of obtaining supplies, materials, equipment, or services of any kind.

"Prime Contractor" as used in this clause, means a person who has entered into a prime contract with the United States.

"Prime Contractor employee," as used in this clause, means any officer, partner, employee, or agent of a prime Contractor.

"Subcontract," as used in this clause, means a contract or contractual action entered into by a prime Contractor or subcontractor for the purpose of obtaining supplies, materials, equipment, or services of any kind under a prime contract.

"Subcontractor," as used in this clause, (1) means any person, other than the prime Contractor, who offers to furnish or furnishes any supplies, materials, equipment, or services of any kind under a prime contract or a subcontract entered into in connection with such prime contract, and (2) includes any person who offers to furnish or furnishes general supplies to the prime Contractor or a higher tier subcontractor.

"Subcontractor employee," as used in this clause, means any officer, partner, employee, or agent of a subcontractor.

(b) The Anti-Kickback Act of 1986 (41 U.S.C. 51-58) (the Act), prohibits any person from--

(1) Providing or attempting to provide or offering to provide any kickback;

(2) Soliciting, accepting, or attempting to accept any kickback; or

(3) Including, directly or indirectly, the amount of any kickback in the contract price charged by a prime Contractor to the United States or in the contract price charged by a subcontractor to a prime Contractor or higher tier subcontractor.

(c)(1) The Contractor shall have in place and follow reasonable procedures designed to prevent and detect possible violations described in paragraph (b) of this clause in its own operations and direct business relationships.

(2) When the Contractor has reasonable grounds to believe that a violation described in paragraph (b) of this clause may have occurred, the Contractor shall promptly report in writing the possible violation. Such reports shall be made to the inspector general of the contracting agency, the head of the contracting agency if the agency does not have an inspector general, or the Department of Justice.

(3) The Contractor shall cooperate fully with any Federal agency investigating a possible violation described in paragraph (b) of this clause.

(4) The Contracting Officer may (i) offset the amount of the kickback against any monies owed by the United States under the prime contract and/or (ii) direct that the Prime Contractor withhold from sums owed a subcontractor under the prime contract the amount of the kickback. The Contracting Officer may order that monies withheld under subdivision (c)(4)(ii) of this clause be paid over to the Government unless the Government has already offset those monies under subdivision (c)(4)(i) of this clause. In either case, the Prime Contractor shall notify the Contracting Officer when the monies are withheld.

(5) The Contractor agrees to incorporate the substance of this clause, including subparagraph (c)(5) but excepting subparagraph (c)(1), in all subcontracts under this contract which exceed $100,000.

(End of clause)

8 52.203-8 CANCELLATION, RESCISSION, AND RECOVERY OF FUNDS FOR ILLEGAL OR IMPROPER ACTIVITY (JAN 1997)

(a) If the Government receives information that a contractor or a person has engaged in conduct constituting a violation of subsection (a), (b), (c), or (d) of Section 27 of the Office of Federal Procurement Policy Act (41 U.S.C. 423) (the Act), as amended by section 4304 of the National Defense Authorization Act for Fiscal Year 1996 (Pub. L. 104-106), the Government may--

(1) Cancel the solicitation, if the contract has not yet been awarded or issued; or

(2) Rescind the contract with respect to which--

(i) The Contractor or someone acting for the Contractor has been convicted for an offense where the conduct constitutes a violation of subsection 27 (a) or (b) of the Act for the purpose of either--

(A) Exchanging the information covered by such subsections for anything of value; or

(B) Obtaining or giving anyone a competitive advantage in the award of a Federal agency procurement contract; or

(ii) The head of the contracting activity has determined, based upon a preponderance of the evidence, that the Contractor or someone acting for the Contractor has engaged in conduct constituting an offense

punishable under subsection 27(e)(1) of the Act.

(b) If the Government rescinds the contract under paragraph (a) of this clause, the Government is entitled to recover, in addition to any penalty prescribed by law, the amount expended under the contract.

(c) The rights and remedies of the Government specified herein are not exclusive, and are in addition to any other rights and remedies provided by law, regulation, or under this contract.

(End of clause)

9 52.203-10 PRICE OR FEE ADJUSTMENT FOR ILLEGAL OR IMPROPER ACTIVITY (JAN 1997)

(a) The Government, at its election, may reduce the price of a fixed-price type contract and the total cost and fee under a cost-type contract by the amount of profit or fee determined as set forth in paragraph (b) of this clause if the head of the contracting activity or designee determines that there was a violation of subsection 27 (a), (b), or (c) of the Office of Federal Procurement Policy Act, as amended (41 U.S.C. 423), as implemented in section 3.104 of the Federal Acquisition Regulation.

(b) The price or fee reduction referred to in paragraph (a) of this clause shall be--

(1) For cost-plus-fixed-fee contracts, the amount of the fee specified in the contract at the time of award;

(2) For cost-plus-incentive-fee contracts, the target fee specified in the contract at the time of award, notwithstanding any minimum fee or "fee floor" specified in the contract;

(3) For cost-plus-award-fee contracts--

(i) The base fee established in the contract at the time of contract award;

(ii) If no base fee is specified in the contract, 30 percent of the amount of each award fee otherwise payable to the Contractor for each award fee evaluation period or at each award fee determination point.

(4) For fixed-price-incentive contracts, the Government may--

(i) Reduce the contract target price and contract target profit both by an amount equal to the initial target profit specified in the contract at the time of contract award; or

(ii) If an immediate adjustment to the contract target price and contract target profit would have a significant adverse impact on the incentive price revision relationship under the contract, or adversely affect the contract financing provisions, the Contracting Officer may defer such adjustment until establishment of the total final price of the contract. The total final price established in accordance with the incentive price revision provisions of the contract shall be reduced by an amount equal to the initial target profit specified in the contract at the time of contract award and such reduced price shall be the total final contract price.

(5) For firm-fixed-price contracts, by 10 percent of the initial contract price or a profit amount determined by the Contracting Officer from records or documents in existence prior to the date of the contract award.

(c) The Government may, at its election, reduce a prime contractor's price or fee in accordance with the procedures of paragraph (b) of this clause for violations of the Act by its subcontractors by an amount not to exceed the amount of profit or fee reflected in the subcontract at the time the subcontract was first definitively priced.

(d) In addition to the remedies in paragraphs (a) and (c) of this clause, the Government may terminate this contract for default. The rights and remedies of the Government specified herein are not exclusive, and are in addition to any other rights and remedies provided by law or under this contract.

(End of clause)

10 52.203-12 LIMITATION ON PAYMENTS TO INFLUENCE CERTAIN FEDERAL TRANSACTIONS (JUN 1997)

(a) Definitions.

"Agency," as used in this clause, means executive agency as defined in 2.101.

"Covered Federal action," as used in this clause, means any of the following Federal actions:

(1) The awarding of any Federal contract.

(2) The making of any Federal grant.

(3) The making of any Federal loan.

(4) The entering into of any cooperative agreement.

(5) The extension, continuation, renewal, amendment, or modification of any Federal contract, grant, loan, or cooperative agreement.

"Indian tribe" and "tribal organization," as used in this clause, have the meaning provided in section 4 of the Indian Self-Determination and Education Assistance Act (25 U.S.C. 450B) and include Alaskan Natives.

"Influencing or attempting to influence," as used in this clause, means making, with the intent to influence, any communication to or appearance before an officer or employee of any agency, a Member of Congress, an officer or employee of Congress, or an employee of a Member of Congress in connection with any covered Federal action.

"Local government," as used in this clause, means a unit of government in a State and, if chartered, established, or otherwise recognized by a State for the performance of a governmental duty, including a local public authority, a special district, an intrastate district, a council of governments, a sponsor group representative organization, and any other instrumentality of a local government.

"Officer or employee of an agency," as used in this clause, includes the following individuals who are employed by an agency:

(1) An individual who is appointed to a position in the Government under title 5, United States Code, including a position under a temporary appointment.

(2) A member of the uniformed services, as defined in subsection 101(3), title 37, United States Code.

(3) A special Government employee, as defined in section 202, title 18, United States Code.

(4) An individual who is a member of a Federal advisory committee, as defined by the Federal Advisory Committee Act, title 5, United States Code, appendix 2.

"Person," as used in this clause, means an individual, corporation, company, association, authority, firm, partnership, society, State, and local government, regardless of whether such entity is operated for profit, or not for profit. This term excludes an Indian tribe, tribal organization, or any other Indian organization with respect to expenditures specifically permitted by other Federal law.

"Reasonable compensation," as used in this clause, means, with respect to a regularly employed officer or employee of any person, compensation that is consistent with the normal compensation for such officer or

employee for work that is not furnished to, not funded by, or not furnished in cooperation with the Federal Government.

"Reasonable payment," as used in this clause, means, with respect to professional and other technical services, a payment in an amount that is consistent with the amount normally paid for such services in the private sector.

"Recipient," as used in this clause, includes the Contractor and all subcontractors. This term excludes an Indian tribe, tribal organization, or any other Indian organization with respect to expenditures specifically permitted by other Federal law.

"Regularly employed," as used in this clause, means, with respect to an officer or employee of a person requesting or receiving a Federal contract, an officer or employee who is employed by such person for at least 130 working days within 1 year immediately preceding the date of the submission that initiates agency consideration of such person for receipt of such contract. An officer or employee who is employed by such person for less than 130 working days within 1 year immediately preceding the date of the submission that initiates agency consideration of such person shall be considered to be regularly employed as soon as he or she is employed by such person for 130 working days.

"State," as used in this clause, means a State of the United States, the District of Columbia, the Commonwealth of Puerto Rico, a territory or possession of the United States, an agency or instrumentality of a State, and multi-State, regional, or interstate entity having governmental duties and powers.

(b) Prohibitions.

(1) Section 1352 of title 31, United States Code, among other things, prohibits a recipient of a Federal contract, grant, loan, or cooperative agreement from using appropriated funds to pay any person for influencing or attempting to influence an officer or employee of any agency, a Member of Congress, an officer or employee of Congress, or an employee of a Member of Congress in connection with any of the following covered Federal actions: the awarding of any Federal contract; the making of any Federal grant; the making of any Federal loan; the entering into of any cooperative agreement; or the modification of any Federal contract, grant, loan, or cooperative agreement.

(2) The Act also requires Contractors to furnish a disclosure if any funds other than Federal appropriated funds (including profit or fee received under a covered Federal transaction) have been paid, or will be paid, to any person for influencing or attempting to influence an officer or employee of any agency, a Member of Congress, an officer or employee of Congress, or an employee of a Member of Congress in connection with a Federal contract, grant, loan, or cooperative agreement.

(3) The prohibitions of the Act do not apply under the following conditions:

(i) Agency and legislative liaison by own employees.

(A) The prohibition on the use of appropriated funds, in subparagraph (b)(1) of this clause, does not apply in the case of a payment of reasonable compensation made to an officer or employee of a person requesting or receiving a covered Federal action if the payment is for agency and legislative liaison activities not directly related to a covered Federal action.

(B) For purposes of subdivision (b)(3)(i)(A) of this clause, providing any information specifically requested by an agency or Congress is permitted at any time.

(C) The following agency and legislative liaison activities are permitted at any time where they are not related to a specific

solicitation for any covered Federal action:

(1) Discussing with an agency the qualities and characteristics (including individual demonstrations) of the person's products or services, conditions or terms of sale, and service capabilities.

(2) Technical discussions and other activities regarding the application or adaptation of the person's products or services for an agency's use.

(D) The following agency and legislative liaison activities are permitted where they are prior to formal solicitation of any covered Federal action--

(1) Providing any information not specifically requested but necessary for an agency to make an informed decision about initiation of a covered Federal action;

(2) Technical discussions regarding the preparation of an unsolicited proposal prior to its official submission; and

(3) Capability presentations by persons seeking awards from an agency pursuant to the provisions of the Small Business Act, as amended by Pub. L. 95-507, and subsequent amendments.

(E) Only those services expressly authorized by subdivision (b)(3)(i)(A) of this clause are permitted under this clause.

(ii) Professional and technical services.

(A) The prohibition on the use of appropriated funds, in subparagraph (b)(1) of this clause, does not apply in the case of--

(1) A payment of reasonable compensation made to an officer or employee of a person requesting or receiving a covered Federal action or an extension, continuation, renewal, amendment, or modification of a covered Federal action, if payment is for professional or technical services rendered directly in the preparation, submission, or negotiation of any bid, proposal, or application for that Federal action or for meeting requirements imposed by or pursuant to law as a condition for receiving that Federal action.

(2) Any reasonable payment to a person, other than an officer or employee of a person requesting or receiving a covered Federal action or an extension, continuation, renewal, amendment, or modification of a covered Federal action if the payment is for professional or technical services rendered directly in the preparation, submission, or negotiation of any bid, proposal, or application for that Federal action or for meeting requirements imposed by or pursuant to law as a condition for receiving that Federal action. Persons other than officers or employees of a person requesting or receiving a covered Federal action include consultants and trade associations.

(B) For purposes of subdivision (b)(3)(ii)(A) of this clause, "professional and technical services" shall be limited to advice and analysis directly applying any professional or technical discipline. For example, drafting of a legal document accompanying a bid or proposal by a lawyer is allowable. Similarly, technical advice provided by an engineer on the performance or operational capability of a piece of equipment rendered directly in the negotiation of a contract is allowable. However, communications with the intent to influence made by a professional (such as a licensed lawyer) or a technical person (such as a licensed accountant) are not allowable under this section unless they provide advice and analysis directly applying their professional or technical expertise and unless the advice or analysis is rendered directly and solely in the preparation, submission or negotiation of a covered Federal action. Thus, for example,

communications with the intent to influence made by a lawyer that do not provide legal advice or analysis directly and solely related to the legal aspects of his or her client's proposal, but generally advocate one proposal over another are not allowable under this section because the lawyer is not providing professional legal services. Similarly, communications with the intent to influence made by an engineer providing an engineering analysis prior to the preparation or submission of a bid or proposal are not allowable under this section since the engineer is providing technical services but not directly in the preparation, submission or negotiation of a covered Federal action.

(C) Requirements imposed by or pursuant to law as a condition for receiving a covered Federal award include those required by law or regulation and any other requirements in the actual award documents.

(D) Only those services expressly authorized by subdivisions (b)(3)(ii)(A)(1) and (2) of this clause are permitted under this clause.

(E) The reporting requirements of FAR 3.803(a) shall not apply with respect to payments of reasonable compensation made to regularly employed officers or employees of a person.

(c) Disclosure.

(1) The Contractor who requests or receives from an agency a Federal contract shall file with that agency a disclosure form, OMB standard form LLL, Disclosure of Lobbying Activities, if such person has made or has agreed to make any payment using nonappropriated funds (to include profits from any covered Federal action), which would be prohibited under subparagraph (b)(1) of this clause, if paid for with appropriated funds.

(2) The Contractor shall file a disclosure form at the end of each calendar quarter in which there occurs any event that materially affects the accuracy of the information contained in any disclosure form previously filed by such person under subparagraph (c)(1) of this clause. An event that materially affects the accuracy of the information reported includes--

(i) A cumulative increase of $25,000 or more in the amount paid or expected to be paid for influencing or attempting to influence a covered Federal action; or

(ii) A change in the person(s) or individual(s) influencing or attempting to influence a covered Federal action; or

(iii) A change in the officer(s), employee(s), or Member(s) contacted to influence or attempt to influence a covered Federal action.

(3) The Contractor shall require the submittal of a certification, and if required, a disclosure form by any person who requests or receives any subcontract exceeding $100,000 under the Federal contract.

(4) All subcontractor disclosure forms (but not certifications) shall be forwarded from tier to tier until received by the prime Contractor. The prime Contractor shall submit all disclosures to the Contracting Officer at the end of the calendar quarter in which the disclosure form is submitted by the subcontractor. Each subcontractor certification shall be retained in the subcontract file of the awarding Contractor.

(d) Agreement. The Contractor agrees not to make any payment prohibited by this clause.

(e) Penalties.

(1) Any person who makes an expenditure prohibited under paragraph (a) of this clause or who fails to file or amend the disclosure form to be filed or amended by paragraph (b) of this clause shall be subject to civil penalties as provided for by 31 U.S.C. 1352. An imposition of a

civil penalty does not prevent the Government from seeking any other remedy that may be applicable.

(2) Contractors may rely without liability on the representation made by their subcontractors in the certification and disclosure form.

(f) Cost allowability. Nothing in this clause makes allowable or reasonable any costs which would otherwise be unallowable or unreasonable. Conversely, costs made specifically unallowable by the requirements in this clause will not be made allowable under any other provision.

(End of clause)

11 52.203-7001 PROHIBITION ON PERSONS CONVICTED OF FRAUD OR OTHER DEFENSE-CONTRACT-RELATED FELONIES (MAR 1999)

(a) Definitions.

As used in this clause--

(1) "Arising out of a contract with the DoD" means any act in connection with--

(i) Attempting to obtain;

(ii) Obtaining; or

(iii) Performing a contract or first-tier subcontract of any agency, department, or component of the Department of Defense (DoD).

(2) "Conviction of fraud or any other felony" means any conviction for fraud or a felony in violation of state or Federal criminal statutes, whether entered on a verdict or plea, including a plea of nolo contendere, for which sentence has been imposed.

(3) "Date of conviction" means the date judgment was entered against the individual.

(b) Any individual who is convicted after September 29, 1988, of fraud or any other felony arising out of a contract with the DoD is prohibited from serving--

(1) In a management or supervisory capacity on any DoD contract or first-tier subcontract;

(2) On the board of directors of any DoD contractor or first-tier subcontractor;

(3) As a consultant, agent, or representative for any DoD contractor or first-tier subcontractor; or

(4) In any other capacity with the authority to influence, advise, or control the decisions of any DoD contractor or subcontractor with regard to any DoD contract or first-tier subcontract.

(c) Unless waived, the prohibition in paragraph (b) of this clause applies for not less than 5 years from the date of conviction.

(d) 10 U.S.C. 2408 provides that a defense Contractor or first-tier subcontractor shall be subject to a criminal penalty of not more than $500,000 if convicted of knowingly--

(1) Employing a person under a prohibition specified in paragraph (b) of this clause; or

(2) Allowing such a person to serve on the board of directors of the Contractor or first-tier subcontractor.

(e) In addition to the criminal penalties contained in 10 U.S.C. 2408, the Government may consider other available remedies, such as--

(1) Suspension or debarment;

(2) Cancellation of the contract at no cost to the Government; or

(3) Termination of the contract for default.

(f) The Contractor may submit written requests for waiver of the prohibition in paragraph (b) of this clause to the Contracting Officer. Requests shall clearly identify--

(1) The person involved;

(2) The nature of the conviction and resultant sentence or punishment imposed;

(3) The reasons for the requested waiver; and

(4) An explanation of why a waiver is in the interest of national security.

(g) The Contractor agrees to include the substance of this clause, appropriately modified to reflect the identity and relationship of the parties, in all first-tier subcontracts exceeding the simplified acquisition threshold in Part 2 of the Federal Acquisition Regulation, except those for commercial items or components.

(h) Pursuant to 10 U.S.C. 2408(c), defense contractors and subcontractors may obtain information as to whether a particular person has been convicted of fraud or any other felony arising out of a contract with the DoD by contacting The Office of Justice Programs, The Denial of Federal Benefits Office, U.S. Department of Justice, telephone (202) 616-3507.

(End of clause)

12 52.203-7002 DISPLAY OF DOD HOTLINE POSTER (DEC 1991)

(a) The Contractor shall display prominently in common work areas within business segments performing work under Department of Defense (DoD) contracts, DoD Hotline Posters prepared by the DoD Office of the Inspector General.

(b) DoD Hotline Posters may be obtained from the DoD Inspector General, ATTN: Defense Hotline, 400 Army Navy Drive, Washington, DC 22202-2884.

(c) The Contractor need not comply with paragraph (a) of this clause if it has established a mechanism, such as a hotline, by which employees may report suspected instances of improper conduct, and instructions that encourage employees to make such reports.

(End of clause)

13 52.204-4 PRINTING/COPYING DOUBLE-SIDED ON RECYCLED PAPER (JUN 1996)

(a) In accordance with Executive Order 12873, dated October 20, 1993, as amended by Executive Order 12995, dated March 25, 1996, the Offeror/Contractor is encouraged to submit paper documents, such as offers, letters, or reports, that are printed/copied double-sided on recycled paper that has at least 20 percent postconsumer material.

(b) The 20 percent standard applies to high-speed copier paper, offset paper, forms bond, computer printout paper, carbonless paper, file folders, white woven envelopes, and other uncoated printed and writing paper, such as writing and office paper, book paper, cotton fiber paper, and cover stock. An alternative to meeting the 20 percent postconsumer material standard is 50 percent recovered material content of certain industrial by-products.

(End of clause)

14 52.204-7003 CONTROL OF GOVERNMENT PERSONNEL WORK PRODUCT (APR 1992)

The Contractor's procedures for protecting against unauthorized disclosure of information shall not require Department of Defense employees or members of the Armed Forces to relinquish control of their work products, whether classified or not, to the Contractor.

(End of clause)

15 52.209-6 PROTECTING THE GOVERNMENT'S INTEREST WHEN SUBCONTRACTING WITH CONTRACTORS DEBARRED, SUSPENDED, OR PROPOSED FOR DEBARMENT (JUL 1995)

(a) The Government suspends or debars Contractors to protect the Government's interest. The Contractor shall not enter into any subcontract in excess of $25,000 with a Contractor that is debarred, suspended, or proposed for debarment unless there is a compelling reason to do so.

(b) The Contractor shall require each proposed first-tier subcontractor, whose subcontract will exceed $25,000, to disclose to the Contractor, in writing, whether as of the time of award of the subcontract, the subcontractor, or its principals, is or is not debarred, suspended, or proposed for debarment by the Federal Government.

(c) A corporate officer or a designee of the Contractor shall notify the Contracting Officer, in writing, before entering into a subcontract with a party that is debarred, suspended, or proposed for debarment (see FAR 9.404 for information on the List of Parties Excluded from Federal Procurement and Nonprocurement Programs). The notice must include the following:

(1) The name of the subcontractor.

(2) The Contractor's knowledge of the reasons for the subcontractor being on the List of Parties Excluded from Federal Procurement and Nonprocurement Programs.

(3) The compelling reason(s) for doing business with the subcontractor notwithstanding its inclusion on the List of Parties Excluded from Federal Procurement and Nonprocurement Programs.

(4) The systems and procedures the Contractor has established to ensure that it is fully protecting the Government's interests when dealing with such subcontractor in view of the specific basis for the party's debarment, suspension, or proposed debarment.

(End of clause)

16 52.209-7004 SUBCONTRACTING WITH FIRMS THAT ARE OWNED OR CONTROLLED BY THE GOVERNMENT OF A TERRORIST COUNTRY (MAR 1998)

(a) Unless the Government determines that there is a compelling reason to do so, the Contractor shall not enter into any subcontract in excess of $25,000 with a firm, or a subsidiary of a firm, that is identified, on the List of Parties Excluded from Federal Procurement and Nonprocurement Programs, as being ineligible for the award of Defense contracts or subcontracts because it is owned or controlled by the government of a terrorist country.

(b) A corporate officer or a designee of the Contractor shall notify the Contracting Officer, in writing, before entering into a subcontract with a party that is identified, on the List of Parties Excluded from Federal Procurement and Nonprocurement Programs, as

being ineligible for the award of Defense contracts or subcontracts because it is owned or controlled by the government of a terrorist country. The notice must include the name of the proposed subcontractor and the compelling reason(s) for doing business with the subcontractor notwithstanding its inclusion on the List of Parties Excluded From Federal Procurement and Nonprocurement Programs.

(End of clause)

17 52.214-26 AUDIT AND RECORDS--SEALED BIDDING (OCT 1997)

(a) As used in this clause, records includes books, documents, accounting procedures and practices, and other data, regardless of type and regardless of whether such items are in written form, in the form of computer data, or in any other form.

(b) Cost or pricing data. If the Contractor has been required to submit cost or pricing data in connection with the pricing of any modification to this contract, the Contracting Officer, or an authorized representative of the Contracting Officer, in order to evaluate the accuracy, completeness, and currency of the cost or pricing data, shall have the right to examine and audit all of the Contractor's records, including computations and projections, related to--

(1) The proposal for the modification;

(2) The discussions conducted on the proposal(s), including those related to negotiating;

(3) Pricing of the modification; or

(4) Performance of the modification.

(c) Comptroller General. In the case of pricing any modification, the Comptroller General of the United States, or an authorized representative, shall have the same rights as specified in paragraph (b) of this clause.

(d) Availability. The Contractor shall make available at its office at all reasonable times the materials described in reproduction, until 3 years after final payment under this contract, or for any other period specified in Subpart 4.7 of the Federal Acquisition Regulation (FAR). FAR Subpart 4.7, Contractor Records Retention, in effect on the data of this contract, is incorporated by reference in its entirety and made a part of this contract.

(1) If this contract is completely or partially terminated, the records relating to the work terminated shall be made available for 3 years after any resulting final termination settlement.

(2) Records pertaining to appeals under the Disputes clause or to litigation or the settlement of claims arising under or relating to the performance of this contract shall be made available until disposition of such appeals, litigation, or claims.

(e) The Contractor shall insert a clause containing all the provisions of this clause, including this paragraph (e), in all subcontracts expected to exceed the threshold in FAR 15.403-4(a)(1) for submission of cost or pricing data.

(End of clause)

18 52.214-27 PRICE REDUCTION FOR DEFECTIVE COST OR PRICING DATA--MODIFICATIONS-- SEALED BIDDING (OCT 1997)

(a) This clause shall become operative only for any modification to this contract involving aggregate increases and/or decreases in costs, plus

applicable profits, expected to exceed the threshold for the submission of cost or pricing data at FAR 15.403-4(a)(1), except that this clause does not apply to a modification if an exception under FAR 15.403-1(b) applies.

(b) If any price, including profit, negotiated in connection with any modification under this clause, was increased by any significant amount because (1) the Contractor or a subcontractor furnished cost or pricing data that were not complete, accurate, and current as certified in its Certificate of Current Cost or Pricing Data, (2) a subcontractor or prospective subcontractor furnished the Contractor cost or pricing data that were not complete, accurate, and current as certified in the Contractor's Certificate of Current Cost or Pricing Data, or (3) any of these parties furnished data of any description that were not accurate, the price shall be reduced accordingly and the contract shall be modified to reflect the reduction. This right to a price reduction is limited to that resulting from defects in data relating to modifications for which this clause becomes operative under paragraph (a) above.

(c) Any reduction in the contract price under paragraph (b) above due to defective data from a prospective subcontractor that was not subsequently awarded the subcontract shall be limited to the amount, plus applicable overhead and profit markup, by which (1) the actual subcontract or (2) the actual cost to the Contractor, if there was no subcontract, was less than the prospective subcontract cost estimate submitted by the Contractor; provided, that the actual subcontract price was not itself affected by defective cost or pricing data.

(d)(1) If the Contracting Officer determines under paragraph (b) of this clause that a price or cost reduction should be made, the Contractor agrees not to raise the following matters as a defense:

(i) The Contractor or subcontractor was a sole source supplier or otherwise was in a superior bargaining position and thus the price of the contract would not have been modified even if accurate, complete, and current cost or pricing data had been submitted.

(ii) The Contracting Officer should have known that the cost or pricing data in issue were defective even though the Contractor or subcontractor took no affirmative action to bring the character of the data to the attention of the Contracting Officer.

(iii) The contract was based on an agreement about the total cost of the contract and there was no agreement about the cost of each item procured under the contract.

(iv) The Contractor or subcontractor did not submit a Certificate of Current Cost or Pricing Data.

(2)(i) Except as prohibited by subdivision (d)(2)(ii) of this clause, an offset in an amount determined appropriate by the Contracting Officer based upon the facts shall be allowed against the amount of a contract price reduction if--

(A) The Contractor certifies to the Contracting Officer that, to the best of the Contractor's knowledge and belief, the Contractor is entitled to the offset in the amount requested; and

(B) The Contractor proves that the cost or pricing data were available before the date of agreement on the price of the contract (or price of the modification) and that the data were not submitted before such date.

(ii) An offset shall not be allowed if--

(A) The understated data was known by the Contractor to be understated when the Certificate of Current Cost or Pricing Data was signed; or

(B) The Government proves that the facts demonstrate that the contract price would not have increased in the amount to be offset

even if the available data had been submitted before the date of agreement on price.

(e) If any reduction in the contract price under this clause reduces the price of items for which payment was made prior to the date of the modification reflecting the price reduction, the Contractor shall be liable to and shall pay the United States at the time such overpayment is repaid--

(1) Simple interest on the amount of such overpayment to be computed from the date(s) of overpayment to the Contractor to the date the Government is repaid by the Contractor at the applicable underpayment rate effective for each quarter prescribed by the Secretary of the Treasury under 26 U.S.C. 6621(a)(2); and

(2) A penalty equal to the amount of the overpayment, if the Contractor or subcontractor knowingly submitted cost or pricing data which were incomplete, inaccurate, or noncurrent.

(End of clause)

19 52.214-28 SUBCONTRACTOR COST OR PRICING DATA--MODIFICATIONS--SEALED BIDDING (OCT 1997)

(a) The requirements of paragraphs (b) and (c) of this clause shall (1) become operative only for any modification to this contract involving aggregate increases and/or decreases in costs, plus applicable profits, expected to exceed the threshold for submission of cost or pricing data at FAR 15.403-4(a)(1), and (2) be limited to such modifications.

(b) Before awarding any subcontract expected to exceed the threshold for submission of cost or pricing data at FAR 15.403-4(a)(1), on the date of agreement on price or the date of award, whichever is later; or before pricing any subcontract modifications involving aggregate increases and/or decreases in costs, plus applicable profits, expected to exceed the threshold for submission of cost or pricing data at FAR 15.403-4(a)(1), the Contractor shall require the subcontractor to submit cost or pricing data (actually or by specific identification in writing), unless an exception under FAR 15.403-1(b) applies.

(c) The Contractor shall require the subcontractor to certify in substantially the form prescribed in subsection FAR 15.406-2 that, to the best of its knowledge and belief, the data submitted under paragraph (b) of this clause were accurate, complete, and current as of the date of agreement on the negotiated price of the subcontract or subcontract modification.

(d) The Contractor shall insert the substance of this clause, including this paragraph (d), in each subcontract that, when entered into, exceeds the threshold for submission of cost or pricing data at FAR 15.403-4(a)(1).

(End of clause)

20 52.214-29 ORDER OF PRECEDENCE--SEALED BIDDING (JAN 1986)

Any inconsistency in this solicitation or contract shall be resolved by giving precedence in the following order: (a) the Schedule (excluding the specifications); (b) representations and other instructions; (c) contract clauses; (d) other documents, exhibits, and attachments; and (e) the specifications.

(End of clause)

21 52.219-8 UTILIZATION OF SMALL BUSINESS CONCERNS (OCT 1999)

(a) It is the policy of the United States that small business concerns, HUBZone small business concerns, small business concerns owned and controlled by socially and economically disadvantaged individuals, and small business concerns owned and controlled by women shall have the maximum practicable opportunity to participate in performing contracts let by any Federal agency, including contracts and subcontracts for subsystems, assemblies, components, and related services for major systems. It is further the policy of the United States that its prime contractors establish procedures to ensure the timely payment of amounts due pursuant to the terms of their subcontracts with small business concerns, HUBZone small business concerns, small business concerns owned and controlled by socially and economically disadvantaged individuals, and small business concerns owned and controlled by women.

(b) The Contractor hereby agrees to carry out this policy in the awarding of subcontracts to the fullest extent consistent with efficient contract performance. The Contractor further agrees to cooperate in any studies or surveys as may be conducted by the United States Small Business Administration or the awarding agency of the United States as may be necessary to determine the extent of the Contractor's compliance with this clause.

(c) Definitions. As used in this contract

(1) Small business concern means a small business as defined pursuant to section 3 of the Small Business Act and relevant regulations promulgated pursuant thereto.

(2) HUBZone small business concern means a small business concern that appears on the List of Qualified HUBZone Small Business Concerns maintained by the Small Business Administration.

(3) Small business concern owned and controlled by socially and economically disadvantaged individuals and small disadvantaged business concern mean a small business concern that represents, as part of its offer that--

(i) It has received certification as a small disadvantaged business concern consistent with 13 CFR 124, Subpart B;

(ii) No material change in disadvantaged ownership and control has occurred since its certification;

(iii) Where the concern is owned by one or more individuals, the net worth of each individual upon whom the certification is based does not exceed $750,000 after taking into account the applicable exclusions set forth at 13 CFR 124.104(c)(2); and

(iv) It is identified, on the date of its representation, as a certified small disadvantaged business in the database maintained by the Small Business Administration (PRO-Net).

(4) Small business concern owned and controlled by women means a small business concern--

(i) Which is at least 51 percent owned by one or more women, or, in the case of any publicly owned business, at least 51 percent of the stock of which is owned by one or more women; and

(ii) Whose management and daily business operations are controlled by one or more women.

(d) Contractors acting in good faith may rely on written representations by their subcontractors regarding their status as a small business concern, a HUBZone small business concern, a small business concern owned and controlled by socially and economically disadvantaged individuals, or a small business concern owned and controlled by women.

(End of clause)

22 52.219-9 I SMALL BUSINESS SUBCONTRACTING PLAN (JAN 1999)--ALTERNATE I (JAN 1999)

(a) This clause does not apply to small business concerns.

(b) Definitions. As used in this clause--

Commercial item means a product or service that satisfies the definition of commercial item in section 2.101 of the Federal Acquisition Regulation.

Commercial plan means a subcontracting plan (including goals) that covers the offeror's fiscal year and that applies to the entire production of commercial items sold by either the entire company or a portion thereof (e.g., division, plant, or product line).

Individual contract plan means a subcontracting plan that covers the entire contract period (including option periods), applies to a specific contract, and has goals that are based on the offeror's planned subcontracting in support of the specific contract, except that indirect costs incurred for common or joint purposes may be allocated on a prorated basis to the contract.

Master plans means a subcontracting plan that contains all the required elements of an individual contract plan, except goals, and may be incorporated into individual contract plans, provided the master plan has been approved.

Subcontract means any agreement (other than one involving an employer-employee relationship) entered into by a Federal Government prime Contractor or subcontractor calling for supplies or services required for performance of the contract or subcontract.

(c) The apparent low bidder, upon request by the Contracting Officer, shall submit a subcontracting plan, where applicable, that separately addresses subcontracting with small business, HUBZone small business, small disadvantaged business, and women-owned small business concerns. If the bidder is submitting an individual contract plan, the plan must separately address subcontracting with small business, HUBZone small business, small disadvantaged business, and women-owned small business concerns, with a separate part for the basic contract and separate parts for each option (if any). The plan shall be included in and made a part of the resultant contract. The subcontracting plan shall be submitted within the time specified by the Contracting Officer. Failure to submit the subcontracting plan shall make the bidder ineligible for the award of a contract.

(d) The offeror's subcontracting plan shall include the following:

(1) Goals, expressed in terms of percentages of total planned subcontracting dollars, for the use of small business, HUBZone small business, small disadvantaged business, and women-owned small business concerns as subcontractors. The offeror shall include all subcontracts that contribute to contract performance, and may include a proportionate share of products and services that are normally allocated as indirect costs.

(2) A statement of--

(i) Total dollars planned to be subcontracted for an individual contract plan; or the offeror's total projected sales, expressed in dollars, and the total value of projected subcontracts to support the sales for a commercial plan;

(ii) Total dollars planned to be subcontracted to small business concerns;

(iii) Total dollars planned to be subcontracted to HUBZone small business concerns;

(iv) Total dollars planned to be subcontracted to small disadvantaged business concerns; and

(v) Total dollars planned to be subcontracted to women-owned small business concerns.

(3) A description of the principal types of supplies and services to be subcontracted, and an identification of the types planned for subcontracting to--

(i) Small business concerns;

(ii) HUBZone small business concerns;

(iii) Small disadvantaged business concerns; and

(iv) Women-owned small business concerns.

(4) A description of the method used to develop the subcontracting goals in paragraph (d)(1) of this clause.

(5) A description of the method used to identify potential sources for solicitation purposes (e.g., existing company source lists, the Procurement Marketing and Access Network (PRO-Net) of the Small Business Administration (SBA), the list of certified small disadvantaged business concerns of the SBA, the National Minority Purchasing Council Vendor Information Service, the Research and Information Division of the Minority Business Development Agency in the Department of Commerce, or small, HUBZone small, small disadvantaged, and women-owned small business trade associations). A firm may rely on the information contained in PRO-Net as an accurate representation of a concern's size and ownership characteristics for the purposes of maintaining a small and women-owned small business source list. A firm shall rely on the information contained in SBA's list of small disadvantaged business concerns as an accurate representation of a concern's size and ownership characteristics for the purposes of maintaining a small disadvantaged business source list. Use of PRO-Net and/or the SBA list of small disadvantaged business concerns as its source lists does not relieve a firm of its responsibilities (e.g., outreach, assistance, counseling, publicizing subcontracting opportunities) in this clause.

(6) A statement as to whether or not the offeror included indirect costs in establishing subcontracting goals, and a description of the method used to determine the proportionate share of indirect costs to be incurred with--

(i) Small business concerns;

(ii) HUBZone small business concerns;

(iii) Small disadvantaged business concerns; and

(iv) Women-owned small business concerns.

(7) The name of the individual employed by the offeror who will administer the offeror's subcontracting program, and a description of the duties of the individual.

(8) A description of the efforts the offeror will make to assure that small business, HUBZone small business, small disadvantaged business, and women-owned small business concerns have an equitable opportunity to compete for subcontracts.

(9) Assurances that the offeror will include the clause of this contract entitled "Utilization of Small Business Concerns" in all subcontracts that offer further subcontracting opportunities, and that the offeror will require all subcontractors (except small business concerns) that receive subcontracts in excess of $500,000 ($1,000,000 for construction of any public facility) to adopt a subcontracting plan that complies with the requirements of this clause.

(10) Assurances that the offeror will--

(i) Cooperate in any studies or surveys as may be required;

(ii) Submit periodic reports so that the Government can determine the extent of compliance by the offeror with the subcontracting plan;

(iii) Submit Standard Form (SF) 294, Subcontracting Report for Individual Contracts, and/or SF 295, Summary Subcontract Report, in accordance with the instructions on the forms or as provided in agency regulations and in paragraph (j) of this clause; and

(iv) Ensure that its subcontractors agree to submit SF 294 and SF 295.

(11) A description of the types of records that will be maintained concerning procedures that have been adopted to comply with the requirements and goals in the plan, including establishing source lists; and a description of the offeror's efforts to locate small business, HUBZone small business, small disadvantaged business, and women-owned small business concerns and award subcontracts to them. The records shall include at least the following (on a plant-wide or company-wide basis, unless otherwise indicated):

(i) Source lists (e.g., PRO-Net), guides, and other data that identify small business, HUBZone small business, small disadvantaged business, and women-owned small business concerns.

(ii) Organizations contacted in an attempt to locate sources that are small business, HUBZone small business, small disadvantaged business, or women-owned small business concerns.

(iii) Records on each subcontract solicitation resulting in an award of more than $100,000, indicating--

(A) Whether small business concerns were solicited and, if not, why not;

(B) Whether HUBZone small business concerns were solicited and, if not, why not;

(C) Whether small disadvantaged business concerns were solicited and, if not, why not;

(D) Whether women-owned small business concerns were solicited and, if not, why not; and

(E) If applicable, the reason award was not made to a small business concern.

(iv) Records of any outreach efforts to contact--

(A) Trade associations;

(B) Business development organizations; and

(C) Conferences and trade fairs to locate small, HUBZone small, small disadvantaged, and women-owned small business sources.

(v) Records of internal guidance and encouragement provided to buyers through--

(A) Workshops, seminars, training, etc.; and

(B) Monitoring performance to evaluate compliance with the program's requirements.

(vi) On a contract-by-contract basis, records to support award

data submitted by the offeror to the Government, including the name, address, and business size of each subcontractor. Contractors having commercial plans need not comply with this requirement.

(e) In order to effectively implement this plan to the extent consistent with efficient contract performance, the Contractor shall perform the following functions:

(1) Assist small business, HUBZone small business, small disadvantaged business, and women-owned small business concerns by arranging solicitations, time for the preparation of bids, quantities, specifications, and delivery schedules so as to facilitate the participation by such concerns. Where the Contractor's lists of potential small business, HUBZone small business, small disadvantaged business, and women-owned small business subcontractors are excessively long, reasonable effort shall be made to give all such small business concerns an opportunity to compete over a period of time.

(2) Provide adequate and timely consideration of the potentialities of small business, HUBZone small business, small disadvantaged business, and women-owned small business concerns in all "make-or-buy" decisions.

(3) Counsel and discuss subcontracting opportunities with representatives of small business, HUBZone small business, small disadvantaged business, and women-owned small business firms.

(4) Provide notice to subcontractors concerning penalties and remedies for misrepresentations of business status as small, HUBZone small, small disadvantaged, or women-owned small business for the purpose of obtaining a subcontract that is to be included as part or all of a goal contained in the Contractor's subcontracting plan.

(f) A master plan on a plant or division-wide basis that contains all the elements required by paragraph (d) of this clause, except goals, may be incorporated by reference as a part of the subcontracting plan required of the offeror by this clause; provided--(1) the master plan has been approved, (2) the offeror ensures that the master plan is updated as necessary and provides copies of the approved master plan, including evidence of its approval, to the Contracting Officer, and (3) goals and any deviations from the master plan deemed necessary by the Contracting Officer to satisfy the requirements of this contract are set forth in the individual subcontracting plan.

(g) A commercial plan is the preferred type of subcontracting plan for contractors furnishing commercial items. The commercial plan shall relate to the offeror's planned subcontracting generally, for both commercial and Government business, rather than solely to the Government contract. Commercial plans are also preferred for subcontractors that provide commercial items under a prime contract, whether or not the prime contractor is supplying a commercial item.

(h) Prior compliance of the offeror with other such subcontracting plans under previous contracts will be considered by the Contracting Officer in determining the responsibility of the offeror for award of the contract.

(i) The failure of the Contractor or subcontractor to comply in good faith with (1) the clause of this contract entitled "Utilization Of Small Business Concerns," or (2) an approved plan required by this clause, shall be a material breach of the contract.

(j) The Contractor shall submit the following reports:

(1) Standard Form 294, Subcontracting Report for Individual Contracts. This report shall be submitted to the Contracting Officer semiannually and at contract completion. The report covers subcontract award data related to this contract. This report is not

required for commercial plans.

(2) Standard Form 295, Summary Subcontract Report. This report encompasses all the contracts with the awarding agency. It must be submitted semi-annually for contracts with the Department of Defense and annually for contracts with civilian agencies. If the reporting activity is covered by a commercial plan, the reporting activity must report annually all subcontract awards under that plan. All reports submitted at the close of each fiscal year (both individual and commercial plans) shall include a breakout, in the Contractor's format, of subcontract awards, in whole dollars, to small disadvantaged business concerns by Standard Industrial Classification (SIC) Major Group. For a commercial plan, the Contractor may obtain from each of its subcontractors a predominant SIC Major Group and report all awards to that subcontractor under its predominant SIC Major Group.

(End of clause)

23 52.219-16 LIQUIDATED DAMAGES--SUBCONTRACTING PLAN (JAN 1999)

(a) "Failure to make a good faith effort to comply with the subcontracting plan," as used in this clause, means a willful or intentional failure to perform in accordance with the requirements of the subcontracting plan approved under the clause in this contract entitled "Small Business Subcontracting Plan," or willful or intentional action to frustrate the plan.

(b) Performance shall be measured by applying the percentage goals to the total actual subcontracting dollars or, if a commercial plan is involved, to the pro rata share of actual subcontracting dollars attributable to Government contracts covered by the commercial plan. If, at contract completion or, in the case of a commercial plan, at the close of the fiscal year for which the plan is applicable, the Contractor has failed to meet its subcontracting goals and the Contracting Officer decides in accordance with paragraph (c) of this clause that the Contractor failed to make a good faith effort to comply with its subcontracting plan, established in accordance with the clause in this contract entitled "Small Business Subcontracting Plan," the Contractor shall pay the Government liquidated damages in an amount stated. The amount of probable damages attributable to the Contractor's failure to comply shall be an amount equal to the actual dollar amount by which the Contractor failed to achieve each subcontract goal.

(c) Before the Contracting Officer makes a final decision that the Contractor has failed to make such good faith effort, the Contracting Officer shall give the Contractor written notice specifying the failure and permitting the Contractor to demonstrate what good faith efforts have been made and to discuss the matter. Failure to respond to the notice may be taken as an admission that no valid explanation exists. If, after consideration of all the pertinent data, the Contracting Officer finds that the Contractor failed to make a good faith effort to comply with the subcontracting plan, the Contracting Officer shall issue a final decision to that effect and require that the Contractor pay the Government liquidated damages as provided in paragraph (b) of this clause.

(d) With respect to commercial plans, the Contracting Officer who approved the plan will perform the functions of the Contracting Officer under this clause on behalf of all agencies with contracts

covered by the commercial plan.

(e) The Contractor shall have the right of appeal, under the clause in this contract entitled, Disputes, from any final decision of the Contracting Officer.

(f) Liquidated damages shall be in addition to any other remedies that the Government may have.

(End of clause)

24 52.222-4 CONTRACT WORK HOURS AND SAFETY STANDARDS ACT--OVERTIME COMPENSATION (JUL 1995)

(a) Overtime requirements. No Contractor or subcontractor contracting for any part of the contract work which may require or involve the employment of laborers or mechanics (see Federal Acquisition Regulation (FAR) 22.300) shall require or permit any such laborers or mechanics in any workweek in which the individual is employed on such work to work in excess of 40 hours in such workweek unless such laborer or mechanic receives compensation at a rate not less than 1 1/2 times the basic rate of pay for all hours worked in excess of 40 hours in such workweek.

(b) Violation; liability for unpaid wages; liquidated damages. In the event of any violation of the provisions set forth in paragraph (a) of this clause, the Contractor and any subcontractor responsible therefor shall be liable for the unpaid wages. In addition, such Contractor and subcontractor shall be liable to the United States (in the case of work done under contract for the District of Columbia or a territory, to such District or to such territory), for liquidated damages. Such liquidated damages shall be computed with respect to each individual laborer or mechanic employed in violation of the provisions set forth in paragraph (a) of this clause in the sum of $10 for each calendar day on which such individual was required or permitted to work in excess of the standard workweek of 40 hours without payment of the overtime wages required by provisions set forth in paragraph (a) of this clause.

(c) Withholding for unpaid wages and liquidated damages. The Contracting Officer shall upon his or her own action or upon written request of an authorized representative of the Department of Labor withhold or cause to be withheld, from any moneys payable on account of work performed by the Contractor or subcontractor under any such contract or any other Federal contract with the same Prime Contractor, or any other Federally-assisted contract subject to the Contract Work Hours and Safety Standards Act which is held by the same Prime Contractor, such sums as may be determined to be necessary to satisfy any liabilities of such Contractor or subcontractor for unpaid wages and liquidated damages as provided in the provisions set forth in paragraph (b) of this clause.

(d) Payrolls and basic records. (1) The Contractor or subcontractor shall maintain payrolls and basic payroll records during the course of contract work and shall preserve them for a period of 3 years from the completion of the contract for all laborers and mechanics working on the contract. Such records shall contain the name and address of each such employee, social security number, correct classifications, hourly rates of wages paid, daily and weekly number of hours worked, deductions made, and actual wages paid. Nothing in this paragraph shall require the duplication of records required to be maintained for construction work by Department of Labor regulations at 29 CFR 5.5(a)(3) implementing the Davis-Bacon Act.

(2) The records to be maintained under paragraph (d)(1) of this clause shall be made available by the Contractor or subcontractor for inspection, copying, or transcription by authorized representatives of

the Contracting Officer or the Department of Labor. The Contractor or subcontractor shall permit such representatives to interview employees during working hours on the job.

(e) Subcontracts. The Contractor or subcontractor shall insert in any subcontracts exceeding $100,000, the provisions set forth in paragraphs (a) through (e) of this clause and also a clause requiring the subcontractors to include these provisions in any lower tier subcontracts. The Prime Contractor shall be responsible for compliance by any subcontractor or lower tier subcontractor with the provisions set forth in paragraphs (a) through (e) of this clause.

(End of clause)

25 52.222-6 DAVIS-BACON ACT (FEB 1995)

(a) All laborers and mechanics employed or working upon the site of the work will be paid unconditionally and not less often than once a week, and without subsequent deduction or rebate on any account (except such payroll deductions as are permitted by regulations issued by the Secretary of Labor under the Copeland Act (29 CFR Part 3)), the full amount of wages and bona fide fringe benefits (or cash equivalents thereof) due at time of payment computed at rates not less than those contained in the wage determination of the Secretary of Labor which is attached hereto and made a part hereof, regardless of any contractual relationship which may be alleged to exist between the Contractor and such laborers and mechanics. Contributions made or costs reasonably anticipated for bona fide fringe benefits under section 1(b)(2) of the Davis-Bacon Act on behalf of laborers or mechanics are considered wages paid to such laborers or mechanics, subject to the provisions of paragraph (d) of this clause; also, regular contributions made or costs incurred for more than a weekly period (but not less often than quarterly) under plans, funds, or programs which cover the particular weekly period, are deemed to be constructively made or incurred during such period. Such laborers and mechanics shall be paid not less than the appropriate wage rate and fringe benefits in the wage determination for the classification of work actually performed, without regard to skill, except as provided in the clause entitled Apprentices and Trainees. Laborers or mechanics performing work in more than one classification may be compensated at the rate specified for each classification for the time actually worked therein; provided, that the employer's payroll records accurately set forth the time spent in each classification in which work is performed. The wage determination (including any additional classifications and wage rates conformed under paragraph (b) of this clause) and the Davis-Bacon poster (WH-1321) shall be posted at all times by the Contractor and its subcontractors at the site of the work in a prominent and accessible place where it can be easily seen by the workers.

(b)(1) The Contracting Officer shall require that any class of laborers or mechanics which is not listed in the wage determination and which is to be employed under the contract shall be classified in conformance with the wage determination. The Contracting Officer shall approve an additional classification and wage rate and fringe benefits therefor only when all the following criteria have been met:

(i) The work to be performed by the classification requested is not performed by a classification in the wage determination.

(ii) The classification is utilized in the area by the construction industry.

(iii) The proposed wage rate, including any bona fide fringe benefits, bears a reasonable relationship to the wage rates contained

in the wage determination.

(iv) With respect to helpers, such a classification prevails in the area in which the work is performed.

(2) If the Contractor and the laborers and mechanics to be employed in the classification (if known), or their representatives, and the Contracting Officer agree on the classification and wage rate (including the amount designated for fringe benefits, where appropriate), a report of the action taken shall be sent by the Contracting Officer to the Administrator of the Wage and Hour Division, Employment Standards Administration, U.S. Department of Labor, Washington, DC 20210. The Administrator or an authorized representative will approve, modify, or disapprove every additional classification action within 30 days of receipt and so advise the Contracting Officer or will notify the Contracting Officer within the 30-day period that additional time is necessary.

(3) In the event the Contractor, the laborers or mechanics to be employed in the classification, or their representatives, and the Contracting Officer do not agree on the proposed classification and wage rate (including the amount designated for fringe benefits, where appropriate), the Contracting Officer shall refer the questions, including the views of all interested parties and the recommendation of the Contracting Officer, to the Administrator of the Wage and Hour Division for determination. The Administrator, or an authorized representative, will issue a determination within 30 days of receipt and so advise the Contracting Officer or will notify the Contracting Officer within the 30-day period that additional time is necessary.

(4) The wage rate (including fringe benefits, where appropriate) determined pursuant to subparagraphs (b)(2) and (b)(3) of this clause shall be paid to all workers performing work in the classification under this contract from the first day on which work is performed in the classification.

(c) Whenever the minimum wage rate prescribed in the contract for a class of laborers or mechanics includes a fringe benefit which is not expressed as an hourly rate, the Contractor shall either pay the benefit as stated in the wage determination or shall pay another bona fide fringe benefit or an hourly cash equivalent thereof.

(d) If the Contractor does not make payments to a trustee or other third person, the Contractor may consider as part of the wages of any laborer or mechanic the amount of any costs reasonably anticipated in providing bona fide fringe benefits under a plan or program; provided, that the Secretary of Labor has found, upon the written request of the Contractor, that the applicable standards of the Davis-Bacon Act have been met. The Secretary of Labor may require the Contractor to set aside in a separate account assets for the meeting of obligations under the plan or program.

(End of clause)

26 52.222-7 WITHHOLDING OF FUNDS (FEB 1988)

The Contracting Officer shall, upon his or her own action or upon written request of an authorized representative of the Department of Labor, withhold or cause to be withheld from the Contractor under this contract or any other Federal contract with the same Prime Contractor, or any other Federally assisted contract subject to Davis-Bacon prevailing wage requirements, which is held by the same Prime Contractor, so much of the accrued payments or advances as may be considered necessary to pay laborers and mechanics, including apprentices, trainees, and helpers, employed by

the Contractor or any subcontractor the full amount of wages required by the contract. In the event of failure to pay any laborer or mechanic, including any apprentice, trainee, or helper, employed or working on the site of the work, all or part of the wages required by the contract, the Contracting Officer may, after written notice to the Contractor, take such action as may be necessary to cause the suspension of any further payment, advance, or guarantee of funds until such violations have ceased.

(End of clause)

27 52.222-8 PAYROLLS AND BASIC RECORDS (FEB 1988)

(a) Payrolls and basic records relating thereto shall be maintained by the Contractor during the course of the work and preserved for a period of 3 years thereafter for all laborers and mechanics working at the site of the work. Such records shall contain the name, address, and social security number of each such worker, his or her correct classification, hourly rates of wages paid (including rates of contributions or costs anticipated for bona fide fringe benefits or cash equivalents thereof of the types described in section 1(b)(2)(B) of the Davis-Bacon Act), daily and weekly number of hours worked, deductions made, and actual wages paid. Whenever the Secretary of Labor has found, under paragraph (d) of the clause entitled Davis-Bacon Act, that the wages of any laborer or mechanic include the amount of any costs reasonably anticipated in providing benefits under a plan or program described in section 1(b)(2)(B) of the Davis-Bacon Act, the Contractor shall maintain records which show that the commitment to provide such benefits is enforceable, that the plan or program is financially responsible, and that the plan or program has been communicated in writing to the laborers or mechanics affected, and records which show the costs anticipated or the actual cost incurred in providing such benefits. Contractors employing apprentices or trainees under approved programs shall maintain written evidence of the registration of apprenticeship programs and certification of trainee programs, the registration of apprentices and trainees, and the ratios and wage rates prescribed in the applicable programs.

(b)(1) The Contractor shall submit weekly for each week in which any contract work is performed a copy of all payrolls to the Contracting Officer. The payrolls submitted shall set out accurately and completely all of the information required to be maintained under paragraph (a) of this clause. This information may be submitted in any form desired. Optional Form WH-347 (Federal Stock Number 029-005-00014-1) is available for this purpose and may be purchased from the Superintendent of Documents, U.S. Government Printing Office, Washington, DC 20402. The Prime Contractor is responsible for the submission of copies of payrolls by all subcontractors.

(2) Each payroll submitted shall be accompanied by a "Statement of Compliance," signed by the Contractor or subcontractor or his or her agent who pays or supervises the payment of the persons employed under the contract and shall certify--

(i) That the payroll for the payroll period contains the information required to be maintained under paragraph (a) of this clause and that such information is correct and complete;

(ii) That each laborer or mechanic (including each helper, apprentice, and trainee) employed on the contract during the payroll period has been paid the full weekly wages earned, without rebate, either directly or indirectly, and that no deductions have been made either directly or indirectly from the full wages earned, other than

permissible deductions as set forth in the Regulations, 29 CFR Part 3; and

(iii) That each laborer or mechanic has been paid not less than the applicable wage rates and fringe benefits or cash equivalents for the classification of work performed, as specified in the applicable wage determination incorporated into the contract.

(3) The weekly submission of a properly executed certification set forth on the reverse side of Optional Form WH-347 shall satisfy the requirement for submission of the "Statement of Compliance" required by subparagraph (b)(2) of this clause.

(4) The falsification of any of the certifications in this clause may subject the Contractor or subcontractor to civil or criminal prosecution under Section 1001 of Title 18 and Section 3729 of Title 31 of the United States Code.

(c) The Contractor or subcontractor shall make the records required under paragraph (a) of this clause available for inspection, copying, or transcription by the Contracting Officer or authorized representatives of the Contracting Officer or the Department of Labor. The Contractor or subcontractor shall permit the Contracting Officer or representatives of the Contracting Officer or the Department of Labor to interview employees during working hours on the job. If the Contractor or subcontractor fails to submit required records or to make them available, the Contracting Officer may, after written notice to the Contractor, take such action as may be necessary to cause the suspension of any further payment. Furthermore, failure to submit the required records upon request or to make such records available may be grounds for debarment action pursuant to 29 CFR 5.12.

(End of clause)

28 52.222-9 APPRENTICES AND TRAINEES (FEB 1988)

(a) Apprentices. Apprentices will be permitted to work at less than the predetermined rate for the work they performed when they are employed pursuant to and individually registered in a bona fide apprenticeship program registered with the U.S. Department of Labor, Employment and Training Administration, Bureau of Apprenticeship and Training, or with a State Apprenticeship Agency recognized by the Bureau, or if a person is employed in his or her first 90 days of probationary employment as an apprentice in such an apprenticeship program, who is not individually registered in the program, but who has been certified by the Bureau of Apprenticeship and Training or a State Apprenticeship Agency (where appropriate) to be eligible for probationary employment as an apprentice. The allowable ratio of apprentices to journeymen on the job site in any craft classification shall not be greater than the ratio permitted to the Contractor as to the entire work force under the registered program. Any worker listed on a payroll at an apprentice wage rate, who is not registered or otherwise employed as stated in this paragraph, shall be paid not less than the applicable wage determination for the classification of work actually performed. In addition, any apprentice performing work on the job site in excess of the ratio permitted under the registered program shall be paid not less than the applicable wage rate on the wage determination for the work actually performed. Where a contractor is performing construction on a project in a locality other than that in which its program is registered, the ratios and wage rates (expressed in percentages of the journeyman's hourly rate) specified in the Contractor's or subcontractor's registered program shall be observed. Every apprentice

must be paid at not less than the rate specified in the registered program for the apprentice's level of progress, expressed as a percentage of the journeyman hourly rate specified in the applicable wage determination. Apprentices shall be paid fringe benefits in accordance with the provisions of the apprenticeship program. If the apprenticeship program does not specify fringe benefits, apprentices must be paid the full amount of fringe benefits listed on the wage determination for the applicable classification. If the Administrator determines that a different practice prevails for the applicable apprentice classification, fringes shall be paid in accordance with that determination. In the event the Bureau of Apprenticeship and Training, or a State Apprenticeship Agency recognized by the Bureau, withdraws approval of an apprenticeship program, the Contractor will no longer be permitted to utilize apprentices at less than the applicable predetermined rate for the work performed until an acceptable program is approved.

(b) Trainees. Except as provided in 29 CFR 5.16, trainees will not be permitted to work at less than the predetermined rate for the work performed unless they are employed pursuant to and individually registered in a program which has received prior approval, evidenced by formal certification by the U.S. Department of Labor, Employment and Training Administration. The ratio of trainees to journeymen on the job site shall not be greater than permitted under the plan approved by the Employment and Training Administration. Every trainee must be paid at not less than the rate specified in the approved program for the trainee's level of progress, expressed as a percentage of the journeyman hourly rate specified in the applicable wage determination. Trainees shall be paid fringe benefits in accordance with the provisions of the trainee program. If the trainee program does not mention fringe benefits, trainees shall be paid the full amount of fringe benefits listed in the wage determination unless the Administrator of the Wage and Hour Division determines that there is an apprenticeship program associated with the corresponding journeyman wage rate in the wage determination which provides for less than full fringe benefits for apprentices. Any employee listed on the payroll at a trainee rate who is not registered and participating in a training plan approved by the Employment and Training Administration shall be paid not less than the applicable wage rate in the wage determination for the classification of work actually performed. In addition, any trainee performing work on the job site in excess of the ratio permitted under the registered program shall be paid not less than the applicable wage rate in the wage determination for the work actually performed. In the event the Employment and Training Administration withdraws approval of a training program, the Contractor will no longer be permitted to utilize trainees at less than the applicable predetermined rate for the work performed until an acceptable program is approved.

(c) Equal employment opportunity. The utilization of apprentices, trainees, and journeymen under this clause shall be in conformity with the equal employment opportunity requirements of Executive Order 11246, as amended, and 29 CFR Part 30.

(End of clause)

29 52.222-10 COMPLIANCE WITH COPELAND ACT REQUIREMENTS (FEB 1988)

The Contractor shall comply with the requirements of 29 CFR Part 3, which are hereby incorporated by reference in this contract.

(End of clause)

30 52.222-11 SUBCONTRACTS (LABOR STANDARDS) (FEB 1988)

(a) The Contractor or subcontractor shall insert in any subcontracts the clauses entitled Davis-Bacon Act, Contract Work Hours and Safety Standards Act--Overtime Compensation, Apprentices and Trainees, Payrolls and Basic Records, Compliance with Copeland Act Requirements, Withholding of Funds, Subcontracts (Labor Standards), Contract Termination--Debarment, Disputes Concerning Labor Standards, Compliance with Davis-Bacon and Related Act Regulations, and Certification of Eligibility, and such other clauses as the Contracting Officer may, by appropriate instructions, require, and also a clause requiring subcontractors to include these clauses in any lower tier subcontracts. The Prime Contractor shall be responsible for compliance by any subcontractor or lower tier subcontractor with all the contract clauses cited in this paragraph.

(b)(1) Within 14 days after award of the contract, the Contractor shall deliver to the Contracting Officer a completed Statement and Acknowledgment Form (SF 1413) for each subcontract, including the subcontractor's signed and dated acknowledgment that the clauses set forth in paragraph (a) of this clause have been included in the subcontract.

(2) Within 14 days after the award of any subsequently awarded subcontract the Contractor shall deliver to the Contracting Officer an updated completed SF 1413 for such additional subcontract.

(End of clause)

31 52.222-12 CONTRACT TERMINATION--DEBARMENT (FEB 1988)

A breach of the contract clauses entitled Davis-Bacon Act, Contract Work Hours and Safety Standards Act--Overtime Compensation, Apprentices and Trainees, Payrolls and Basic Records, Compliance with Copeland Act Requirements, Subcontracts (Labor Standards), Compliance with Davis-Bacon and Related Act Regulations, or Certification of Eligibility may be grounds for termination of the contract, and for debarment as a Contractor and subcontractor as provided in 29 CFR 5.12.

(End of clause)

32 52.222-13 COMPLIANCE WITH DAVIS-BACON AND RELATED ACT REGULATIONS (FEB 1988)

All rulings and interpretations of the Davis-Bacon and Related Acts contained in 29 CFR Parts 1, 3, and 5 are hereby incorporated by reference in this contract.

(End of clause)

33 52.222-14 DISPUTES CONCERNING LABOR STANDARDS (FEB 1988)

The United States Department of Labor has set forth in 29 CFR Parts 5, 6, and 7 procedures for resolving disputes concerning labor standards requirements. Such disputes shall be resolved in accordance with those procedures and not the Disputes clause of this contract. Disputes within the meaning of this clause include disputes between the Contractor (or any of its subcontractors) and the contracting agency, the U.S. Department of Labor, or the employees of their representatives.

(End of clause)

34 52.222-15 CERTIFICATION OF ELIGIBILITY (FEB 1988)

(a) By entering into this contract, the Contractor certifies that neither it (nor he or she) nor any person or firm who has an interest in the Contractor's firm is a person or firm ineligible to be awarded Government contracts by virtue of section 3(a) of the Davis-Bacon Act or 29 CFR 5.12(a)(1).

(b) No part of this contract shall be subcontracted to any person or firm ineligible for award of a Government contract by virtue of section 3(a) of the Davis-Bacon Act or 29 CFR 5.12(a)(1).

(c) The penalty for making false statements is prescribed in the U.S. Criminal Code, 18 U.S.C. 1001.

(End of clause)

35 52.222-23 NOTICE OF REQUIREMENT FOR AFFIRMATIVE ACTION TO ENSURE EQUAL EMPLOYMENT OPPORTUNITY FOR CONSTRUCTION (FEB 1999)

(a) The offeror's attention is called to the Equal Opportunity clause and the Affirmative Action Compliance Requirements for Construction clause of this solicitation.

(b) The goals for minority and female participation, expressed in percentage terms for the Contractor's aggregate workforce in each trade on all construction work in the covered area, are as follows:

Goals for minority participation for each trade	Goals for female participation for each trade
6.2%	6.9%

These goals are applicable to all the Contractor's construction work performed in the covered area. If the Contractor performs construction work in a geographical area located outside of the covered area, the Contractor shall apply the goals established for the geographical area where the work is actually performed. Goals are published periodically in the Federal Register in notice form, and these notices may be obtained from any Office of Federal Contract Compliance Programs office.

(c) The Contractor's compliance with Executive Order 11246, as amended, and the regulations in 41 CFR 60-4 shall be based on (1) its implementation of the Equal Opportunity clause, (2) specific affirmative action obligations required by the clause entitled "Affirmative Action Compliance Requirements for Construction," and (3) its efforts to meet the goals. The hours of minority and female employment and training must be substantially uniform throughout the length of the contract, and in each trade. The Contractor shall make a good faith effort to employ minorities and women evenly on each of its projects. The transfer of minority or female employees or trainees from Contractor to Contractor, or from project to project, for the sole purpose of meeting the Contractor's goals shall be a violation of the contract, Executive Order 11246, as amended, and the regulations in 41 CFR 60-4. Compliance with the goals will be measured against the total work hours performed.

(d) The Contractor shall provide written notification to the Deputy Assistant Secretary for Federal Contract Compliance, U.S. Department of Labor, within 10 working days following award of any construction subcontract in excess of $10,000 at any tier for construction work under the contract resulting from this solicitation. The notification shall list the--

(1) Name, address, and telephone number of the subcontractor;
(2) Employer's identification number of the subcontractor;
(3) Estimated dollar amount of the subcontract;
(4) Estimated starting and completion dates of the subcontract; and
(5) Geographical area in which the subcontract is to be performed.

(e) As used in this Notice, and in any contract resulting from this solicitation, the "covered area" is WA/Pierce/Fort Lewis.

(End of provision)

(R 7-2003.14(d) 1978 SEP)

36 52.222-26 EQUAL OPPORTUNITY (FEB 1999)

(a) If, during any 12-month period (including the 12 months preceding the award of this contract), the Contractor has been or is awarded nonexempt Federal contracts and/or subcontracts that have an aggregate value in excess of $10,000, the Contractor shall comply with subparagraphs (b)(1) through (11) of this clause. Upon request, the Contractor shall provide information necessary to determine the applicability of this clause.

(b) During performance of this contract, the Contractor agrees as follows:

(1) The Contractor shall not discriminate against any employee or applicant for employment because of race, color, religion, sex, or national origin. However, it shall not be a violation of this clause for the Contractor to extend a publicly announced preference in employment to Indians living on or near an Indian reservation, in connection with employment opportunities on or near an Indian reservation, as permitted by 41 CFR 60-1.5.

(2) The Contractor shall take affirmative action to ensure that applicants are employed, and that employees are treated during employment, without regard to their race, color, religion, sex, or national origin. This shall include, but not be limited to, (i) employment, (ii) upgrading, (iii) demotion, (iv) transfer, (v) recruitment or recruitment advertising, (vi) layoff or termination, (vii) rates of pay or other forms of compensation, and (viii) selection for training, including apprenticeship.

(3) The Contractor shall post in conspicuous places available to employees and applicants for employment the notices to be provided by the Contracting Officer that explain this clause.

(4) The Contractor shall, in all solicitations or advertisements for employees placed by or on behalf of the Contractor, state that all qualified applicants will receive consideration for employment without regard to race, color, religion, sex, or national origin.

(5) The Contractor shall send, to each labor union or representative of workers with which it has a collective bargaining agreement or other contract or understanding, the notice to be provided by the Contracting Officer advising the labor union or workers' representative of the Contractor's commitments under this clause, and post copies of the notice in conspicuous places available to employees and applicants for employment.

(6) The Contractor shall comply with Executive Order 11246, as amended, and the rules, regulations, and orders of the Secretary of Labor.

(7) The Contractor shall furnish to the contracting agency all information required by Executive Order 11246, as amended, and by the rules, regulations, and orders of the Secretary of Labor. The

Contractor shall also file Standard Form 100 (EEO-1), or any successor form, as prescribed in 41 CFR part 60-1. Unless the Contractor has filed within the 12 months preceding the date of contract award, the Contractor shall, within 30 days after contract award, apply to either the regional Office of Federal Contract Compliance Programs (OFCCP) or the local office of the Equal Employment Opportunity Commission for the necessary forms.

(8) The Contractor shall permit access to its premises, during normal business hours, by the contracting agency or the OFCCP for the purpose of conducting on-site compliance evaluations and complaint investigations. The Contractor shall permit the Government to inspect and copy any books, accounts, records (including computerized records), and other material that may be relevant to the matter under investigation and pertinent to compliance with Executive Order 11246, as amended, and rules and regulations that implement the Executive Order.

(9) If the OFCCP determines that the Contractor is not in compliance with this clause or any rule, regulation, or order of the Secretary of Labor, this contract may be canceled, terminated, or suspended in whole or in part and the Contractor may be declared ineligible for further Government contracts, under the procedures authorized in Executive Order 11246, as amended. In addition, sanctions may be imposed and remedies invoked against the Contractor as provided in Executive Order 11246, as amended; in the rules, regulations, and orders of the Secretary of Labor; or as otherwise provided by law.

(10) The Contractor shall include the terms and conditions of subparagraphs (b)(1) through (11) of this clause in every subcontract or purchase order that is not exempted by the rules, regulations, or orders of the Secretary of Labor issued under Executive Order 11246, as amended, so that these terms and conditions will be binding upon each subcontractor or vendor.

(11) The Contractor shall take such action with respect to any subcontract or purchase order as the contracting officer may direct as a means of enforcing these terms and conditions, including sanctions for noncompliance; provided, that if the Contractor becomes involved in, or is threatened with, litigation with a subcontractor or vendor as a result of any direction, the Contractor may request the United States to enter into the litigation to protect the interests of the United States.

(c) Notwithstanding any other clause in this contract, disputes relative to this clause will be governed by the procedures in 41 CFR 60-1.1.

(End of clause)

37 52.222-27 AFFIRMATIVE ACTION COMPLIANCE REQUIREMENTS FOR CONSTRUCTION (FEB 1999)

(a) Definitions.

"Covered area," as used in this clause, means the geographical area described in the solicitation for this contract.

"Deputy Assistant Secretary," as used in this clause, means the Deputy Assistant Secretary for Federal Contract Compliance, U.S. Department of Labor, or a designee.

"Employer's identification number," as used in this clause, means the Federal Social Security number used on the employer's quarterly federal tax return, U.S. Treasury Department Form 941.

"Minority," as used in this clause, means--

(1) American Indian or Alaskan Native (all persons having origins in

any of the original peoples of North America and maintaining identifiable tribal affiliations through membership and participation or community identification).

(2) Asian and Pacific Islander (all persons having origins in any of the original peoples of the Far East, Southeast Asia, the Indian Subcontinent, or the Pacific Islands);

(3) Black (all persons having origins in any of the black African racial groups not of Hispanic origin); and

(4) Hispanic (all persons of Mexican, Puerto Rican, Cuban, Central or South American, or other Spanish culture or origin, regardless of race).

(b) If the Contractor, or a subcontractor at any tier, subcontracts a portion of the work involving any construction trade, each such subcontract in excess of $10,000 shall include this clause and the Notice containing the goals for minority and female participation stated in the solicitation for this contract.

(c) If the Contractor is participating in a Hometown Plan (41 CFR 60-4) approved by the U.S. Department of Labor in a covered area, either individually or through an association, its affirmative action obligations on all work in the plan area (including goals) shall comply with the plan for those trades that have unions participating in the plan. Contractors must be able to demonstrate participation in, and compliance with, the provisions of the plan. Each Contractor or subcontractor participating in an approved plan is also required to comply with its obligations under the Equal Opportunity clause, and to make a good faith effort to achieve each goal under the plan in each trade in which it has employees. The overall good-faith performance by other Contractors or subcontractors toward a goal in an approved plan does not excuse any Contractor's or subcontractor's failure to make good-faith efforts to achieve the plan's goals.

(d) The Contractor shall implement the affirmative action procedures in subparagraphs (g)(1) through (16) of this clause. The goals stated in the solicitation for this contract are expressed as percentages of the total hours of employment and training of minority and female utilization that the Contractor should reasonably be able to achieve in each construction trade in which it has employees in the covered area. If the Contractor performs construction work in a geographical area located outside of the covered area, it shall apply the goals established for the geographical area where that work is actually performed. The Contractor is expected to make substantially uniform progress toward its goals in each craft.

(e) Neither the terms and conditions of any collective bargaining agreement, nor the failure by a union with which the Contractor has a collective bargaining agreement, to refer minorities or women shall excuse the Contractor's obligations under this clause, Executive Order 11246, as amended, or the regulations thereunder.

(f) In order for the nonworking training hours of apprentices and trainees to be counted in meeting the goals, apprentices and trainees must be employed by the Contractor during the training period, and the Contractor must have made a commitment to employ the apprentices and trainees at the completion of their training, subject to the availability of employment opportunities. Trainees must be trained pursuant to training programs approved by the U.S. Department of Labor.

(g) The Contractor shall take affirmative action to ensure equal employment opportunity. The evaluation of the Contractor's compliance with this clause shall be based upon its effort to achieve maximum results from its actions. The Contractor shall document these efforts fully and implement affirmative action steps at least as extensive as the following:

(1) Ensure a working environment free of harassment, intimidation, and

coercion at all sites and in all facilities where the Contractor's employees are assigned to work. The Contractor, if possible, will assign two or more women to each construction project. The Contractor shall ensure that foremen, superintendents, and other onsite supervisory personnel are aware of and carry out the Contractor's obligation to maintain such a working environment, with specific attention to minority or female individuals working at these sites or facilities.

(2) Establish and maintain a current list of sources for minority and female recruitment. Provide written notification to minority and female recruitment sources and community organizations when the Contractor or its unions have employment opportunities available, and maintain a record of the organizations' responses.

(3) Establish and maintain a current file of the names, addresses, and telephone numbers of each minority and female off-the-street applicant, referrals of minorities or females from unions, recruitment sources, or community organizations, and the action taken with respect to each individual. If an individual was sent to the union hiring hall for referral and not referred back to the Contractor by the union or, if referred back, not employed by the Contractor, this shall be documented in the file, along with whatever additional actions the Contractor may have taken.

(4) Immediately notify the Deputy Assistant Secretary when the union or unions with which the Contractor has a collective bargaining agreement has not referred back to the Contractor a a minority or woman sent by the Contractor, or when the Contractor has other information that the union referral process has impeded the Contractor's efforts to meet its obligations.

(5) Develop on-the-job training opportunities and/or participate in training programs for the area that expressly include minorities and women, including upgrading programs and apprenticeship and trainee programs relevant to the Contractor's employment needs, especially those programs funded or approved by the Department of Labor. The Contractor shall provide notice of these programs to the sources compiled under subparagraph (g)(2) of this clause.

(6) Disseminate the Contractor's equal employment policy by--

(i) Providing notice of the policy to unions and to training, recruitment, and outreach programs, and requesting their cooperation in assisting the Contractor in meeting its contract obligations;

(ii) Including the policy in any policy manual and in collective bargaining agreements;

(iii) Publicizing the policy in the company newspaper, annual report, etc.;

(iv) Reviewing the policy with all management personnel and with all minority and female employees at least once a year; and

(v) Posting the policy on bulletin boards accessible to employees at each location where construction work is performed.

(7) Review, at least annually, the Contractor's equal employment policy and affirmative action obligations with all employees having responsibility for hiring, assignment, layoff, termination, or other employment decisions. Conduct review of this policy with all on-site supervisory personnel before initiating construction work at a job site. A written record shall be made and maintained identifying the time and place of these meetings, persons attending, subject matter discussed, and disposition of the subject matter.

(8) Disseminate the Contractor's equal employment policy externally by including it in any advertising in the news media, specifically including minority and female news media. Provide written notification

to, and discuss this policy with, other Contractors and subcontractors with which the Contractor does or anticipates doing business.

(9) Direct recruitment efforts, both oral and written, to minority, female, and community organizations, to schools with minority and female students, and to minority and female recruitment and training organizations serving the Contractor's recruitment area and employment needs. Not later than 1 month before the date for acceptance of applications for apprenticeship or training by any recruitment source, send written notification to organizations such as the above, describing the openings, screening procedures, and tests to be used in the selection process.

(10) Encourage present minority and female employees to recruit minority persons and women. Where reasonable, provide after-school, summer, and vacation employment to minority and female youth both on the site and in other areas of the Contractor's workforce.

(11) Validate all tests and other selection requirements where required under 41 CFR 60-3.

(12) Conduct, at least annually, an inventory and evaluation at least of all minority and female personnel for promotional opportunities. Encourage these employees to seek or to prepare for, through appropriate training, etc., opportunities for promotion.

(13) Ensure that seniority practices job classifications, work assignments, and other personnel practices do not have a discriminatory effect by continually monitoring all personnel and employment-related activities to ensure that the Contractor's obligations under this contract are being carried out.

(14) Ensure that all facilities and company activities are nonsegregated except that separate or single-user rest rooms and necessary dressing or sleeping areas shall be provided to assure privacy between the sexes.

(15) Maintain a record of solicitations for subcontracts for minority and female construction contractors and suppliers, including circulation of solicitations to minority and female contractor associations and other business associations.

(16) Conduct a review, at least annually, of all supervisors' adherence to and performance under the Contractor's equal employment policy and affirmative action obligations.

(h) The Contractor is encouraged to participate in voluntary associations that may assist in fulfilling one or more of the affirmative action obligations contained in subparagraphs (g)(1) through (16) of this clause. The efforts of a contractor association, joint contractor-union, contractor-community, or similar group of which the contractor is a member and participant may be asserted as fulfilling one or more of its obligations under subparagraphs (g)(1) through (16) of this clause, provided the Contractor--

(1) Actively participates in the group;

(2) Makes every effort to ensure that the group has a positive impact on the employment of minorities and women in the industry;

(3) Ensures that concrete benefits of the program are reflected in the Contractor's minority and female workforce participation;

(4) Makes a good-faith effort to meet its individual goals and timetables; and

(5) Can provide access to documentation that demonstrates the effectiveness of actions taken on behalf of the Contractor. The obligation to comply is the Contractor's, and failure of such a group to fulfill an obligation shall not be a defense for the Contractor's noncompliance.

(i) A single goal for minorities and a separate single goal for women shall be established. The Contractor is required to provide equal employment opportunity and to take affirmative action for all minority groups, both male and female, and all women, both minority and nonminority. Consequently, the Contractor may be in violation of Executive Order 11246, as amended, if a particular group is employed in a substantially disparate manner.

(j) The Contractor shall not use goals or affirmative action standards to discriminate against any person because of race, color, religion, sex, or national origin.

(k) The Contractor shall not enter into any subcontract with any person or firm debarred from Government contracts under Executive Order 11246, as amended.

(l) The Contractor shall carry out such sanctions and penalties for violation of this clause and of the Equal Opportunity clause, including suspension, termination, and cancellation of existing subcontracts, as may be imposed or ordered under Executive Order 11246, as amended, and its implementing regulations, by the OFCCP. Any failure to carry out these sanctions and penalties as ordered shall be a violation of this clause and Executive Order 11246, as amended.

(m) The Contractor in fulfilling its obligations under this clause shall implement affirmative action procedures at least as extensive as those prescribed in paragraph (g) of this clause, so as to achieve maximum results from its efforts to ensure equal employment opportunity. If the Contractor fails to comply with the requirements of Executive Order 11246, as amended, the implementing regulations, or this clause, the Deputy Assistant Secretary shall take action as prescribed in 41 CFR 60-4.8.

(n) The Contractor shall designate a responsible official to--

(1) Monitor all employment-related activity to ensure that the Contractor's equal employment policy is being carried out;

(2) Submit reports as may be required by the Government; and

(3) Keep records that shall at least include for each employee the name, address, telephone number, construction trade, union affiliation (if any), employee identification number, social security number, race, sex, status (e.g., mechanic, apprentice, trainee, helper, or laborer), dates of changes in status, hours worked per week in the indicated trade, rate of pay, and locations at which the work was performed. Records shall be maintained in an easily understandable and retrievable form; however, to the degree that existing records satisfy this requirement, separate records are not required to be maintained.

(o) Nothing contained herein shall be construed as a limitation upon the application of other laws that establish different standards of compliance or upon the requirements for the hiring of local or other area residents (e.g., those under the Public Works Employment Act of 1977 and the Community Development Block Grant Program).

(End of clause)

38 52.222-35 AFFIRMATIVE ACTION FOR DISABLED VETERANS AND VETERANS OF THE VIETNAM ERA (APR 1998)

(a) Definitions. As used in this clause--

"All employment openings" includes all positions except executive and top management, those positions that will be filled from within the contractor's organization, and positions lasting 3 days or less. This term includes full-time employment, temporary employment of more than 3 days' duration, and part-time employment.

"Appropriate office of the State employment service system" means the local office of the Federal-State national system of public employment offices with assigned responsibility to serve the area where the employment opening is to be filled, including the District of Columbia, Guam, the Commonwealth of Puerto Rico, and the Virgin Islands.

"Positions that will be filled from within the Contractor's organization" means employment openings for which no consideration will be given to persons outside the Contractor's organization (including any affiliates, subsidiaries, and parent companies) and includes any openings that the Contractor proposes to fill from regularly established "recall" lists. The exception does not apply to a particular opening once an employer decides to consider applicants outside of its organization.

"Veteran of the Vietnam era" means a person who--

(1) Served on active duty for a period of more than 180 days, any part of which occurred between August 5, 1964, and May 7, 1975, and was discharged or released therefrom with other than a dishonorable discharge; or

(2) Was discharged or released from active duty for a service-connected disability if any part of such active duty was performed between August 5, 1964, and May 7, 1975.

(b) General. (1) Regarding any position for which the employee or applicant for employment is qualified, the Contractor shall not discriminate against the individual because the individual is a disabled veteran or a veteran of the Vietnam era. The Contractor agrees to take affirmative action to employ, advance in employment, and otherwise treat qualified disabled veterans and veterans of the Vietnam era without discrimination based upon their disability or veterans' status in all employment practices such as--

(i) Employment;
(ii) Upgrading;
(iii) Demotion or transfer;
(iv) Recruitment;
(v) Advertising;
(vi) Layoff or termination;
(vii) Rates of pay or other forms of compensation; and
(viii) Selection for training, including apprenticeship.

(2) The Contractor agrees to comply with the rules, regulations, and relevant orders of the Secretary of Labor (Secretary) issued under the Vietnam Era Veterans' Readjustment Assistance Act of 1972 (the Act), as amended.

(c) Listing openings. (1) The Contractor agrees to list all employment openings existing at contract award or occurring during contract performance, at an appropriate office of the State employment service system in the locality where the opening occurs. These openings include those occurring at any Contractor facility, including one not connected with performing this contract. An independent corporate affiliate is exempt from this requirement.

(2) State and local government agencies holding Federal contracts of $10,000 or more shall also list all employment openings with the appropriate office of the State employment service.

(3) The listing of employment openings with the State employment service system is required at least concurrently with using any other recruitment source or effort and involves the obligations of placing a bona fide job order, including accepting referrals of veterans and nonveterans. This listing does not require hiring any particular

job applicant or hiring from any particular group of job applicants and is not intended to relieve the Contractor from any requirements of Executive orders or regulations concerning nondiscrimination in employment.

(4) Whenever the Contractor becomes contractually bound to the listing terms of this clause, it shall advise the State employment service system, in each State where it has establishments, of the name and location of each hiring location in the State. As long as the Contractor is contractually bound to these terms and has so advised the State system, it need not advise the State system of subsequent contracts. The Contractor may advise the State system when it is no longer bound by this contract clause.

(d) Applicability. This clause does not apply to the listing of employment openings that occur and are filled outside the 50 States, the District of Columbia, the Commonwealth of Puerto Rico, Guam, and the Virgin Islands.

(e) Postings. (1) The Contractor agrees to post employment notices stating (i) the Contractor's obligation under the law to take affirmative action to employ and advance in employment qualified disabled veterans and veterans of the Vietnam era, and (ii) the rights of applicants and employees.

(2) These notices shall be posted in conspicuous places that are available to employees and applicants for employment. They shall be in a form prescribed by the Deputy Assistant Secretary for Federal Contract Compliance Programs, Department of Labor (Deputy Assistant Secretary), and provided by or through the Contracting Officer.

(3) The Contractor shall notify each labor union or representative of workers with which it has a collective bargaining agreement or other contract understanding, that the Contractor is bound by the terms of the Act, and is committed to take affirmative action to employ, and advance in employment, qualified disabled veterans and veterans of the Vietnam era.

(f) Noncompliance. If the Contractor does not comply with the requirements of this clause, appropriate actions may be taken under the rules, regulations, and relevant orders of the Secretary issued pursuant to the Act.

(g) Subcontracts. The Contractor shall include the terms of this clause in every subcontract or purchase order of $10,000 or more unless exempted by rules, regulations, or orders of the Secretary. The Contractor shall act as specified by the Deputy Assistant Secretary to enforce the terms, including action for noncompliance.

(End of clause)

39 52.222-36 AFFIRMATIVE ACTION FOR WORKERS WITH DISABILITIES (JUN 1998)

(a) General. (1) Regarding any position for which the employee or applicant for employment is qualified, the Contractor shall not discriminate against any employee or applicant because of physical or mental disability. The Contractor agrees to take affirmative action to employ, advance in employment, and otherwise treat qualified individuals with disabilities without discrimination based upon their physical or mental disability in all employment practices such as--

(i) Recruitment, advertising, and job application procedures;

(ii) Hiring, upgrading, promotion, award of tenure, demotion,

transfer, layoff, termination, right of return from layoff, and rehiring;

(iii) Rates of pay or any other form of compensation and changes in compensation;

(iv) Job assignments, job classifications, organizational structures, position descriptions, lines of progression, and seniority lists;

(v) Leaves of absence, sick leave, or any other leave;

(vi) Fringe benefits available by virtue of employment, whether or not administered by the Contractor;

(vii) Selection and financial support for training, including apprenticeships, professional meetings, conferences, and other related activities, and selection for leaves of absence to pursue training;

(viii) Activities sponsored by the Contractor, including social or recreational programs; and

(ix) Any other term, condition, or privilege of employment.

(2) The Contractor agrees to comply with the rules, regulations, and relevant orders of the Secretary of Labor (Secretary) issued under the Rehabilitation Act of 1973 (29 U.S.C. 793) (the Act), as amended.

(b) Postings. (1) The Contractor agrees to post employment notices stating--

(i) The Contractor's obligation under the law to take affirmative action to employ and advance in employment qualified individuals with disabilities; and

(ii) The rights of applicants and employees.

(2) These notices shall be posted in conspicuous places that are available to employees and applicants for employment. The Contractor shall ensure that applicants and employees with disabilities are informed of the contents of the notice (e.g., the Contractor may have the notice read to a visually disabled individual, or may lower the posted notice so that it might be read by a person in a wheelchair). The notices shall be in a form prescribed by the Deputy Assistant Secretary for Federal Contract Compliance of the U.S. Department of Labor (Deputy Assistant Secretary) and shall be provided by or through the Contracting Officer.

(3) The Contractor shall notify each labor union or representative of workers with which it has a collective bargaining agreement or other contract understanding, that the Contractor is bound by the terms of Section 503 of the Act and is committed to take affirmative action to employ, and advance in employment, qualified individuals with physical or mental disabilities.

(c) Noncompliance. If the Contractor does not comply with the requirements of this clause, appropriate actions may be taken under the rules, regulations, and relevant orders of the Secretary issued pursuant to the Act.

(d) Subcontracts. The Contractor shall include the terms of this clause in every subcontract or purchase order in excess of $10,000 unless exempted by rules, regulations, or orders of the Secretary. The Contractor shall act as specified by the Deputy Assistant Secretary to enforce the terms, including action for noncompliance.

(End of clause)

40 52.222-37 EMPLOYMENT REPORTS ON DISABLED VETERANS AND VETERANS OF THE VIETNAM ERA (JAN 1999)

(a) Unless the Contractor is a State or local government agency, the Contractor shall report at least annually, as required by the Secretary of Labor, on--

(1) The number of disabled veterans and the number of veterans of the Vietnam era in the workforce of the Contractor by job category and hiring location; and

(2) The total number of new employees hired during the period covered by the report, and of that total, the number of disabled veterans, and the number of veterans of the Vietnam era.

(b) The above items shall be reported by completing the form entitled "Federal Contractor Veterans' Employment Report VETS-100."

(c) Reports shall be submitted no later than September 30 of each year beginning September 30, 1988.

(d) The employment activity report required by paragraph (a)(2) of this clause shall reflect total hires during the most recent 12-month period as of the ending date selected for the employment profile report required by paragraph (a)(1) of this clause. Contractors may select an ending date: (1) As of the end of any pay period during the period January through March 1st of the year the report is due, or (2) as of December 31, if the contractor has previous written approval from the Equal Employment Opportunity Commission to do so for purposes of submitting the Employer Information Report EEO-1 (Standard Form 100).

(e) The count of veterans reported according to paragraph (a) of this clause shall be based on voluntary disclosure. Each Contractor subject to the reporting requirements at 38 U.S.C. 4212 shall invite all disabled veterans and veterans of the Vietnam era who wish to benefit under the affirmative action program at 38 U.S.C. 4212 to identify themselves to the Contractor. The invitation shall state that the information is voluntarily provided; that the information will be kept confidential; that disclosure or refusal to provide the information will not subject the applicant or employee to any adverse treatment; and that the information will be used only in accordance with the regulations promulgated under 38 U.S.C. 4212.

(f) Subcontracts. The Contractor shall include the terms of this clause in every subcontract or purchase order of $10,000 or more unless exempted by rules, regulations, or orders of the Secretary.

(End of clause)

41 52.223-2 CLEAN AIR AND WATER (APR 1984)

(a) "Air Act", as used in this clause, means the Clean Air Act (42 U.S.C. 7401, et seq.).

"Clean air standards," as used in this clause, means--

(1) Any enforceable rules, regulations, guidelines, standards, limitations, orders, controls, prohibitions, work practices, or other requirements contained in, issued under, or otherwise adopted under the Air Act or Executive Order 11738;

(2) An applicable implementation plan as described in section 110(d) of the Air Act (42 U.S.C. 7410(d));

(3) An approved implementation procedure or plan under section 111(c) or section 111(d) of the Air Act (42 U.S.C. 7411(c) or (d)); or

(4) An approved implementation procedure under section 112(d) of the Air Act (42 U.S.C. 7412(d)).

"Clean water standards," as used in this clause, means any enforceable limitation, control, condition, prohibition, standard, or other requirement promulgated under the Water Act or contained in a permit issued to a discharger by the EPA or by a State under an approved program, as authorized by section 402 of the Water Act (33 U.S.C. 1342), or by local government to ensure compliance with pretreatment regulations as required by section 307 of the Water Act (33 U.S.C. 1317).

"Compliance," as used in this clause, means compliance with--

(1) Clean air or water standards; or

(2) A schedule or plan ordered or approved by a court of competent jurisdiction, the EPA, or an air or water pollution control agency under the requirements of the Air Act or Water Act and related regulations.

"Facility," as used in this clause, means any building, plant, installation, structure, mine, vessel or other floating craft, location, or site of operations, owned, leased, or supervised by a Contractor or subcontractor, used in the performance of a contract or subcontract. When a location or site of operations includes more than one building, plant, installation, or structure, the entire location or site shall be deemed a facility except when the Administrator, or a designee, of the EPA determines that independent facilities are collocated in one geographical area.

"Water Act," as used in this clause, means Clean Water Act (33 U.S.C. 1251, et seq.).

(b) The Contractor agrees--

(1) To comply with all the requirements of section 114 of the Clean Air Act (42 U.S.C. 7414) and section 308 of the Clean Water Act (33 U.S.C. 1318) relating to inspection, monitoring, entry, reports, and information, as well as other requirements specified in section 114 and section 308 of the Air Act and the Water Act, and all regulations and guidelines issued to implement those acts before the award of this contract;

(2) That no portion of the work required by this prime contract will be performed in a facility listed on the EPA List of Violating Facilities on the date when this contract was awarded unless and until the EPA eliminates the name of the facility from the listing;

(3) To use best efforts to comply with clean air standards and clean water standards at the facility in which the contract is being performed; and

(4) To insert the substance of this clause into any nonexempt subcontract, including this subparagraph (b)(4).

(End of clause)

(R 7-103.29 1975 OCT)

(R 1-1.2302)

42 52.223-3 HAZARDOUS MATERIAL IDENTIFICATION AND MATERIAL SAFETY DATA (JAN 1997)

(a) "Hazardous material," as used in this clause, includes any material defined as hazardous under the latest version of Federal Standard No. 313 (including revisions adopted during the term of the contract).

(b) The Offeror must list any hazardous material, as defined in paragraph (a) of this clause, to be delivered under this contract. The hazardous material shall be properly identified and include any applicable identification number, such as National Stock Number or Special Item Number. This information shall also be included on the Material Safety Data Sheet submitted under this contract.

Material	Identification No. (If none, insert None)

(c) This list must be updated during performance of the contract whenever the Contractor determines that any other material to be delivered under this contract is hazardous.

(d) The apparently successful Offeror agrees to submit, for each item as required prior to award, a Material Safety Data Sheet, meeting the requirements of 29 CFR 1910.1200(g) and the latest version of Federal Standard No. 313, for all hazardous material identified in paragraph (b) of this clause. Data shall be submitted in accordance with Federal Standard No. 313, whether or not the apparently successful Offeror is the actual manufacturer of these items. Failure to submit the Material Safety Data Sheet prior to award may result in the apparently successful Offeror being considered nonresponsible and ineligible for award.

(e) If, after award, there is a change in the composition of the item(s) or a revision to Federal Standard No. 313, which renders incomplete or inaccurate the data submitted under paragraph (d) of this clause, the Contractor shall promptly notify the Contracting Officer and resubmit the data.

(f) Neither the requirements of this clause nor any act or failure to act by the Government shall relieve the Contractor of any responsibility or liability for the safety of Government, Contractor, or subcontractor personnel or property.

(g) Nothing contained in this clause shall relieve the Contractor from complying with applicable Federal, State, and local laws, codes, ordinances, and regulations (including the obtaining of licenses and permits) in connection with hazardous material.

(h) The Government's rights in data furnished under this contract with respect to hazardous material are as follows:

(1) To use, duplicate and disclose any data to which this clause is applicable. The purposes of this right are to--

(i) Apprise personnel of the hazards to which they may be exposed in using, handling, packaging, transporting, or disposing of hazardous materials;

(ii) Obtain medical treatment for those affected by the material; and

(iii) Have others use, duplicate, and disclose the data for the Government for these purposes.

(2) To use, duplicate, and disclose data furnished under this clause, in accordance with subparagraph (h)(1) of this clause, in precedence over any other clause of this contract providing for rights in data.

(3) The Government is not precluded from using similar or data acquired from other sources.

(End of clause)

43 52.223-6 DRUG-FREE WORKPLACE (JAN 1997)

(a) Definitions. As used in this clause--

"Controlled substance" means a controlled substance in schedules I through V of section 202 of the Controlled Substances Act (21 U.S.C. 812) and as further defined in regulation at 21 CFR 1308.11 - 1308.15.

"Conviction" means a finding of guilt (including a plea of nolo contendere) or imposition of sentence, or both, by any judicial body charged with the responsibility to determine violations of the Federal or State criminal drug statutes.

"Criminal drug statute" means a Federal or non-Federal criminal statute involving the manufacture, distribution, dispensing, possession or use of any controlled substance.

"Drug-free workplace" means the site(s) for the performance of work done by the Contractor in connection with a specific contract at which employees of the Contractor are prohibited from engaging in the unlawful manufacture, distribution, dispensing, possession, or use of a controlled substance.

"Employee" means an employee of a Contractor directly engaged in the performance of work under a Government contract. "Directly engaged" is defined to include all direct cost employees and any other Contractor employee who has other than a minimal impact or involvement in contract performance.

"Individual" means an offeror/contractor that has no more than one employee including the offeror/contractor.

(b) The Contractor, if other than an individual, shall--within 30 days after award (unless a longer period is agreed to in writing for contracts of 30 days or more performance duration), or as soon as possible for contracts of less than 30 days performance duration--

(1) Publish a statement notifying its employees that the unlawful manufacture, distribution, dispensing, possession, or use of a controlled substance is prohibited in the Contractor's workplace and specifying the actions that will be taken against employees for violations of such prohibition;

(2) Establish an ongoing drug-free awareness program to inform such employees about--

(i) The dangers of drug abuse in the workplace;

(ii) The Contractor's policy of maintaining a drug-free workplace;

(iii) Any available drug counseling, rehabilitation, and employee assistance programs; and

(iv) The penalties that may be imposed upon employees for drug abuse violations occurring in the workplace;

(3) Provide all employees engaged in performance of the contract with a copy of the statement required by subparagraph (b)(1) of this clause;

(4) Notify such employees in writing in the statement required by subparagraph (b)(1) of this clause that, as a condition of continued employment on this contract, the employee will--

(i) Abide by the terms of the statement; and

(ii) Notify the employer in writing of the employee's conviction under a criminal drug statute for a violation occurring in the workplace no later than 5 days after such conviction.

(5) Notify the Contracting Officer in writing within 10 days after receiving notice under subdivision (b)(4)(ii) of this clause, from

an employee or otherwise receiving actual notice of such conviction. The notice shall include the position title of the employee;

(6) Within 30 days after receiving notice under subdivision (b)(4)(ii) of this clause of a conviction, take one of the following actions with respect to any employee who is convicted of a drug abuse violation occurring in the workplace:

(i) Taking appropriate personnel action against such employee, up to and including termination; or

(ii) Require such employee to satisfactorily participate in a drug abuse assistance or rehabilitation program approved for such purposes by a Federal, State, or local health, law enforcement, or other appropriate agency, and

(7) Make a good faith effort to maintain a drug-free workplace through implementation of subparagraphs (b)(1) through (b)(6) of this clause.

(c) The Contractor, if an individual, agrees by award of the contract or acceptance of a purchase order, not to engage in the unlawful manufacture, distribution, dispensing, possession, or use of a controlled substance while performing this contract.

(d) In addition to other remedies available to the Government, the Contractor's failure to comply with the requirements of paragraph (b) or (c) of this clause may, pursuant to FAR 23.506, render the Contractor subject to suspension of contract payments, termination of the contract for default, and suspension or debarment.

(End of clause)

44 52.223-14 TOXIC CHEMICAL RELEASE REPORTING (OCT 1996)

(a) Unless otherwise exempt, the Contractor, as owner or operator of a facility used in the performance of this contract, shall file by July 1 for the prior calendar year an annual Toxic Chemical Release Inventory Form (Form R) as described in sections 313(a) and (g) of the Emergency Planning and Community Right-to-Know Act of 1986 (EPCRA) (42 U.S.C. 11023(a) and (g)), and section 6607 of the Pollution Prevention Act of 1990 (PPA) (42 U.S.C. 13106). The Contractor shall file, for each facility subject to the Form R filing and reporting requirements, the annual Form R throughout the life of the contract.

(b) A Contractor owned or operated facility used in the performance of this contract is exempt from the requirement to file an annual Form R if--

(1) The facility does not manufacture, process, or otherwise use any toxic chemicals listed under section 313(c) of EPCRA, 42 U.S.C. 11023(c);

(2) The facility does not have 10 or more full-time employees as specified in section 313(b)(1)(A) of EPCRA, 42 U.S.C. 11023(b)(1)(A);

(3) The facility does not meet the reporting thresholds of toxic chemicals established under section 313(f) of EPCRA, 42 U.S.C. 11023(f) (including the alternate thresholds at 40 CFR 372.27, provided an appropriate certification form has been filed with EPA);

(4) The facility does not fall within Standard Industrial Classification Code (SIC) designations 20 through 39 as set forth in Section 19.102 of the Federal Acquisition Regulation (FAR); or

(5) The facility is not located within any State of the United States, the District of Columbia, the Commonwealth of Puerto Rico, Guam, American Samoa, the United States Virgin Islands, the Northern Mariana Islands, or any other territory or possession over which the United States has jurisdiction.

(c) If the Contractor has certified to an exemption in accordance with

one or more of the criteria in paragraph (b) of this clause, and after award of the contract circumstances change so that any of its owned or operated facilities used in the performance of this contract is no longer exempt--

(1) The Contractor shall notify the Contracting Officer; and

(2) The Contractor, as owner or operator of a facility used in the performance of this contract that is no longer exempt, shall (i) submit a Toxic Chemical Release Inventory Form (Form R) on or before July 1 for the prior calendar year during which the facility becomes eligible; and (ii) continue to file the annual Form R for the life of the contract for such facility.

(d) The Contracting Officer may terminate this contract or take other action as appropriate, if the Contractor fails to comply accurately and fully with the EPCRA and PPA toxic chemical release filing and reporting requirements.

(e) Except for acquisitions of commercial items as defined in FAR Part 2, the Contractor shall--

(1) For competitive subcontracts expected to exceed $100,000 (including all options), include a solicitation provision substantially the same as the provision at FAR 52.223-13, Certification of Toxic Chemical Release Reporting; and

(2) Include in any resultant subcontract exceeding $100,000 (including all options), the substance of this clause, except this paragraph (e).

(End of clause)

45 52.223-7001 HAZARD WARNING LABELS (DEC 1991)

(a) "Hazardous material," as used in this clause, is defined in the Hazardous Material Identification and Material Safety Data clause of this contract.

(b) The Contractor shall label the item package (unit container) of any hazardous material to be delivered under this contract in accordance with the Hazard Communication Standard (29 CFR 1910.1200 et seq.). The Standard requires that the hazard warning label conform to the requirements of the standard unless the material is otherwise subject to the labelling requirements of one of the following statutes:

(1) Federal Insecticide, Fungicide and Rodenticide Act;

(2) Federal Food, Drug and Cosmetics Act;

(3) Consumer Product Safety Act;

(4) Federal Hazardous Substances Act; or

(5) Federal Alcohol Administration Act.

(c) The Offeror shall list which hazardous material listed in the Hazardous Material Identification and Material Safety Data clause of this contract will be labelled in accordance with one of the Acts in paragraphs (b)(1) through (5) of this clause instead of the Hazard Communication Standard. Any hazardous material not listed will be interpreted to mean that a label is required in accordance with the Hazard Communication Standard.

Material (if none, insert "none.")	Act
_____	_____
_____	_____

(d) The apparently successful Offeror agrees to submit, before award, a

copy of the hazard warning label for all hazardous materials not listed in paragraph (c) of this clause. The Offeror shall submit the label with the Material Safety Data Sheet being furnished under the Hazardous Material Identification and Material Safety Data clause of this contract.

(e) The Contractor shall also comply with MIL-STD-129, Marking for Shipment and Storage (including revisions adopted during the term of this contract).

(End of clause)

46 52.223-7004 DRUG-FREE WORK FORCE (SEP 1988)

(a) Definitions.

(1) "Employee in a sensitive position," as used in this clause, means an employee who has been granted access to classified information; or employees in other positions that the Contractor determines involve national security, health or safety, or functions other than the foregoing requiring a high degree of trust and confidence.

(2) "Illegal drugs," as used in this clause, means controlled substances included in Schedules I and II, as defined by section 802(6) of Title 21 of the United States Code, the possession of which is unlawful under Chapter 13 of that Title. The term "illegal drugs" does not mean the use of a controlled substance pursuant to a valid prescription or other uses authorized by law.

(b) The Contractor agrees to institute and maintain a program for achieving the objective of a drug-free work force. While this clause defines criteria for such a program, contractors are encouraged to implement alternative approaches comparable to the criteria in paragraph (c) that are designed to achieve the objectives of this clause.

(c) Contractor programs shall include the following, or appropriate alternatives:

(1) Employee assistance programs emphasizing high level direction, education, counseling, rehabilitation, and coordination with available community resources;

(2) Supervisory training to assist in identifying and addressing illegal drug use by Contractor employees;

(3) Provision for self-referrals as well as supervisory referrals to treatment with maximum respect for individual confidentiality consistent with safety and security issues;

(4) Provision for identifying illegal drug users, including testing on a controlled and carefully monitored basis. Employee drug testing programs shall be established taking account of the following:

(i) The Contractor shall establish a program that provides for testing for the use of illegal drugs by employees in sensitive positions. The extent of and criteria for such testing shall be determined by the Contractor based on considerations that include the nature of the work being performed under the contract, the employee's duties, the efficient use of Contractor resources, and the risks to health, safety, or national security that could result from the failure of an employee adequately to discharge his or her position.

(ii) In addition, the Contractor may establish a program for employee drug testing--

(A) When there is a reasonable suspicion that an employee uses illegal drugs; or

(B) When an employee has been involved in an accident or unsafe practice;

(C) As part of or as a follow-up to counseling or rehabilitation

for illegal drug use;

(D) As part of a voluntary employee drug testing program.

(iii) The Contractor may establish a program to test applicants for employment for illegal drug use.

(iv) For the purpose of administering this clause, testing for illegal drugs may be limited to those substances for which testing is prescribed by section 2.1 of Subpart B of the "Mandatory Guidelines for Federal Workplace Drug Testing Programs" (53 FR 11980 (April 11 1988)), issued by the Department of Health and Human Services.

(d) Contractors shall adopt appropriate personnel procedures to deal with employees who are found to be using drugs illegally. Contractors shall not allow any employee to remain on duty or perform in a sensitive position who is found to use illegal drugs until such time as the Contractor, in accordance with procedures established by the Contractor, determines that the employee may perform in such a position.

(e) The provisions of this clause pertaining to drug testing programs shall not apply to the extent they are inconsistent with state or local law, or with an existing collective bargaining agreement; provided that with respect to the latter, the Contractor agrees that those issues that are in conflict will be a subject of negotiation at the next collective bargaining session.

(End of clause)

47 52.225-5 BUY AMERICAN ACT--CONSTRUCTION MATERIALS (JUN 1997)

(a) The Buy American Act (41 U.S.C. 10) provides that the Government give preference to domestic construction material.

"Components," means those articles, materials, and supplies incorporated directly into construction materials.

"Construction materials," means an article, material, or supply brought to the construction site for incorporation into the building or work. Construction material also includes an item brought to the site pre-assembled from articles, materials or supplies. However, emergency life safety systems, such as emergency lighting, fire alarm, and audio evacuation systems, which are discrete systems incorporated into a public building or work and which are produced as a complete system, shall be evaluated as a single and distinct construction material regardless of when or how the individual parts or components of such systems are delivered to the construction site.

"Domestic construction material," means (1) an unmanufactured construction material mined or produced in the United States, or (2) a construction material manufactured in the United States, if the cost of its components mined, produced, or manufactured in the United States exceeds 50 percent of the cost of all its components. Components of foreign origin of the same class or kind as the construction materials determined to be unavailable pursuant to subparagraph 25.202(a)(2) of the Federal Acquisition Regulation (FAR) shall be treated as domestic.

(b)(1) The Buy American Act (41 U.S.C. 10a-10d) requires that only domestic construction material be used in performing this contract, except as provided in paragraphs (b)(2) and (b)(3) of this clause.

(2) This requirement does not apply to the excepted construction material or components listed by the Government as follows:

%%Insert list of applicable accepted materials or indicate "none"

none

(3) Other foreign construction material may be added to the list in paragraph (b)(2) of this clause if the Government determines that--

(i) The cost would be unreasonable (the cost of a particular domestic construction material shall be determined to be unreasonable when the cost of such material exceeds the cost of foreign material by more than 6 percent, unless the agency head determines a higher percentage to be appropriate);

(ii) The application of the restriction of the Buy American Act to a particular construction material would be impracticable or inconsistent with the public interest; or

(iii) The construction material is not mined, produced, or manufactured in the United States in sufficient and reasonably available commercial quantities of a satisfactory quality.

(4) The Contractor agrees that only domestic construction material will be used by the Contractor, subcontractors, material men, and suppliers in the performance of this contract, except for foreign construction materials, if any, listed in paragraph (b)(2) of this clause.

(c) Request for determination. (1) Contractors requesting to use foreign construction material under paragraph (b)(3) of this clause shall provide adequate information for Government evaluation of the request for a determination regarding the inapplicability of the Buy American Act. Each submission shall include a description of the foreign and domestic construction materials, including unit of measure, quantity, price, time of delivery or availability, location of the construction project, name and address of the proposed contractor, and a detailed justification of the reason for use of foreign materials cited in accordance with paragraph (b)(3) of this clause. A submission based on unreasonable cost shall include a reasonable survey of the market and a completed price comparison table in the format in paragraph (d) of this clause. The price of construction material shall include all delivery costs to the construction site and any applicable duty (whether or not a duty-free certificate may be issued).

(2) If the Government determines after contract award that an exception to the Buy American Act applies, the contract shall be modified to allow use of the foreign construction material, and adequate consideration shall be negotiated. However, when the basis for the exception is the unreasonable price of a domestic construction material, adequate consideration shall not be less than the differential established in paragraph (b)(3)(i) of this clause.

(3) If the Government does not determine that an exception to the Buy American Act applies, the use of that particular foreign construction material will be a failure to comply with the Act.

(d) For evaluation of requests under paragraph (c) of this clause based on unreasonable cost, the following information and any applicable supporting data based on the survey of suppliers shall be included in the request:

Foreign and Domestic Construction Materials Price Comparison

Construction material description	Unit of measure	Quantity	Price (dollars) +
Item 1:			
Foreign construction material.....	.....	.....	.....
Domestic construction material.....	.....	.....	.....
Item 2:			
Foreign construction material.....	.....	.....	.....
Domestic construction material.....	.....	.....	.....

List name, address, telephone number, and contact for suppliers surveyed. Attach copy of response; if oral, attach summary. Include other applicable supporting information.

+ Include all delivery costs to the construction site and any applicable duty (whether or not a duty-free entry certificate is issued).

(End of clause)

48 52.225-11 RESTRICTIONS ON CERTAIN FOREIGN PURCHASES (AUG 1998)

(a) Unless advance written approval of the Contracting Officer is obtained, the Contractor shall not acquire, for use in the performance of this contract, any supplies or services originating from sources within, or that were located in or transported from or through, countries whose products are banned from importation into the United States by Executive order or regulations of the Office of Foreign Assets Control, Department of the Treasury. Those countries include Cuba, Iran, Iraq, Libya, North Korea, and Sudan.

(b) The Contractor shall not acquire for use in the performance of this contract any supplies or services from entities controlled by the Government of Iraq.

(c) The Contractor agrees to insert the provisions of this clause, including this paragraph (c), in all subcontracts hereunder.

(End of clause)

49 52.225-15 BUY AMERICAN ACT--CONSTRUCTION MATERIALS UNDER TRADE AGREEMENTS ACT AND NORTH AMERICAN FREE TRADE AGREEMENT (JUN 1997)

(a) Definitions. As used in this clause--

"Components" means those articles, materials, and supplies incorporated directly into construction materials.

"Construction material" means an article, material, or supply brought to the construction site for incorporation into the building or work. Construction material also includes an item brought to the site pre-assembled from articles, materials, or supplies. However, emergency life safety systems, such as emergency lighting, fire alarm, and audio evacuation systems, which are discrete systems incorporated into a public building or work and which are produced as a complete system, shall be evaluated as a single and distinct construction material regardless of when or how the individual parts or components of such systems are delivered to the construction site.

"Designated country construction material" means a construction material that (a) is wholly the growth, product, or manufacture of a designated

country (as defined at FAR 25.401), or (b) in the case of a construction material which consists in whole or in part of materials from another country or instrumentality, has been substantially transformed in a designated country into a new and different construction material distinct from the materials from which it was transformed.

"Domestic construction material" means (l) an unmanufactured construction material mined or produced in the United States, or (2) a construction material manufactured in the United States, if the cost of its components mined, produced, or manufactured in the United States exceeds 50 percent of the cost of all its components. Components of foreign origin of the same class or kind as the construction materials determined to be unavailable pursuant to subparagraph 25.202(a)(2) of the Federal Acquisition Regulation (FAR) shall be treated as domestic.

"North American Free Trade Agreement (NAFTA) country" means Canada or Mexico.

"NAFTA country construction material" means a construction material that (a) is wholly the growth, product, or manufacture of a NAFTA country, or (b) in the case of a construction material which consists in whole or in part of materials from another country or instrumentality, has been substantially transformed in a NAFTA country into a new and different construction material distinct from the materials from which it was transformed.

(b)(1) The Buy American Act (41 U.S.C. 10a--10d) requires that only domestic construction material be used in performing this contract, except as provided in paragraphs (b)(2), (b)(3), and (b)(4) of this clause.

(2) The Trade Agreements Act and the North American Free Trade Agreement (NAFTA) provide that designated country and NAFTA country construction materials are exempted from application of the Buy American Act.

(3) The requirement in paragraph (b)(1) of this clause does not apply to the excepted construction material or components listed by the Government as follows:

%%Insert list of applicable accepted materials or indicate "none"

none

(4) Other foreign construction material may be added to the list in paragraph (b)(3) of this clause if the Government determines that--

(i) The cost would be unreasonable (the cost of a particular domestic construction material shall be determined to be unreasonable when the cost of such material exceeds the cost of foreign material by more than 6 percent, unless the agency head determines a higher percentage to be appropriate);

(ii) The application of the restriction of the Buy American Act to a particular construction material would be impracticable or inconsistent with the public interest; or (iii) The construction material is not mined, produced, or manufactured in the United States in sufficient and reasonably available commercial quantities of a satisfactory quality.

(5) The Contractor agrees that only domestic construction materials, NAFTA country construction materials, or designated country construction materials will be used by the Contractor, subcontractors, material men, and suppliers in the performance of this contract, except for foreign construction materials, if any, listed in paragraph (b)(3) of this clause.

(c) Request for determination.

(1) Contractors requesting to use foreign construction material under paragraph (b)(4) of this clause shall provide adequate information for Government evaluation of the request for a determination regarding the inapplicability of the Buy American Act. Each submission shall include a

description of the foreign and domestic construction materials, including unit of measure, quantity, price, time of delivery or availability, location of the construction project, name and address of the proposed contractor, and a detailed justification of the reason for use of foreign materials cited in accordance with paragraph (b)(4) of this clause. A submission based on unreasonable cost shall include a reasonable survey of the market and a completed price comparison table in the format in paragraph (d) of this clause. The price of construction material shall include all delivery costs to the construction site and any applicable duty (whether or not a duty-free certificate may be issued).

(2) If the Government determines after contract award that an exception to the Buy American Act applies, the contract shall be modified to allow use of the foreign construction material, and adequate consideration shall be negotiated. However, when the basis for the exception is the unreasonable price of a domestic construction material, adequate consideration shall not be less than the differential established in paragraph (b)(4)(i) of this clause.

(3) If the Government does not determine that an exception to the Buy American Act applies, the use of that particular foreign construction material will be a failure to comply with the Act.

(d) For evaluation of requests under paragraph (c) of this clause based on unreasonable cost, the following information and any applicable supporting data based on the survey of suppliers shall be included in the request:

Foreign and Domestic Construction Materials Price Comparison

Construction material description	Unit of measure	Quantity	Price (dollars) +
Item 1:			
Foreign construction material.....	.....	.....	.....
Domestic construction material.....	.....	.....	.....
Item 2:			
Foreign construction material.....	.....	.....	.....
Domestic construction material.....	.....	.....	.....

List name, address, telephone number, and contact for suppliers surveyed. Attach copy of response; if oral, attach summary. Include other applicable supporting information.

+ Include all delivery costs to the construction site and any applicable duty (whether or not a duty-free entry certificate is issued).

(End of clause)

50 52.225-15 I BUY AMERICAN ACT--CONSTRUCTION MATERIALS UNDER TRADE AGREEMENTS ACT AND NORTH AMERICAN FREE TRADE AGREEMENT (JUN 1997)--ALTERNATE I (MAY 1997)

(a) Definitions. As used in this clause--

"Components" means those articles, materials, and supplies incorporated directly into construction materials.

"Construction material" means an article, material, or supply brought to the construction site for incorporation into the building or work. Construction material also includes an item brought to the site pre-assembled from articles, materials, or supplies. However, emergency life safety systems, such as emergency lighting, fire alarm, and audio evacuation systems, which are discrete systems incorporated into a public

building or work and which are produced as a complete system, shall be evaluated as a single and distinct construction material regardless of when or how the individual parts or components of such systems are delivered to the construction site.

"Designated country construction material" means a construction material that (a) is wholly the growth, product, or manufacture of a designated country (as defined at FAR 25.401), or (b) in the case of a construction material which consists in whole or in part of materials from another country or instrumentality, has been substantially transformed in a designated country into a new and different construction material distinct from the materials from which it was transformed.

"Domestic construction material" means (l) an unmanufactured construction material mined or produced in the United States, or (2) a construction material manufactured in the United States, if the cost of its components mined, produced, or manufactured in the United States exceeds 50 percent of the cost of all its components. Components of foreign origin of the same class or kind as the construction materials determined to be unavailable pursuant to subparagraph 25.202(a)(2) of the Federal Acquisition Regulation (FAR) shall be treated as domestic.

"North American Free Trade Agreement (NAFTA) country" means Canada or Mexico.

"NAFTA country construction material" means a construction material that (a) is wholly the growth, product, or manufacture of a NAFTA country, or (b) in the case of a construction material which consists in whole or in part of materials from another country or instrumentality, has been substantially transformed in a NAFTA country into a new and different construction material distinct from the materials from which it was transformed.

(b)(1) The Buy American Act (41 U.S.C. 10a--10d) requires that only domestic construction material be used in performing this contract, except as provided in paragraphs (b)(2), (b)(3), and (b)(4) of this clause.

(2) The North American Free Trade Agreement (NAFTA) provides that NAFTA construction materials are exempted from application of the Buy American Act.

(3) The requirement in paragraph (b)(1) of this clause does not apply to the excepted construction material or components listed by the Government as follows:

%%Insert list of applicable accepted materials or indicate "none"

_____

(4) Other foreign construction material may be added to the list in paragraph (b)(3) of this clause if the Government determines that--

(i) The cost would be unreasonable (the cost of a particular domestic construction material shall be determined to be unreasonable when the cost of such material exceeds the cost of foreign material by more than 6 percent, unless the agency head determines a higher percentage to be appropriate);

(ii) The application of the restriction of the Buy American Act to a particular construction material would be impracticable or inconsistent with the public interest; or (iii) The construction material is not mined, produced, or manufactured in the United States in sufficient and reasonably available commercial quantities of a satisfactory quality.

(5) The Contractor agrees that only domestic construction materials or NAFTA country construction materials will be used by the Contractor, subcontractors, material men, and suppliers in the performance of this contract, except for other foreign construction materials, if any, listed in paragraph (b)(3) of this clause.

(c) Request for determination.

(1) Contractors requesting to use foreign construction material under paragraph (b)(4) of this clause shall provide adequate information for Government evaluation of the request for a determination regarding the inapplicability of the Buy American Act. Each submission shall include a description of the foreign and domestic construction materials, including unit of measure, quantity, price, time of delivery or availability, location of the construction project, name and address of the proposed contractor, and a detailed justification of the reason for use of foreign materials cited in accordance with paragraph (b)(4) of this clause. A submission based on unreasonable cost shall include a reasonable survey of the market and a completed price comparison table in the format in paragraph (d) of this clause. The price of construction material shall include all delivery costs to the construction site and any applicable duty (whether or not a duty-free certificate may be issued).

(2) If the Government determines after contract award that an exception to the Buy American Act applies, the contract shall be modified to allow use of the foreign construction material, and adequate consideration shall be negotiated. However, when the basis for the exception is the unreasonable price of a domestic construction material, adequate consideration shall not be less than the differential established in paragraph (b)(4)(i) of this clause.

(3) If the Government does not determine that an exception to the Buy American Act applies, the use of that particular foreign construction material will be a failure to comply with the Act.

(d) For evaluation of requests under paragraph (c) of this clause based on unreasonable cost, the following information and any applicable supporting data based on the survey of suppliers shall be included in the request:

Foreign and Domestic Construction Materials Price Comparison

Construction material description	Unit of measure	Quantity	Price (dollars) +
Item 1:			
Foreign construction material.....	.....	.....	.....
Domestic construction material.....	.....	.....	.....
Item 2:			
Foreign construction material.....	.....	.....	.....
Domestic construction material.....	.....	.....	.....

List name, address, telephone number, and contact for suppliers surveyed. Attach copy of response; if oral, attach summary. Include other applicable supporting information.

+ Include all delivery costs to the construction site and any applicable duty (whether or not a duty-free entry certificate is issued).

(End of clause)

51 52.226-1 UTILIZATION OF INDIAN ORGANIZATIONS AND INDIAN-OWNED ECONOMIC ENTERPRISES (MAY 1999)

(a) For Department of Defense contracts, this clause applies only if the contract includes a subcontracting plan incorporated under the terms of the clause at 52.219-9, Small Business Subcontracting Plan. It does not apply to contracts awarded based on a subcontracting plan submitted and approved under paragraph (g) of the clause at 52.219.

(b) Definitions. As used in this clause:

"Indian" means any person who is a member of any Indian tribe, band, group, pueblo or community which is recognized by the Federal Government as eligible for services from the Bureau of Indian Affairs (BIA) in accordance with 25 U.S.C. 1452(c) and any "Native" as defined in the Alaska Native Claims Settlement Act (43 U.S.C. 1601).

"Indian organization" means the governing body of any Indian tribe or entity established or recognized by the governing body of an Indian tribe for the purposes of 25 U.S.C., Chapter 17.

"Indian-owned economic enterprise" means any Indian-owned (as determined by the Secretary of the Interior) commercial, industrial, or business activity established or organized for the purpose of profit, provided that Indian ownership shall constitute not less than 51 percent of the enterprise.

"Indian tribe" means any Indian tribe, band, group, pueblo or community, including native villages and native groups (including corporations organized by Kenai, Juneau, Sitka, and Kodiak) as defined in the Alaska Native Claims Settlement Act, which is recognized by the Federal Government as eligible for services from BIA in accordance with 25 U.S.C. 1542(c).

"Interested party" means a prime contractor or an actual or prospective offeror whose direct economic interest would be affected by the award of a subcontract or by the failure to award a subcontract.

(c) The Contractor agrees to use its best efforts to give Indian organizations and Indian-owned economic enterprises (25 U.S.C. 1544) the maximum practicable opportunity to participate in the subcontracts it awards to the fullest extent consistent with efficient performance of its contract.

(1) The Contracting Officer and the Contractor, acting in good faith, may rely on the representation of an Indian organization or Indian-owned economic enterprise as to its eligibility, unless an interested party challenges its status or the Contracting Officer has independent reason to question that status. In the event of a challenge to the representation of a subcontractor, the Contracting Officer shall refer the matter to the U.S. Department of the Interior, Bureau of Indian Affairs (BIA), Attn: Chief, Division of Contracting and Grants Administration, 1849 C Street, NW, MS-334A-SIB, Washington, DC 20245. The BIA will determine the eligibility and notify the Contracting Officer. The 5 percent incentive payment will not be made within 50 working days of subcontract award or while a challenge is pending. If a subcontractor is determined to be an ineligible participant, no incentive payment will be made under the Indian Incentive Program.

(2) The Contractor may request an adjustment under the Indian Incentive Program to the following:

(i) The estimated cost of a cost-type contract.

(ii) The target cost of a cost-plus-incentive-fee prime contract.

(iii) The target cost and ceiling price of a fixed-price incentive prime contract.

(iv) The price of a firm-fixed-price prime contract.

(3) The amount of the equitable adjustment to the prime contract shall be 5 percent of the estimated cost, target cost or firm-fixed-price included in the subcontract initially awarded to the Indian organization or Indian-owned economic enterprise.

(4) The Contractor has the burden of proving the amount claimed and must assert its request for an adjustment prior to completion of contract performance.

(d) The Contracting Officer, subject to the terms and conditions of the contract and the availability of funds, shall authorize an incentive

payment of 5 percent of the amount paid to the subcontractor. Contracting Officers shall seek funding in accordance with agency procedures. The Contracting Officer's decision is final and not subject to the Disputes clause of this contract.

(End of clause)

52 52.227-1 AUTHORIZATION AND CONSENT (JUL 1995)

(a) The Government authorizes and consents to all use and manufacture, in performing this contract or any subcontract at any tier, of any invention described in and covered by a United States patent (1) embodied in the structure or composition of any article the delivery of which is accepted by the Government under this contract or (2) used in machinery, tools, or methods whose use necessarily results from compliance by the Contractor or a subcontractor with (i) specifications or written provisions forming a part of this contract or (ii) specific written instructions given by the Contracting Officer directing the manner of performance. The entire liability to the Government for infringement of a patent of the United States shall be determined solely by the provisions of the indemnity clause, if any, included in this contract or any subcontract hereunder (including any lower-tier subcontract), and the Government assumes liability for all other infringement to the extent of the authorization and consent hereinabove granted.

(b) The Contractor agrees to include, and require inclusion of, this clause, suitably modified to identify the parties, in all subcontracts at any tier for supplies or services (including construction, architect-engineer services, and materials, supplies, models, samples, and design or testing services expected to exceed the simplified acquisition threshold); however, omission of this clause from any subcontract, including those at or below the simplified acquisition threshold, does not affect this authorization and consent.

(End of clause)

53 52.227-4 PATENT INDEMNITY--CONSTRUCTION CONTRACTS (APR 1984)

Except as otherwise provided, the Contractor agrees to indemnify the Government and its officers, agents, and employees against liability, including costs and expenses, for infringement upon any United States patent (except a patent issued upon an application that is now or may hereafter be withheld from issue pursuant to a Secrecy Order under 35 U.S.C. 181) arising out of performing this contract or out of the use or disposal by or for the account of the Government of supplies furnished or work performed under this contract.

(End of clause)

(R 7-602.16 1964 JUN)

54 52.227-7022 GOVERNMENT RIGHTS (UNLIMITED) (MAR 1979)

The Government shall have unlimited rights, in all drawings, designs, specifications, notes and other works developed in the performance of this contract, including the right to use same on any other Government design or construction without additional compensation to the Contractor. The Contractor hereby grants to the Government a paid-up license throughout the world to all such works to which he may assert or establish any claim under

design patent or copyright laws. The Contractor for a period of three (3) years after completion of the project agrees to furnish the original or copies of all such works on the request of the Contracting Officer.

(End of clause)

55 52.227-7023 DRAWINGS AND OTHER DATA TO BECOME PROPERTY OF GOVERNMENT (MAR 1979)

All designs, drawings, specifications, notes and other works developed in the performance of this contract shall become the sole property of the Government and may be used on any other design or construction without additional compensation to the Contractor. The Government shall be considered the "person for whom the work was prepared" for the purpose of authorship in any copyrightable work under 17 U.S.C. 201(b). With respect thereto, the Contractor agrees not to assert or authorize others to assert any rights nor establish any claim under the design patent or copyright laws. The Contractor for a period of three (3) years after completion of the project agrees to furnish all retained works on the request of the Contracting Officer. Unless otherwise provided in this contract, the Contractor shall have the right to retain copies of all works beyond such period.

(End of clause)

56 52.227-7033 RIGHTS IN SHOP DRAWINGS (APR 1966)

(a) Shop drawings for construction means drawings, submitted to the Government by the Construction Contractor, subcontractor or any lower-tier subcontractor pursuant to a construction contract, showing in detail (i) the proposed fabrication and assembly of structural elements and (ii) the installation (i.e., form, fit, and attachment details) of materials or equipment. The Government may duplicate, use, and disclose in any manner and for any purpose shop drawings delivered under this contract.

(b) This clause, including this paragraph (b), shall be included in all subcontracts hereunder at any tier.

(End of clause)

57 52.228-2 ADDITIONAL BOND SECURITY (OCT 1997)

The Contractor shall promptly furnish additional security required to protect the Government and persons supplying labor or materials under this contract if--

(a) Any surety upon any bond, or issuing financial institution for other security, furnished with this contract becomes unacceptable to the Government;

(b) Any surety fails to furnish reports on its financial condition as required by the Government;

(c) The contract price is increased so that the penal sum of any bond becomes inadequate in the opinion of the Contracting Officer; or

(d) An irrevocable letter of credit (ILC) used as security will expire before the end of the period of required security. If the Contractor does not furnish an acceptable extension or replacement ILC, or other acceptable substitute, at least 30 days before an ILC's scheduled expiration, the Contracting officer has the right to immediately draw on the ILC.

(End of clause)

58 52.228-12 PROSPECTIVE SUBCONTRACTOR REQUESTS FOR BONDS (OCT 1995)

In accordance with Section 806(a)(3) of Pub. L. 102-190, as amended by Sections 2091 and 8105 of Pub. L. 103-355, upon the request of a prospective subcontractor or supplier offering to furnish labor or material for the performance of this contract for which a payment bond has been furnished to the Government pursuant to the Miller Act, the Contractor shall promptly provide a copy of such payment bond to the requester.

(End of clause)

59 52.229-3 FEDERAL, STATE, AND LOCAL TAXES (JAN 1991)

(a) "Contract date," as used in this clause, means the date set for bid opening or, if this is a negotiated contract or a modification, the effective date of this contract or modification.

"All applicable Federal, State, and local taxes and duties," as used in this clause, means all taxes and duties, in effect on the contract date, that the taxing authority is imposing and collecting on the transactions or property covered by this contract.

"After-imposed Federal tax," as used in this clause, means any new or increased Federal excise tax or duty, or tax that was exempted or excluded on the contract date but whose exemption was later revoked or reduced during the contract period, on the transactions or property covered by this contract that the Contractor is required to pay or bear as the result of legislative, judicial, or administrative action taking effect after the contract date. It does not include social security tax or other employment taxes.

"After-relieved Federal tax," as used in this clause, means any amount of Federal excise tax or duty, except social security or other employment taxes, that would otherwise have been payable on the transactions or property covered by this contract, but which the Contractor is not required to pay or bear, or for which the Contractor obtains a refund or drawback, as the result of legislative, judicial, or administrative action taking effect after the contract date.

(b) The contract price includes all applicable Federal, State, and local taxes and duties.

(c) The contract price shall be increased by the amount of any after-imposed Federal tax, provided the Contractor warrants in writing that no amount for such newly imposed Federal excise tax or duty or rate increase was included in the contract price, as a contingency reserve or otherwise.

(d) The contract price shall be decreased by the amount of any after-relieved Federal tax.

(e) The contract price shall be decreased by the amount of any Federal excise tax or duty, except social security or other employment taxes, that the Contractor is required to pay or bear, or does not obtain a refund of, through the Contractor's fault, negligence, or failure to follow instructions of the Contracting Officer.

(f) No adjustment shall be made in the contract price under this clause unless the amount of the adjustment exceeds $250.

(g) The Contractor shall promptly notify the Contracting Officer of all matters relating to any Federal excise tax or duty that reasonably may be expected to result in either an increase or decrease in the contract price and shall take appropriate action as the Contracting Officer directs.

(h) The Government shall, without liability, furnish evidence appropriate to establish exemption from any Federal, State, or local tax when the Contractor requests such evidence and a reasonable basis exists to sustain the exemption.

(End of clause)

60 52.231-7000 SUPPLEMENTAL COST PRINCIPLES (DEC 1991)

When the allowability of costs under this contract is determined in accordance with Part 31 of the Federal Acquisition Regulation (FAR), allowability shall also be determined in accordance with Part 231 of the Defense FAR Supplement, in effect on the date of this contract.

(End of clause)

61 52.232-5 PAYMENTS UNDER FIXED-PRICE CONSTRUCTION CONTRACTS (MAY 1997)

(a) Payment of price. The Government shall pay the Contractor the contract price as provided in this contract.

(b) Progress payments. The Government shall make progress payments monthly as the work proceeds, or at more frequent intervals as determined by the Contracting Officer, on estimates of work accomplished which meets the standards of quality established under the contract, as approved by the Contracting Officer.

(1) The Contractor's request for progress payments shall include the following substantiation:

(i) An itemization of the amounts requested, related to the various elements of work required by the contract covered by the payment requested.

(ii) A listing of the amount included for work performed by each subcontractor under the contract.

(iii) A listing of the total amount of each subcontract under the contract.

(iv) A listing of the amounts previously paid to each such subcontractor under the contract.

(v) Additional supporting data in a form and detail required by the Contracting Officer.

(2) In the preparation of estimates, the Contracting Officer may authorize material delivered on the site and preparatory work done to be taken into consideration. Material delivered to the Contractor at locations other than the site also may be taken into consideration if--

(i) Consideration is specifically authorized by this contract; and

(ii) The Contractor furnishes satisfactory evidence that it has acquired title to such material and that the material will be used to perform this contract.

(c) Contractor certification. Along with each request for progress payments, the Contractor shall furnish the following certification, or payment shall not be made: (However, if the Contractor elects to delete paragraph (c)(4) from the certification, the certification is still acceptable.)

I hereby certify, to the best of my knowledge and belief, that--

(1) The amounts requested are only for performance in accordance with the specifications, terms, and conditions of the contract;

(2) Payments to subcontractors and suppliers have been made from previous payments received under the contract, and timely payments will

be made from the proceeds of the payment covered by this certification, in accordance with subcontract agreements and the requirements of chapter 39 of Title 31, United States Code;

(3) This request for progress payments does not include any amounts which the prime contractor intends to withhold or retain from a subcontractor or supplier in accordance with the terms and conditions of the subcontract; and

(4) This certification is not to be construed as final acceptance of a subcontractor's performance.

_____
(Name)

_____
(Title)

_____
(Date)

(d) Refund of unearned amounts. If the Contractor, after making a certified request for progress payments, discovers that a portion or all of such request constitutes a payment for performance by the Contractor that fails to conform to the specifications, terms, and conditions of this contract (hereinafter referred to as the "unearned amount"), the Contractor shall--

(1) Notify the Contracting Officer of such performance deficiency; and

(2) Be obligated to pay the Government an amount (computed by the Contracting Officer in the manner provided in paragraph (j) of this clause) equal to interest on the unearned amount from the 8th day after the date of receipt of the unearned amount until--

(i) The date the Contractor notifies the Contracting Officer that the performance deficiency has been corrected; or

(ii) The date the Contractor reduces the amount of any subsequent certified request for progress payments by an amount equal to the unearned amount.

(e) Retainage. If the Contracting Officer finds that satisfactory progress was achieved during any period for which a progress payment is to be made, the Contracting Officer shall authorize payment to be made in full. However, if satisfactory progress has not been made, the Contracting Officer may retain a maximum of 10 percent of the amount of the payment until satisfactory progress is achieved. When the work is substantially complete, the Contracting Officer may retain from previously withheld funds and future progress payments that amount the Contracting Officer considers adequate for protection of the Government and shall release to the Contractor all the remaining withheld funds. Also, on completion and acceptance of each separate building, public work, or other division of the contract, for which the price is stated separately in the contract, payment shall be made for the completed work without retention of a percentage.

(f) Title, liability, and reservation of rights. All material and work covered by progress payments made shall, at the time of payment, become the sole property of the Government, but this shall not be construed as--

(1) Relieving the Contractor from the sole responsibility for all material and work upon which payments have been made or the restoration of any damaged work; or

(2) Waiving the right of the Government to require the fulfillment of all of the terms of the contract.

(g) Reimbursement for bond premiums. In making these progress payments, the Government shall, upon request, reimburse the Contractor for the amount of premiums paid for performance and payment bonds (including coinsurance and reinsurance agreements, when applicable) after the Contractor has furnished evidence of full payment to the surety. The retainage provisions

in paragraph (e) of this clause shall not apply to that portion of progress payments attributable to bond premiums.

(h) Final payment. The Government shall pay the amount due the Contractor under this contract after--

(1) Completion and acceptance of all work;

(2) Presentation of a properly executed voucher; and

(3) Presentation of release of all claims against the Government arising by virtue of this contract, other than claims, in stated amounts, that the Contractor has specifically excepted from the operation of the release. A release may also be required of the assignee if the Contractor's claim to amounts payable under this contract has been assigned under the Assignment of Claims Act of 1940 (31 U.S.C. 3727 and 41 U.S.C. 15).

(i) Limitation because of undefinitized work. Notwithstanding any provision of this contract, progress payments shall not exceed 80 percent on work accomplished on undefinitized contract actions. A "contract action" is any action resulting in a contract, as defined in FAR Subpart 2.1, including contract modifications for additional supplies or services, but not including contract modifications that are within the scope and under the terms of the contract, such as contract modifications issued pursuant to the Changes clause, or funding and other administrative changes.

(j) Interest computation on unearned amounts. In accordance with 31 U.S.C. 3903(c)(1), the amount payable under subparagraph (d)(2) of this clause shall be--

(1) Computed at the rate of average bond equivalent rates of 91-day Treasury bills auctioned at the most recent auction of such bills prior to the date the Contractor receives the unearned amount; and

(2) Deducted from the next available payment to the Contractor.

(End of clause)

62 52.232-17 INTEREST (JUN 1996)

(a) Except as otherwise provided in this contract under a Price Reduction for Defective Cost or Pricing Data clause or a Cost Accounting Standards clause, all amounts that become payable by the Contractor to the Government under this contract (net of any applicable tax credit under the Internal Revenue Code (26 U.S.C. 1481)) shall bear simple interest from the date due until paid unless paid within 30 days of becoming due. The interest rate shall be the interest rate established by the Secretary of the Treasury as provided in Section 12 of the Contract Disputes Act of 1978 (Public Law 95-563), which is applicable to the period in which the amount becomes due, as provided in paragraph (b) of this clause, and then at the rate applicable for each six-month period as fixed by the Secretary until the amount is paid.

(b) Amounts shall be due at the earliest of the following dates:

(1) The date fixed under this contract.

(2) The date of the first written demand for payment consistent with this contract, including any demand resulting from a default termination.

(3) The date the Government transmits to the Contractor a proposed supplemental agreement to confirm completed negotiations establishing the amount of debt.

(4) If this contract provides for revision of prices, the date of written notice to the Contractor stating the amount of refund payable in connection with a pricing proposal or a negotiated pricing agreement not confirmed by contract modification.

(c) The interest charge made under this clause may be reduced under the procedures prescribed in 32.614-2 of the Federal Acquisition Regulation in effect on the date of this contract.

(End of clause)

63 52.232-18 AVAILABILITY OF FUNDS (APR 1984)

Funds are not presently available for this contract. The Government's obligation under this contract is contingent upon the availability of appropriated funds from which payment for contract purposes can be made. No legal liability on the part of the Government for any payment may arise until funds are made available to the Contracting Officer for this contract and until the Contractor receives notice of such availability, to be confirmed in writing by the Contracting Officer.

(End of clause)

(SS 7-104.91(a) 1962 SEP)

64 52.232-23 ASSIGNMENT OF CLAIMS (JAN 1986)

(a) The Contractor, under the Assignment of Claims Act, as amended, 31 U.S.C. 3727, 41 U.S.C. 15 (hereafter referred to as "the Act"), may assign its rights to be paid amounts due or to become due as a result of the performance of this contract to a bank, trust company, or other financing institution, including any Federal lending agency. The assignee under such an assignment may thereafter further assign or reassign its right under the original assignment to any type of financing institution described in the preceding sentence.

(b) Any assignment or reassignment authorized under the Act and this clause shall cover all unpaid amounts payable under this contract, and shall not be made to more than one party, except that an assignment or reassignment may be made to one party as agent or trustee for two or more parties participating in the financing of this contract.

(c) The Contractor shall not furnish or disclose to any assignee under this contract any classified document (including this contract) or information related to work under this contract until the Contracting Officer authorizes such action in writing.

(End of clause)

65 52.232-27 PROMPT PAYMENT FOR CONSTRUCTION CONTRACTS (JUN 1997)

Notwithstanding any other payment terms in this contract, the Government will make invoice payments and contract financing payments under the terms and conditions specified in this clause. Payment shall be considered as being made on the day a check is dated or the date of an electronic funds transfer. Definitions of pertinent terms are set forth in section 32.902 of the Federal Acquisition Regulation. All days referred to in this clause are calendar days, unless otherwise specified. (However, see subparagraph (a)(3) concerning payments due on Saturdays, Sundays, and legal holidays.)

(a) Invoice payments--

(1) Types of invoice payments. For purposes of this clause, there are several types of invoice payments that may occur under this contract, as follows:

(i) Progress payments, if provided for elsewhere in this contract, based on Contracting Officer approval of the estimated amount and value

of work or services performed, including payments for reaching milestones in any project:

(A) The due date for making such payments shall be 14 days after receipt of the payment request by the designated billing office. If the designated billing office fails to annotate the payment request with the actual date of receipt at the time of receipt, the payment due date shall be the 14th day after the date of the Contractor's payment request, provided a proper payment request is received and there is no disagreement over quantity, quality, or Contractor compliance with contract requirements.

(B) The due date for payment of any amounts retained by the Contracting Officer in accordance with the clause at 52.232-5, Payments Under Fixed-Price Construction Contracts, shall be as specified in the contract or, if not specified, 30 days after approval for release to the Contractor by the Contracting Officer.

(ii) Final payments based on completion and acceptance of all work and presentation of release of all claims against the Government arising by virtue of the contract, and payments for partial deliveries that have been accepted by the Government (e.g., each separate building, public work, or other division of the contract for which the price is stated separately in the contract):

(A) The due date for making such payments shall be either the 30th day after receipt by the designated billing office of a proper invoice from the Contractor, or the 30th day after Government acceptance of the work or services completed by the Contractor, whichever is later. If the designated billing office fails to annotate the invoice with the date of actual receipt at the time of receipt, the invoice payment due date shall be the 30th day after the date of the Contractor's invoice, provided a proper invoice is received and there is no disagreement over quantity, quality, or Contractor compliance with contract requirements.

(B) On a final invoice where the payment amount is subject to contract settlement actions (e.g., release of claims), acceptance shall be deemed to have occurred on the effective date of the contract settlement.

(2) Contractor's invoice. The Contractor shall prepare and submit invoices to the designated billing office specified in the contract. A proper invoice must include the items listed in paragraphs (a)(2)(i) through (a)(2)(ix) of this clause. If the invoice does not comply with these requirements, it shall be returned within 7 days after the date the designated billing office received the invoice, with a statement of the reasons why it is not a proper invoice. Untimely notification will be taken into account in computing any interest penalty owed the Contractor in the manner described in subparagraph (a)(4) of this clause.

(i) Name and address of the Contractor.

(ii) Invoice date. (The Contractor is encouraged to date invoices as close as possible to the date of mailing or transmission.)

(iii) Contract number or other authorization for work or services performed (including order number and contract line item number).

(iv) Description of work or services performed.

(v) Delivery and payment terms (e.g., prompt payment discount terms).

(vi) Name and address of Contractor official to whom payment is to be sent (must be the same as that in the contract or in a proper notice of assignment).

(vii) Name (where practicable), title, phone number, and mailing address of person to be notified in the event of a defective invoice.

(viii) For payments described in paragraph (a)(1)(i) of this clause,

substantiation of the amounts requested and certification in accordance with the requirements of the clause at 52.232-5, Payments Under Fixed-Price Construction Contracts.

(ix) Any other information or documentation required by the contract.

(x) While not required, the Contractor is strongly encouraged to assign an identification number to each invoice.

(3) Interest penalty. An interest penalty shall be paid automatically by the designated payment office, without request from the Contractor, if payment is not made by the due date and the conditions listed in paragraphs (a)(3)(i) through (a)(3)(iii) of this clause are met, if applicable. However, when the due date falls on a Saturday, Sunday, or legal holiday when Federal Government offices are closed and Government business is not expected to be conducted, payment may be made on the following business day without incurring a late payment interest penalty.

(i) A proper invoice was received by the designated billing office.

(ii) A receiving report or other Government documentation authorizing payment was processed and there was no disagreement over quantity, quality, Contractor compliance with any contract term or condition, or requested progress payment amount.

(iii) In the case of a final invoice for any balance of funds due the Contractor for work or services performed, the amount was not subject to further contract settlement actions between the Government and the Contractor.

(4) Computing penalty amount. The interest penalty shall be at the rate established by the Secretary of the Treasury under section 12 of the Contract Disputes Act of 1978 (41 U.S.C. 611) that is in effect on the day after the due date, except where the interest penalty is prescribed by other governmental authority (e.g., tariffs). This rate is referred to as the "Renegotiation Board Interest Rate," and it is published in the Federal Register semiannually on or about January 1 and July 1. The interest penalty shall accrue daily on the invoice principal payment amount approved by the Government until the payment date of such approved principal amount; and will be compounded in 30-day increments inclusive from the first day after the due date through the payment date. That is, interest accrued at the end of any 30-day period will be added to the approved invoice principal payment amount and will be subject to interest penalties if not paid in the succeeding 30-day period. If the designated billing office failed to notify the Contractor of a defective invoice within the periods prescribed in subparagraph (a)(2) of this clause, the due date on the corrected invoice will be adjusted by subtracting from such date the number of days taken beyond the prescribed notification of defects period. Any interest penalty owed the Contractor will be based on this adjusted due date. Adjustments will be made by the designated payment office for errors in calculating interest penalties.

(i) For the sole purpose of computing an interest penalty that might be due the Contractor for payments described in paragraph (a)(1)(ii) of this clause, Government acceptance or approval shall be deemed to have occurred constructively on the 7th day after the Contractor has completed the work or services in accordance with the terms and conditions of the contract. In the event that actual acceptance or approval occurs within the constructive acceptance or approval period, the determination of an interest penalty shall be based on the actual date of acceptance or approval. Constructive acceptance or constructive approval requirements do not apply if there is a disagreement over quantity, quality, or Contractor compliance with a contract provision. These requirements also do not compel Government officials to accept work or services, approve Contractor estimates,

perform contract administration functions, or make payment prior to fulfilling their responsibilities.

(ii) The following periods of time will not be included in the determination of an interest penalty:

(A) The period taken to notify the Contractor of defects in invoices submitted to the Government, but this may not exceed 7 days.

(B) The period between the defects notice and resubmission of the corrected invoice by the Contractor.

(C) For incorrect electronic funds transfer (EFT) information, in accordance with the EFT clause of this contract.

(iii) Interest penalties will not continue to accrue after the filing of a claim for such penalties under the clause at 52.233-1, Disputes, or for more than 1 year. Interest penalties of less than $1 need not be paid.

(iv) Interest penalties are not required on payment delays due to disagreement between the Government and the Contractor over the payment amount or other issues involving contract compliance, or on amounts temporarily withheld or retained in accordance with the terms of the contract. Claims involving disputes, and any interest that may be payable, will be resolved in accordance with the clause at 52.233-1, Disputes.

(5) Prompt payment discounts. An interest penalty also shall be paid automatically by the designated payment office, without request from the Contractor, if a discount for prompt payment is taken improperly. The interest penalty will be calculated on the amount of discount taken for the period beginning with the first day after the end of the discount period through the date when the Contractor is paid.

(6) Additional interest penalty.

(i) A penalty amount, calculated in accordance with subdivision (a)(6)(iii) of this clause, shall be paid in addition to the interest penalty amount if the Contractor--

(A) Is owed an interest penalty of $1 or more;

(B) Is not paid the interest penalty within 10 days after the date the invoice amount is paid; and

(C) Makes a written demand to the designated payment office for additional penalty payment, in accordance with subdivision (a)(6)(ii) of this clause, postmarked not later than 40 days after the date the invoice amount is paid.

(ii)(A) Contractors shall support written demands for additional penalty payments with the following data. No additional data shall be required. Contractors shall--

(1) Specifically assert that late payment interest is due under a specific invoice, and request payment of all overdue late payment interest penalty and such additional penalty as may be required;

(2) Attach a copy of the invoice on which the unpaid late payment interest was due; and

(3) State that payment of the principal has been received, including the date of receipt.

(B) Demands must be postmarked on or before the 40th day after payment was made, except that--

(1) If the postmark is illegible or nonexistent, the demand must have been received and annotated with the date of receipt by the designated payment office on or before the 40th day after payment was made; or

(2) If the postmark is illegible or nonexistent and the designated payment office fails to make the required annotation, the demand's validity will be determined by the date the Contractor

has placed on the demand; provided such date is no later than the 40th day after payment was made.

(iii)(A) The additional penalty shall be equal to 100 percent of any original late payment interest penalty, except--

(1) The additional penalty shall not exceed $5,000;

(2) The additional penalty shall never be less than $25; and

(3) No additional penalty is owed if the amount of the underlying interest penalty is less than $1.

(B) If the interest penalty ceases to accrue in accordance with the limits stated in subdivision (a)(4)(iii) of this clause, the amount of the additional penalty shall be calculated on the amount of interest penalty that would have accrued in the absence of these limits, subject to the overall limits on the additional penalty specified in subdivision (a)(6)(iii)(A) of this clause.

(C) For determining the maximum and minimum additional penalties, the test shall be the interest penalty due on each separate payment made for each separate contract. The maximum and minimum additional penalty shall not be based upon individual invoices unless the invoices are paid separately. Where payments are consolidated for disbursing purposes, the maximum and minimum additional penalty determination shall be made separately for each contract therein.

(D) The additional penalty does not apply to payments regulated by other Government regulations (e.g., payments under utility contracts subject to tariffs and regulation).

(b) Contract financing payments--

(1) Due dates for recurring financing payments. If this contract provides for contract financing, requests for payment shall be submitted to the designated billing office as specified in this contract or as directed by the Contracting Officer. Contract financing payments shall be made on the 30th day after receipt of a proper contract financing request by the designated billing office. In the event that an audit or other review of a specific financing request is required to ensure compliance with the terms and conditions of the contract, the designated payment office is not compelled to make payment by the due date specified.

(2) Due dates for other contract financing. For advance payments, loans, or other arrangements that do not involve recurring submissions of contract financing requests, payment shall be made in accordance with the corresponding contract terms or as directed by the Contracting Officer.

(3) Interest penalty not applicable. Contract financing payments shall not be assessed an interest penalty for payment delays.

(c) Subcontract clause requirements. The Contractor shall include in each subcontract for property or services (including a material supplier) for the purpose of performing this contract the following:

(1) Prompt payment for subcontractors. A payment clause that obligates the Contractor to pay the subcontractor for satisfactory performance under its subcontract not later than 7 days from receipt of payment out of such amounts as are paid to the Contractor under this contract.

(2) Interest for subcontractors. An interest penalty clause that obligates the Contractor to pay to the subcontractor an interest penalty for each payment not made in accordance with the payment clause--

(i) For the period beginning on the day after the required payment date and ending on the date on which payment of the amount due is made; and

(ii) Computed at the rate of interest established by the Secretary of the Treasury, and published in the Federal Register, for interest payments under section 12 of the Contract Disputes Act of 1978 (41

U.S.C. 611) in effect at the time the Contractor accrues the obligation to pay an interest penalty.

(3) Subcontractor clause flowdown. A clause requiring each subcontractor to include a payment clause and an interest penalty clause conforming to the standards set forth in subparagraphs (c)(1) and (c)(2) of this clause in each of its subcontracts, and to require each of its subcontractors to include such clauses in their subcontracts with each lower-tier subcontractor or supplier.

(d) Subcontract clause interpretation. The clauses required by paragraph (c) of this clause shall not be construed to impair the right of the Contractor or a subcontractor at any tier to negotiate, and to include in their subcontract, provisions that--

(1) Retainage permitted. Permit the Contractor or a subcontractor to retain (without cause) a specified percentage of each progress payment otherwise due to a subcontractor for satisfactory performance under the subcontract without incurring any obligation to pay a late payment interest penalty, in accordance with terms and conditions agreed to by the parties to the subcontract, giving such recognition as the parties deem appropriate to the ability of a subcontractor to furnish a performance bond and a payment bond;

(2) Withholding permitted. Permit the Contractor or subcontractor to make a determination that part or all of the subcontractor's request for payment may be withheld in accordance with the subcontract agreement; and

(3) Withholding requirements. Permit such withholding without incurring any obligation to pay a late payment penalty if--

(i) A notice conforming to the standards of paragraph (g) of this clause previously has been furnished to the subcontractor; and

(ii) A copy of any notice issued by a Contractor pursuant to subdivision (d)(3)(i) of this clause has been furnished to the Contracting Officer.

(e) Subcontractor withholding procedures. If a Contractor, after making a request for payment to the Government but before making a payment to a subcontractor for the subcontractor's performance covered by the payment request, discovers that all or a portion of the payment otherwise due such subcontractor is subject to withholding from the subcontractor in accordance with the subcontract agreement, then the Contractor shall--

(1) Subcontractor notice. Furnish to the subcontractor a notice conforming to the standards of paragraph (g) of this clause as soon as practicable upon ascertaining the cause giving rise to a withholding, but prior to the due date for subcontractor payment;

(2) Contracting Officer notice. Furnish to the Contracting Officer, as soon as practicable, a copy of the notice furnished to the subcontractor pursuant to subparagraph (e)(1) of this clause;

(3) Subcontractor progress payment reduction. Reduce the subcontractor's progress payment by an amount not to exceed the amount specified in the notice of withholding furnished under subparagraph (e)(1) of this clause;

(4) Subsequent subcontractor payment. Pay the subcontractor as soon as practicable after the correction of the identified subcontract performance deficiency, and--

(i) Make such payment within--

(A) Seven days after correction of the identified subcontract performance deficiency (unless the funds therefor must be recovered from the Government because of a reduction under paragraph (e)(5)(i)) of this clause; or

(B) Seven days after the Contractor recovers such funds from the Government; or

(ii) Incur an obligation to pay a late payment interest penalty computed at the rate of interest established by the Secretary of the Treasury, and published in the Federal Register, for interest payments under section 12 of the Contracts Disputes Act of 1978 (41 U.S.C. 611) in effect at the time the Contractor accrues the obligation to pay an interest penalty;

(5) Notice to Contracting Officer. Notify the Contracting Officer upon--

(i) Reduction of the amount of any subsequent certified application for payment; or

(ii) Payment to the subcontractor of any withheld amounts of a progress payment, specifying--

(A) The amounts withheld under subparagraph (e)(1) of this clause; and

(B) The dates that such withholding began and ended; and

(6) Interest to Government. Be obligated to pay to the Government an amount equal to interest on the withheld payments (computed in the manner provided in 31 U.S.C. 3903(c)(1)), from the 8th day after receipt of the withheld amounts from the Government until--

(i) The day the identified subcontractor performance deficiency is corrected; or

(ii) The date that any subsequent payment is reduced under subdivision (e)(5)(i) of this clause.

(f) Third-party deficiency reports--

(1) Withholding from subcontractor. If a Contractor, after making payment to a first-tier subcontractor, receives from a supplier or subcontractor of the first-tier subcontractor (hereafter referred to as a "second-tier subcontractor") a written notice in accordance with section 2 of the Act of August 24, 1935 (40 U.S.C. 270b, Miller Act), asserting a deficiency in such first-tier subcontractor's performance under the contract for which the Contractor may be ultimately liable, and the Contractor determines that all or a portion of future payments otherwise due such first-tier subcontractor is subject to withholding in accordance with the subcontract agreement, the Contractor may, without incurring an obligation to pay an interest penalty under subparagraph (e)(6) of this clause--

(i) Furnish to the first-tier subcontractor a notice conforming to the standards of paragraph (g) of this clause as soon as practicable upon making such determination; and

(ii) Withhold from the first-tier subcontractor's next available progress payment or payments an amount not to exceed the amount specified in the notice of withholding furnished under paragraph (f)(1)(i) of this clause.

(2) Subsequent payment or interest charge. As soon as practicable, but not later than 7 days after receipt of satisfactory written notification that the identified subcontract performance deficiency has been corrected, the Contractor shall--

(i) Pay the amount withheld under paragraph (f)(1)(ii) of this clause to such first-tier subcontractor; or

(ii) Incur an obligation to pay a late payment interest penalty to such first-tier subcontractor computed at the rate of interest established by the Secretary of the Treasury, and published in the Federal Register, for interest payments under section 12 of the Contracts Disputes Act of 1978 (41 U.S.C. 611) in effect at the time the Contractor accrues the obligation to pay an interest penalty.

(g) Written notice of subcontractor withholding. A written notice of any withholding shall be issued to a subcontractor (with a copy to the

Contracting Officer of any such notice issued by the Contractor), specifying--

(1) The amount to be withheld;

(2) The specific causes for the withholding under the terms of the subcontract; and

(3) The remedial actions to be taken by the subcontractor in order to receive payment of the amounts withheld.

(h) Subcontractor payment entitlement. The Contractor may not request payment from the Government of any amount withheld or retained in accordance with paragraph (d) of this clause until such time as the Contractor has determined and certified to the Contracting Officer that the subcontractor is entitled to the payment of such amount.

(i) Prime-subcontractor disputes. A dispute between the Contractor and subcontractor relating to the amount or entitlement of a subcontractor to a payment or a late payment interest penalty under a clause included in the subcontract pursuant to paragraph (c) of this clause does not constitute a dispute to which the United States is a party. The United States may not be interpleaded in any judicial or administrative proceeding involving such a dispute.

(j) Preservation of prime-subcontractor rights. Except as provided in paragraph (i) of this clause, this clause shall not limit or impair any contractual, administrative, or judicial remedies otherwise available to the Contractor or a subcontractor in the event of a dispute involving late payment or nonpayment by the Contractor or deficient subcontract performance or nonperformance by a subcontractor.

(k) Non-recourse for prime contractor interest penalty. The Contractor's obligation to pay an interest penalty to a subcontractor pursuant to the clauses included in a subcontract under paragraph (c) of this clause shall not be construed to be an obligation of the United States for such interest penalty. A cost-reimbursement claim may not include any amount for reimbursement of such interest penalty.

(End of clause)

66 52.232-33 PAYMENT BY ELECTRONIC FUNDS TRANSFER--CENTRAL CONTRACTOR REGISTRATION (MAY 1999)

(a) Method of payment. (1) All payments by the Government under this contract shall be made by electronic funds transfer (EFT), except as provided in paragraph (a)(2) of this clause. As used in this clause, the term "EFT" refers to the funds transfer and may also include the payment information transfer.

(2) In the event the Government is unable to release one or more payments by EFT, the Contractor agrees to either--

(i) Accept payment by check or some other mutually agreeable method of payment; or

(ii) Request the Government to extend the payment due date until such time as the Government can make payment by EFT (but see paragraph (d) of this clause).

(b) Contractor's EFT information. The Government shall make payment to the Contractor using the EFT information contained in the Central Contractor Registration (CCR) database. In the event that the EFT information changes, the Contractor shall be responsible for providing the updated information to the CCR database.

(c) Mechanisms for EFT payment. The Government may make payment by EFT through either the Automated Clearing House (ACH) network, subject to the rules of the National Automated Clearing House

Association, or the Fedwire Transfer System. The rules governing Federal payments through the ACH are contained in 31 CFR part 210.

(d) Suspension of payment. If the Contractor's EFT information in the CCR database is incorrect, then the Government need not make payment to the Contractor under this contract until correct EFT information is entered into the CCR database; and any invoice or contract financing request shall be deemed not to be a proper invoice for the purpose of prompt payment under this contract. The prompt payment terms of the contract regarding notice of an improper invoice and delays in accrual of interest penalties apply.

(e) Contractor EFT arrangements. If the Contractor has identified multiple payment receiving points (i.e., more than one remittance address and/or EFT information set) in the CCR database, and the Contractor has not notified the Government of the payment receiving point applicable to this contract, the Government shall make payment to the first payment receiving point (EFT information set or remittance address as applicable) listed in the CCR database.

(f) Liability for uncompleted or erroneous transfers. (1) If an uncompleted or erroneous transfer occurs because the Government used the Contractor's EFT information incorrectly, the Government remains responsible for--

(i) Making a correct payment;

(ii) Paying any prompt payment penalty due; and

(iii) Recovering any erroneously directed funds.

(2) If an uncompleted or erroneous transfer occurs because the Contractor's EFT information was incorrect, or was revised within 30 days of Government release of the EFT payment transaction instruction to the Federal Reserve System, and--

(i) If the funds are no longer under the control of the payment office, the Government is deemed to have made payment and the Contractor is responsible for recovery of any erroneously directed funds; or

(ii) If the funds remain under the control of the payment office, the Government shall not make payment, and the provisions of paragraph (d) of this clause shall apply.

(g) EFT and prompt payment. A payment shall be deemed to have been made in a timely manner in accordance with the prompt payment terms of this contract if, in the EFT payment transaction instruction released to the Federal Reserve System, the date specified for settlement of the payment is on or before the prompt payment due date, provided the specified payment date is a valid date under the rules of the Federal Reserve System.

(h) EFT and assignment of claims. If the Contractor assigns the proceeds of this contract as provided for in the assignment of claims terms of this contract, the Contractor shall require as a condition of any such assignment, that the assignee shall register in the CCR database and shall be paid by EFT in accordance with the terms of this clause. In all respects, the requirements of this clause shall apply to the assignee as if it were the Contractor. EFT information that shows the ultimate recipient of the transfer to be other than the Contractor, in the absence of a proper assignment of claims acceptable to the Government, is incorrect EFT information within the meaning of paragraph (d) of this clause.

(i) Liability for change of EFT information by financial agent. The Government is not liable for errors resulting from changes to EFT information made by the Contractor's financial agent.

(j) Payment information. The payment or disbursing office shall

forward to the Contractor available payment information that is suitable for transmission as of the date of release of the EFT instruction to the Federal Reserve System. The Government may request the Contractor to designate a desired format and method(s) for delivery of payment information from a list of formats and methods the payment office is capable of executing. However, the Government does not guarantee that any particular format or method of delivery is available at any particular payment office and retains the latitude to use the format and delivery method most convenient to the Government. If the Government makes payment by check in accordance with paragraph (a) of this clause, the Government shall mail the payment information to the remittance address contained in the CCR database.

(End of Clause)

67 52.233-1 I DISPUTES (OCT 1995)--ALTERNATE I (DEC 1991)

(a) This contract is subject to the Contract Disputes Act of 1978, as amended (41 U.S.C. 601-613).

(b) Except as provided in the Act, all disputes arising under or relating to this contract shall be resolved under this clause.

(c) "Claim," as used in this clause, means a written demand or written assertion by one of the contracting parties seeking, as a matter of right, the payment of money in a sum certain, the adjustment or interpretation of contract terms, or other relief arising under or relating to this contract. A claim arising under a contract, unlike a claim relating to that contract, is a claim that can be resolved under a contract clause that provides for the relief sought by the claimant. However, a written demand or written assertion by the Contractor seeking the payment of money exceeding $100,000 is not a claim under the Act until certified as required by subparagraph (d)(2) of this clause. A voucher, invoice, or other routine request for payment that is not in dispute when submitted is not a claim under the Act. The submission may be converted to a claim under the Act, by complying with the submission and certification requirements of this clause, if it is disputed either as to liability or amount or is not acted upon in a reasonable time.

(d)(1) A claim by the Contractor shall be made in writing and, unless otherwise stated in this contract, submitted within 6 years after accrual of the claim to the Contracting Officer for a written decision. A claim by the Government against the Contractor shall be subject to a written decision by the Contracting Officer.

(2)(i) Contractors shall provide the certification specified in subparagraph (d)(2)(iii) of this clause when submitting any claim--

(A) Exceeding $100,000; or

(B) Regardless of the amount claimed, when using--

(1) Arbitration conducted pursuant to 5 U.S.C. 575-580; or

(2) Any other alternative means of dispute resolution (ADR) technique that the agency elects to handle in accordance with the Administrative Dispute Resolution Act (ADRA).

(ii) The certification requirement does not apply to issues in controversy that have not been submitted as all or part of a claim.

(iii) The certification shall state as follows:

"I certify that the claim is made in good faith; that the supporting data are accurate and complete to the best of my knowledge and belief; that the amount requested accurately reflects the contract adjustment for which the Contractor believes the Government is liable; and that I

am duty authorized to certify the claim on behalf of the Contractor."

(3) The certification may be executed by any person duly authorized to bind the Contractor with respect to the claim.

(e) For Contractor claims of $100,000 or less, the Contracting Officer must, if requested in writing by the Contractor, render a decision within 60 days of the request. For Contractor-certified claims over $100,000, the Contracting Officer must, within 60 days, decide the claim or notify the Contractor of the date by which the decision will be made.

(f) The Contracting Officer's decision shall be final unless the Contractor appeals or files a suit as provided in the Act.

(g) If the claim by the Contractor is submitted to the Contracting Officer or a claim by the Government is presented to the Contractor, the parties, by mutual consent, may agree to use ADR. If the Contractor refuses an offer for alternative disputes resolution, the Contractor shall inform the Contracting Officer, in writing, of the Contractor's specific reasons for rejecting the request. When using arbitration conducted pursuant to 5 U.S.C. 575-580, or when using any other ADR technique that the agency elects to handle in accordance with the ADRA, any claim, regardless of amount, shall be accompanied by the certification described in subparagraph (d)(2)(iii) of this clause, and executed in accordance with subparagraph (d)(3) of this clause.

(h) The Government shall pay interest on the amount found due and unpaid from (1) the date that the Contracting Officer receives the claim (certified, if required); or (2) the date that payment otherwise would be due, if that date is later, until the date of payment. With regard to claims having defective certifications, as defined in (FAR) 48 CFR 33.201, interest shall be paid from the date that the Contracting Officer initially receives the claim. Simple interest on claims shall be paid at the rate, fixed by the Secretary of the Treasury as provided in the Act, which is applicable to the period during which the Contracting Officer receives the claim and then at the rate applicable for each 6-month period as fixed by the Treasury Secretary during the pendency of the claim.

(i) The Contractor shall proceed diligently with performance of this contract, pending final resolution of any request for relief, claim, appeal, or action arising under or relating to the contract, and comply with any decision of the Contracting Officer.

(End of clause)

68 52.233-3 PROTEST AFTER AWARD (AUG 1996)

(a) Upon receipt of a notice of protest (as defined in FAR 33.101) or a determination that a protest is likely (see FAR 33.102(d)), the Contracting Officer may, by written order to the Contractor, direct the Contractor to stop performance of the work called for by this contract. The order shall be specifically identified as a stop-work order issued under this clause. Upon receipt of the order, the Contractor shall immediately comply with its terms and take all reasonable steps to minimize the incurrence of costs allocable to the work covered by the order during the period of work stoppage. Upon receipt of the final decision in the protest, the Contracting Officer shall either--

(1) Cancel the stop-work order; or

(2) Terminate the work covered by the order as provided in the Default, or the Termination for Convenience of the Government, clause of this contract.

(b) If a stop-work order issued under this clause is canceled either before or after a final decision in the protest, the Contractor shall

resume work. The Contracting Officer shall make an equitable adjustment in the delivery schedule or contract price, or both, and the contract shall be modified, in writing, accordingly, if--

(1) The stop-work order results in an increase in the time required for, or in the Contractor's cost properly allocable to, the performance of any part of this contract; and

(2) The Contractor asserts its right to an adjustment within 30 days after the end of the period of work stoppage; provided, that if the Contracting Officer decides the facts justify the action, the Contracting Officer may receive and act upon a proposal at any time before final payment under this contract.

(c) If a stop-work order is not canceled and the work covered by the order is terminated for the convenience of the Government, the Contracting Officer shall allow reasonable costs resulting from the stop-work order in arriving at the termination settlement.

(d) If a stop-work order is not canceled and the work covered by the order is terminated for default, the Contracting Officer shall allow, by equitable adjustment or otherwise, reasonable costs resulting from the stop-work order.

(e) The Government's rights to terminate this contract at any time are not affected by action taken under this clause.

(f) If, as the result of the Contractor's intentional or negligent misstatement, misrepresentation, or miscertification, a protest related to this contract is sustained, and the Government pays costs, as provided in FAR 33.102(b)(2) or 33.104(h)(1), the Government may require the Contractor to reimburse the Government the amount of such costs. In addition to any other remedy available, and pursuant to the requirements of Subpart 32.6, the Government may collect this debt by offsetting the amount against any payment due the Contractor under any contract between the Contractor and the Government.

(End of clause)

69 52.236-2 DIFFERING SITE CONDITIONS (APR 1984)

(a) The Contractor shall promptly, and before the conditions are disturbed, give a written notice to the Contracting Officer of (1) subsurface or latent physical conditions at the site which differ materially from those indicated in this contract, or (2) unknown physical conditions at the site, of an unusual nature, which differ materially from those ordinarily encountered and generally recognized as inhering in work of the character provided for in the contract.

(b) The Contracting Officer shall investigate the site conditions promptly after receiving the notice. If the conditions do materially so differ and cause an increase or decrease in the Contractor's cost of, or the time required for, performing any part of the work under this contract, whether or not changed as a result of the conditions, an equitable adjustment shall be made under this clause and the contract modified in writing accordingly.

(c) No request by the Contractor for an equitable adjustment to the contract under this clause shall be allowed, unless the Contractor has given the written notice required; provided, that the time prescribed in (a) above for giving written notice may be extended by the Contracting Officer.

(d) No request by the Contractor for an equitable adjustment to the contract for differing site conditions shall be allowed if made after final payment under this contract.

(End of clause)

70 52.236-3 SITE INVESTIGATION AND CONDITIONS AFFECTING THE WORK (APR 1984)

(a) The Contractor acknowledges that it has taken steps reasonably necessary to ascertain the nature and location of the work, and that it has investigated and satisfied itself as to the general and local conditions which can affect the work or its cost, including but not limited to (1) conditions bearing upon transportation, disposal, handling, and storage of materials; (2) the availability of labor, water, electric power, and roads; (3) uncertainties of weather, river stages, tides, or similar physical conditions at the site; (4) the conformation and conditions of the ground; and (5) the character of equipment and facilities needed preliminary to and during work performance. The Contractor also acknowledges that it has satisfied itself as to the character, quality, and quantity of surface and subsurface materials or obstacles to be encountered insofar as this information is reasonably ascertainable from an inspection of the site, including all exploratory work done by the Government, as well as from the drawings and specifications made a part of this contract. Any failure of the Contractor to take the actions described and acknowledged in this paragraph will not relieve the Contractor from responsibility for estimating properly the difficulty and cost of successfully performing the work, or for proceeding to successfully perform the work without additional expense to the Government.

(b) The Government assumes no responsibility for any conclusions or interpretations made by the Contractor based on the information made available by the Government. Nor does the Government assume responsibility for any understanding reached or representation made concerning conditions which can affect the work by any of its officers or agents before the execution of this contract, unless that understanding or representation is expressly stated in this contract.

(End of clause)

71 52.236-5 MATERIAL AND WORKMANSHIP (APR 1984)

(a) All equipment, material, and articles incorporated into the work covered by this contract shall be new and of the most suitable grade for the purpose intended, unless otherwise specifically provided in this contract. References in the specifications to equipment, material, articles, or patented processes by trade name, make, or catalog number, shall be regarded as establishing a standard of quality and shall not be construed as limiting competition. The Contractor may, at its option, use any equipment, material, article, or process that, in the judgment of the Contracting Officer, is equal to that named in the specifications, unless otherwise specifically provided in this contract.

(b) The Contractor shall obtain the Contracting Officer's approval of the machinery and mechanical and other equipment to be incorporated into the work. When requesting approval, the Contractor shall furnish to the Contracting Officer the name of the manufacturer, the model number, and other information concerning the performance, capacity, nature, and rating of the machinery and mechanical and other equipment. When required by this contract or by the Contracting Officer, the Contractor shall also obtain the Contracting Officer's approval of the material or articles which the Contractor contemplates incorporating into the work. When requesting approval, the Contractor shall provide full information concerning the material or articles. When directed to do so, the

Contractor shall submit samples for approval at the Contractor's expense, with all shipping charges prepaid. Machinery, equipment, material, and articles that do not have the required approval shall be installed or used at the risk of subsequent rejection.

(c) All work under this contract shall be performed in a skillful and workmanlike manner. The Contracting Officer may require, in writing, that the Contractor remove from the work any employee the Contracting Officer deems incompetent, careless, or otherwise objectionable.

(End of clause)

(R 7-602.9 1964 JUN)

72 52.236-6 SUPERINTENDENCE BY THE CONTRACTOR (APR 1984)

At all times during performance of this contract and until the work is completed and accepted, the Contractor shall directly superintend the work or assign and have on the work site a competent superintendent who is satisfactory to the Contracting Officer and has authority to act for the Contractor.

(End of clause)

73 52.236-7 PERMITS AND RESPONSIBILITIES (NOV 1991)

The Contractor shall, without additional expense to the Government, be responsible for obtaining any necessary licenses and permits, and for complying with any Federal, State, and municipal laws, codes, and regulations applicable to the performance of the work. The Contractor shall also be responsible for all damages to persons or property that occur as a result of the Contractor's fault or negligence. The Contractor shall also be responsible for all materials delivered and work performed until completion and acceptance of the entire work, except for any completed unit of work which may have been accepted under the contract.

(End of clause)

74 52.236-8 OTHER CONTRACTS (APR 1984)

The Government may undertake or award other contracts for additional work at or near the site of the work under this contract. The Contractor shall fully cooperate with the other contractors and with Government employees and shall carefully adapt scheduling and performing the work under this contract to accommodate the additional work, heeding any direction that may be provided by the Contracting Officer. The Contractor shall not commit or permit any act that will interfere with the performance of work by any other contractor or by Government employees.

(End of clause)

75 52.236-9 PROTECTION OF EXISTING VEGETATION, STRUCTURES, EQUIPMENT, UTILITIES, AND IMPROVEMENTS (APR 1984)

(a) The Contractor shall preserve and protect all structures, equipment, and vegetation (such as trees, shrubs, and grass) on or adjacent to the work site, which are not to be removed and which do not unreasonably interfere with the work required under this contract. The Contractor shall only remove trees when specifically authorized to do so, and shall

avoid damaging vegetation that will remain in place. If any limbs or branches of trees are broken during contract performance, or by the careless operation of equipment, or by workmen, the Contractor shall trim those limbs or branches with a clean cut and paint the cut with a tree-pruning compound as directed by the Contracting Officer.

(b) The Contractor shall protect from damage all existing improvements and utilities (1) at or near the work site, and (2) on adjacent property of a third party, the locations of which are made known to or should be known by the Contractor. The Contractor shall repair any damage to those facilities, including those that are the property of a third party, resulting from failure to comply with the requirements of this contract or failure to exercise reasonable care in performing the work. If the Contractor fails or refuses to repair the damage promptly, the Contracting Officer may have the necessary work performed and charge the cost to the Contractor.

(End of clause)

76 52.236-10 OPERATIONS AND STORAGE AREAS (APR 1984)

(a) The Contractor shall confine all operations (including storage of materials) on Government premises to areas authorized or approved by the Contracting Officer. The Contractor shall hold and save the Government, its officers and agents, free and harmless from liability of any nature occasioned by the Contractor's performance.

(b) Temporary buildings (e.g., storage sheds, shops, offices) and utilities may be erected by the Contractor only with the approval of the Contracting Officer and shall be built with labor and materials furnished by the Contractor without expense to the Government. The temporary buildings and utilities shall remain the property of the Contractor and shall be removed by the Contractor at its expense upon completion of the work. With the written consent of the Contracting Officer, the buildings and utilities may be abandoned and need not be removed.

(c) The Contractor shall, under regulations prescribed by the Contracting Officer, use only established roadways, or use temporary roadways constructed by the Contractor when and as authorized by the Contracting Officer. When materials are transported in prosecuting the work, vehicles shall not be loaded beyond the loading capacity recommended by the manufacturer of the vehicle or prescribed by any Federal, State, or local law or regulation. When it is necessary to cross curbs or sidewalks, the Contractor shall protect them from damage. The Contractor shall repair or pay for the repair of any damaged curbs, sidewalks, or roads.

(End of clause)

77 52.236-11 USE AND POSSESSION PRIOR TO COMPLETION (APR 1984)

(a) The Government shall have the right to take possession of or use any completed or partially completed part of the work. Before taking possession of or using any work, the Contracting Officer shall furnish the Contractor a list of items of work remaining to be performed or corrected on those portions of the work that the Government intends to take possession of or use. However, failure of the Contracting Officer to list any item of work shall not relieve the Contractor of responsibility for complying with the terms of the contract. The Government's possession or use shall not be deemed an acceptance of any

work under the contract.

(b) While the Government has such possession or use, the Contractor shall be relieved of the responsibility for the loss of or damage to the work resulting from the Government's possession or use, notwithstanding the terms of the clause in this contract entitled "Permits and Responsibilities." If prior possession or use by the Government delays the progress of the work or causes additional expense to the Contractor, an equitable adjustment shall be made in the contract price or the time of completion, and the contract shall be modified in writing accordingly.

(End of clause)

78 52.236-12 CLEANING UP (APR 1984)

The Contractor shall at all times keep the work area, including storage areas, free from accumulations of waste materials. Before completing the work, the Contractor shall remove from the work and premises any rubbish, tools, scaffolding, equipment, and materials that are not the property of the Government. Upon completing the work, the Contractor shall leave the work area in a clean, neat, and orderly condition satisfactory to the Contracting Officer.

(End of clause)

79 52.236-13 ACCIDENT PREVENTION (NOV 1991)

(a) The Contractor shall provide and maintain work environments and procedures which will (1) safeguard the public and Government personnel, property, materials, supplies, and equipment exposed to Contractor operations and activities; (2) avoid interruptions of Government operations and delays in project completion dates; and (3) control costs in the performance of this contract.

(b) For these purposes on contracts for construction or dismantling, demolition, or removal of improvements, the Contractor shall--

(1) Provide appropriate safety barricades, signs, and signal lights;

(2) Comply with the standards issued by the Secretary of Labor at 29 CFR Part 1926 and 29 CFR Part 1910; and

(3) Ensure that any additional measures the Contracting Officer determines to be reasonably necessary for the purposes are taken.

(c) If this contract is for construction or dismantling, demolition or removal of improvements with any Department of Defense agency or component, the Contractor shall comply with all pertinent provisions of the latest version of U.S. Army Corps of Engineers Safety and Health Requirements Manual, EM 385-1-1, in effect on the date of the solicitation.

(d) Whenever the Contracting Officer becomes aware of any noncompliance with these requirements or any condition which poses a serious or imminent danger to the health or safety of the public or Government personnel, the Contracting Officer shall notify the Contractor orally, with written confirmation, and request immediate initiation of corrective action. This notice, when delivered to the Contractor or the Contractor's representative at the work site, shall be deemed sufficient notice of the noncompliance and that corrective action is required. After receiving the notice, the Contractor shall immediately take corrective action. If the Contractor fails or refuses to promptly take corrective action, the Contracting Officer may issue an order stopping all or part of the work until satisfactory corrective action has been taken. The Contractor shall not be entitled to any equitable adjustment of the contract price or extension of

the performance schedule on any stop work order issued under this clause.

(e) The Contractor shall insert this clause, including this paragraph (e), with appropriate changes in the designation of the parties, in subcontracts.

(End of clause)

80 52.236-15 SCHEDULES FOR CONSTRUCTION CONTRACTS (APR 1984)

(a) The Contractor shall, within five days after the work commences on the contract or another period of time determined by the Contracting Officer, prepare and submit to the Contracting Officer for approval three copies of a practicable schedule showing the order in which the Contractor proposes to perform the work, and the dates on which the Contractor contemplates starting and completing the several salient features of the work (including acquiring materials, plant, and equipment). The schedule shall be in the form of a progress chart of suitable scale to indicate appropriately the percentage of work scheduled for completion by any given date during the period. If the Contractor fails to submit a schedule within the time prescribed, the Contracting Officer may withhold approval of progress payments until the Contractor submits the required schedule.

(b) The Contractor shall enter the actual progress on the chart as directed by the Contracting Officer, and upon doing so shall immediately deliver three copies of the annotated schedule to the Contracting Officer. If, in the opinion of the Contracting Officer, the Contractor falls behind the approved schedule, the Contractor shall take steps necessary to improve its progress, including those that may be required by the Contracting Officer, without additional cost to the Government. In this circumstance, the Contracting Officer may require the Contractor to increase the number of shifts, overtime operations, days of work, and/or the amount of construction plant, and to submit for approval any supplementary schedule or schedules in chart form as the Contracting Officer deems necessary to demonstrate how the approved rate of progress will be regained.

(c) Failure of the Contractor to comply with the requirements of the Contracting Officer under this clause shall be grounds for a determination by the Contracting Officer that the Contractor is not prosecuting the work with sufficient diligence to ensure completion within the time specified in the contract. Upon making this determination, the Contracting Officer may terminate the Contractor's right to proceed with the work, or any separable part of it, in accordance with the default terms of this contract.

(End of clause)

81 52.236-21 SPECIFICATIONS AND DRAWINGS FOR CONSTRUCTION (FEB 1997)

(a) The Contractor shall keep on the work site a copy of the drawings and specifications and shall at all times give the Contracting Officer access thereto. Anything mentioned in the specifications and not shown on the drawings, or shown on the drawings and not mentioned in the specifications, shall be of like effect as if shown or mentioned in both. In case of difference between drawings and specifications, the specifications shall govern. In case of discrepancy in the figures, in the drawings, or in the specifications, the matter shall be promptly submitted to the Contracting Officer, who shall promptly make a determination in writing. Any adjustment by the Contractor without such a determination shall be at its own risk and expense. The Contracting Officer shall furnish from time to time such detailed drawings and other information as

considered necessary, unless otherwise provided.

(b) Wherever in the specifications or upon the drawings the words "directed", "required", "ordered", "designated", "prescribed", or words of like import are used, it shall be understood that the "direction", "requirement", "order", "designation", or "prescription", of the Contracting Officer is intended and similarly the words "approved", "acceptable", "satisfactory", or words of like import shall mean "approved by", or "acceptable to", or "satisfactory to" the Contracting Officer, unless otherwise expressly stated.

(c) Where "as shown," "as indicated", "as detailed", or words of similar import are used, it shall be understood that the reference is made to the drawings accompanying this contract unless stated otherwise. The word "provided" as used herein shall be understood to mean "provide complete in place," that is "furnished and installed".

(d) Shop drawings means drawings, submitted to the Government by the Contractor, subcontractor, or any lower tier subcontractor pursuant to a construction contract, showing in detail (1) the proposed fabrication and assembly of structural elements, and (2) the installation (i.e., fit, and attachment details) of materials or equipment. It includes drawings, diagrams, layouts, schematics, descriptive literature, illustrations, schedules, performance and test data, and similar materials furnished by the contractor to explain in detail specific portions of the work required by the contract. The Government may duplicate, use, and disclose in any manner and for any purpose shop drawings delivered under this contract.

(e) If this contract requires shop drawings, the Contractor shall coordinate all such drawings, and review them for accuracy, completeness, and compliance with contract requirements and shall indicate its approval thereon as evidence of such coordination and review. Shop drawings submitted to the Contracting Officer without evidence of the Contractor's approval may be returned for resubmission. The Contracting Officer will indicate an approval or disapproval of the shop drawings and if not approved as submitted shall indicate the Government's reasons therefor. Any work done before such approval shall be at the Contractor's risk. Approval by the Contracting Officer shall not relieve the Contractor from responsibility for any errors or omissions in such drawings, nor from responsibility for complying with the requirements of this contract, except with respect to variations described and approved in accordance with (f) below.

(f) If shop drawings show variations from the contract requirements, the Contractor shall describe such variations in writing, separate from the drawings, at the time of submission. If the Contracting Officer approves any such variation, the Contracting Officer shall issue an appropriate contract modification, except that, if the variation is minor or does not involve a change in price or in time of performance, a modification need not be issued.

(g) The Contractor shall submit to the Contracting Officer for approval four copies (unless otherwise indicated) of all shop drawings as called for under the various headings of these specifications. Three sets (unless otherwise indicated) of all shop drawings, will be retained by the Contracting Officer and one set will be returned to the Contractor.

(End of clause)

82 52.236-26 PRECONSTRUCTION CONFERENCE (FEB 1995)

If the Contracting Officer decides to conduct a preconstruction conference, the successful offeror will be notified and will be required to

attend. The Contracting Officer's notification will include specific details regarding the date, time, and location of the conference, any need for attendance by subcontractors, and information regarding the items to be discussed.

(End of clause)

83 52.236-7000 MODIFICATION PROPOSALS--PRICE BREAKDOWN (DEC 1991)

(a) The Contractor shall furnish a price breakdown, itemized as required and within the time specified by the Contracting Officer, with any proposal for a contract modification.

(b) The price breakdown--

(1) Must include sufficient detail to permit an analysis of profit, and of all costs for--

(i) Material;

(ii) Labor;

(iii) Equipment;

(iv) Subcontracts; and

(v) Overhead; and

(2) Must cover all work involved in the modification, whether the work was deleted, added, or changed.

(c) The Contractor shall provide similar price breakdowns to support any amounts claimed for subcontracts.

(d) The Contractor's proposal shall include a justification for any time extension proposed.

(End of clause)

84 52.236-7009 OPTION FOR SUPERVISION AND INSPECTION SERVICES (DEC 1991)(Reference 36.609-70)

85 52.242-13 BANKRUPTCY (JUL 1995)

In the event the Contractor enters into proceedings relating to bankruptcy, whether voluntary or involuntary, the Contractor agrees to furnish, by certified mail or electronic commerce method authorized by the contract, written notification of the bankruptcy to the Contracting Officer responsible for administering the contract. This notification shall be furnished within five days of the initiation of the proceedings relating to bankruptcy filing. This notification shall include the date on which the bankruptcy petition was filed, the identity of the court in which the bankruptcy petition was filed, and a listing of Government contract numbers and contracting offices for all Government contracts against which final payment has not been made. This obligation remains in effect until final payment under this contract.

(End of clause)

86 52.242-14 SUSPENSION OF WORK (APR 1984)

(a) The Contracting Officer may order the Contractor, in writing, to suspend, delay, or interrupt all or any part of the work of this contract for the period of time that the Contracting Officer determines appropriate for the convenience of the Government.

(b) If the performance of all or any part of the work is, for an unreasonable period of time, suspended, delayed, or interrupted (1) by an act of the Contracting Officer in the administration of this contract, or

(2) by the Contracting Officer's failure to act within the time specified in this contract (or within a reasonable time if not specified), an adjustment shall be made for any increase in the cost of performance of this contract (excluding profit) necessarily caused by the unreasonable suspension, delay, or interruption, and the contract modified in writing accordingly. However, no adjustment shall be made under this clause for any suspension, delay, or interruption to the extent that performance would have been so suspended, delayed, or interrupted by any other cause, including the fault or negligence of the Contractor, or for which an equitable adjustment is provided for or excluded under any other term or condition of this contract.

(c) A claim under this clause shall not be allowed (1) for any costs incurred more than 20 days before the Contractor shall have notified the Contracting Officer in writing of the act or failure to act involved (but this requirement shall not apply as to a claim resulting from a suspension order), and (2) unless the claim, in an amount stated, is asserted in writing as soon as practicable after the termination of the suspension, delay, or interruption, but not later than the date of final payment under the contract.

(End of clause)

87 52.243-4 CHANGES (AUG 1987)

(a) The Contracting Officer may, at any time, without notice to the sureties, if any, by written order designated or indicated to be a change order, make changes in the work within the general scope of the contract, including changes--

(1) In the specifications (including drawings and designs);

(2) In the method or manner of performance of the work;

(3) In the Government-furnished facilities, equipment, materials, services, or site; or

(4) Directing acceleration in the performance of the work.

(b) Any other written or oral order (which, as used in this paragraph (b), includes direction, instruction, interpretation, or determination) from the Contracting Officer that causes a change shall be treated as a change order under this clause; provided, that the Contractor gives the Contracting Officer written notice stating (1) the date, circumstances, and source of the order and (2) that the Contractor regards the order as a change order.

(c) Except as provided in this clause, no order, statement, or conduct of the Contracting Officer shall be treated as a change under this clause or entitle the Contractor to an equitable adjustment.

(d) If any change under this clause causes an increase or decrease in the Contractor's cost of, or the time required for, the performance of any part of the work under this contract, whether or not changed by any such order, the Contracting Officer shall make an equitable adjustment and modify the contract in writing. However, except for an adjustment based on defective specifications, no adjustment for any change under paragraph (b) of this clause shall be made for any costs incurred more than 20 days before the Contractor gives written notice as required. In the case of defective specifications for which the Government is responsible, the equitable adjustment shall include any increased cost reasonably incurred by the Contractor in attempting to comply with the defective specifications.

(e) The Contractor must assert its right to an adjustment under this clause within 30 days after (1) receipt of a written change order under paragraph (a) of this clause or (2) the furnishing of a written notice

under paragraph (b) of this clause, by submitting to the Contracting Officer a written statement describing the general nature and amount of the proposal, unless this period is extended by the Government. The statement of proposal for adjustment may be included in the notice under paragraph (b) above.

(f) No proposal by the Contractor for an equitable adjustment shall be allowed if asserted after final payment under this contract.

(End of clause)

88 52.243-7000 ENGINEERING CHANGE PROPOSALS (SEP 1999)

(a) The Contracting Officer may ask the Contractor to prepare engineering change proposals for engineering changes within the scope of this contract. Upon receipt of a written request from the Contracting Officer, the Contractor shall prepare and submit an engineering change proposal in accordance with the instructions of MIL-STD-973, in effect on the date of contract award.

(b) The Contractor may initiate engineering change proposals. Contractor initiated engineering change proposals shall include a "not to exceed" price price or a "not less than" _____ and delivery adjustment. If the Contracting Officer orders the engineering change, the increase shall not exceed nor the decrease be less than the "not to exceed" or "not less than" amounts.

(c) When the price of the engineering change is $500,000 or more, the Contractor shall submit

(1) A contract pricing proposal using the format in Table 15-2, Section 15.408, of the Federal Acquisition Regulation; and

(2) At the time of agreement on _____ , or on another date agreed upon between the parties, a signed Certificate of Current Cost or Pricing Data.

(End of clause)

89 52.243-7001 PRICING OF CONTRACT MODIFICATIONS (DEC 1991)

When costs are a factor in any price adjustment under this contract, the contract cost principles and procedures in FAR Part 31 and DFARS Part 231, in effect on the date of this contract, apply.

(End of clause)

90 52.244-6 SUBCONTRACTS FOR COMMERCIAL ITEMS AND COMMERCIAL COMPONENTS (OCT 1998)

(a) Definition.

"Commercial item," as used in this clause, has the meaning contained in the clause at 52.202-1, Definitions.

"Subcontract," as used in this clause, includes a transfer of commercial items between divisions, subsidiaries, or affiliates of the Contractor or subcontractor at any tier.

(b) To the maximum extent practicable, the Contractor shall incorporate, and require its subcontractors at all tiers to incorporate, commercial items or nondevelopmental items as components of items to be supplied under this contract.

(c) Notwithstanding any other clause of this contract, the Contractor is

not required to include any FAR provision or clause, other than those listed below to the extent they are applicable and as may be required to establish the reasonableness of prices under Part 15, in a subcontract at any tier for commercial items or commercial components:

(1) 52.222-26, Equal Opportunity (E.O. 11246);

(2) 52.222-35, Affirmative Action for Disabled Veterans and Veterans of the Vietnam Era (38 U.S.C. 4212(a));

(3) 52.222-36, Affirmative Action for Workers with Disabilities (29 U.S.C.793); and

(4) 52.247-64, Preference for Privately Owned U.S.-Flagged Commercial Vessels (46 U.S.C. 1241) (flow down not required for subcontracts awarded beginning May 1, 1996).

(d) The Contractor shall include the terms of this clause, including this paragraph (d), in subcontracts awarded under this contract.

(End of clause)

91 52.246-12 INSPECTION OF CONSTRUCTION (AUG 1996)

(a) Definition. "Work" includes, but is not limited to, materials, workmanship, and manufacture and fabrication of components.

(b) The Contractor shall maintain an adequate inspection system and perform such inspections as will ensure that the work performed under the contract conforms to contract requirements. The Contractor shall maintain complete inspection records and make them available to the Government. All work shall be conducted under the general direction of the Contracting Officer and is subject to Government inspection and test at all places and at all reasonable times before acceptance to ensure strict compliance with the terms of the contract.

(c) Government inspections and tests are for the sole benefit of the Government and do not--

(1) Relieve the Contractor of responsibility for providing adequate quality control measures;

(2) Relieve the Contractor of responsibility for damage to or loss of the material before acceptance;

(3) Constitute or imply acceptance; or

(4) Affect the continuing rights of the Government after acceptance of the completed work under paragraph (i) below.

(d) The presence or absence of a Government inspector does not relieve the Contractor from any contract requirement, nor is the inspector authorized to change any term or condition of the specification without the Contracting Officer's written authorization.

(e) The Contractor shall promptly furnish, at no increase in contract price, all facilities, labor, and material reasonably needed for performing such safe and convenient inspections and tests as may be required by the Contracting Officer. The Government may charge to the Contractor any additional cost of inspection or test when work is not ready at the time specified by the Contractor for inspection or test, or when prior rejection makes reinspection or retest necessary. The Government shall perform all inspections and tests in a manner that will not unnecessarily delay the work. Special, full size, and performance tests shall be performed as described in the contract.

(f) The Contractor shall, without charge, replace or correct work found by the Government not to conform to contract requirements, unless in the public interest the Government consents to accept the work with an appropriate adjustment in contract price. The Contractor shall promptly segregate and remove rejected material from the premises.

(g) If the Contractor does not promptly replace or correct rejected work, the Government may (1) by contract or otherwise, replace or correct the work and charge the cost to the Contractor or (2) terminate for default the Contractor's right to proceed.

(h) If, before acceptance of the entire work, the Government decides to examine already completed work by removing it or tearing it out, the Contractor, on request, shall promptly furnish all necessary facilities, labor, and material. If the work is found to be defective or nonconforming in any material respect due to the fault of the Contractor or its subcontractors, the Contractor shall defray the expenses of the examination and of satisfactory reconstruction. However, if the work is found to meet contract requirements, the Contracting Officer shall make an equitable adjustment for the additional services involved in the examination and reconstruction, including, if completion of the work was thereby delayed, an extension of time.

(i) Unless otherwise specified in the contract, the Government shall accept, as promptly as practicable after completion and inspection, all work required by the contract or that portion of the work the Contracting Officer determines can be accepted separately. Acceptance shall be final and conclusive except for latent defects, fraud, gross mistakes amounting to fraud, or the Government's rights under any warranty or guarantee.

(End of clause)

92 52.248-3 VALUE ENGINEERING--CONSTRUCTION (MAR 1989)

(a) General. The Contractor is encouraged to develop, prepare, and submit value engineering change proposals (VECP's) voluntarily. The Contractor shall share in any instant contract savings realized from accepted VECP's, in accordance with paragraph (f) below.

(b) Definitions. "Collateral costs," as used in this clause, means agency costs of operation, maintenance, logistic support, or Government-furnished property.

"Collateral savings," as used in this clause, means those measurable net reductions resulting from a VECP in the agency's overall projected collateral costs, exclusive of acquisition savings, whether or not the acquisition cost changes.

"Contractor's development and implementation costs," as used in this clause, means those costs the Contractor incurs on a VECP specifically in developing, testing, preparing, and submitting the VECP, as well as those costs the Contractor incurs to make the contractual changes required by Government acceptance of a VECP.

"Government costs," as used in this clause, means those agency costs that result directly from developing and implementing the VECP, such as any net increases in the cost of testing, operations, maintenance, and logistic support. The term does not include the normal administrative costs of processing the VECP.

"Instant contract savings," as used in this clause, means the estimated reduction in Contractor cost of performance resulting from acceptance of the VECP, minus allowable Contractor's development and implementation costs, including subcontractors' development and implementation costs (see paragraph (h) below).

"Value engineering change proposal (VECP)" means a proposal that--

(1) Requires a change to this, the instant contract, to implement; and

(2) Results in reducing the contract price or estimated cost without impairing essential functions or characteristics; provided, that it does not involve a change--

(i) In deliverable end item quantities only; or

(ii) To the contract type only.

(c) VECP preparation. As a minimum, the Contractor shall include in each VECP the information described in subparagraphs (1) through (7) below. If the proposed change is affected by contractually required configuration management or similar procedures, the instructions in those procedures relating to format, identification, and priority assignment shall govern VECP preparation. The VECP shall include the following:

(1) A description of the difference between the existing contract requirement and that proposed, the comparative advantages and disadvantages of each, a justification when an item's function or characteristics are being altered, and the effect of the change on the end item's performance.

(2) A list and analysis of the contract requirements that must be changed if the VECP is accepted, including any suggested specification revisions.

(3) A separate, detailed cost estimate for (i) the affected portions of the existing contract requirement and (ii) the VECP. The cost reduction associated with the VECP shall take into account the Contractor's allowable development and implementation costs, including any amount attributable to subcontracts under paragraph (h) below.

(4) A description and estimate of costs the Government may incur in implementing the VECP, such as test and evaluation and operating and support costs.

(5) A prediction of any effects the proposed change would have on collateral costs to the agency.

(6) A statement of the time by which a contract modification accepting the VECP must be issued in order to achieve the maximum cost reduction, noting any effect on the contract completion time or delivery schedule.

(7) Identification of any previous submissions of the VECP, including the dates submitted, the agencies and contract numbers involved, and previous Government actions, if known.

(d) Submission. The Contractor shall submit VECP's to the Resident Engineer at the worksite, with a copy to the Contracting Officer.

(e) Government action. (1) The Contracting Officer shall notify the Contractor of the status of the VECP within 45 calendar days after the contracting office receives it. If additional time is required, the Contracting Officer shall notify the Contractor within the 45-day period and provide the reason for the delay and the expected date of the decision. The Government will process VECP's expeditiously; however, it shall not be liable for any delay in acting upon a VECP.

(2) If the VECP is not accepted, the Contracting Officer shall notify the Contractor in writing, explaining the reasons for rejection. The Contractor may withdraw any VECP, in whole or in part, at any time before it is accepted by the Government. The Contracting Officer may require that the Contractor provide written notification before undertaking significant expenditures for VECP effort.

(3) Any VECP may be accepted, in whole or in part, by the Contracting Officer's award of a modification to this contract citing this clause. The Contracting Officer may accept the VECP, even though an agreement on price reduction has not been reached, by issuing the Contractor a notice to proceed with the change. Until a notice to proceed is issued or a contract modification applies a VECP to this contract, the Contractor shall perform in accordance with the existing contract. The Contracting Officer's decision to accept or reject all or part of any VECP shall be final and not subject to the Disputes clause or otherwise subject to litigation under the Contract Disputes Act of 1978 (41 U.S.C. 601-613).

(f) Sharing. (1) Rates. The Government's share of savings is determined by subtracting Government costs from instant contract savings and multiplying the result by (i) 45 percent for fixed-price contracts or (ii) 75 percent for cost-reimbursement contracts.

(2) Payment. Payment of any share due the Contractor for use of a VECP on this contract shall be authorized by a modification to this contract to--

(i) Accept the VECP;

(ii) Reduce the contract price or estimated cost by the amount of instant contract savings; and

(iii) Provide the Contractor's share of savings by adding the amount calculated to the contract price or fee.

(g) Collateral savings. If a VECP is accepted, the instant contract amount shall be increased by 20 percent of any projected collateral savings determined to be realized in a typical year of use after subtracting any Government costs not previously offset. However, the Contractor's share of collateral savings shall not exceed (1) the contract's firm-fixed-price or estimated cost, at the time the VECP is accepted, or (2) $100,000, whichever is greater. The Contracting Officer shall be the sole determiner of the amount of collateral savings, and that amount shall not be subject to the Disputes clause or otherwise subject to litigation under 41 U.S.C. 601-613.

(h) Subcontracts. The Contractor shall include an appropriate value engineering clause in any subcontract of $50,000 or more and may include one in subcontracts of lesser value. In computing any adjustment in this contract's price under paragraph (f) above, the Contractor's allowable development and implementation costs shall include any subcontractor's allowable development and implementation costs clearly resulting from a VECP accepted by the Government under this contract, but shall exclude any value engineering incentive payments to a subcontractor. The Contractor may choose any arrangement for subcontractor value engineering incentive payments; provided, that these payments shall not reduce the Government's share of the savings resulting from the VECP.

(i) Data. The Contractor may restrict the Government's right to use any part of a VECP or the supporting data by marking the following legend on the affected parts:

"These data, furnished under the Value Engineering--Construction clause of contract _____, shall not be disclosed outside the Government or duplicated, used, or disclosed, in whole or in part, for any purpose other than to evaluate a value engineering change proposal submitted under the clause. This restriction does not limit the Government's right to use information contained in these data if it has been obtained or is otherwise available from the Contractor or from another source without limitations."

If a VECP is accepted, the Contractor hereby grants the Government unlimited rights in the VECP and supporting data, except that, with respect to data qualifying and submitted as limited rights technical data, the Government shall have the rights specified in the contract modification implementing the VECP and shall appropriately mark the data. (The terms "unlimited rights" and "limited rights" are defined in Part 27 of the Federal Acquisition Regulation.)

(End of clause)

93 52.248-7000 PREPARATION OF VALUE ENGINEERING CHANGE PROPOSALS (MAY 1994)

Prepare value engineering change proposals, for submission pursuant to the value engineering clause of this contract, in the format prescribed by the version of MIL-STD-973 in effect on the date of contract award.

(End of clause)

94 52.249-2 I TERMINATION FOR CONVENIENCE OF THE GOVERNMENT (FIXED-PRICE) (SEP 1996)--ALTERNATE I (SEP 1996)

(a) The Government may terminate performance of work under this contract in whole or, from time to time, in part if the Contracting Officer determines that a termination is in the Government's interest. The Contracting Officer shall terminate by delivering to the Contractor a Notice of Termination specifying the extent of termination and the effective date.

(b) After receipt of a Notice of Termination, and except as directed by the Contracting Officer, the Contractor shall immediately proceed with the following obligations, regardless of any delay in determining or adjusting any amounts due under this clause:

(1) Stop work as specified in the notice.

(2) Place no further subcontracts or orders (referred to as subcontracts in this clause) for materials, services, or facilities, except as necessary to complete the continued portion of the contract.

(3) Terminate all subcontracts to the extent they relate to the work terminated.

(4) Assign to the Government, as directed by the Contracting Officer, all right, title, and interest of the Contractor under the subcontracts terminated, in which case the Government shall have the right to settle or to pay any termination settlement proposal arising out of those terminations.

(5) With approval or ratification to the extent required by the Contracting Officer, settle all outstanding liabilities and termination settlement proposals arising from the termination of subcontracts; the approval or ratification will be final for purposes of this clause.

(6) As directed by the Contracting Officer, transfer title and deliver to the Government (i) the fabricated or unfabricated parts, work in process, completed work, supplies, and other material produced or acquired for the work terminated, and (ii) the completed or partially completed plans, drawings, information, and other property that, if the contract had been completed, would be required to be furnished to the Government.

(7) Complete performance of the work not terminated.

(8) Take any action that may be necessary, or that the Contracting Officer may direct, for the protection and preservation of the property related to this contract that is in the possession of the Contractor and in which the Government has or may acquire an interest.

(9) Use its best efforts to sell, as directed or authorized by the Contracting Officer, any property of the types referred to in subparagraph (b)(6) of this clause; provided, however, that the Contractor (i) is not required to extend credit to any purchaser and (ii) may acquire the property under the conditions prescribed by, and at prices approved by, the Contracting Officer. The proceeds of any transfer or disposition will be applied to reduce any payments to be made by the Government under this contract, credited to the price or cost of the work, or paid in any other manner directed by the Contracting Officer.

(c) The Contractor shall submit complete termination inventory schedules

no later than 120 days from the effective date of termination, unless extended in writing by the Contracting Officer upon written request of the Contractor within this 120-day period.

(d) After expiration of the plant clearance period as defined in Subpart 45.6 of the Federal Acquisition Regulation, the Contractor may submit to the Contracting Officer a list, certified as to quantity and quality, of termination inventory not previously disposed of, excluding items authorized for disposition by the Contracting Officer. The Contractor may request the Government to remove those items or enter into an agreement for their storage. Within 15 days, the Government will accept title to those items and remove them or enter into a storage agreement. The Contracting Officer may verify the list upon removal of the items, or if stored, within 45 days from submission of the list, and shall correct the list, as necessary, before final settlement.

(e) After termination, the Contractor shall submit a final termination settlement proposal to the Contracting Officer in the form and with the certification prescribed by the Contracting Officer. The Contractor shall submit the proposal promptly, but no later than 1 year from the effective date of termination, unless extended in writing by the Contracting Officer upon written request of the Contractor within this 1 year period. However, if the Contracting Officer determines that the facts justify it, a termination settlement proposal may be received and acted on after 1 year or any extension. If the Contractor fails to submit the proposal within the time allowed, the Contracting Officer may determine, on the basis of information available, the amount, if any, due the Contractor because of the termination and shall pay the amount determined.

(f) Subject to paragraph (e) of this clause, the Contractor and the Contracting Officer may agree upon the whole or any part of the amount to be paid or remaining to be paid because of the termination. The amount may include a reasonable allowance for profit on work done. However, the agreed amount, whether under this paragraph (f) or paragraph (g) of this clause, exclusive of costs shown in subparagraph (g)(3) of this clause, may not exceed the total contract price as reduced by (1) the amount of payments previously made and (2) the contract price of work not terminated. The contract shall be modified, and the Contractor paid the agreed amount. Paragraph (g) of this clause shall not limit, restrict, or affect the amount that may be agreed upon to be paid under this paragraph.

(g) If the Contractor and Contracting Officer fail to agree on the whole amount to be paid the Contractor because of the termination of work, the Contracting Officer shall pay the Contractor the amounts determined as follows, but without duplication of any amounts agreed upon under paragraph (f) of this clause:

(1) For contract work performed before the effective date of termination, the total (without duplication of any items) of--

(i) The cost of this work;

(ii) The cost of settling and paying termination settlement proposals under terminated subcontracts that are properly chargeable to the terminated portion of the contract if not included in subdivision (g)(1)(i) of this clause; and

(iii) A sum, as profit on subdivision (g)(1)(i) of this clause, determined by the Contracting Officer under 49.202 of the Federal Acquisition Regulation, in effect on the date of this contract, to be fair and reasonable; however, if it appears that the Contractor would have sustained a loss on the entire contract had it been completed, the Contracting Officer shall allow no profit under this subdivision (iii) and shall reduce the settlement to reflect the indicated rate of loss.

(2) The reasonable costs of settlement of the work terminated,

including--

(i) Accounting, legal, clerical, and other expenses reasonably necessary for the preparation of termination settlement proposals and supporting data;

(ii) The termination and settlement of subcontracts (excluding the amounts of such settlements); and

(iii) Storage, transportation, and other costs incurred, reasonably necessary for the preservation, protection, or disposition of the termination inventory.

(h) Except for normal spoilage, and except to the extent that the Government expressly assumed the risk of loss, the Contracting Officer shall exclude from the amounts payable to the Contractor under paragraph (g) of this clause, the fair value, as determined by the Contracting Officer, of property that is destroyed, lost, stolen, or damaged so as to become undeliverable to the Government or to a buyer.

(i) The cost principles and procedures of Part 31 of the Federal Acquisition Regulation, in effect on the date of this contract, shall govern all costs claimed, agreed to, or determined under this clause.

(j) The Contractor shall have the right of appeal, under the Disputes clause, from any determination made by the Contracting Officer under paragraph (e), (g), or (l) of this clause, except that if the Contractor failed to submit the termination settlement proposal or request for equitable adjustment within the time provided in paragraph (e) or (l), respectively, and failed to request a time extension, there is no right of appeal.

(k) In arriving at the amount due the Contractor under this clause, there shall be deducted--

(1) All unliquidated advance or other payments to the Contractor under the terminated portion of this contract;

(2) Any claim which the Government has against the Contractor under this contract; and

(3) The agreed price for, or the proceeds of sale of, materials, supplies, or other things acquired by the Contractor or sold under the provisions of this clause and not recovered by or credited to the Government.

(l) If the termination is partial, the Contractor may file a proposal with the Contracting Officer for an equitable adjustment of the price(s) of the continued portion of the contract. The Contracting Officer shall make any equitable adjustment agreed upon. Any proposal by the Contractor for an equitable adjustment under this clause shall be requested within 90 days from the effective date of termination unless extended in writing by the Contracting Officer.

(m)(1) The Government may, under the terms and conditions it prescribes, make partial payments and payments against costs incurred by the Contractor for the terminated portion of the contract, if the Contracting Officer believes the total of these payments will not exceed the amount to which the Contractor will be entitled.

(2) If the total payments exceed the amount finally determined to be due, the Contractor shall repay the excess to the Government upon demand, together with interest computed at the rate established by the Secretary of the Treasury under 50 U.S.C. App. 1215(b)(2). Interest shall be computed for the period from the date the excess payment is received by the Contractor to the date the excess is repaid. Interest shall not be charged on any excess payment due to a reduction in the Contractor's termination settlement proposal because of retention or other disposition of termination inventory until 10 days after the date of the retention or disposition, or a later date determined by the

Contracting Officer because of the circumstances.

(n) Unless otherwise provided in this contract or by statute, the Contractor shall maintain all records and documents relating to the terminated portion of this contract for 3 years after final settlement. This includes all books and other evidence bearing on the Contractor's costs and expenses under this contract. The Contractor shall make these records and documents available to the Government, at the Contractor's office, at all reasonable times, without any direct charge. If approved by the Contracting Officer, photographs, microphotographs, or other authentic reproductions may be maintained instead of original records and documents.

(End of clause)

95 52.249-10 DEFAULT (FIXED-PRICE CONSTRUCTION) (APR 1984)

(a) If the Contractor refuses or fails to prosecute the work or any separable part, with the diligence that will insure its completion within the time specified in this contract including any extension, or fails to complete the work within this time, the Government may, by written notice to the Contractor, terminate the right to proceed with the work (or the separable part of the work) that has been delayed. In this event, the Government may take over the work and complete it by contract or otherwise, and may take possession of and use any materials, appliances, and plant on the work site necessary for completing the work. The Contractor and its sureties shall be liable for any damage to the Government resulting from the Contractor's refusal or failure to complete the work within the specified time, whether or not the Contractor's right to proceed with the work is terminated. This liability includes any increased costs incurred by the Government in completing the work.

(b) The Contractor's right to proceed shall not be terminated nor the Contractor charged with damages under this clause, if-

(1) The delay in completing the work arises from unforeseeable causes beyond the control and without the fault or negligence of the Contractor. Examples of such causes include (i) acts of God or of the public enemy, (ii) acts of the Government in either its sovereign or contractual capacity, (iii) acts of another Contractor in the performance of a contract with the Government, (iv) fires, (v) floods, (vi) epidemics, (vii) quarantine restrictions, (viii) strikes, (ix) freight embargoes, (x) unusually severe weather, or (xi) delays of subcontractors or suppliers at any tier arising from unforeseeable causes beyond the control and without the fault or negligence of both the Contractor and the subcontractors or suppliers; and

(2) The Contractor, within 10 days from the beginning of any delay (unless extended by the Contracting Officer), notifies the Contracting Officer in writing of the causes of delay. The Contracting Officer shall ascertain the facts and the extent of delay. If, in the judgment of the Contracting Officer, the findings of fact warrant such action, the time for completing the work shall be extended. The findings of the Contracting Officer shall be final and conclusive on the parties, but subject to appeal under the Disputes clause.

(c) If, after termination of the Contractor's right to proceed, it is determined that the Contractor was not in default, or that the delay was excusable, the rights and obligations of the parties will be the same as if the termination had been issued for the convenience of the Government.

(d) The rights and remedies of the Government in this clause are in addition to any other rights and remedies provided by law or under this contract.

(End of clause)

96 52.249-5000 BASIS FOR SETTLEMENT OF PROPOSALS

Actual costs will be used to determine equipment costs for a settlement proposal submitted on the total cost basis under FAR 49.206-2(b). In evaluating a terminations settlement proposal using the total cost basis, the following principiles will be applied to determine allowable equipment costs:

(1) Actual costs for each piece of equipment, or groups of similar serial or series equipment, need not be available in the contractor's accounting records to determine total actual equipment costs.

(2) If equipment costs have been allocated to a contract using predetermined rates , those charges will be adjusted to actual costs.

(3) Recorded job costs adjusted for unallowable expenses will be used to determine equipment operating expenses.

(4) Ownership costs (depreciation) will be determined using the contractor's depreciation schedule (subject to the provisions of FAR 31.205-11).

(5) License, taxes, storage and insurance costs are normally recovered as an indirect expense and unless the contractor charges these costs directly to contracts, they will be recovered through the indirect expense rate.

(End of Statement)

97 52.252-4 ALTERATIONS IN CONTRACT (APR 1984)

Portions of this contract are altered as follows:

_____

(End of clause)
(R 7-105.1(a) 1949 JUL)

98 52.253-1 COMPUTER GENERATED FORMS (JAN 1991)

(a) Any data required to be submitted on a Standard or Optional Form prescribed by the Federal Acquisition Regulation (FAR) may be submitted on a computer generated version of the form, provided there is no change to the name, content, or sequence of the data elements on the form, and provided the form carries the Standard or Optional Form number and edition date.

(b) Unless prohibited by agency regulations, any data required to be submitted on an agency unique form prescribed by an agency supplement to the FAR may be submitted on a computer generated version of the form provided there is no change to the name, content, or sequence of the data elements on the form and provided the form carries the agency form number and edition date.

(c) If the Contractor submits a computer generated version of a form that is different than the required form, then the rights and obligations of the parties will be determined based on the content of the required form.

(End of clause)

END OF SECTION 00700

This page intentionally blank

TABLE OF CONTENTS

SPECIAL CLAUSES

PARAGRAPH NO.	PARAGRAPH TITLE
SC-1	COMMENCEMENT, PROSECUTION, AND COMPLETION OF WORK
SC-1.1	DELETED - OPTION FOR INCREASED QUANTITY
SC-2	LIQUIDATED DAMAGES - CONSTRUCTION
SC-3	DELETED - TIME EXTENSIONS
SC-4	DELETED - VARIATIONS IN ESTIMATED QUANTITIES - SUBDIVIDED ITEMS
SC-5	INSURANCE - WORK ON A GOVERNMENT INSTALLATION
SC-6	DELETED - CONTINUING CONTRACTS
SC-7	PERFORMANCE OF WORK BY THE CONTRACTOR
SC-8	PHYSICAL DATA
SC-9	DELETED - QUANTITY SURVEYS
SC-10	LAYOUT OF WORK
SC-11	DELETED - PAYMENT FOR MOBILIZATION AND DEMOBILIZATION
SC-12	DELETED - AIRFIELD SAFETY PRECAUTIONS
SC-13	DELETED - IDENTIFICATION OF GOVERNMENT-FURNISHED PROPERTY
SC-14	EQUIPMENT OWNERSHIP AND OPERATING EXPENSE SCHEDULE
SC-15	PAYMENT FOR MATERIALS DELIVERED OFF-SITE
SC-16	DELETED - ORDER OF PRECEDENCE
SC-17	DELETED - LIMITATION OF PAYMENT FOR DESIGN
SC-18	CONTRACT DRAWINGS, MAPS AND SPECIFICATIONS
SC-19.	DELETED - TECHNICAL PROPOSAL - COPIES TO BE FURNISHED UPON AWARD
SC-20.	DELETED - COMPLIANCE CERTIFICATION

SC-21. DELETED - VALUE ENGINEERING

SC-22. EPA ENERGY STAR

SC-23 YEAR 2000 COMPLIANCE

SC-24 RECOVERED MATERIALS

SPECIAL CLAUSES

SC-1. COMMENCEMENT, PROSECUTION, AND COMPLETION OF WORK (APR 1984) (FAR 52.211-10).

The Contractor shall be required to (a) commence work under this Contract within 10 calendar days after the date the Contractor receives the notice to proceed, (b) prosecute the work diligently, and (c) complete the entire work ready for use not later than 500 calendar days after date of receipt by Contractor of notice to proceed. The time stated for completion shall include final cleanup of the premises.

SC-1.1 Exception to Completion Period(s): In case the Contracting Officer determines that completion of seeding, sodding, and planting, and establishment of same is not feasible within the completion period(s) stated above, the Contractor shall accomplish such work in the first planting period following the contract completion period and shall complete such work as specified, unless other planting periods are directed or approved by the Contracting Officer.

SC-2. LIQUIDATED DAMAGES - CONSTRUCTION (APR 1984) (FAR 52.211-12)

(a) If the Contractor fails to complete the work within the time specified in the Contract, or any extension, the Contractor shall pay to the Government as liquidated damages, the sum of $1,239.00 for each day of delay.

(b) If the Government terminates the Contractor's right to proceed, the resulting damage will consist of liquidated damages until such reasonable time as may be required for final completion of the work together with any increased costs occasioned the Government in completing the work.

(c) If the Government does not terminate the Contractor's right to proceed, the resulting damage will consist of liquidated damages until the work is completed or accepted.

(d) Exception to Liquidated Damage: In case the Contracting Officer determines that completion of work stated above in paragraph Exception to Completion Period(s) is not feasible during the completion period(s) stated in SC-1, such work will be exempted from liquidated damages.

SC-3. AND SC-4. DELETED.

SC-5. INSURANCE - WORK ON A GOVERNMENT INSTALLATION (SEP 1989) (FAR 52.228-5)

(a) The Contractor shall, at its own expense, provide and maintain during the entire performance period of this Contract at least the kinds and minimum amounts of insurance required in the Insurance Liability Schedule or elsewhere in the Contract.

(b) Before commencing work under this Contract, the Contractor shall certify to the Contracting Officer in writing that the required insurance has been obtained. The policies evidencing required insurance shall contain an endorsement to the effect that any cancellation or any material change adversely affecting the Government's interest shall not be effective:

(1) for such period as the laws of the State in which this Contract is to be performed prescribe; or

(2) until 30 days after the insurer or the Contractor gives written notice to the Contracting Officer, whichever period is longer.

(c) The Contractor shall insert the substance of this clause, including this paragraph (c), in subcontracts under this Contract that require work on a Government installation and shall require subcontractors to provide and maintain the insurance required in the Schedule or elsewhere in the Contract. The Contractor shall maintain a copy of all subcontractors' proofs of required insurance, and shall make copies available to the Contracting Officer upon request.

(d) Insurance Liability Schedule (FAR 28.307-2)

(1) Workers' compensation and employer's liability. Contractors are required to comply with applicable Federal and State workers' compensation and occupational disease statutes. If occupational diseases are not compensable under those statutes, they shall be covered under the employer's liability section of the insurance policy, except when Contract operations are so commingled with a Contractor's commercial operation that it would not be practical to require this coverage. Employer's liability coverage of at least $100,000 shall be required, except in states with exclusive or monopolistic funds that do not permit workers' compensation to be written by private carriers.

(2) General Liability.

(a) The Contracting Officer shall require bodily injury liability insurance coverage written on the comprehensive form of policy of at least $500,000 per occurrence.

(b) Property damage liability insurance shall be required only in special circumstances as determined by the agency.

(3) Automobile liability. The Contracting Officer shall require automobile liability insurance written on the comprehensive form of policy. The policy shall provide for bodily injury and property damage liability covering the operation of all automobiles used in connection with performing the Contract. Policies covering automobiles operated in the United States shall provide coverage of at least $200,000 per person and $500,000 per occurrence for bodily injury and $20,000 per occurrence for property damage. The amount of liability coverage on other policies shall be commensurate with any legal requirements of the locality and sufficient to meet normal and customary claims.

(4) Aircraft public and passenger liability. When aircraft are used in connection with performing the Contract, the Contracting Officer shall require aircraft public and passenger liability insurance. Coverage shall be at least $200,000 per person and $500,000 per occurrence for bodily injury, other than passenger liability, and $200,000 per occurrence for property damage. Coverage for passenger liability bodily injury shall be at least $200,000 multiplied by the number of seats or passengers, whichever is greater.

(5) Vessel liability. When Contract performance involves use of vessels, the Contracting Officer shall require, as determined by the agency, vessel collision liability and protection and indemnity liability insurance.

(6) Environmental Liability If this contract includes the trnsport, treatment, storage, or disposal of hazardous material waste the following coverage is required.

The Contractor shall ensure the transporter and disposal facility have liability insurance if effect for claims arising out of the death or bodily injury and property damage from hazardous material/waste transport, treatment, storage and disposal, including vehicle liability and legal defense costs in the amount of

$1,000,000.00 as evidenced by a certificate of insurance for General, Automobile, and Environmental Liability Coverage. Proof of this insurance shall be provided to the Contracting Officer.

SC-6. DELETED.

SC-7. PERFORMANCE OF WORK BY THE CONTRACTOR (APR 1984) (FAR 52.236-1): The Contractor shall perform on the site, and with its own organization, work equivalent to at least fifteen percent (15 %) of the total amount of work to be performed under the Contract. The percentage may be reduced by a supplemental agreement to this Contract if, during performing the work, the Contractor requests a reduction and the Contracting Officer determines that the reduction would be to the advantage of the Government.

SC-8. PHYSICAL DATA (APR 1984) (FAR 52.236-4): Data and information furnished or referred to below is for the Contractor's information. The Government will not be responsible for any interpretation of or conclusion drawn from the data or information by the Contractor.

(a) Physical Conditions: The indications of physical conditions on the drawings and in the specifications are the result of site investigations by test holes shown on the drawings.

(b) Weather Conditions: Each bidder shall be satisfied before submitting his bid as to the hazards likely to arise from weather conditions. Complete weather records and reports may be obtained from any National Weather Service Office.

(c) Transportation Facilities: Each bidder, before submitting his bid, shall make an investigation of the conditions of existing public and private roads and of clearances, restrictions, bridge load limits, and other limitations affecting transportation and ingress and egress at the jobsite. The unavailability of transportation facilities or limitations thereon shall not become a basis for claims for damages or extension of time for completion of the work.

SC-9. DELETED.

SC-10. LAYOUT OF WORK (APR 1984) (FAR 52.236-17): The Contractor shall lay out its work from Government-established base lines and bench marks indicated on the drawings, and shall be responsible for all measurements in connection with the layout. The Contractor shall furnish, at its own expense, all stakes, templates, platforms, equipment, tools, materials, and labor required to lay out any part of the work. The Contractor shall be responsible for executing the work to the lines and grades that may be established or indicated by the Contracting Officer. The Contractor shall also be responsible for maintaining and preserving all stakes and other marks established by the Contracting Officer until authorized to remove them. If such marks are destroyed by the Contractor or through its negligence before their removal is authorized, the Contracting Officer may replace them and deduct the expense of the replacement from any amounts due, or to become due, to the Contractor.

SC-11. THROUGH SC-13. DELETED.

SC-14. EQUIPMENT OWNERSHIP AND OPERATING EXPENSE SCHEDULE (MAR 1995)-(EFARS 52.231-5000)

(a) This clause does not apply to terminations. See 52.249-5000, Basis for Settlement of Proposals and FAR Part 49.

(b) Allowable cost for construction and marine plant and equipment in sound workable condition owned or controlled and furnished by a contractor or subcontractor at any tier shall be based on actual cost data for each piece of equipment or groups of similar serial and series for which the Government can determine both ownership and operating costs from the contractor's accounting records. When both ownership and operating costs cannot be determined for any piece of equipment or groups of similar serial or series equipment from the contractor's accounting records, costs for that equipment shall be based upon the applicable provisions of EP 1110-1-8, Construction Equipment Ownership and Operating Expense Schedule, Region VIII. Working conditions shall be considered to be average for determining equipment rates using the schedule unless specified otherwise by the contracting officer. For equipment not included in the schedule, rates for comparable pieces of equipment may be used or a rate may be developed using the formula provided in the schedule. For forward pricing, the schedule in effect at the time of negotiations shall apply. For retroactive pricing, the schedule in effect at the time the work was performed shall apply.

(c) Equipment rental costs are allowable, subject to the provisions of FAR 31.105(d)(ii) and FAR 31.205-36. Rates for equipment rented from an organization under common control, lease-purchase arrangements, and sale-leaseback arrangements, will be determined using the schedule, except that actual rates will be used for equipment leased from an organization under common control that has an established practice of leasing the same or similar equipment to unaffiliated lessees.

(d) When actual equipment costs are proposed and the total amount of the pricing action exceeds the small purchase threshold, the contracting officer shall request the contractor to submit either certified cost or pricing data, or partial/limited data, as appropriate. The data shall be submitted on Standard Form 1411, Contract Pricing Proposal Cover Sheet.

(e) Copies of EP1110-1-8 “Construction Equipment Ownership and Operating Expense Schedule” Volume 4 (Montana) and Volume 8 (Washington, Oregon and Idaho) are available from the Superintendent of Documents, P.O. Box 371954, Pittsburg, PA 15250-7954, phone (202) 512-1800 and fax (202) 512-2250, OR from the Government Bookstore in the Jackson Federal Building, Seattle, WA, phone (206) 553-4279. The cost is $33.00 for each volume. Use the following stock numbers when ordering schedules:

S/N 008-022-00317-7	Volume 4
S/N 008-022-00321-5	Volume 8

SC-15. PAYMENT FOR MATERIALS DELIVERED OFF-SITE (MAR 1995)-(EFARS 52.232-5000)

(a) Pursuant to FAR clause 52.232-5, Payments Under Fixed Priced Construction Contracts, materials delivered to the contractor at locations other than the site of the work may be taken into consideration in making payments if included in payment estimates and if all the conditions of the General Provisions are fulfilled. Payment for items delivered to locations other than the work site will be limited to: (1) materials required by the technical provisions; or (2) materials that have been fabricated to the point where they are identifiable to an item of work required under this contract.

(b) Such payment will be made only after receipt of paid or receipted invoices or invoices with canceled check showing title to the items in the prime contractor and including the value of material and labor incorporated into the item. In addition to petroleum products, payment for materials delivered off-site is limited to the following items: Any other construction material stored offsite may be considered in determining the amount of a progress payment.

SC-16. AND SC-17. DELETED.

SC-18. CONTRACT DRAWINGS, MAPS, AND SPECIFICATIONS (OCT 1996) (52.0236-4001 EBS)

(a) The Government--

(1) Will provide the Contractor, without charge, one set of contract drawings and one set of specifications in electronic format on a compact disk. The Government will not give the Contractor any hard copy paper drawings or specifications for any contract resulting from this solicitation.

(b) The Contractor shall--

(1) check all drawings furnished immediately upon receipt;

(2) Compare all drawings and verify the figures before laying out the work;

(3) Promptly notify the Contracting Officer of any discrepancies; and

(4) Be responsible for any errors which might have been avoided by complying with this paragraph (b).

(c) Large scale drawings shall, in general, govern small scale drawings. Figures marked on drawings shall, in general, be followed in preference to scale measurements.

(d) Omissions from the drawings or specifications or the misdescription of details of work which are manifestly necessary to carry out the intent of the drawings and specifications, or which are customarily performed, shall not relieve the Contractor from performing such omitted or misdescribed details of the work, but shall be performed as if fully and correctly set forth and described in the drawings and specifications.

(e) The work shall conform to the specifications and the contract drawings identified in the index of drawings attached at the end of the Special Clauses.

SC-19. THROUGH SC-21. DELETED.

SC-22. EPA ENERGY STAR: The Government requires that certain equipment be Energy Star compliant. Initially, the sole Energy Star requirement shall be the self certification by the bidder that the specified equipment is Energy Star compliant. Within 3 months of the availability of an EPA sanctioned test for Energy Star compliance, the Contractor shall submit all equipment upgrades and additions for testing and provide proof of compliance to the Government upon completion of testing. Testing shall be at the Contractor's expense.

SC-23. YEAR 2000 COMPLIANCE:

a. In accordance with FAR 39.106, the Contractor shall ensure that with respect to any design, construction, goods, or services under this contract as well as any subsequent task/delivery orders issued under this contract (if applicable), all information technology contained therein shall be Year 2000 compliant. Specifically:

b. The Contractor shall:

(1) Perform, maintain, and provide an inventory of all major components to include structures, equipment, items, parts, and furnishings under this contract and each task/delivery order which may be affected by the Year 2000 compliance requirement.

(2) Indicate whether each component is currently Year 2000 compliant or requires an upgrade for compliance prior to Government acceptance.

SC-24. RECOVERED MATERIALS: The Corps of Engineers encourages all bidders to utilize recovered materials to the maximum extent practicable. The attached APPENDIX R contains procurement guidelines for products containing recovered materials.

APPENDIX R

PART 247 - COMPREHENSIVE PROCUREMENT GUIDELINE FOR PRODUCTS CONTAINING RECOVERED MATERIALS

40 CFR Ch. 1 (7-7-96 Edition)

Subpart B-Item Designations

§ 247.10 Paper and paper products.

Paper and paper products, excluding building and construction paper grades.

§ 247.11 Vehicular products.

(a) Lubricating oils containing refined oil, including engine lubricating oils, hydraulic fluids, and gear oils, excluding marine and aviation oils.
(b) Tires. excluding airplane tire
(e) Reclaimed engine coolants, excluding coolants used in non-vehicular applications.

247.12 Construction products.

(a) Building insulation product including the following items:
(1) Loose-fill insulation, including but not limited to cellulose fiber, mineral fibers (fiberglass and rock vermiculite, and perlite;
(2) Blanket and batt insulation, including but not limited to mineral fibers (fiberglass and rock wool);
(3) Board (sheathing, roof decking wall panel) insulation, including but not limited to structural fiber and laminated paperboard products perlite composite board, polyurethane, polyisocyanurate, polystyrene, phenolics, and composites; and
(4) Spray-in-place insulation, including but not limited to foam-in polyurethane and polyisocyanurate and spray-on cellulose.
(b) Structural fiberboard and laminated paperboard products for applications other than building insulation, including building board, sheathing shingle backer, sound deadening roof insulating board, insulating board, acoustical and non-acoustical ceiling tile, acoustical and non-acoustical lay-in panels underlayments, and roof overlay (coverboard).
(c) Cement and concrete, including concrete products such as pipe block, containing coal fly as ground granulated blast furnace (GGBF) slag.
(d) Carpet made of polyester fiber use in low- and medium-wear applications.
(e) Floor tiles and patio block containing recovered rubber or plastic.

§247.13 Transportation products.

Traffic barricades and traffic used in controlling or restricting vehicular traffic.

§ 247.14 Park and recreation products

Playground surfaces and running tracks containing recovered rubber or plastic.

247.15 Landscaping products.

(a) Hydraulic mulch products containing recovered paper or recovered wood used for hydroseeding and over-spray for straw mulch in landscaping, erosion control, and soil reclamation.

(b) Compost made from yard trimmings, leaves, and/or grass clippings for use in landscaping, seeding of or other plants on roadsides and embankments, as a nutritious under trees and shrubs, and in erosion control and soil reclamation.

§ 247.16 Non-paper office product.

(a) Office recycling containers and office waste receptacles.
(b) Plastic desktop accessories.
(c) Toner cartridges.
(d) Binders.
(e) Plastic trash bags.

DESIGN AUTHENTICATION

ATHLETIC COMPLEX
NORTH FORT LEWIS
PN 41845

Signatures affixed below indicate the drawings and specifications included in this solicitation were prepared, reviewed and certified in accordance with Department of Army Engineer Regulation ER 1110-345-100, DESIGN POLICY FOR MILITARY CONSTRUCTION.

FOR Dean M. Schmidt
Chief, Tech. Eng. & Review Section,
Construction Branch

James W. Clark, P.E.
Project Manager

FOR Rick L. Moshier, P.E.
Chief, Design Branch

Phillip M. O'Dell, P.E.
Chief, Engineering & Construction Division

This project was designed by the U.S. Army Corps of Engineers, Seattle District. The initials and/or signatures and registration designations of individuals appearing on these project documents are within the scope of their employment as required by ER 1110-1-8152, ENGINEERING AND DESIGN PROFESSIONAL REGISTRATION.

INDEX OF DRAWINGS

FILE NUMBER	SHEET NUMBER	PLATE NUMBER	TITLE	REVISION NUMBER	DATE
			ATHLETIC TRAINING COMPLEX		
			North Fort Lewis,WA		
			PN MCA 41845		
			GENERAL		
22s/740-28-01	1	GO.1	TITLE AND AREA MAPS		99 SEP 10
	2	GO.2	DRAWING INDEX		99 SEP 10
			GEOTECHNICAL		
			GENERAL		
	3	GT1.1	EXPLORATION LOGS		99 SEP 10
	4	GT1.2	EXPLORATION LOGS		99 SEP 10
	5	GT1.3	LOCATIONS OF EXPLORATIONS		99 SEP 10
			CIVIL		
			GENERAL		
	6	C1.1	LEGEND AND ABBREVIATIONS		99 SEP 10
	7	C1.2	GENERAL SITE PLAN		99 SEP 10
	8	C1.3	DEMOLITION PLAN		99 SEP 10
	9	C1.4	SITE PLAN		99 SEP 10
	10	C1.5	GRADING PLAN		99 SEP 10
	11	C1.6	UTILITY PLAN		99 SEP 10
	12	C1.7	PAVEMENT STRIPING PLAN		99 SEP 10
	13	C1.8	UTILITY DETAILS I		99 SEP 10
	14	C1.9	UTILITY DETAILS II		99 SEP 10
	15	C1.10	SANITARY SEWER PROFILE		99 SEP 10
	16	C1.11	STORM SEWER PROFILE		99 SEP 10
	17	C1.12	SECTIONS		99 SEP 10
	18	C1.13	MISCELLANEOUS DETAILS		99 SEP 10
			LANDSCAPE		
			GENERAL		
	19	L1.1	LANDSCAPE PLAN		99 SEP 10
	20	L1.2	ENLARGED ENTRANCE PLANS, PLANT LIST AND LEGEND		99 SEP 10
	21	L1.3	IRRIGATION PLAN		99 SEP 10
	22	L1.4	LANDSCAPE DETAILS I		99 SEP 10
	23	L1.5	IRRIGATION DETAILS		99 SEP 10
	24	L1.6	LANDSCAPE DETAILS II		99 SEP 10
			ARCHITECTURAL		
	25	AO.1	ABBREVIATIONS AND GENERAL NOTES		99 SEP 10
			PLANS		
	26	A1.1	OVERALL FLOOR PLAN		99 SEP 10
	27	A1.2	FLOOR PLAN I		99 SEP 10
22s/740-28-01	28	A1.3	FLOOR PLAN II		99 SEP 10
	29	A1.4	FLOOR PLAN III		99 SEP 10
	30	A1.5	ROOF PLAN		99 SEP 10
	31	A1.6	DOOR & WINDOW SCHEDULES		99 SEP 10

FILE NUMBER	SHEET NUMBER	PLATE NUMBER	TITLE	REVISION NUMBER	DATE
	32	A1.7	ROOM FINISH SCHEDULE		99 SEP 10
			ELEVATIONS		
	33	A2.1	EXTERIOR ELEVATIONS I		99 SEP 10
	34	A2.2	EXTERIOR ELEVATIONS II		99 SEP 10
	35	A2.3	BUILDING SECTIONS		99 SEP 10
	36	A2.4	WALL SECTIONS I		99 SEP 10
	37	A2.5	WALL SECTIONS II		99 SEP 10
			PLANS		
	38	A3.1	ENLARGED PLANS I		99 SEP 10
	39	A3.2	ENLARGED PLANS II		99 SEP 10
			CEILING		
	40	A4.1	REFLECTED CEILING PLAN I		99 SEP 10
	41	A4.2	REFLECTED CEILING PLAN II		99 SEP 10
			DETAILS		
	42	A5.1	EXTERIOR DETAILS I		99 SEP 10
	43	A5.2	EXTERIOR DETAILS II		99 SEP 10
	44	A5.3	EXTERIOR DETAILS III		99 SEP 10
	45	A5.4	INTERIOR DETAILS I		99 SEP 10
	46	A5.5	INTERIOR DETAILS II		99 SEP 10
	47	A5.6	INTERIOR DETAILS III		99 SEP 10
	48	A5.7	INTERIOR SIGNAGE		
			STRUCTURAL		
			GENERAL		
	49	S1.1	GENERAL NOTES		99 SEP 10
	50	S1.2	STANDARD DETAILS I		99 SEP 10
	51	S1.3	STANDARD DETAILS II		99 SEP 10
	52	S1.4	STANDARD DETAILS III		99 SEP 10
	53	S1.5	FOUNDATION PLAN		99 SEP 10
	54	S1.6	SLAB ON GRADE PLAN		99 SEP 10
	55	S1.7	MEZZANINE STRUCTURE		99 SEP 10
	56	S1.8	WALL TOP SUPPORT PLAN		99 SEP 10
	57	S1.9	SECTIONS AND DETAILS I		99 SEP 10
	58	S1.10	SECTIONS AND DETAILS II		99 SEP 10
			MECHANICAL		
			GENERAL		
	59	M1.1	ABBREVIATIONS & GENERAL NOTES		99 SEP 10
	60	M1.2	MECHANICAL SCHEDULES I		99 SEP 10
	61	M1.3	MECHANICAL SCHEDULES II		99 SEP 10
	62	M1.4	MECHANICAL SCHEDULES III		99 SEP 10
22s/740-28-01	63	M1.5	SEISMIC DETAILS		99 SEP 10
	64	M2.1	HVAC GENERAL FLOOR PLAN		99 SEP 10
	65	M2.2	HVAC FLOOR PLAN I		99 SEP 10
	66	M2.3	HVAC FLOOR PLAN II		99 SEP 10
	67	M2.4	HVAC FLOOR PLAN III		99 SEP 10
	68	M2.5	ENLARGED MECHANICAL PLANS I		99 SEP 10
	69	M2.6	ENLARGED MECHANICAL PLANS II		99 SEP 10
	70	M2.7	ENLARGED MECHANICAL PLANS AND SECTIONS		99 SEP 10

FILE NUMBER	SHEET NUMBER	PLATE NUMBER	TITLE	REVISION NUMBER	DATE
			HVAC DETAILS		
	71	M3.1	HVAC DETAILS I		99 SEP 10
	72	M3.2	HVAC DETAILS II		99 SEP 10
			PLUMBING		
	73	M4.1	FOUNDATION PLUMBING PLAN		99 SEP 10
	74	M4.2	PLUMBING PLAN		99 SEP 10
	75	M4.3	ENLARGED PLUMBING PLANS		99 SEP 10
			PLUMBING DETAILS		
	76	M5.1	PLUMBING DETAILS		99 SEP 10
			FIRE PROTECTION		
	77	M6.1	FIRE PROTECTION PLAN		99 SEP 10
	78	M6.2	FIRE PROTECTION DETAILS		99 SEP 10
			CONTROLS		
	79	M7.1	CONTROLS - LEGEND		99 SEP 10
	80	M7.2	DDC - HEATING WATER		99 SEP 10
	81	M7.3	DDC - HV-1A HV-1B		99 SEP 10
	82	M7.4	DDC - HV-2		99 SEP 10
	83	M7.5	DDC - HV-3		99 SEP 10
	84	M7.6	DDC - MISCELLANEOUS CONTROLS I		99 SEP 10
	85	M7.7	DDC - MISCELLANEOUS CONTROLS II		99 SEP 10
			ELECTRICAL		
			GENERAL		
	86	E1.1	LEGEND		99 SEP 10
			SITE		
	87	E2.1	SITE PLAN I		99 SEP 10
	88	E2.2	SITE PLAN II		99 SEP 10
	89	E2.3	SITE PLAN III		99 SEP 10
	90	E2.4	SITE PLAN IV		99 SEP 10
			PLANS		
	91	E3.1	LIGHTING PLAN I		99 SEP 10
	92	E3.2	LIGHTING PLAN II		99 SEP 10
	93	E3.3	LIGHTING PLAN III		99 SEP 10
	94	E3.4	POWER PLAN I		99 SEP 10
	95	E3.5	POWER PLAN II		99 SEP 10
	96	E3.6	POWER PLAN III		99 SEP 10
22s/740-28-01	97	E3.7	ENLARGED POWER PLANS		99 SEP 10
	98	E3.9	AUXILARY SYSTEMS PLAN		99 SEP 10
			DETAILS		
	99	E4.1	ONE-LINE DIAGRAM		99 SEP 10
	100	E4.2	RISER DIAGRAMS		99 SEP 10
	101	E4.3	LIGHTING DETAILS I		99 SEP 10
	102	E4.4	LIGHTING DETAILS II		99 SEP 10
	103	E4.5	LIGHTING DETAILS III		99 SEP 10
	104	E4.6	COMMUNICATIONS DETAILS		99 SEP 10
	105	E4.7	MISCELLANEOUS DETAILS I		99SEP10
	106	E4.8	MISCELLANEOUS DETAILS II		99 SEP 10
	107	E4.9	EXTERIOR DETAILS I		99 SEP 10
	108	E4.10	EXTERIOR DETAILS II		99 SEP 10
	109	E4.11	EXTERIOR DETAILS III		99 SEP 10

FILE NUMBER	SHEET NUMBER	PLATE NUMBER	TITLE	REVISION NUMBER	DATE
	110	E4.12	EXTERIOR DETAILS IV		99 SEP 10
	111	E4.13	PANEL SCHEDULES I		99 SEP 10
	112	E4.14	PANEL SCHEDULES II		99 SEP 10
	113	E4.15	PANEL SCHEDULES III		99 SEP 10

STANDARD DETAILS BOUND IN THE SPECIFICATIONS

DRAWING NUMBER	SHEET NUMBER	TITLE	DATE

SECTION 01501 - CONSTRUCTION FACILITIES AND TEMPORARY CONTROLS

1 & 2	U.S. Air Force (U.S. Army) Project Construction Sign	84JUN20
1	Hard Hat Sign	10SEP90

MODIFICATION TO DRAWINGS

Drawing L1.2: Plant List: Add "7 , Tsuga Canadensis, Canada Hemlock TC, 2-2.4M height, symmetrical".

Drawing L1.2: Plant List, Courtyard Planting: Add "60 Hydrangea anomala petiolaris, Climbing Hydrangea, HP, #1 Container".

Plate L1.1: Add callout to rectangular area (2.5M x 10.25M, approx.) between parking lot on South Side of Athletic Complex and the concrete pad in front of the mechanical room doors to be "Grass Pavers, see PL C1.4 and Detail 7, PL L1.4".

Plate L1.2: Enlarged Main Entrance Plan And Enlarged Courtyard Plan: Add Note 4 "Alternate concrete paver size of 112.5 mm x 225 mm (for rectangular shapes) and 225 mm x 225 mm (for square shapes) may be proposed at Contractor's option as long as outer limit of pavers, patterning and layout integrity is retained. Dimensions indicated shall be revised accordingly to fit outer limits of concrete pavers. Current design was based on using Unilock Paver Series 3000; New York; (800) 864-5625".

Plate L1.2: Add to Note 1 "Paver colors to match brick (red brown for primary brick and dark brown for accent brick) shall be selected from standard colors available from the manufacturer. Final color selections shall be approved by the Contracting Officer."

Plate L1.2: Enlarged Main Entrance Plan: Add callout to square shape located to left of southeast column (FG6) "Trash Receptacle, see spec., two total required this project."

Plate L1.6: Delete Main Entrance Paver Pattern Detail 9.
Drawing A1.3: Add a phrase "storage shelving" to Room 106 on the south and west wall.

Drawing A1.5: Revise note on Skylight Plan to read: Sizes are suggested only. It shall be the responsibility of the Contractor to furnish complete design for the Entrance Lobby Area framing, including primary and secondary framing connections, base plates and anchor bolts. Base plates and anchor bolts shall be below finish floor and tile. Contractor shall coordinate with skylight manufacturer as necessary to facilitate connections for translucent panels as well as doors and windows, etc. Reference Spec Section 13120.

Drawing A1.5: Revise call out from "150 X 350 steel tubing @ 250 O.C. max" to "150 X 350 @ 3050 O.C. max."

Drawing A1.6: Revise door #112B sill designation from 9/A1.7 to Sim 9/A5.6.

Drawing A1.6: Revise louver L2 dimension from 2200 mm to 1500 mm.

Plate A1.6: Make window W3 Mullion detail to be similar to detail 10/A5.2.

Drawing A1.7: Revise Room 103 west wall finish from "high impact panel" to "acoustical wall panel".

Drawing A1.7: Add note to remarks column for Corridor #110: "Provide corner guards to stud walls".

Drawing A1.7: Revise Color Reference CT-1 from "Terra Paver" style to "Stone Creek" style and "R104 Conchos" color to SC23 Coffee" color.

Drawing A1.7: Revise color reference CT-2 from "Crystal Frame" style to "Stone Creek" style and "SC2122 Chip Dust" color.

Plate A1.7: Finish Codes: Note: Add "Tile size shall be per specification”.

Plate A1.7: Room Finish Schedule "Base” Column: Change CT-6 to CT-3.

Plate A1.7: Room Finish Schedule, Room 102: "Change QT to CT in floor material column and in Base column change RB-1 to CT-3."

Plate A1.7: Room Finish Schedule, Room 110: Add ACT/GWB, FF/P and ACT-1/P-5 to ceiling column.

Plate A1.7: Room Finish Schedule, Room 110, Southwall: Delete CMU from material and CT-3 from color.

Plate A1.7: Room Finish Schedule, Room 111: Delete GWB and Paint Finish and add "Full height CT Finish" to "remarks" column.

Plate A1.7: Room Finish Schedule, Rooms 111, 115, 116, 117, & 118: Add to "Remarks" column "use backboard for CT on cement, all walls."

Plate A1.7: Room Finish Schedule, Room 113: Delete ACT/GWB, P, and ACT-1/P-5 from ceiling column.

Plate A1.7: Room Finish Schedule, Rooms 116 & 117: Add "Full height CT walls" to “remarks” column.

Plate A1.7: Room Finish Schedule, Rooms 116 and 117: Add to "Remarks", "CT shall be installed on cement board with suspended ceiling system."

Plate A1.7: Room Finish Schedule, Rooms 116 and 117: Add to "Remarks", "Drop ceiling shall be suppended similar to detail 3 on A3.1 and extra flush with top of lockers."

Plate A1.7: Room Finish Schedule, Rooms, 119, 120 and 121: Add GWB/ACT, P/FF, and P-5/ACT-1 to ceiling column.

Plate A2.1, Detail 1: In the callout "Pre-cast concrete sign" replace the words "Pre-cast conc. sign" with words: "Steel plate as specified, attached with stainless steel screws or epoxy."

Plate A2.2, Detail 1: In the callout "Pre-cast concrete sign" replace the words "Pre-cast conc. sign" with words: Steel plate as specified, attached with stainless steel screws or epoxy."

Plate A2.4: Wall Section I: Add ACT ceiling for flat area to 1 wall section, and add GWB to 2 wall section at Wt. Rm. Ceiling.

Plate A3.2: Detail 1/A1.4: Revise arrows to show "Depressed slab" in shower area to agree with S1.6.

Plate A4.2: Men's Locker Room 116: Delete gypsum board ceiling from shower area only.

Plate A5.2: Make all P.T. Wood blocking to be 38 mm x 148 mm.

Plate A5.5: Interior Elevations, Shower: Delete "Depressed CT Gutter".

Drawing A5.5: Add note to detail 5 and 7: Treated wood applies only to where wood is in contact with concrete surface.

Drawing A5.5: Detail 6: Revise trim board dimension from 200 mm X 400 mm to 50 mm X 150 mm.

Plate S1.1: In "METAL BUILDING SYSTEM", in second paragraph, replace the last line with the following: ". . . to H/300 for building main framing, and to L/600 for secondary members, supporting the brick veneer. These are minimum requirements. If industry standards are more restrictive, the stricter requirements shall govern."

Plate S1.1: Add the following note: "ROOF DECKING" and "FLOOR DECKING" paragraphs. "NOTE:: Screws may be used per manufacturer's recommendations as an alternative to welding, provided test results are submitted showing adequate shear, pull-out, and pull-over capacities."

Drawing S1.6: Revise Note 1 to include the depth of capillary gravel bedding of 6 inches.

Drawing M1.2: Delete schedule "SAUNA HEATER ("BOILER") SCHEDULE".

Drawing M2.3: Carbon dioxide sensor is shown at gridline 5-E. The location for 10 occupancy sensors called out on M7.3 shall be: one each where gridlines 2 and 8 cross over gridlines A, B, C, D & E.

Drawing M2.7: Delete B-2 and associated piping from details where shown.

Drawing M4.3: Delete callouts "sauna piping, fittings, & accessories …." And "Terminate Steam Distribution piping ……..."

Plate M6.2: Detail E: There is no pre-action system included in this project. Delete the callout "continued to pre-action riser" and delete the short portion of piping leading to the pre-action riser.

Drawing M7.2: Delete boiler sequence of operation shown and replace with following: "The DDC system shall accept a signal from a sunshielded outside-air temperature sensing element and transmitter located as approved by the Contracting Officer. The DDC system shall start and stop distribution pumps and boilers at the outside-air temperatures shown. The DDC system shall reset the hydronic-heating supply temperature setpoint in a linear schedule based on the outside-air temperature as shown. The DDC system shall modulate the 3-way control valve to divert water under 120F away from the boiler. The boiler packaged controls shall maintain the maximum boiler setpoint indicated on the reset schedule, within the hydronic-heating circuit that is recirculated using the boiler recirc pump (CP-4). Additional boiler combustion controls are in the boiler specifications."

Plate E2.1: In callouts "Concrete Encased Ductbank", revise 2800 pair and 3200 pair telephone cables from No. 24 AWG to No. 26 AWG." To "notes" add Note 12: "Pairs per cable may be adjusted as long as total number of pairs is 6000."

Plate E2.1: Replace Note 3 with the following: "Replace in-place existing telephone manhole. Set with lid toward building. Hot splice existing 1800 pair conductors to new pairs. Leave unused pairs in splice closures. Route new telephone cables back to RSU, see plates E2.2 and E2.3. Take ductbank across C Street using existing sleeves installed by others."

Plate E3.1: Door lights are connected to circuit LP4-24. Fixture Type: WM1. Modify note 1: Add "Controls for lighting located at issue desk".

Plate E3.2: Lighting circuit for lights in Rooms 101, 123, and 122 should be LP 1-6. Homerun is shown in the wrong place. Add Note 1: "Route conduit & conductors for outdoor illuminated announcement board".

Plate E3.3: Exterior door lights are connected to circuit LP 4-24. Fixture type called out as WS2 but should be WM1. In the corridor elevation, change WF1 to WF2. Change matchline plate callouts: 3.4 is 3.1 and 3.5 is 3.2.

Plate E3.4: Exterior outlets should be GFI, WP.

Plate E3.5: Receptacles in lobby along gym and into courtyard are on circuit LP 1-20. Washer is on circuit M1-35. Dryer is on circuit M1-31, 33. Add to note 6: Circuit is LP 1-6, see lighting plan E 3.2 Recept in Room 120 on west wall are on LP 3-24, 26. Recept's to be connected alternately. TV recept in Room 120 is circuit L3-20. Recepts in Room 107 to be connected alternately. Clock outlet in Room 119 is on LP 2-10. Recept's outside on west wall are on LP 2-21 and shall be GF1 and in WP enclosures. Callout P1-2, 4, 6, 8 should be LP 1-2, 4, 6, 8. Callout LP 3-1, 3, 5 should be LP 3-1, 3.

Plate E3.6: Clock outlet in Room 116 shows LP 2-25. Change to LP 2-15.

Plate E3.7: In enlarged Mech/Elec plan, panelboards are missing in Elec Room (level was left off in error). Circuit M1-14, 16, 18 supplies F-1.EF-4 is connected to M1-37. Add note 2: "Provide duplex receptacle in mezzanine in vicinity of Mech equipment. Coordinate location with Mech contractor. Connect receptacles to M2-27. Add to Note 1: Connect lights to M2-25. Fixture shall be similar to WF3, except lamp shall be incandescent and fixture shall have built-in switch.

Plate E4.1: Change callout for feeder #3 to 4 #350 Kcmil in 1-103 mmC, 1-103 mmC spare. Add Note 6: "Install TVSS at MDP. Provide 60A, 3P breaker in MDP. Mount TVSS according to manufacturer's instructions. Provide conduit and conductors necessary and keep length as short as possible."

Plate E4.3: Change WF2 to 2-32W, T8 lamps. Change PF1 to 4-32W, T8 lamps (PF1 is 8 ft long). Replace WF1 with Type 220B; add fixtures RF2 Type 25B1, SF2, Type 232; WF3; Type 124A except modified for 13WDIT compact fluorescent lamp; shown in sheets 15, 31, and 38 of Detail 40-06-04 and Sheet 5, NPS DET, EE-01.

Plate E4.4 : Change WF1 to WM1 to match title. Change PM1 to PM2 to match plan callout for lamp size. Add note: "PM 1 is similar but with 1000 W MH lamp". Add note to mounting detail: "Bottom of fixture shall be 9M AFF".

Plate E4.5: Add to Sidewalk Pole detail: Pole height is 3.1M. Fixture PS2 is similar to W53. See detail this sheet. Add to Parking Area Pole detail: Pole height is 10M.

Plate E4:6: To Detail 7 add the following as Note 2: "Tray shall be galvanized steel with no less than 300 mm radius."

Plate E4.7: Delete sheet - No IDS System.

Plate E4.13: Panels L1 & L2 same as LP1 & LP2 respectively. Change L1-20 from spare to lobby & courtyard recept. Add 3 spare 20A, 1P breakers to L2.

Plate E4.14: Panels L3 & L4 are same as LP3 & LP4, respectively. L4 change 30A breaker to 50A. Add 3 spare 20A, 1 pole breakers.

Plate E4.15: Change M2-25 from SPARE to MEZZANINE LIGHTS; change M2-27 from SPARE to MEZZANINE RECEPT; change M2-8 from 20A.1P to 40A, 3P.

The following drawings shall be modified as described below and shown on sketches 1-7, attached at the end of this Specification Section.

Drawing E3.1: Add to Note 1 “See specification Section 16415 for controls. Add to Note 2 “Provide 250W quartz lamp in fixtures with E. Quartz lamps shall not be part of lighting control system. Emergency wiring not shown.

Drawing E3.2: Modify as indicated in Sketch #1.

Drawing E3.3: Modify as indicated in Sketch #2.

Drawing E3.4: Add Note 5 “Controls for motorized curtain shall be installed per manufacturer’s instructions. Remote control shall be located at the Issue Desk.

Drawing E3.8: Modify gymnasium speaker layout as indicated in Sketch #3. Add Note 15 “Provide a door sensor on doors 103C, 103D, and 110 that is interlocked with the panic hardware to indicate at the Issue Desk that the door has been opened. Add speaker detail as indicated in Sketch #4.

Drawing E4.1: In the MDP One-Line, delete B-2; add an 80A, 2 pole breaker with a feeder labeled as #7 for the Emergency Lighting System; for M2 change feeder to #9. Add #9 to Feeder Schedule: 4 #4/0, 1 #6Gnd, 63mmC.

Drawing E4.3: Modify detail PF1 as indicated in Sketch #5 and detail WF2 as indicated in Sketch #6.

Drawing E4.6: Modify PA System Detail as indicated in Sketch #7.

Drawing E4.15: Modify Panel M2 as follows: change Main Breaker to 175A trip, add 60A, 3 pole circuit breaker at M2-26,28,30 for Sauna in Men's Locker Rm and add 60A, 3 pole circuit breaker at M2-32,34,36 for sauna in Women's Locker Rm. Conductors for each circuit will be 3 #4, 1 # 10Gnd in 35mmC.

END OF SECTION

General Decision Number **WA990002**
Superseded General Decision No. WA980002

State: Washington
Construction Type:
BUILDING

County(ies):

CHELAN	KITSAP	PIERCE
CLALLAM	KITTITAS	SNOHOMISH
GRAYS HARBOR	LEWIS	THURSTON
JEFFERSON	MASON	
KING	PACIFIC	

BUILDING CONSTRUCTION PROJECTS (does not include residential construction consisting of single family homes and apartments up to and including 4 stories)

Modification Number	Publication Date
0	03/12/1999
1	04/09/1999
2	05/21/1999
3	06/04/1999
4	06/25/1999
5	07/02/1999
6	07/09/1999
7	07/30/1999
8	09/03/1999
9	09/24/1999
10	10/01/1999
11	10/08/1999
12	10/22/1999
13	11/05/1999

COUNTY(ies):

CHELAN	KITSAP	PIERCE
CLALLAM	KITTITAS	SNOHOMISH
GRAYS HARBOR	LEWIS	THURSTON
JEFFERSON	MASON	
KING	PACIFIC	

ASBE0007A 06/01/1999

	Rates	Fringes
ASBESTOS WORKERS/INSULATORS: (Includes application of all insulating materials, protective coverings, coating and finishes to all types of mechanical systems)	27.61	5.65

BOIL0242B 10/01/1999

	Rates	Fringes
CHELAN AND KITTITAS COUNTIES		
BOILERMAKERS	24.32	9.81

BOIL0502B 10/01/1996

	Rates	Fringes
CLALLAM, GRAYS HARBOR, JEFFERSON, KING, KITSAP, LEWIS, MASON, PACIFIC, PIERCE, SNOHOMISH AND THURSTON COUNTIES		
BOILERMAKERS	24.32	9.01

BRWA0001A 05/01/1999

	Rates	Fringes
CLALLAM, GRAYS HARBOR, JEFFERSON, KING, KITSAP, LEWIS, MASON, PACIFIC (NORTHERN HALF), PIERCE, SNOHOMISH AND THURSTON COUNTIES		
BRICKLAYERS	26.35	6.42

BRWA0001F 06/01/1999

	Rates	Fringes
PACIFIC COUNTY (SOUTHERN PART)		
BRICKLAYERS	24.94	8.03
MARBLE MASONS	25.94	8.03

BRWA0001G 05/01/1997

	Rates	Fringes
PACIFIC (SOUTHERN PORTION) COUNTY		
TILE SETTER AND TERRAZZO WORKERS	22.18	5.82
TILE AND TERRAZZO FINISHERS	16.77	4.27

BRWA0001H 06/01/1999

	Rates	Fringes
CLALLAM, GRAYS HARBOR, JEFFERSON, KING, KITSAP,LEWIS, MASON, PACIFIC (NORTHERN HALF), PIERCE, THURSTON AND SNOHOMISH COUNTIES		
TILE AND TERRAZZO WORKERS	24.92	6.06
TILE AND TERRAZZO FINISHERS	19.55	5.56

BRWA0003A 06/01/1999

	Rates	Fringes
CHELAN AND KITTITAS COUNTIES		
BRICKLAYERS	22.36	7.06

BRWA0003E 04/01/1995

	Rates	Fringes

CLELAN AND KITTITAS

TERRAZZO WORKERS	17.50	5.38
TILE LAYER	17.00	5.38
TILE AND TERRAZZO FINISHERS	13.70	5.38

CARP0770E 06/01/1999

	Rates	Fringes
WESTERN WASHINGTON: CLALLAM, GRAYS HARBOR, JEFFERSON, KING, KITSAP, LEWIS, MASON, PACIFIC (NORTH), PIERCE, SNOHOMISH AND THURSTON COUNTIES		
CARPENTERS AND DRYWALL APPLICATORS	25.50	6.37
CARPENTERS ON CREOSOTE MATERIAL	25.60	6.37
INSULATION APPLICATORS	22.40	6.37
SAWFILERS, STATIONARY POWER SAW OPERATORS, FLOOR FINISHER, FLOOR LAYER, SHINGLER, FLOOR SANDER OPERATORS OF OTHER STATIONARY WOOD WORKING TOOLS	25.63	6.37
MILLWRIGHT AND MACHINE ERECTORS	26.50	6.37
ACOUSTICAL WOKRERS	25.66	6.37
PILEDRIVER, DRIVING, PULLING, CUTTING, PLACING COLLARS, SETTING, WELDING OR CRESOTE TREATED MATERIAL, ALL PILING	25.70	6.37
PILDRIVER, BRIDGE DOCK & WHARF CARPENTERS	25.50	6.37
DIVERS	62.97	6.37
DIVERS TENDER	28.01	6.37

(HOURLY ZONE PAY APPLICABLE TO ALL CLASSIFICATIONS EXCEPT MILLWRIGHT AND PILEDRIVER)

Hourly Zone Pay shall be paid on jobs located outside of the free zone computed from the city center of the following listed cities:

Seattle	Olympia	Bellingham
Auburn	Bremerton	Anacortes
Renton	Shelton	Yakima
Aberdeen-Hoquiam	Tacoma	Wenatchee
Ellensburg	Everett	Port Angeles
Centralia	Mount Vernon	Sunnyside
Chelan	Pt. Townsend	

Zone Pay	
0 -25 radius miles	Free
25-35 radius miles	$1.00/hour
35-45 radius miles	$1.15/hour
45-55 radius miles	$1.35/hour
Over 55 radius miles	$1.55/hour

(HOURLY ZONE PAY - MILLWRIGHTS AND PILEDRIVERS ONLY)

Hour Zone Pay shall be computed from Seattle Union

Hall, Tacoma City center, and Everett City center

Zone Pay	
0 -25 radius miles	Free
25-45 radius miles	$ .70/hour
Over 45 radius miles	$1.50/hour

Millwrights and Piledrivers who reside in Aberdeen, Bellingham, Port Angeles, Mount Vernon, Olympia, Wenatchee, or Yakima Local Union jurisdication areas, working on jobs in their respective area, shall have their Zone Pay measured from their respective city center

CENTRAL WASHINGTON: CHELAN AND KITTITAS COUNTIES

CARPENTERS AND DRYWALL APPLICATORS	20.47	6.37
CARPENTERS ON CREOSOTED MATERIALS	20.57	6.37
INSULATION APPLICATORS	20.47	6.37
SAWFILER, STATIONARY POWER SAW OPERATORS, FLOOR FINISHER, FLOOR LAYER, SHINGLERS, FLOOR SANDER OPERATOR AND OPERATORS OF OTHER STATIONARY WOOD WORKING TOOLS	20.60	6.37
MILLWRIGHTS AND MACHINE ERECTORS	26.50	6.37
ACCOUSTICAL WORKERS	20.73	6.37
PILDRIVER, DRIVING, PULLING, CUTTING, PLACING COLLARS, SETTING, WELDING, OR CREOSOTE TREATED MATERIAL, ALL PILING	25.70	6.37
PILEDRIVER, BRIDGE DOCK & WHARF CARPENTERS	25.50	6.37
DIVERS	62.97	6.37
DIVERS TENDER	28.01	6.37

CARP9003A 06/01/1998

	Rates	Fringes

PACIFIC COUNTY (South of a straight line made by extending the north boundary line of Wahkiakum County west to Willapa Bay to the Pacific Ocean, and thence north through the natural waterway to the Pacific Ocean (this will include the entire peninsula west of Willapa Bay)

SEE ZONE DESCRIPTION FOR CITIES BASE POINTS

ZONE 1:

CARPENTERS	24.27	6.42
DRYWALL, ACOUSTICAL & LATHERS	20.48	6.27
FLOOR LAYERS & FLOOR FINISHERS (the laying of all hardwood floors nailed and mastic set, parquet and wood-type tiles, and block floors, the sanding and finishing of floors, the prepara-		

tion of old and new floors when the materials mentioned above are to be installed; INSULATORS (fiberglass and similar irritating material)	24.42	6.42
MILLWRIGHTS	24.77	6.42
PILEDRIVERS	24.77	6.42
DIVERS	55.03	6.42
DIVERS TENDERS	25.59	6.42

Zone Differential (Add to Zone 1 rates):
Zone 2 - $0.85
Zone 3 - 1.25
Zone 4 - 1.70
Zone 5 - 2.00
Zone 6 - 3.00

BASEPOINTS: GOLDENDALE, LONGVIEW, AND VANCOUVER

ZONE 1: Projects located within 30 miles of the respective city hall of the above mentioned cities
ZONE 2: Projects located more than 30 miles and less than 40 miles of the respective city of the above mentioned cities
ZONE 3: Projects located more than 40 miles and less than 50 miles of the respective city of the above mentioned cities
ZONE 4: Projects located more than 50 miles and less than 60 miles of the respective city of the above mentioned cities.
ZONE 5: Projects located more than 60 miles and less than 70 miles of the respective city of the above mentioned cities

ZONE 6: Projects located more than 70 miles of the respected city of the above mentioned cities

---

* ELEC0046B 05/31/1999

CALLAM, JEFFERSON, KING AND KITSAP COUNTIES	Rates	Fringes
ELECTRICIANS	29.00	7.96+3%
CABLE SPLICERS	31.90	7.96+3%

ELEC0046C 06/14/1999

CALLAM, JEFFERSON, KING, KITSAP COUNTIES	Rates	Fringes
SOUND AND COMMUNICATION TECHNICIAN	18.41	3.55

SCOPE OF WORK

Includes the installation, testing, service and maintenance, of the following systems which utilize the trabsmission and/or

transference of voice, sound vision and digital for commercial, education, security and entertainment purposes for the following: TV monitoring and surveillance, background-foreground music, intercom and telephone interconnect, inventory control systems, microwave transmission, multi-media, multiplex, nurse call system, radio page, school intercom and sound, burglar alarms, fire alarms and life safety systems (hang, terminate devices and panels and to conduct functional and systems tests), and low voltage master clock systems.

WORK EXCLUDED
Raceway systems are not covered (excluding Ladder-Rack for the purpose of the above listed systems). Chases and/or nipples (not to exceed 10 feet) may be installed on open wiring systems.

Energy management systems.

SCADA (Supervisory Control and Data Acquisition) when not intrinsic to the above listed systems (in the scope).

ELEC0076A 07/01/1999

GRAYS HARBOR, LEWIS, MASON, PACIFIC, PIERCE, THURSTON COUNTIES	Rates	Fringes
ELECTRICIANS	25.70	8.47+3%
CABLE SPLICERS	28.27	8.47+3%

ELEC0076D 06/01/1997

GRAYS HARBOR, LEWIS, MASON, PACIFIC, PIERCE AND THURSTON COUNTIES	Rates	Fringes
SOUND AND COMMUNICATIONS TECHNICIAN	16.88	3.79

SCOPE OF WORK

Includes the installation, testing, service and maintenance, of the following systems which utilize the transmission and/or transference of voice, sound, vision and digital for commercial, education, security and entertainment purposes for the following: TV monitoring and surveillance, background-foreground music, intercom and telephone interconnect, inventory control systems, microwave transmission, multi-media, multiplex, nurse call system, radio page, school intercom and sound, burglar alarms and low voltage master clock systems.

WORK EXCLUDED
Raceway systems are not covered (excluding Ladder-Rack for the purpose of the above listed systems). Chases and/or nipples (not to exceed 10 feet) may be installed on open wiring systems.

Energy management systems.

SCADA (Supervisory Control and Data Acquistion) when not intrinsic to the above listed systems (in the scope).

Fire alarm systems when installed in raceways (including wire and cable pulling) shall be performed at the electrician wage rate, when either of the following two (2) conditions apply:

1. The project involves new or major remodel building trades construction.

2. The conductors for the fire alarm system are installed in conduit.

ELEC0112B 06/01/1998

	Rates	Fringes
KITTITAS COUNTY		
ELECTRICIANS	26.20	6.83+3%
CABLE SPLICERS	27.51	6.83+3%

ELEC0112G 03/16/1996

	Rates	Fringes
KITTTITAS COUNTY		
COMMUNICATION & SOUND TECHNICIANS	15.97	3.61

SCOPE OF WORK

Includes the installation, testing, service and maintenance, of the following systems which utilize the transmission and/or transference of voice, sound vision and digital for commercial,

education, security and entertainment purposes for the following: TV monitoring and surveillance, background-foreground music, intercom and telephone interconnect, inventory control systems, microwave transmission, multi-media, multiplex, nurse call system, radio page, school intercom and sound, burglar alarms, and low voltage master clock systems.

WORK EXCLUDED
Raceways systems are not covered (excluding Ladder-Rack for the purpose fo the above listed systems). Chases and/or or nipples (not to exceed 10 feet) may be installed on open wiring systems.

Energy management systems.

SCADA (Supervisory Control and Data Acquisition) when not intrinsic to the above lsited systems (in the scope).

Fire alarm systems when installed in raceways (including wire and cable pulling) shall be performed at the electrician wage rate, when either of the following two (2) conditions apply:

1. The project involves new or major remodel building trades construction.

2. The conductors for the fire alarm system are installed in conduit.

ELEC0191A 06/01/1999

	Rates	Fringes
SNOHOMISH COUNTY		
ELECTRICIANS	25.92	6.83+3%
CABLE SPLICERS	28.51	6.83+3%
CHELAN COUNTY		
ELECTRICIANS	23.89	6.83+3%
CABLE SPLICERS	26.29	6.83+3%

ELEC0191E 05/31/1997

	Rates	Fringes
CHELAN AND SNOHOMISH COUNTIES		
SOUND AND COMMUNICATIONS TECHNICIANS	17.69	2.30+3%

SCOPE OF WORK

Includes the installation testing, service and maintenance, of the following systems which utiolize the transmission and/or transference of voice, sound vision and digital for commercial, education, security and entertainment purposes for the following: TV monitoring and surveillance, backround-foreground music, intercom and telephone interconnect, inventor control systems, microwave transmission, multi-media, multiplex, nurse call system, radio page, school intercom and sound, burglar alarms,

and low voltage master clock systems.

WORK EXCLUDED
Raceway systems are not covered (excluding Ladder-Rack for the purpose of the above listed systems). Chases and/or nipples (not to exceed 10 feet) may be installed on open wiring systems.

Energy management systems.

SCADA (Supervisory Control and Data Acquisition) when not intrinsic to the above listed systems (in the scope).

Fire alarm systems when installed in raceways (including wire and cable pulling) shall be performed at the electrician wage rate, when either of the following two (2) conditions apply:

1. The project involves new or major remodel building trades construction.

2. The conductors for the fire alarm system are installed in conduit.

ELEV0019B 07/01/1999

	Rates	Fringes

CHELAN, CLALLAM, GRAYS HARBOR, JEFFERSON, KING, KITSAP, KITTITAS, LEWIS, MASON, PIERCE, SNOHOMISH AND THURSTON COUNTIES

ELEVATOR MECHANICS	29.895	6.675+a

FOOTNOTE a: Vacation Pay: 8% with 5 or more years of service, 6% for 6 months to 5 years service. Paid Holidays: New Years Day, Memorial Day, Independence Day, Labor Day, Thanksgiving Day and Friday after, and Christmas Day.

ELEV0023B 04/01/1999

	Rates	Fringes

PACIFIC COUNTY

ELEVATOR MECHANIC	30.065	6.675+a

FOOTNOTE a: Vacation Pay: 8% with 5 or more years of service, 6% for 6 months to 5 years service. Paid Holidays: Memorial Day, Independence Day, Labor Day, Thanksgiving Day and Friday after, and Christmas Day, and New Years Day.

ENGI0302B 06/01/1999

	Rates	Fringes

CHELAN (WEST OF THE 120TH MERIDIAN), CLALLAM, GRAYS HARBOR, JEFFERSON, KING, KITSAP, KITTITAS, MASON AND SNOHOMISH COUNTIES

ON PROJECTS DESCRIBED IN FOOTNOTE A BELOW, THE RATE FOR EACH GROUP SHALL BE 95% OF THE BASE RATE PLUS FULL FRINGE BENEFITS. ON ALL OTHER WORK, THE FOLLOWING RATES APPLY.

POWER EQUIPMENT OPERATORS:
Zone 1 (0-25 radius miles):

GROUP 1 AAA	27.51	7.38
GROUP 1AA	27.01	7.38
GROUP 1A	26.51	7.38
GROUP 1	26.01	7.38
GROUP 2	25.57	7.38
GROUP 3	25.21	7.38
GROUP 4	23.11	7.38

Zone Differential (Add to Zone 1 rates):
Zone 2 (26-45 radius miles) - $ .70
Zone 3 (Over 45 radius miles) - $1.00

BASEPOINTS: Aberdeen, Bellingham, Bremerton, Everett, Kent, Mount Vernon, Port Angeles, Port Townsend, Seattle, Shelton, Wenatchee, Yakima

POWER EQUIPMENT OPERATORS CLASSIFICATIONS

GROUP 1AAA - Cranes-over 300 tons, or 300 ft of boom (including jib with attachments)

GROUP 1AA - Cranes 200 to 300 tons, or 250 ft of boom (including

jib with attachments); Tower crane over 175 ft in height, base to boom

GROUP 1A - Cranes, 100 tons thru 199 tons, or 150 ft of boom (including jib with attachments); Crane-overhead, bridge type, 100 tons and over; Tower crane up to 175 ft in height base to boom; Loaders-overhead, 8 yards and over; Shovels, excavator, backhoes-6 yards and over with attachments

GROUP 1 - Cableway; Cranes 45 tons thru 99 tons, under 150 ft of boom (including jib with attachments); Crane-overhead, bridge type, 45 tons thru 99 tons; Derricks on building work; Excavator, shovel, backhoes over 3 yards and under 6 yards; Hard tail end dump articulating off-road equipment 45 yards and over; Loader-overhead 6 yards to, but not including 8 yards; Mucking machine, mole, tunnel, drill and/or shield; Quad 9, HD 41, D-10; Remote control operator on rubber tired earth moving equipment; Rollagon; Scrapers-self propelled 45 yards and over; Slipform pavers; Transporters, all truck or track type

GROUP 2 - Barrier machine (zipper); Batch Plant Operaor-Concrete; Bump Cutter; Cranes, 20 tons thru 44 tons with attachments; Crane-overhead, bridge type-20 tons through 44 tons; Chipper; Concrete Pump-truck mount with boom attachment; Crusher; Deck Engineer/Deck Winches (power); Drilling machine; Excavator, shovel, backhoe-3 yards and under; Finishing Machine, Bidwell, Gamaco and similar equipment; Guardrail punch; Horizontal/directional drill operator; Loaders-overhead under 6 yards; Loaders-plant feed; Locomotives-all; Mechanics-all; Mixers-asphalt plant; Motor patrol graders-finishing; Piledriver

(other than crane mount); Roto-mill,roto-grinder; Screedman, spreader, topside operator-Blaw Knox, Cedar Rapids, Jaeger, Caterpillar, Barbar Green; Scraper-self propelled, hard tail end dump, articulating off-road equipment-under 45 yards; Subgrade trimmer; Tractors, backhoes-over 75 hp; Transfer material service machine-shuttle buggy, blaw knox-roadtec; Truck crane oiler/driver-100 tons and over; Truck Mount portable conveyor; Yo Yo Pay dozer

GROUP 3 - Conveyors; Cranes-thru 19 tons with attachments; A-frame crane over 10 tons; Drill oilers-auger type, truck or crane mount; Dozers-D-9 and under; Forklift-3000 lbs. and over with attachments; Horizontal/directional drill locator; Outside hoists-(elevators and manlifts), air tuggers, strato tower bucket elevators; Hydralifts/boom trucks over 10 tons; Loader-elevating type, belt; Motor patrol grader-nonfinishing; Plant oiler-asphalt, crusher; Pumps-concrete; Roller, plant mix or multi-lift materials; Saws-concrete; Scrpers-concrete and carry-all; Service engineer-equipment; Trenching machines; Truck Crane Oiler/Driver under 100 tons; Tractors, backhoe 75 hp and under

GROUP 4 - Assistant Engineer; Bobcat; Brooms; Compressor; Concrete finish mahine-laser screed; Cranes-A frame-10 tons and under; Elevator and Manlift-permanent or shaft type; Gradechecker, Stakehop; Forklifts under 3000 lbs. with attachments; Hydralifts/boom trucks, 10 tons and under; Oil

distributors, blower distribution and mulch seeding operator; Pavement breaker; Posthole digger, mechanical; Power plant; Pumps, water; Rigger and Bellman; Roller-other than plant mix; Wheel Tractors, farmall type; Shotcrete/gunite equipment operator

FOOTNOTE A- Reduced rates may be paid on the following:

1. Projects involving work on structures such as buildings and bridges whose total value is less than $1.5 million excluding mechanical, electrical, and utility portions of the contract.

2. Projects of less than $1 million where no building is involved. Surfacing and paving included, but utilities excluded.

3. Marine projects (docks, wharfs, etc.) less than $150,000.

HANDLING OF HAZARDOUS WASTE MATERIALS: Personnel in all craft classifications subject to working inside a federally designated hazardous perimeter shall be elgible for compensation in accordance with the following group schedule relative to the level of hazardous waste as outlined in the specific hazardous waste project site safety plan.

H-1 Base wage rate when on a hazardous waste site when not outfitted with protective clothing
H-2 Class "C" Suit - Base wage rate plus $ .25 per hour.
H-3 Class "B" Suit - Base wage rate plus $ .50 per hour.
H-4 Class "A" Suit - Base wage rate plus $ .75 per hour.

ENGI0370I 06/01/1999

	Rates	Fringes
CHELAN (EAST OF THE 120TH MERIDIAN) COUNTY		
ZONE 1:		
POWER EQUIPMENT OPERATORS:		
GROUP 1A	20.01	5.45
GROUP 1	20.56	5.45
GROUP 2	20.88	5.45
GROUP 3	21.49	5.45
GROUP 4	21.65	5.45
GROUP 5	21.81	5.45
GROUP 6	22.09	5.45
GROUP 7	22.36	5.45
GROUP 8	23.46	5.45

ZONE DIFFERENTIAL (Add to Zone 1 rate): Zone 2 - $2.00

Zone 1: Within 45 mile radius of Spokane, Moses Lake, Pasco, Washington; Lewiston, Idaho
Zone 2: Outside 45 mile radius of Spokane, Moses Lake, Pasco, Washington; Lewiston, Idaho

POWER EQUIPMENT OPERATORS CLASSIFICATIONS

GROUP 1A: Boat Operator; Crush Feeder; Oiler; Steam Cleaner

GROUP 1: Bit Grinders; Bolt Threading Machine; Compressors (under 2000 CFM, gas, diesel, or electric power); Deck Hand; Drillers Helper (assist driller in making drill rod connections, service drill engine and air compressor, repair drill rig and drill tools; drive drill support truck to and on the job site, remove drill cuttings from around bore hole and inspect drill rig while in operation); Fireman & Heat Tender; Grade Checker; Hydro-seeder, Mulcher, Nozzleman; Oiler Driver, & Cable Tender, Mucking Machine; Pumpman; Rollers, all types on subgrade, including seal and chip coatings (farm type, Case, John Deere & similar, or Compacting Vibrator), except when pulled by Dozer with operable blade; Welding Machine

GROUP 2: A-frame Truck (single drum); Assistant Refrigeration Plant (under 1000 ton); Assistant Plant Operator, Fireman or Pugmixer (asphalt); Bagley or Stationary Scraper; Belt Finishing Machine; Blower Operator (cement); Cement Hog; Compressor (2000 CFM or over, 2 or more, gas diesel or electric power); Concrete Saw (multiple cut); Distributor Leverman; Ditch Witch or similar; Elevator Hoisting Materials; Dope Pots (power agitated); Fork Lift or Lumber Stacker, hydra-lift & similar; Gin Trucks (pipeline); Hoist, single drum; Loaders (bucket elevators and conveyors); Longitudinal Float; Mixer (portable-concrete); Pavement Breaker, Hydra-Hammer & similar; Power Broom; Railroad Ballast Regulation Operator (self-propelled); Railroad Power Tamper Operator (self-propelled); Railroad Tamper Jack Operator

(self-propelled; Spray Curing Machine (concrete); Spreader Box (self-propelled); Straddle Buggy (Ross & similar on construction job only); Tractor (Farm type R/T with attachment, except Backhoe); Tugger Operator

GROUP 3: A-frame Truck (2 or more drums); Assistant Refrigeration Plant & Chiller Operator (over 1000 ton); Backfillers (Cleveland & similar); Batch Plant & Wet Mix Operator, single unit (concrete); Belt-Crete Conveyors with power pack or similar; Belt Loader (Kocal or similar); Bending Machine; Bob Cat; Boring Machine (earth); Boring Machine (rock under 8" bit) (Quarry Master, Joy or similar); Bump Cutter (Wayne, Saginau or similar); Canal Lining Machine (concrete); Chipper (without crane); Cleaning & Doping Machine (pipeline); Deck Engineer; Elevating Belt-type Loader (Euclid, Barber Green & similar); Elevating Grader-type Loader (Dumor, Adams or similar); Generator Plant Engineers (diesel or electric); Gunnite Combination Mixer & Compressor; Locomotive Engineer; Mixermobile; Mucking Machine; Posthole Auger or Punch; Pump (grout or jet); Soil Stabilizer (P & H or similar); Spreader Machine; Tractor (to D-6 or equivalent) and Traxcavator; Traverse Finish Machine; Turnhead Operator

GROUP 4: Concrete Pumps (squeeze-crete, flow-crete, pump-crete, Whitman & similar); Curb Extruder (asphalt or concrete); Drills (churn, core, calyx or diamond)(Operate drilling machine, drive or transport drill rig to and on job site and weld well casing); Equipment Serviceman, Greaser & Oiler; Hoist (2 or more drums or Tower Hoist); Loaders (overhead & front-end, under 4 yds. R/T); Refrigeration Plant Engineer (under 1000 ton); Rubber-tired

Skidders (R/T with or without attachments); Surface Heater & Planer Machine; Trenching Machines (under 7 ft. depth capacity); Turnhead (with re-screening); Vacuum Drill (reverse circulation drill under 8" bit)

GROUP 5: Backhoe (under 45,000 gw); Backhoe and Hoe Ram (under 3/4 yd.); Carrydeck & boom truck (under 25 tons); Cranes (25 tons & under),all attachments including clamshell, dragline); Derricks & Stifflegs (under 65 tons); Drilling Equipment (8" bit & over) (Robbins, reverse circulation & similar)(operates drill machine, drive or transport drill rig to and on job site and weld well casing); Hoe Ram; Piledriving Engineers; Paving (dual drum); Railroad Track Liner Operator(self-propelled); Refrigeration Plant Engineer (1000 tons & over); Signalman (Whirleys, Highline Hammerheads or similar)

GROUP 6: Asphalt Plant Operator; Automatic Subgrader (Ditches & Trimmers) (Autograde, ABC, R.A. Hansen & similar on grade wire); Backhoe (45,000 gw and over to 110,000 gw); Backhoes & Hoe Ram (3/4 yd. to 3 yd.); Batch Plant (over 4 units); Batch & Wet Mix Operator (multiple units, 2 & incl. 4); Blade Operator (Motor Patrol & Attachments, Athey & Huber); Boom Cats (side); Cableway Controller (dispatcher); Clamshell Operator (under 3 yds.); Compactor (self-propelled with blade); Concrete Pump Boom Truck; Concrete Slip Form Paver; Cranes (over 25 tons including 45 tons), all attachments including clamshell, dragline; Crusher, Grizzle & Screening Plant Operator; Dozer, 834 R/T & similar;

Draglines (under 3 yds.); Drill Doctor; H.D.Mechanic; H.D. Welder; Loader Operator (front-end & overhead, 4 yds. incl. 8 yds.), Multiple Dozer Units with single blade; Paving Machine (asphalt and concrete); Quad-Track or similar equipment; Rollerman (finishing asphalt pavement); Roto Mill (pavement grinder); Scrapers, all rubber-tired; Screed Operator; Shovel (under 3 yds.); Tractors (D-6 & equilvalent & over); Trenching Machines (7 ft. depth & over); Tug Boat Operator; Vactor Guzzler, super sucker

GROUP 7: Backhoe (over 110,000 gw); Backhoes & Hoe Ram (3 yds. & over); Blade (finish & bluetop), Automatic, CMI, ABC, Finish Athey & Huber & similar when used as automatic; Cableway Operators; Clamshell Operator (3 yds. & over); Cranes (over 45 tons to but not including 85 tons), all attachments including clamshell and dragline; Derricks & Stifflegs (65 tons & over); Draglines (3 yds. & over); Elevating Belt (Holland type); Heavy Equipment Robotics Operator; Loader (360 degrees revolving Koehring Scooper or similar); Loaders (overhead & front-end, over 8 yds. to 10 yds.); Rubber-tired Scrapers (multiple engine with three or more scrapers); Shovels (3 yds. & over); Ultra High Pressure Wateriet Cutting Tool System Operator (30,000 psi); Vacuum Blasting Machine Operator; Whirleys & Hammerheads, ALL

GROUP 8: Cranes (85 tons and over, and all climbing, overhead, rail and tower); Loaders (overhead and front-end, 10 yards and over); Helicopter Pilot

BOOM PAY: (All Cranes, Including Tower)
180' to 250' $.30 over scale
Over 250' $.60 over scale

NOTE: In computing the length of the boom on Tower Cranes, they shall be measured from the base of the tower to the point of the boom.

HAZMAT: Anyone working on HAZMAT jobs, working with supplied air shall receive $1.00 an hour above classification.

ENGI0612B 06/01/1999

	Rates	Fringes

LEWIS, PIERCE, PACIFIC (portion lying north of a parallel line extending west from the northern boundary of Wahkaikum County to the sea) AND THURSTON COUNTIES

ON PROJECTS DESCRIBED IN FOOTNOTE A BELOW, THE RATE FOR EACH GROUP SHALL BE 90% OF THE BASE RATE PLUS FULL FRINGE BENEFITS. ON ALL OTHER WORK, THE FOLLOWING RATES APPLY.

POWER EQUIPMENT OPERATORS:
Zone 1 (0-25 radius miles):

GROUP 1AAA	27.51	7.38
GROUP 1AA	27.01	7.38
GROUP 1A	26.51	7.38
GROUP 1	26.01	7.38
GROUP 2	25.57	7.38
GROUP 3	25.21	7.38
GROUP 4	23.11	7.38

Zone Differential (Add to Zone 1 rates):
Zone 2 (26-45 radius miles) = $ .70
Zone 3 (Over 45 radius miles) - $1.00

BASEPOINTS: CENTRALIA, OLYMPIA, TACOMA

POWER EQUIPMENT OPERATORS CLASSIFICATIONS

GROUP 1 AAA - Cranes-over 300 tons or 300 ft of boom (including jib with attachments)

GROUP 1AA - Cranes- 200 tonsto 300 tons, or 250 ft of boom (including jib with attachments; Tower crane over 175 ft in height, bas to boom

GROUP 1A - Cranes, 100 tons thru 199 tons, or 150 ft of boom (including jib with attachments); Crane-overhead, bridge type, 100 tons and over; Tower crane up to 175 ft in height base to boom; Loaders-overhead, 8 yards and over; Shovels, excavator, backhoes-6 yards and over with attachments

GROUP 1 - Cableway; Cranes 45 tons thru 99 tons under 150 ft of boom (including jib with attachments); Crane-overhead, bridge type, 45 tons thru 99 tons; Derricks on building work; Excavator,

shovel, backhoes over 3 yards and under 6 yards; Hard tail end dump articulating off-road equipment 45 yards and over; Loader-overhead, 6 yards to, but not including, 8 yards; Mucking machine, mole, tunnel, drill and/or shield; Quad 9 HD 41, D-10; Remote control operator on rubber tired earth moving equipment; Rollagon; Scrapers-self-propelled 45 yards and over; Slipform pavers; Transporters, all track or truck type

GROUP 2 - Barrier machine (zipper); Batch Plant Operator-concrete; Bump Cutter; Cranes, 20 tons thru 44 tons with attachments; Crane-Overhead, bridge type, 20 tons through 44 tons; Chipper; Concrete pump-truck mount with boom attachment; Crusher; Deck engineer/deck winches (power); Drilling machine; Excavator, shovel, backhoe-3 yards and under; Finishing machine, Bidwell, Gamaco and similar equipment; Guardrail punch; Loaders, overhead under 6 yards; Loaders-plant feed; Locomotives-all; Mechanics- all; Mixers, asphalt plant; Motor patrol graders, finishing; Piledriver (other than crane mount); Roto-mill, roto-grinder; Screedman, spreader, topside operator-Blaw Knox, Cedar Rapids, Jaeger, Caterpillar, Barbar Green; Scraper-self-propelled, hard tail end dump, articulating off-road equipment-under 45 yards; Subgrader trimmer; Tractors, backhoe over 75 hp; Transfer material service machine-shuttle buggy, Blaw Knox-Roadtec; Truck Crane oiler/driver-100 tons and over; Truck Mount Portable Conveyor; Yo Yo pay

GROUP 3 - Conveyors; Cranes through 19 tons with attachments;

Crane-A-frame over 10 tons; Drill oilers-auger type, truck or crane mount; Dozer-D-9 and under; Forklift-3000 lbs. and over with attachments; Horizontal/directional drill locator; Outside Hoists-(elevators and manlifts), air tuggers, strato tower bucket elevators; Hydralifts/boom trucks over 10 tons; Loaders-elevating type, belt; Motor patrol grader-nonfinishing; Plant oiler-asphalt, crusher; Pump-Concrete; Roller, plant mix or multi-lfit materials; Saws-concrete; Scrapers, concrete and carry all; Service engineers-equipment; Trenching machines; Truck crane oiler/driver under 100 tons; Tractors, backhoe under 75 hp

GROUP 4 - Assistant Engineer; Bobcat; Brooms; Compressor; Concrete Finish Machine-laser screed; Cranes A-frame 10 tons and under; Elevator and manlift (permanent and shaft type); Forklifts-under 3000 lbs. with attachments; Gradechecker, stakehop; Hydralifts/boom trucks, 10 tons and under; Oil distributors, blower distribution and mulch seeding operator; Pavement breaker; Posthole digger-mechanical; Power plant; Pumps-water; Rigger and Bellman; Roller-other than plant mix; Wheel Tractors, farmall type; Shotcrete/gunite equipment operator

FOOTNOTE A- Reduced rates may be paid on the following:

1. Projects involving work on structures such as buildings and bridges whose total value is less than $1.5 million excluding mechanical, electrical, and utility portions of the contract.

2. Projects of less than $1 million where no building is involved. Surfacing and paving included, but utilities excluded.

3. Marine projects (docks, wharfs, etc.) less than $150,000.

HANDLING OF HAZARDOUS WASTE MATERIALS: Personnel in all craft classifications subject to working inside a federally designated hazardous perimeter shall be elgible for compensation in accordance with the following group schedule relative to the level of hazardous waste as outlined in the specific hazardous waste project site safety plan.

H-1 Base wage rate when on a hazardous waste site when not outfitted with protective clothing
H-2 Class "C" Suit - Base wage rate plus $ .25 per hour.
H-3 Class "B" Suit - Base wage rate plus $ .50 per hour.
H-4 Class "A" Suit - Base wage rate plus $ .75 per hour.

ENGI0701H 01/01/1999

CLARK, COWLITZ, KLICKITAT, PACIFIC (SOUTH), SKAMANIA, AND WAHKIAKUM COUNTIES

	Rates	Fringes
POWER EQUIPMENT OPERATORS (See Footnote A)		
ZONE 1:		
GROUP 1	25.91	8.20
GROUP 2	25.00	8.20
GROUP 3	24.30	8.20
GROUP 4	23.83	8.20
GROUP 5	23.27	8.20
GROUP 6	21.10	8.20

Zone Differential (add to Zone 1 rates):
Zone 2 - $1.50
Zone 3 - 3.00

For the following metropolitan counties: MULTNOMAH; CLACKAMAS; MARION; WASHINGTON; YAMHILL; AND COLUMBIA; CLARK AND COWLITZ COUNTY, WASHINGTON WITH MODIFICATIONS AS INDICATED:

All jobs or projects located in Multnomah, Clackamas and Marion counties, West of the western boundary of Mt. Hood National Forest and West of Mile Post 30 ON Interstate 84 and West of Mile Post 30 on State Highway 26 and West of Mile Post 30 on Highway 22 and all jobs located in Yamhill County, Washington County and Columbia County and all jobs or projects located in Clark and Cowlitz Counties, Washington except that portion of Cowlitz County in the Mt. St. Helens "Blast Zone" shall receive Zone I pay for all classifications.

All jobs or projects located in the area outside the identified boundary above, but less than 50 miles from the Portland City Hall shall receive Zone II pay for all classifications.

All jobs or projects located more than 50 miles from the Portland City Hall, but outside the identified border above, shall receive Zone III pay for all classifications.

For the following cities: ALBANY; COOS, BAY; EUGENE; GRANTS PASS; KLAMATH FALLS; MEDFORD; ROSEBURG

All jobs or projects located within 30 miles of the respective city hall of the above mentioned cities shall receive Zone I pay for all classifications.

All jobs of projects located more than 30 miles ans less than 50 miles from the respective city hall of the above mentioned cities shall receive Zone II pay for all classifications.

All jobs of projects located more than 50 miles from the respective city hall of the above mentioned cities shall receive Zone III pay for all classifications.

POWER EQUIPMENT OPERATORS CLASSIFICATIONS

GROUP 1: CONCRETE: Batch Plant and/or Wet Mix Operator, three units or more; CRANE: Crane Operator, over 200 tons; Whirley Operator 90 tons and over; Helicopter Operators, when used in erecting work; Floating Crane, 150 tons but less than 250 tons; Lattice Boom Crane - 200 tons and over, Boom 201' through 280'; FLOATING EQUIPMENT: Floating Crane, 250 tons and over

GROUP 2: ASPHALT: Asphalt Plant Operator (any type); Roto-mill, pavement profiler, operator, six foot lateral cut and over; BLADE: Auto Grader or "Trimmer" Operator (Grade Checker required); BULLDOZERS: Tandem bulldozer operator, quad-nine and similar type; D-11; Tandem Bulldozer Operator, Quad-nine and similar type; CONCRETE: Batch Plant and/or Wet Mix Operator, one and two drum; Automatic Concrete Slip Form Paver Operator; Concrete Canal Line Operator; Concrete Profiler, Diamond Head; CRANE: Cableway Operator, 25 tons and over; Crane Operator, over 40 tons and including 100 tons; Crane Operator, over 100 tons and including 200; Tower Crane Operator, over 80 tons and including 150 tons; Whirley Operator - under 90 tons; Lattice Boom Crane - 90 through 199 tons, Boom = 150' through 200'; CRUSHER: Crusher Plant Operator; FLOATING QUIPMENT: Floating Clamshell, etc. Operator, 3cu. yds. and over; Floating Crane (derrick barge) Operator, 30 tons but less than 80 tons; Floating Crane (derrick barge) Operator, 80 ton but less than 150 ton; LOADERS: Loader Operator, 6 cu. yds. but less than 12 cu. yds.; Loader Operator, 12 cu. yds. and over; REMOTE CONTROL: Remote controlled earth-moving equipment (no one operator shall operate more than two pieces of earth-moving equipment at one time); RUBBER-TIRED SCRAPERS: Rubber-tired Scraper Operator, with tandem scrapers, multi-engine; SHOVEL, DRAGLINE, CLAMSHELL, BACKHOE, SKOOPER, OPERATOR: Shovel, etc., 3 cu. yds., but less than 5 cu. yds.; Shovel, etc., 5 cu. yds. and over; TRENCH MACHINE: Wheel Excavator, under 750 cu. yds. per hour (Grade Oiler required); Canal Trimmer (Grade Oiler required); Wheel Excavator, over 750 cu. yds. per hour (two Operators and at least one Grade Oiler required); Band Wagon (in conjunction with wheel excavator); UNDERWATER EQUIPMENT: Underwater Equipment Operator, remote or otherwise, when used in construction work.

GROUP 3: CRANES: Lattice Boom Crane - 50 through 89 tons;

FORKLIFT: Rock Hound Operator; LOADERS: Loader Operator, 4 cu. yds. but less than 6 cu. yds.; Rubber-tired RUBBER-TIRED SCRAPERS: Scraper Operator, with tandem scrapers; Self-loading, paddle wheel, auger type, finish and/or 2 or more units

GROUP 4: ASPHALT: Screed Operator; Asphalt Paver Operator (Screed man required); Diesel-Electric engineer, Plant; Roto-Mill, pavement profiler, operator, under six foot lateral cut; BLADE: Blade Operator, externally controlled by electronic, mechanical hydraulic means; Blade operator, multi-engine; BULLDOZERS: Bulldozer Operator; Drill Cat Operator; Side-boom Operator; Bulldozer Operator, twin engine (TC 12 and similar type, D-10); Cable-Plow Operator (any type); CLEARING: Log Skidders; Chippers; Incinerator; Stump Splitter (loader mounted or similar type); Compactor Operator, with blade; Compactor Operator, multi-engine; CONCRETE: Mixer Mobile Operator; Screed Operator; Concrete Cooling Machine Operator; Concrete Paving Road Mixer; Concrete Breaker; Reinforced Tank Banding Machine (K-17 or similar types); CRANE: Chicago boom and similar types; Lift Slab Machine Operator; Boom type lifting device, 5 ton capacity or less; Cherry Picker or similar type crane-hoist, 5 ton capacity or less; Crane Operator, under 25 ton (except for rough terrain), Hoist Operator, two drum; Hoist Operator, three or more drums;

Derrick Operator, under 100 ton; Hoist Operator, stiff leg, guy derrick or similar type, 50 ton and over; Cableway Operator, up to twenty-five ton; Crane Operator, over twenty-five ton and including forty ton; Bridge Crane Operator; Locomotive, Gantry, Overhead; Lattice Boom Crane - 25 through 49 tons; CRUSHER: Generator Operator; Diesel-Electric Engineer; Grizzley Operator; DRILLING: Drill Doctor; Boring Machine Operator; Driller-Percussion, Diamond, Core, Cable, Rotary and similar type; Cat Drill (John Henry); FLOATING EQUIPMENT: Diesel-electric Engineer; Jack Operator, elevating barges, Barge Operator, self-unloading; Piledriver Operator (not crane type) (Deckhand required); Floating Clamshelll, etc. Operator, under 3 cu. yds. (Fireman or Diesel-Electric Engineer required); Floating Crane (derrick barge) Operator, less than 30 tons; GENERATORS: Generator Operator; Diesel-electric Engineer required); GUARDRAIL EQUIPMENT: Guardrail Punch Operator (all types); Guardrail auger Operator (all types); Combination Guardrail machines, i.e. punch, auger, etc.; HEATING PLANT: Surface Heater and Planer Operator; HYDRAULIC HOES: Hydraulic Backhoe Operator, Track Type 3/8 cu. yd. takes shovel Classif. rate); LOADERS: Belt Loaders, Kolman and Ko Cal types; Loaders Operator, front end and overhead, 2-1/2 cu. yds. and under 4 cu. yds.; Elevating Loader Operator, Athey and asimilar types; Elevating Grader Operator, operated by Tractor Operator, sierra, Euclid or similar types; PILEDRIVERS: Hammer Operator; Piledriver Operator (not crane type); Pipe Cleaning Machine Operator; Pipe Doping Machine Operator; PIPELINE, SEWER WATER: Pipe Bending Machine Operator; Pipe Wrapping Machine Operator; Boring Machine Operator; Back Filling Machine Operator; REPAIRMEN, HEAVY DUTY: Diesel-Electric Engineer (Plant or Floating); Bolt Treading Machine Operator; Drill Doctor (bit grinder); H.D. Mechanic; H.D. Welder; Machine Tool Operator; Combination H.D. Mechanic-Welder, when dispatched and/or when required to do both; Welder-Certified, when

dispatched and/or required; RUBBER-TIRED SCRAPERS: Rubber-tired Scraper Operator, single engine, single scraper; Self-loading, paddle wheel, auger type under 15 cu. yds.; rubber-tired Scraper Operator, twin engine; Rubber-tired Scraper Operator, with push-pull attachments; Self-loading, paddle wheel, auger type 15 cu. yds. and over, single engine; SHOVEL, DRAGLINE, CLAMSHELL, BACKHOE, SKOOPER OPERATOR: Diesel-Electric Engineer; Stationary Drag Scraper Operator; Shovel, Dragline, Clamshell, Hoe, etc., Operator, under 1 cu. yd.; Shovel, etc., 1 cu. yd. and less than 3 cu. yds.; Grade-all Operator, under 1 cu. yd.; Grade-all 1 cu. yd. and over; SURFACING (BASE) MATERIALS: Blade Mounted Spreaders, Ulrich and similar types; TRACTOR-RUBBER TIRED: Tractor Operator, rubber-tired, over 50 H.P. Flywheel; Tractor Operator, with boom attachment; Rubber-tired Dozers and Pushers (Michigan, Cat, Hough type); TRENCHING MACHINE: Trenching Machine Operator, maximum digging capacity over 3 ft. depth (Grade Oiler required); Back Filling Machine Operator; TUNNEL: Mucking Machine Operator; Shield Operator; Boring Machine Operator

GROUP 5: ASPHALT: Extrusion Machine Operator; Roller Operator (any asphalt mix); Asphalt Burner and reconditioner Operator (any type), 84; roto-mill, Pavement Profiler, ground man.;

COMPRESSORS: Compressor Operator any power), over 1,250 cu. ft. total capacity; COMPACTORS: Compactor Operator, including vibratory; Wagner Pactor Operator or similar type (without blade); CONCRETE: Combination mixer and Compressor Operator, gunite work; Concrete Batch Plant Quality Control Operator; Beltcrete Operator; Pumpcrete Operator (any type) Pavement Grinder and/or Grooving Machine Operator (riding type); Cement Pump Operator, Fuller-Kenyon and similar; Concrete Pump Operator; Grouting Machine Operator; Concrete Mixer Operator, single drum, under five bag capacity and over; Cast place pipe laying machine; Maginnis Internal Full Slab Vibrator Operator; Concrete Finishing machine Operator, Clary, Johnson, Bidwell, Burgess bridge deck or similar type; Curb Machine Operator, mechanical Berm, Curb and/or Curb and Gutter; Concrete Joint Machine Operator; Concrete Planer Operator; Tower Mobile Operator; Power Jumbo Operator setting slip forms; Concrete Paving Machine Operator; Concrete Finishing Machine Operator; Concrete Spreader Operator; CRANE: Helicopter Hoist Operator; Hoist Operator, single drum; Elevator Operator; A-frame Truck Operator, Double drum; Boom Truck Operator Hydraulic Boom Truck, Pittman; DRILLING: Churn Drill and earth Boring Machine Operator; FLOATING EQUIPMENT: Fireman; FORKLIFT: Lull Hi-Lift Operator or similar type; Fork Lift, over 5 ton; HYDRAULIC HOES: Hydraulic Backhoe Operator, wheel type 3/8 cu. yd and under with or without front end attachment 2-1/2 cu. yds. and under (Ford, John Deere, Case, Type); LOADERS: Loaders, rubber-tired type, 2-1/2 cu. yds. and under; Elevating Grader Operator, Tractor Towed requiring Operator or Grader; OILERS: Service Oiler (Greaser); PIPELINE, SEWER WATER: Hydra Hammer or similar types; Pavement Breaker Operator; RAILROAD EQUIPMENT: Locomotive Operator, under 40 tons; Ballast Regulator Operator; Ballast Tamper Multi-Purpose Operator; Track Liner Operator; Tie Spacer Operator; Shuttle Car Operator; Locomotive Operator, 40 tons and over; SURFACING (BASE) MATERIAL: Roller Operator,

Oiling, C.T.B.; Rock Spreaders self-propelled; Pulva-mixer or similar types; Chip Spreading Machine Operator Lime Spreading Operator, construction job site; SWEEPERS: Sweeper Operator (Wayne Tractor Operator, rubber-tired, 50 H.P. Flywheel and under; TRENCHING: Trench Machine Operator, maximum digging capacity 3 ft. depth

GROUP 6: ASPHALT: Plant Oiler; Plant Fireman; Pugmill Operator (any type); Truck mounted asphalt spreader, with screed; BLADE: Blade Operator, pulled type; COMPRESSORS: Compressor Operator (any power), under 1,250 cu. ft. total capacity; CONCRETE: Plant Oiler, Assistant Conveyor Operator; Conveyor Operator; Mixer Box Operator (C.T.B., dry batch, etc.); Cement Hog Operator; Concrete Saw Operator; Concrete Curing Machine Operator (riding type); Wire Mat or Brooming Machine Operator; CRANE: Oiler; Truck Crane Oiler-Driver, 25 tons capacity or over; Fireman, all equipment; A-frame Truck Operator, single drum; Tugger or Coffin Type Hoist Operator; CRUSHER: Crusher Oiler; Crusher Feederman; DRILLING: Drill Tender; Auger Oiler; FLOATING EQUIPMENT: Deckhand; Boatman; FORKLIFT: Self-propelled Scaffolding Operator, construction job site (excluding working platform); Fork Lift or Lumber Stacker Operator, construction job site; GUARDRAIL EQUIPMENT: Oiler, auger Oiler; Oiler, combination guardrail machines; Guardrail

Punch Oiler; HEATING PLANT: Temporary Heating Plant Operator; LOADERS: Bucket Elevator Loader Operator, Barber-Greene and similar types; Bobcat, Skid Steer - Under 1 yd; OILERS: Oiler; Guardrail Punch Oiler; Truck Crane Oiler-Driver, 25 ton or over; Auger Oiler; Grade Oiler, required to check grade; Grade Checker; Tar Pot Fireman; PIPELINE SEWER WATER: Tar Pot Fireman (power agitated); Hydraulic Pipe Press Operator; PUMPS: Pump Operator, under 4"; Pump Operator (any power), 4" and over; Hydrostatic Pump Operator; RAILROAD EQUIPMENT: Brakeman; Oiler; Switchman; Motorman; Ballast Jack Tamper Operator; REPAIRMAN HEAVY DUTY: Parts Man (Tool Room); SHOVEL, DRAGLINE, CLAMSHELL, BACKHOE, SKOOPER OPERATORS: Oiler; Grade Oiler (required to check grade); Grade Checker; Fireman; Signalman; Bell Boy, phones, etc., Operator; Helicopter Radioman (ground); SURFACING (BASE) MATERIAL: Roller Operator, grading of base rock (not asphalt); Tamping Machine Operator, mechanical, self-propelled; Hydrographic Seeder Machine Operator, staw, pulp or seed; SWEEPERS: Broom Operator, self-propelled, construction job site; TRENCHING: Oiler; Grade Oiler (required to check grade); TUNNEL: Conveyor Operator (any type); air Filtration Equipment Operator; Motormen (dinkey); Oiler; WELDING MACHINES: Welding Machine Operator

FOOTNOTE A: HANDLING OF HAZARDOUS WASTE MATERIALS: Personnel in all craft classifications subject to working inside a federally designated hazardous perimeter shall be eligible for compensation in accordance with the following group schedule relative to the level of hazardous waste as outline in the specific hazardous waste project site safety plan.

H-1 Base wage rate when on a hazardous waste site when not outfitted with protective clothing.

H-2 Class "C" Suit - Basic hourly wage rate plus $1.00 per hour, fringes plus $0.15.

H-3 Class "B" Suit - Basic hourly wage rate plus $1.50 per hour, fringes plus $0.15.
H-4 Class "A" Suit - Basic hourly wage rate plus $2.00 per hour, fringes plus $0.15.

IRON0086A 07/01/1999

	Rates	Fringes
IRONWORKERS	24.22	10.35

LABO0001I 06/01/1999

	Rates	Fringes
CHELAN AND KITTITAS COUNTIES		
LABORERS:		
ZONE 1:		
GROUP 1	13.89	5.41
GROUP 2	16.21	5.41
GROUP 3	17.93	5.41
GROUP 4	18.41	5.41
GROUP 5	18.77	5.41

ZONE DIFFERENTIAL (ADD TO ZONE 1 RATES):
ZONE 2 - $ .70
ZONE 3 - $1.00

BASE POINTS: CHELAN, SUNNYSIDE, WENATCHEE, AND YAKIMA

ZONE 1 - Projects within 25 radius miles of the respective city hall
ZONE 2 - More than 25 but less than 45 radius miles from the respective city hall
ZONE 3 - More than 45 radius miles from the respective city hall

CALLAM, GRAYS HARBOR, JEFFERSON, KING, KITSAP, LEWIS, MASON, PACIFIC (North of a straight line made by extending the north boundary of Wahkiakum County west to the Pacific Ocean), PIERCE, SNOHOMISH AND THURSTON COUNTIES

LABORERS:		
ZONE 1:		
GROUP 1	15.07	5.41
GROUP 2	17.39	5.41
GROUP 3	22.07	5.41
GROUP 4	22.55	5.41
GROUP 5	22.91	5.41

ZONE DIFFERENTIAL (ADD TO ZONE 1 RATES):
ZONE 2 - $ .70
ZONE 3 - $1.00

BASE POINTS: BELLINGHAM, MT. VERNON, EVERETT, SEATTLE, KENT, TACOMA, OLYMPIA, CENTRALIA, ABERDEEN, SHELTON, PT. TOWNSEND, PT. ANGELES, AND BREMERTON

ZONE 1 - Projects within 25 radius miles of the respective city hall
ZONE 2 - More than 25 but less than 45 radius miles from the respective city hall
ZONE 3 - More than 45 radius miles from the respective city hall

LABORERS CLASSIFICATIONS

GROUP 1: Landscaping and Planting; Watchman; Window Washer/Cleaner (detail clean-up, such as but not limited to cleaning floors, ceilings, walls, windows, etc., prior to final acceptance by the owner)
GROUP 2: Batch Weighman; Crusher Feeder; Fence Laborer; Flagman; Pilot Car

GROUP 3: General Laborer; Air, Gas, or Electric Vibrating Screed; Asbestos Abatement Laborer; Ballast Regulator Machine; Brush Cutter; Brush Hog Feeder; Burner; Carpenter Tender; Cement Finisher Tender; Change House or Dry Shack; Chipping Gun (under

30 lbs.); Choker Setter; Chuck Tender; Clean-up Laborer; Concrete Form Stripper; Curing Laborer; Demolition (wrecking and moving including charred material); Ditch Digger; Dump Person; Fine Graders; Firewatch; Form Setter; Gabian Basket Builders; Grout Machine Tender; Grinders; Guardrail Erector; Hazardous Waste Worker (Level C); Maintenance Person; Material Yard Person; Pot Tender; Rip Rap Person; Riggers; Scale Person; Sloper Sprayer; Signal Person; Stock Piler; Stake Hopper; Toolroom Man (at job site); Topper-Tailer; Track Laborer; Truck Spotter; Vinyl Seamer

GROUP 4: Cement Dumper-Paving; Chipping Gun (over 30 lbs.); Clary Power Spreader; Concrete Dumper/Chute Operator; Concrete Saw Operator; Drill Operator (hydraulic, diamond, aiartrac); Faller and Bucker Chain Saw; Grade Checker and Transit Person; Groutmen (pressure) including post tension beams; Hazardous Waste Worker (Level B); High Scaler; Jackhammer; Laserbeam Operator; Manhole Builder-Mudman; Mortarman and Hodcarrier; Nozzleman (concrete pump, green cutter when using combination of high pressure air and water on concrete and rock, sandblast, gunite, shotcrete, water blaster, vacuum blaster); Pavement Breaker; Pipe Layer and Caulker; Pipe Pot Tender; Pipe Reliner (not insert type); Pipe Wrapper; Power Jacks; Railroad Spike Puller-Power; Raker-Asphalt; Rivet Buster; Rodder; Sloper (over 20'); Spreader (concrete); Tamper and Similar electric, air and glas operated tool; Timber Person-sewer (lagger shorer and cribber); Track Liner Power; Tugger Operator; Vibrator; Well Point Laborer

GROUP 5: Caisson Worker; Miner; Powderman; Re-Timberman; Hazardous Waste Worker (Level A).

LABO0238I 06/01/1999

	Rates	Fringes
CHELAN COUNTY		
HOD CARRIERS	20.19	4.51

LABO0335C 06/01/1999

	Rates	Fringes
PACIFIC (South of a straight line made by extending the north boundary line of Wahkiakum County west to the Pacific Ocean) COUNTY		
ZONE 1:		
LABORERS:		
GROUP 1	21.25	6.36
GROUP 2	21.74	6.36
GROUP 3	22.10	6.36
GROUP 4	22.40	6.36
GROUP 5	19.21	6.36
GROUP 6	17.25	6.36
GROUP 7	14.68	6.36

LABORERS CLASSIFICATIONS

GROUP 1: Asphalt Plant Laborers; Asphalt Spreaders; Batch Weighman; Broomers; Brush Burners and Cutters; Car and Truck Loaders; Carpenter Tender; Change-House Man or Dry Shack Man; Choker Setter; Clean-up Laborers; Curing-concrete; Demolition, Wrecking, and Moving Laborers; Dumpers, road oiling crew; Dumpmen (for grading crew); Elevator Feeders; Guard Rail, Median Rail, Reference Post, Guide Post, Right-of-way Marker; Fine Graders; Fire Watch; Form Strippers (not swinging stages); General Laborers; Hazardous Waste Worker; Leverman or Aggregate Spreader (Flaherty and similar types); Loading Spotters; Material Yard Man (including electrical); Pittsburgh Chipper Operator or similar types; Railroad Track Laborers; Ribbon Setters (including steel forms); Rip Rap Man (hand placed); Road Pump Tender; Sewer Laborer; Signalman; Skipman; Slopers; Spraymen; Stake Chaser; Stockpiler; Tie Back Shoring; Timber Faller and Bucker (hand labor); Toolroom Man (at job site); Tunnel Bullgang (above ground); Weight-Man-Crusher (aggregate when used)

GROUP 2: Applicator (including pot power tender for same), applying protective material by hand or nozzle on utility lines or storage tanks on project; Brush (power saw); Burners; Choker Splicer; Clary Power Spreader and similar types; Clean up-nozzleman-Green cutter (concrete, rock, etc.); Concrete Laborer; Concrete Power Buggyman; Crusher Feeder; Demolition and Wrecking Charred Materials; Gunite Nozzleman Tender; Gunite or Sand Blasting Pot Tender; Handlers or Mixers of all Materials of an irritating nature (including cement and lime); Pipe Doping & Wrapping; Tool Operators (includes but not limited to: Dry pack machine, Jackhammer, Chipping guns, Paving breakers); Post Hole Digger, air, gas or electric; Vibrating Screed; Tampers; Sand Blasting (wet); Stake-Setter; Tunnel-Muckers, Brakemen, Concrete Crew, Bull gang (Underground)

GROUP 3: Asbestos Removal (structural removal only); Bit Grinder; Drill Doctor; Drill Operators, air tracks cat drills, wagon drills, rubber-mounted drills, and other similar types;

Concrete Saw Operator; Gunite Nozzleman; High scalers, strippers and drillers (covers work in swinging stages, chairs or belts, under extreme conditions unusual to normal drilling, blasting, barring-down, or sloping and stripping); Manhole Builder; Powdermen; Power Saw Operators (Bucking and Falling); Pumpcrete Nozzlemen; Sand Blasting (dry); Sewer Timberman; Track Liners; Anchor Machines; Ballast Regulators; Multiple Tampers; Power Jacks; Tugger Operator; Tunnel-Chuck Tenders, Nippers and Timbermen; Vibrator; Water Blaster

GROUP 4: Asphalt Raker; Concrete Saw Operator (walls); Concrete Nozzelman; Grade Checker; Pipelayer; Laser Beam (Tunnel) applicable when assigned to move, set up, align laser beam; Miner-Tunnel; Motorman-dinky Locomotive-Tunnel; Powderman-Tunnel; Shield Operator-Tunnel

GROUP 5: Traffic Flaggers

GROUP 6: Fence Builders

GROUP 7: Landscaping and Planting Laborers

ZONE DIFFERENTIAL (ADD TO ZONE 1 RATES):

ZONE 2 - $0.65
ZONE 3 - 1.15
ZONE 4 - 1.70
ZONE 5 - 2.75

ZONE DEFINITIONS

BASE POINTS: GOLDENDALE, LONGVIEW, AND VANCOUVER

ZONE 1: Projects within 30 miles of the respective city halL
ZONE 2: More than 30 miles but less than 40 miles from the respective city hall.
ZONE 3: More than 40 miles but less than 50 miles from the respective city hall.
ZONE 4: More than 50 miles but less than 80 miles from the respective city hall.
ZONE 5: More than 80 miles from the respective city hall.

PAIN0005A 03/01/1999

	Rates	Fringes
CLALLAM, GRAYS HARBOR, JEFFERSON, KING, KITSAP, LEWIS, MASON, PACIFIC, PIERCE, SNOHOMISH AND THURSTON COUNTIES		
PAINTERS	21.85	3.55

PAIN0005C 06/10/1999

	Rates	Fringes
CLALLAM, GRAYS HARBOR, JEFFERSON, KING, KITSAP, LEWIS, MASON, PIERCE, SNOHOMISH AND THURSTON COUNTIES		
DRYWALL FINSIHERS	24.65	7.38

PAIN0054A 07/01/1998

	Rates	Fringes
CHELAN AND KITTITAS COUNTIES		
PAINTERS:		
BRUSH, PAPERHANGER, STEAM-CLEANING, STRIPING and SPRAY	18.80	3.67
TV, RADIO, ELECTRICAL TRANSMISSION TOWERS	20.39	3.67

PAIN0054G 09/01/1999

	Rates	Fringes
CHELAN AND KITTITAS COUNTIES		
GLAZIERS	16.32	3.17

PAIN0054I 06/01/1999

	Rates	Fringes
CHELAN AND KITTITAS COUNTIES		
DRYWALL FINISHER (TAPER)	19.98	4.25

PAIN0055M 02/01/1996

	Rates	Fringes
PACIFIC COUNTY		
DRYWALL FINSIHERS	22.15	5.63

PAIN0188A 07/01/1999

	Rates	Fringes
CLALLAM, JEFFERSON, KING, KITSAP, LEWIS, MASON, PIERCE, SNOHOMISH AND THURSTON COUNTIES		
GLAZIERS	25.61	5.38

PAIN0188B 07/01/1999

	Rates	Fringes
GRAYS HARBOR AND PACIFIC COUNTIES		
GLAZIERS	13.88	4.12

PAIN1238A 06/01/1999

	Rates	Fringes
CALLAM, GRAYS HARBOR, JEFFERSON, LEWIS, MASON, PACIFIC (NORTHERN PORTION), PIERCE AND THURSTON COUNTIES		
SOFT FLOOR LAYERS	20.61	5.61

PAIN1238D 07/01/1999

	Rates	Fringes
KING, KITSAP AND SNOHOMISH COUNTIES		
SOFT FLOOR LAYERS	22.18	5.64

PLAS0072C 06/01/1999

	Rates	Fringes
CHELAN AND KITTITAS COUNTIES		
Zone 1:		
CEMENT MASONS	20.75	5.24

Zone Differential (Add to Zone 1 rates): Zone 2 - $2.00

BASE POINTS: Spokane, Pasco, Moses Lake, and Lewiston

Zone 1: 0 - 45 radius miles from the main post office
Zone 2: 45 radius miles from the main post office

PLAS0082D 06/01/1999

	Rates	Fringes
PACIFIC (South of a straight line made by extending the north boundary line of Wahkiakum County west to the Pacific Ocean) COUNTY		
PLASTERERS	23.91	6.36

PLAS0528B 06/01/1998

	Rates	Fringes
CLALLAM, GRAYS HARBOR, JEFFERSON, KING, KITSAP, LEWIS, MASON, PACIFIC (North of a straight line made by extending the north boundary line of Wahkiakum Count, west to the Pacific Ocean), PIERCE, SNOHOMISH AND THURSTON COUNTIES		
CEMENT MASONS	23.80	7.89

PLUM0032A 06/01/1998

	Rates	Fringes
CHELAN AND KITTITAS (NORTHERN TIP) COUNTIES		
PLUMBERS AND PIPEFITTERS	23.47	8.67

PLUM0032B 06/01/1998

	Rates	Fringes
CLALLAM, KING AND JEFFERSON COUNTIES		
PLUMBERS AND PIPEFITTERS	29.48	10.08

PLUM0082D 06/01/1999

	Rates	Fringes
GRAYS HARBOR, LEWIS, MASON (EXCLUDING NE SECTION), PACIFIC, PIERCE AND THURSTON COUNTIES		
PLUMBERS AND PIPEFITTERS	22.42	13.95

PLUM0265A 06/01/1999

	Rates	Fringes
SNOHOMISH COUNTY		
PLUMBERS AND PIPEFITTERS:	28.37	9.54

PLUM0598B 06/21/1999

	Rates	Fringes
KITTITAS (ALL BUT NORTHERN TIP)		
PLUMBERS AND PIPEFITTERS	28.10	10.30

PLUM0631A 06/01/1999

	Rates	Fringes
MASON (NE SECTION), AND KITSAP COUNTIES		
PLUMBERS/PIPEFITTERS:		
All new construction, additions, and remodeling of commercial building projects such as: cocktail lounges and taverns, professional buildings, medical clinics, retail stores, hotels and motels, restaurants and fast food types, gasoline service stations, and car washes where the plumbing and mechanical cost of the project is less than $100,000	14.55	7.98
All other work where the plumbing and mechanical cost of the project is $100,000 and over	23.00	12.28

ROOF0054A 06/20/1999

	Rates	Fringes
CLALLAM, JEFFERSON, KING, KITSAP, MASON AND SNOHOMISH COUNTIES		
ROOFERS	24.30	5.73

ROOF0153A 06/01/1998

	Rates	Fringes
GRAYS HARBOR, LEWIS, PACIFIC, PIERCE AND THURSTON COUNTIES		
ROOFERS	20.60	5.84

ROOF0189A 07/01/1997

	Rates	Fringes
CHELAN COUNTY		
ROOFERS	17.00	6.05

ROOF0189E 07/01/1997

	Rates	Fringes
KITTITAS COUNTY		
ROOFERS	17.60	5.60

SFWA0699B 07/01/1999

	Rates	Fringes
KING, KITSAP, PIERCE, SNOHOMISH AND THURSTON COUNTIES		
SPRINKLER FITTERS	27.65	10.55

SHEE0066D 06/01/1999

	Rates	Fringes
CHELAN COUNTY		
SHEET METAL WORKERS	23.10	6.75

SHEE0066F 06/01/1999

	Rates	Fringes
CLALLAM, JEFFERSON, KING, KITSAP, MASON (NORTHERN PORTION) AND SNOHOMISH COUNTIES		
SHEET METAL WORKERS	27.56	8.57

SHEE0066G 06/01/1999

	Rates	Fringes
GRAYS HARBOR, LEWIS, MASON (SOUTHERN PORTION), PACIFIC, PIERCE AND THURSTON COUNTIES		
SHEET METAL WORKERS	27.47	8.36

SHEE0066M 06/01/1999

	Rates	Fringes
KITTITAS COUNTY		
SHEET METAL WORKERS	24.43	7.12

TEAM0174B 06/01/1999

	Rates	Fringes
CLALLAM, GRAYS HARBOR, JEFFERSON, KING, KITSAP, LEWIS, MASON, PACIFIC (North of a straight line made by extending the north boundary line of Wahkiakum County west to the Pacific Ocean), PIERCE, SNOHOMISH AND THURSTON COUNTIES		
TRUCK DRIVERS:		
GROUP 1:	23.05	8.21
GROUP 2:	22.47	8.21
GROUP 3:	20.43	8.21
GROUP 4:	16.68	8.21
GROUP 5:	22.22	8.21

TRUCK DRIVERS CLASSIFICATIONS

GROUP 1 -"A-frame or Hydralift" trucks and Boom trucks or similar equipment when "A" frame or "Hydralift" and Boom truck or similar equipment is used; Buggymobile; Bulk Cement Tanker; Dumpsters and similar equipment, Tournorockers, Tournowagon, Tournotrailer, Cat DW series, Terra Cobra, Le Tourneau, Westinghouse, Athye Wagon, Eucid Two and Four-Wheeled power tractor with trailer and similar top-loaded equipment transporting material: Dump Trucks, side, end and bottom dump, including semi-trucks and trains or combinations thereof with 16 yards to 30 yards capacity: Over 30 yards $.15 per hour additional for each 10 yard increment; Explosive Truck (field mix) and similar equipment; Hyster Operators (handling bulk loose aggregates); Lowbed and Heavy Duty Trailer; Road Oil Distributor Driver; Spreader, Flaherty Transit mix used exclusively in heavy construction; Water Wagon and Tank Truck-3,000 gallons and over capacity

GROUP 2 - Bulllifts, or similar equipment used in loading or unloading trucks, transporting materials on job site; Dumpsters, and similar equipment, Tournorockers, Tournowagon, Turnotrailer, Cat. D.W. Series, Terra Cobra, Le Tourneau, Westinghous, Athye wagon, Euclid two and four-wheeled power tractor with trailer and similar top-loaded equipment transporting material, Dump trucks, side, end and bottom dump, including semi-trucks and trains or combinations thereof with less than 16 yards capacity; Flatbed: (Dual Rear Axle); Grease Truck, Fuel Truck, Greaser, Battery Service Man and/or Tire Service Man; Leverman and loader at bunkers and batch plants; Oil tank transport; Scissor, Slurry Truck; Sno-Go and similar equipment; Swampers; Straddler Carrier (Ross, Hyster) and similar equipment; Team Driver; Tractor (small rubber-tired (when used within Teamster jurisdiction); Vacuum truck; Water Wagon and Tank trucks-less than 3,000 gallons capacity; Winch truck; Wrecker, tow truck and similar equipment

GROUP 3 - Flatbed: single rear axle; Pickup sweeper, Pickup Truck (Adjust upward by $2.00 per hour for onsite work)

GROUP 4 - Escort or pilot driver

GROUP 5 - Mechanic

HAZMAT PROJECTS

Anyone working on a HAZMAT job, where HAZMAT certification is required, shall be compensated as a premium, in addition to the classification working in as follows:
LEVEL C: +$.25 per hour - This level uses an air purifying respirator or additional protective clothing.
LEVEL B: +$.50 per hour - Uses same respirator protection as Level A. Supplied air line is provided in conjunction with a chemical "splash suit."
LEVEL A: +$.75 per hour - This level utilizes a fully-

encapsulated suit with a self-contained breathing apparatus or a supplied air line.

ZONE DIFFERENTIAL

Zone pay will be calculated from the city center of the following listed cities:

BELLINGHAM	CENTRALIA	RAYMOND	OLYMPIA
EVERETT	SHELTON	ANACORTES	BELLEVUE
SEATTLE	PORT ANGELES	MT. VERNON	KENT
TACOMA	PORT TOWNSEND	ABERDEEN	BREMERTON

Zone A - 0 - 25 miles - Free Zone
Zone B - 25 - 45 miles - $ .70 per hour
Zone C - Over 45 miles - $1.00 per hour

TEAM0760F 06/01/1999

	Rates	Fringes
EAST OF THE 120TH MERIDIAN: CHELAN AND KITTITAS COUNTIES		
(ANYONE WORKING ON HAZMAT JOBS SEE FOOTNOTE A BELOW)		
TRUCK DRIVERS:		
GROUP 1	19.02	7.31
GROUP 2	21.66	7.31
GROUP 3	21.77	7.31
GROUP 4	22.10	7.31
GROUP 5	22.21	7.31
GROUP 6	23.37	7.31
GROUP 7	22.91	7.31
GROUP 8	23.23	7.31

TRUCK DRIVERS CLASSIFICATIONS

GROUP 1: Escort Driver or Pilot Car; Employee Haul; Power Boat Hauling Employees or Material

GROUP 2: Fish Truck; Flat Bed Truck; Fork Lift (3000 lbs. and under); Trailer Mounted Hydro Seeder and Mulcher; Leverperson (loading trucks at bunkers); Seeder & Mulcher; Stationary Fuel

Operator; Tractor (small, rubber-tired, pulling trailer or similar equipment)

GROUP 3: Auto Crane (2000 lbs. capacity); Buggy Mobile & Similar; Bulk Cement Tanks & Spreader; Dumptor (6 yds. & under); Flat Bed Truck with Hydraulic System; Fork Lift (3001-16,000 lbs.); Fuel Truck Driver; Steamcleaner & Washer; Power Operated Sweeper; Rubber-tired Tunnel Jumbo; Scissors Truck; Slurry Truck Driver; Straddle Carrier (Ross, Hyster, & similar); Tireperson; Transit Mixers & Truck Hauling Concrete (3 yd. to & including 6 yds.); Trucks, side, end, bottom and articulated end dump (3 yards to and including 6 yds.); Warehouseperson (to include shipping & receiving); Wrecker & Tow Truck

GROUP 4: A-Frame; Burner, Cutter, & Welder; Service Greaser; Trucks, side, end, bottom and articulated end dump (over 6 yds. to & including 12 yds.); Truck Mounted Hydro Seeder; Warehouseperson; Water Tank truck (0-8000 gallons)

GROUP 5: Dumpster (over 6 yds.); Lowboy (50 tons & under); Self-Loading Roll Off; Semi-Truck & Trailer; Tractor with Steer Trailer; Transit Mixers and Trucks Hauling Concrete (over 6 yds. to and including 10 yds.); Trucks, side, end, bottom and articulated end dump (over 12 yds. to & including 20 yds.); Truck-Mounted Crane (with load bearing surface either mounted or pulled)(up to 14 ton); Vacuum Truck (super sucker, guzzler, etc.)

GROUP 6: Flaherty Spreader Box Driver; Flowboys; Fork Lift (over 16,000 lbs.); Dumps (Semi-end); Lowboy (over 50 tons); Mechanic (Field); Transfer Truck and Trailer; Transit Mixers & Trucks Hauling Concrete (over 10 yds. to & including 20 yds.); Trucks, side, end, bottom and end dump (over 20 yds. to & including 40 yds.); Truck and Pup; Tournarocker, DW's & similar with 2 or more 4 wheel-power tractor with trailer, gallonage or yardage scale, whichever is greater; Water Tank Truck (8,001-14,000 gallons)

GROUP 7: Oil Distributor Driver; Stringer Truck (cable operated trailer); Transit Mixers & Hauling Concrete (over 20 yds.); Truck, side, end, bottom and articulated end dump (over 40 yds. to & including 100 yds.); Truck Mounted Crane (with load bearing surface either mounted or pulled (16 through 25 tons)

GROUP 8: Prime Movers and Stinger Truck; Trucks, side, end, bottom and articulated end dump (over 100 yds.); Helicopter Pilot Hauling Employees or Materials

Footnote A- Anyone working on a HAZMAT job, where HAZMAT certification is required, shall be compensated as a premium, in additon to the classification working in as follows:

LEVEL D: - $.25 PER HOUR (This is the lowest level of protection. No respirator is used and skin protection is minimal.
LEVEL C: - $.50 PER HOUR (This level uses an air purifying respirator or additional protective clothing.
LEVEL B: - $.75 PER HOUR (Uses same respirator protection as Level A. Supplied air line is provided in conjunc-

tion with a chemical "spash suit."
LEVEL A: - $1.00 PER HOUR (this level utilizes a fully-encapsulated suit with a self-contained breathing apparatus or a supplied air line.

WELDERS - Receive rate prescribed for craft performing operation for which welding is incidental.

Unlisted classifications needed for work not included within

the scope of the classifications listed may be added after award only as provided in the labor standards contract clauses (29 CFR 5.5(a)(1)(v)).

In the listing above, the "SU" designation means that rates listed under that identifier do not reflect collectively bargained wage and fringe benefit rates. Other designations indicate unions whose rates have been determined to be prevailing.

WAGE DETERMINATION APPEALS PROCESS

1.) Has there been an initial decision in the matter? This can be:
* an existing published wage determination
* a survey underlying a wage determination
* a Wage and Hour Division letter setting forth a position on a wage determination matter
* a conformance (additional classification and rate) ruling

On survey related matters, initial contact, including requests for summaries of surveys, should be with the Wage and Hour Regional Office for the area in which the survey was conducted because those Regional Offices have responsibility for the Davis-Bacon survey program. If the response from this initial contact is not satisfactory, then the process described in 2.) and 3.) should be followed.

With regard to any other matter not yet ripe for the formal process described here, initial contact should be with the Branch of Construction Wage Determinations. Write to:

Branch of Construction Wage Determinations
Wage and Hour Division
U. S. Department of Labor
200 Constitution Avenue, N. W.
Washington, D. C. 20210

2.) If the answer to the question in 1.) is yes, then an interested party (those affected by the action) can request review and reconsideration from the Wage and Hour Administrator (See 29 CFR Part 1.8 and 29 CFR Part 7). Write to:

Wage and Hour Administrator

U.S. Department of Labor
200 Constitution Avenue, N. W.
Washington, D. C. 20210

The request should be accompanied by a full statement of the interested party's position and by any information (wage payment

data, project description, area practice material, etc.) that the requestor considers relevant to the issue.

3.) If the decision of the Administrator is not favorable, an interested party may appeal directly to the Administrative Review Board (formerly the Wage Appeals Board). Write to:

Administrative Review Board
U. S. Department of Labor
200 Constitution Avenue, N. W.
Washington, D. C. 20210

4.) All decisions by the Administrative Review Board are final.

END OF GENERAL DECISION

TABLE OF CONTENTS

TECHNICAL SPECIFICATIONS

Section No.	Section Title
	DIVISION 1 - GENERAL REQUIREMENTS
01001	Supplementary Requirements
01005	Site Specific Supplementary Requirements
01025	Payment
01035	Modification Procedures
01320	Project Schedule
01330	Submittal Procedures
01410	Environmental Protection
01415	Metric Measurements
01451	Contractor Quality Control
01501	Construction Facilities and Temporary Controls
01701	Operations and Maintenance Manuals
01702	As-Built Records and Drawings
01703	Warranty of Construction
01704	Form 1354 Checklist
01705	Equipment-In-Place List
	DIVISION 2 - SITE WORK
02220	Demolition
02300	Earthwork
02315	Excavation, Filling and Backfilling for Buildings
02316	Excavation, Trenching, and Backfilling for Utilities Systems
02510	Water Distribution System
02524	Grass Paving System
02531	Sanitary Sewers
02556	Gas Distribution System
02630	Storm- Drainage System
02722	Aggregate Base Course
02741	Bituminous Paving for Roads, Streets and Open Storage Areas
02763	Pavement Markings
02770	Concrete Sidewalks, Dumpster Pads, and Equipment Pads, and Curbs and Gutters
02780	Concrete Block Pavement
02811	Irrigation Sprinkler Systems
02870	Site Furnishings
02922	Sodding
02930	Exterior Planting

Section No.	Section Title
	DIVISION 3 - CONCRETE
03100	Structural Concrete Formwork
03150	Expansion Joints, Contraction Joints, and Waterstops
03200	Concrete Reinforcement
03300	Concrete for Building Construction
03413	Precast Architectural Concrete
	DIVISION 4 - MASONRY
04200	Masonry
04220	Nonbearing Masonry Veneer/Steel Stud Walls
	DIVISION 5 - METALS
05090	Welding, Structural
05120	Structural Steel
05300	Steel Decking
05500	Miscellaneous Metal
	DIVISION 6 - WOOD AND PLASTICS
06100	Rough Carpentry
06200	Finish Carpentry
	DIVISION 7 - THERMAL & MOISTURE PROTECTION
~~07110~~	~~Bituminous Dampproofing~~
07210	Building Insulation
07220	Roof Insulation
07416	Structural Standing Seam Metal Roofing (SSSMR) System
07600	Sheet Metalwork, General
07625	Copper Sheet Metal Flashing
07840	Firestopping
07900	Joint Sealing
	DIVISION 8 - DOORS & WINDOWS
08110	Steel Doors and Frames
08120	Aluminum Doors and Frames
08330	Overhead Rolling Doors
08400	Aluminum Storefronts and Entrance Doors
08520	Aluminum Windows
08700	Builders' Hardware
08810	Glass and Glazing

Section No.	Section Title
08950	Engineered Translucent Skylight and Wall Systems
	DIVISION 9 - FINISHES
09250	Gypsum Wallboard
09310	Ceramic Tile
09510	Acoustical Ceilings
09620	Resilient Athletic Flooring
09640	Wood Athletic Flooring
09650	Resilient Flooring
09680	Carpet
09720	Wall Covering
09900	Painting, General
	DIVISION 10 - SPECIALTIES
10110	Directory Board and Tackboard
10160	Toilet Partitions
10200	Exterior Louvers and Vents
10440	Interior Signage
10505	Solid Phenolic Lockers
10520	Fire Extinguisher Cabinets
10800	Toilet Accessories
	DIVISION 11 - EQUIPMENT
11480	Athletic Equipment
	DIVISION 12 - FURNISHINGS
12320	Cabinets and Countertops
12660	Electrically Operated Telescoping Stands
12675	Floor Mat and Frame
	DIVISION 13 - SPECIAL CONSTRUCTION
13052	Saunas
13080	Seismic Protection For Mechanical, Electrical Equipment
13120	Standard Metal Building Systems
13202	Fuel Storage Systems
13280	Asbestos Abatement
13850	Fire Detection and Alarm System, Direct Current Loop
13930	Wet Pipe Sprinkler System, Fire Protection

Section No.	Section Title

DIVISION 14 - CONVEYING SYSTEMS

(Not Used)

DIVISION 15 - MECHANICAL

15070	Seismic Protection for Mechanical Equipment
15080	Thermal Insulation For Mechanical Systems
15190	Gas Piping Systems
15400	Plumbing, General Purpose
15569	Water Heating, Gas
15845	Energy Recovery Systems
15895	Air Supply, Distribution, Ventilation, and Exhaust System
15951	Direct Digital Control for HVAC
15990	Testing, Adjusting and Balancing of HVAC Systems
15995	Commissioning of HVAC Systems

DIVISION 16 - ELECTRICAL

16070	Seismic Protection for Electrical Equipment
16375	Electrical Distribution System, Underground
16415	Electrical Work, Interior
16528	Exterior Lighting Including Security and CCTV Applications
16710	Premises Distribution System
16711	Telephone System, Outside Plant
16751	Closed Circuit Television Systems
16770	Radio and Public Address Systems

SECTION 01001

SUPPLEMENTARY REQUIREMENTS

PART 1 GENERAL

1.1 DEFINITIONS

The references listed below are to be defined as indicated wherever they may be used in the TECHNICAL SPECIFICATIONS.

"SUPPLEMENTARY REQUIREMENTS " shall be read to pertain to any of the sections of the DIVISION 1 as required by the content of the section or paragraph containing the reference.

Specification “SECTION 01300 – SUBMITTALS” shall be read as a specification “SECTION 01330 – SUBMITTAL PROCEDURES”.

Specification “SECTION 01400 – CONTRACTOR QUALITY CONTROL” shall be read as a specification “SECTION 01451 – CONTRACTOR QUALITY CONTROL”.

1.2 CONSTRUCTION SCHEDULING

The instructions for preparation and submittal of the Contractor-prepared Network Analysis System are found in SECTION 01320, PROJECTSCHEDULE.

1.3 CORRESPONDENCE

1.3.1 All correspondence shall be addressed to the Administrative Contracting Officer, shall be serially numbered commencing with Number 1, with no numbers missing or duplicated and shall be furnished with an original and one copy. Enclosures attached or transmitted with the correspondence shall also be furnished with an original and one copy. Each serial letter shall make reference to the contract name, contract number and shall have only one subject.

1.3.2 All correspondence from the Contracting Officer will be also serially numbered with no numbers missing or duplicated. Letters to the Contractor will be forwarded in duplicate.

1.3.3 In the event there is more than one project within a contract, correspondence shall contain separate and distinct submittals to identify each project by name.

1.3.4 For submission of Contractor payment requests, See Section 01025, PAYMENT.

1.4 ADVANCED NOTICE OF CONTRACTOR PERFORMED ACCEPTANCE TESTING

The Contractor shall notify the Contracting Officer a minimum of 20 days prior to performing any acceptance or "buy off" testing of the following systems, (1) EMCS, (2) Fire Detection/Protection, (3) Intrusion Detection System, (4) Uninterruptible Power Supply, and (5) HVAC. Advance notification is not required for testing performed as part of fabrication or installation.

1.5 CONTRACTOR'S FILES

Contractor shall maintain "Approved (Action Code "A") and "Approved Except as Noted (Action Code "B") shop drawing files in fabrication shops and at project sites for government use.

1.6 AUDIO-VIDEO RECORDINGS

1.6.1 General

The Contractor shall provide all equipment, materials, and trained personnel to visually and audibly record (video tape) all on site operations and maintenance (O&M) training sessions for this contract. The video technician shall be employed by a video production company that has been in business for a minimum of 2 years. The Contractor shall submit the resume of the technician and video production company. Also the Contractor shall submit for approval an agenda or an outline breakdown of the proposed presentation. Video tapes shall be produced in the VHS format. Audio shall be adjusted, filtered or otherwise controlled to insure that the trainer can be understood at all times. Each system or piece of equipment shall be covered in a single tape or set of tapes which shall be correlated with the O&M manuals provided. Video tapes and their individual storage cases shall be identified with a typewritten label showing the project, equipment or system, and contract number; this same information shall be provided as an introduction on each video tape. When two or more tapes are provided, they shall be submitted as a set in an appropriate storage container.

1.6.2 Submittals

Prior to conducting the training sessions the following shall be submitted for approval:

1) A training plan consisting of the agenda or an outline breakdown of the proposed presentation and

2) The qualifications of the trainer and the video recording technician

Two copies of the video taped material shall be submitted to the Contracting Officer within 10 days after completion of video taping the training sessions.

1.7 MECHANICAL AND ELECTRICAL LAYOUT DRAWINGS

The Contractor shall submit, for Contracting Officer's approval, scaled layout drawings, including appropriate elevations and sections, as required, showing the room arrangement the Contractor proposes for all pieces of mechanical and electrical equipment and appurtenances thereto, such as but not limited to: air conditioning equipment, boilers, compressors, hot water tanks, pumps, electrical control panels, ducts and piping, etc., that are to be located in the room. Mechanical and electrical layouts shall be coordinated to eliminate any conflicts of installed equipment. No payments will be made to the Contractor for furnishing or installing equipment until the layout drawings have been approved by the Contracting Officer. Mechanical and electrical equipment layout drawings shall be identified and submitted as specified herein. Equipment rooms shown on the drawings are of adequate size to accommodate equipment of required capacities as available from several manufacturers with sufficient space left for access, servicing, and removal. The use of equipment items with dimensions such as "to crowd the space" will not be permitted.

1.8 IDENTIFICATION OF EMPLOYEES AND MILITARY REGULATIONS:

(a) The Contractor shall be responsible for compliance with all regulations and orders of the Commanding Officer of the Military Installation, respecting identification of employees, movements on installation, parking, truck entry, and all other military regulations which may affect the work.

(b) The work under this Contract is to be performed at an operating Military Installation with consequent restrictions on entry and movement of nonmilitary personnel and equipment.

(c) The Commanding Officer of Fort Lewis, Washington, has initiated the following specific requirement regarding vehicle registration for this contract.

Contractors performing work on Fort Lewis shall, after award, register all vehicles to be used on the installation with the Vehicle Registration Section of the Law Enforcement Command. Contractor employees entering the installation in privately owned vehicles (POVs) shall also register their vehicles. A copy of contract award, proof of liability insurance, current driver's license and state vehicle registration shall be required to register Contractor, subcontractor, and employee vehicles.

Upon completion of the contract, it shall be the prime contractor's responsibility to collect all vehicle decals issued under the contract including those issued to employees and subcontractors. Decals are to be carefully removed from the vehicle, placed in an envelope and attached to the original documentation (i.e., post vehicle registration document) received with the decal. Decals, with documentation, must be returned to Vehicle Registration, Building 5236. Proof of decal clearance for all vehicles registered under this contract will be issued to the prime contractor and shall be returned to the Contracting Officer prior to final payment.

In the event of contract extension, it shall be the prime contractor's responsibility to report time extension to Vehicle Registration, with evidence of same. For further information, contact Vehicle Registration, Building 5236 (Telephone: (206) 967-7668), Fort Lewis, Washington 98433-5000.

1.9 PRESERVATION OF HISTORICAL, ARCHEOLOGICAL AND CULTURAL RESOURCES (1985 JAN OCE):

If, during construction activities, the Contractor observes items that might have historical or archeological value, such observations shall be reported immediately to the Contracting Officer so that the appropriate authorities may be notified and a determination can be made as to their significance and what, if any, special disposition of the finds should be made. The Contractor shall cease all activities that may result in the destruction of these resources and shall prevent his employees from trespassing on, removing, or otherwise damaging such resources.

1.10 SPECIAL SAFETY REQUIREMENTS:

All construction activities shall be conducted in strict compliance with the Corps of Engineers Safety and Health Requirements Manual EM 385-1-1, and Occupational Safety and Health Administration regulations, as applicable. The manual is available on line at:

http://www.usace.army.mil/inlet/usace-docs/eng-manuals/em385-1-1/toc.htm

1.10.1 In addition to Safety and Health Requirements Manual EM 385-1-1, and all applicable OSHA standards, the Contractor shall comply with the requirements listed below. Paragraph numbers refer to EM 385-1-1 or are added thereto.

(a) Paragraph 01.A.12: Add new paragraph: Safety Personnel. The Contractor shall designate a person on his staff to manage the Contractor's safety and accident prevention program. This person will provide a point of contact for the Contracting Officer on matters of job safety, and shall be responsible for ensuring the health and safety of on site personnel.

(b) Paragraph 01.D.02, revise as follows:

(1) Replace paragraph 01.D.02c with the following:
"c. Property damage in excess of $2,000.00

(2) Add new paragraph d as follows:
"An injury resulting in a lost workday, not including the day of injury."

1.11 TIME EXTENSIONS FOR UNUSUALLY SEVERE WEATHER (ER 415-1-15 31 OCT 89)

This Paragraph specifies the procedure for the determination of time extensions for unusually severe weather in accordance with the CONTRACT CLAUSE entitled "Default (Fixed Price Construction)". In order for the Contracting Officer to award a time extension under this clause, the following conditions must be satisfied:

1.11.1 The weather experienced at the project site during the contract period must be found to be unusually severe, that is, more severe than the adverse weather anticipated for the project location during any given month.

1.11.2 The unusually severe weather must actually cause a delay to the completion of the project. The delay must be beyond the control and without the fault or negligence of the contractor.

1.11.3 The following schedule of monthly anticipated adverse weather delays is based on National Oceanic and Atmospheric Administration (NOAA) or similar data for the project location and will constitute the base line for monthly weather time evaluations. The contractor's progress schedule must reflect these anticipated adverse weather delays in all weather dependent activities.

MONTHLY ANTICIPATED ADVERSE WEATHER DELAY
WORK DAYS BASED ON (5) DAY WORK WEEK

JAN	FEB	MAR	APR	MAY	JUN	JUL	AUG	SEP	OCT	NOV	DEC
9	8	8	4	2	3	1	2	4	7	10	10

1.10.4 Upon acknowledgment of the notice to proceed (NTP) and continuing throughout the contract, the contractor will record on the daily QCQ report, the occurrence of adverse weather and resultant impact to normally scheduled work. Actual adverse weather delays must prevent work on critical activities for 50 percent or more of the contractor's scheduled work day.

1.10.5 The number of actual adverse weather delay days shall include days impacted by actual adverse weather (even if adverse weather occurred in previous month), be calculated chronologically from the first to the last day of each month, and be recorded as full days. If the number of actual adverse weather delay days exceeds the number of days anticipated in paragraph 1.15.3, above, the Contracting Officer will convert any qualifying delays to calendar days, giving full consideration for equivalent fair weather work days, and issue a modification in accordance with the contract clause entitled " Default (Fixed Price Construction)".

PARTS 2 AND 3 NOT USED

END OF SECTION

This page intentionally blank

SECTION 01005

SITE SPECIFIC
SUPPLEMENTARY REQUIREMENTS

1. CONDUCT OF WORK

1.1 COORDINATION AND ACCESS TO SITE

1.1.1 Coordination with using agencies shall be made through the Contracting Officer to assist the Contractor in completing the work with a minimum of interference and inconvenience.

1.1.2 All Contractor-owned and privately-owned vehicles require an access pass/vehicle decal. This pass is obtained from the Fort Lewis Vehicle Registrar, Building 5236 by showing proof of insurance; the vehicle registration; Washington State driver's license; and a letter with original signature of prime Contractor or his superintendent stating the contract name and number, the contract period for which the pass is required, and the employee's name. See Paragraph IDENTIFICATION OF EMPLOYEES AND MILITARY REGULATIONS in SECTION 01001 for specific requirements.

1.1.3 When keys are required for access to facilities on this contract, they shall be obtained through the Contracting Officer.

1.1.3.1 The Contractor shall be responsible for Government-owned keys issued for access to facilities or areas pertinent to this contract.

1.1.3.2 Upon completion of the work in an area, or upon request of the Contracting Officer, the key or keys relevant to the completed areas shall be returned.

1.1.3.3 Should the Contractor lose a key:

a. the Contracting Officer shall be notified, in writing, within three (3) working days after the loss is discovered and

b. should the key not be found before final acceptance, the final contract payment shall be reduced by $100 for each key not returned.

1.1.4 Work hours in the construction area will be restricted to 7:30 a.m. to 4 p.m. daily, Monday through Friday, excluding Federal holidays. Work hours other than as specified above shall be coordinated with and approved by the Contracting Officer.

1.1.5 Contractor's workmen shall have on either a uniform with the firm name and the workman's last name or shall have a badge pinned on with both the firm name and the workman's photograph and full name.

1.2 UTILITY OUTAGES

Contractor shall coordinate utility outages with the Contracting Officer at least 7 days in advance. Outages shall be kept to a minimum and any one outage shall not last more than 2 hours. All utility work shall be

performed in such a way as to minimize traffic impact. Access to the existing gymnasium shall be provided throughout the construction period.

1.3 PROTECTION OF GOVERNMENT PROPERTY

In addition to requirements of the CONTRACT CLAUSES, Contractor shall protect all Government property within the buildings in which he is working, except for such property as is required to be demolished. Property which is to be demolished shall be protected until its scheduled demolition time. Protection shall include, but not be limited to, protection from construction generated dust, debris, water, and vibration.

1.4 SEQUENCE AND COORDINATION OF WORK

The existing gymnasium shall remain in operation throughout the construction period, with minimal construction interruption. Demolition and remodelling work in and around the existing gymnasium shall be completed in the shortest reasonable period at the outset of the construction with the exception of direct buried 1800 pair telephone cable along the southwest and southeast tides of the existing building, which shall remain operational until the new telephone cable is in place, accepted and usable (see drawing Plate C1.3 for more information). Uninterupted access to the existing gym shall be provided throughout the construction period. Doors on the south-east side of the existing gym may be used as entrance if necessary.

END OF SECTION

SECTION 01025

PAYMENT

1.1 GENERAL

The contract price for each item shall constitute full compensation for furnishing all plant, labor, materials, appurtenances, and incidentals and performing all operations necessary to construct and complete the items in accordance with these specifications and the applicable drawings, including surveying performed by the Contractor. Payment for each item shall be considered as full compensation, notwithstanding that minor features may not be mentioned herein. Work paid for under one item will not be paid for under any other item. No separate payment will be made for the work, services, or operations required by the Contractor, as specified in DIVISION 1, GENERAL REQUIREMENTS, to complete the project in accordance with these specifications; all costs thereof shall be considered as incidental to the work.

1.2 PAYMENT

1.2.1 ITEM 0001 (BASE ITEM)

Payment will be made at the contract lump sum price for Item No. 0001, All work for Athletic Complex within the line 1.5 meters outside the building wall lines, except for base Items Nos. 0003 through 0007, payment of which shall constitute full compensation for Item No. 0001, complete.

1.2.2 ITEM 0002 (BASE ITEM)

Payment will be made at the contract lump sum price for Item No. 0002, Sitework and utilities beyond the line 1.5 meters outside the building wall lines, payment of which shall constitute full compensation for Item No. 0002, complete.

1.2.3 DELETED ITEM 0003 (BASE ITEM)

~~Payment will be made at the contract lump sum price for Item No. 0003, Intrusion Detection System, payment of which shall constitute full compensation for Item No. 0003, complete. Work paid under this item includes all material, labor, and equipment necessary to provide intrusion detection system as specified, complete and usable, including any software necessary for its operation.~~

1.2.4 ITEM 0004 (BASE ITEM)

Payment will be made at the contract lump sum price for Item No. 0004, Fire Extinguishers, payment of which shall constitute full compensation for Item No. 0004, complete. Work paid under this item includes all material, labor, and equipment necessary to furnish and install fire extinguishers as specified.

1.2.5 ITEM 0005 (BASE ITEM)

Payment will be made at the contract lump sum price for Item No. 0005, As-Built Drawings in Electronic Format as Specified, from Preparation to Final Submittal, payment of which shall constitute full compensation for Item No. 0005, complete. No partial or total payment will be made for this item until the as-built drawings, both marked up blue prints and electronic files, are fully approved by the Government (A or B action) and all copies of approved drawings and electronic media received by the Government.

1.2.6 ITEM 0006 (BASE ITEM)

Payment will be made at the contract lump sum price for Item No. 0006, All Work for O & M manuals, as Specified, from preparation to final submittal, payment of which shall constitute full compensation for Item No. 0006, complete. No partial or total payment will be made for this item until all O&M manuals are fully approved by the Government (A or B action) and all copies of final manuals are received by the Government in their final binders.

1.2.7 ITEM 0007 (BASE ITEM)

Payment will be made at the contract lump sum price for Item No. 0007, All Work for 1354 Data/ Installed Equipment List, as Specified, from Preparation to Final Submittal, payment of which shall constitute full compensation for Item No. 0007, complete. No partial or total payment will be made for this item until both the 1354 Checklist and Equipment in Place List are fully approved by the Government (A or B action) and all copies of approved lists received by the Government.

1.3 PROGRESS PAYMENT INVOICE

Requests for payment shall be submitted in accordance with Federal Acquisition Regulations (FAR) Subpart 32.9, entitled "PROMPT PAYMENT", and Paragraphs 52.232-5 and 52.232-27, entitled "Payments Under Fixed-Price Construction Contracts", and "Prompt Payment for Construction Contracts", respectively. In addition each request shall be submitted in the number of copies and to the designated billing office as shown in the Contract.

1.3.1 When submitting payment requests, the Contractor shall complete Blocks 1 through 12 of the "PROGRESS PAYMENT INVOICE" Form as directed by the Contracting Officer. (A sample form is attached at the end of this Technical Specification Section.) The completed form shall then become the cover document to which all other support data shall be attached.

1.3.2 One additional copy of the entire request for payment, to include the "PROGRESS PAYMENT INVOICE" cover document, shall be forwarded to a separate address as designated by the Contracting Officer.

1.3.3 The Contractor shall submit with each pay request, a list of subcontractors that have worked during that pay period. The listing shall be broken down into weeks, identifying each subcontractor that has worked during a particular week, and indicate the total number of employees that have worked on site for each subcontractor for each week. The prime Contractor shall also indicate the total number of employees for its on site staff for each week.

PARTS 2 and 3 NOT USED

PROGRESS PAYMENT INVOICE

See Federal Acquisition Regulations (FAR) 32.900, 52.232-5, & 52.232-27

1. PROJECT AND LOCATION	2. DATE
3. CONTRACTOR NAME AND ADDRESS (Must be the same as in the Contract)	4. CONTRACT NO. _____ 5. INVOICE NO.
6. DESCRIPTION OF WORK	7. PERIOD OF PERFORMANCE From: To:
8. DISCOUNT TERMS	
9. OFFICIAL TO WHOM PAYMENT IS TO BE FORWARDED Name: Title: Phone: ( ) -	10. OFFICIAL TO BE NOTIFIED OF DEFECTIVE INVOICE Name: Title: Phone ( ) -

11. CERTIFICATION: I hereby certify, to the best of my knowledge and belief, that

(1) The amounts requested are only for the performance in accordance with the specifications, terms, and conditions of this contract;

(2) Payments to subcontractors and suppliers have been made from previous payments received under the contract, and timely payments will be made from the proceeds of the payment covered by this certification, in accordance with subcontract agreements and the requirements of Chapter 39 of Title 31, United States Code; and

(3) This request for progress payment does not include any amounts which the prime contractor intends to withhold or retain from a subcontractor or supplier in accordance with the terms and conditions of the subcontract.

_____ _____ _____

(Signature) **(Title)** **(Date)**

12. OTHER INFORMATION OR DOCUMENTATION required by Contract. Provide two (2) copies of each (check and attach if applicable): _____ Updated Progress Chart/Schedule _____ Progress Narrative _____ Certified Payrolls (submitted weekly) _____ Safety Exposure Report _____ Updated Submittal \register _____ Progress Photos _____ Subcontractor/Employee Listings	(FOR GOVERNMENT USE ONLY) Retainage: _____% Amt: $_____ Withholdings: $ _____ Reason: _____ _____ Following items are current: As-Builts _____ Yes _____ No O & M Manuals _____ Yes _____ No 1354 Data _____ Yes _____ No Submittal Register _____Yes _____No

END OF SECTION

This page intentionally blank

SECTION 01035

MODIFICATION PROCEDURES

PART 1 GENERAL

1.1 PROPOSED PROJECT MODIFICATIONS:

Price proposals for proposed modifications shall be submitted in accordance with the requirements of the Contract Clause MODIFICATION PROPOSALS - PRICE BREAKDOWNS. If change order work impacts or delays other unchanged contract work, the costs of such impacts or delays shall be included in the proposals and separately identified. Additional instructions for submitting price proposals can be found in NPSP-415-1-1, INSTRUCTION AND INFORMATION FOR CONTRACTORS, a copy of which will be furnished to the Contractor at the Preconstruction Conference. For information applicable to equipment rates used in contract modifications, refer to 00800 - SPECIAL CLAUSES, clause “EQUIPMENT OWNERSHIP AND OPERATING EXPENSE SCHEDULE”.

PART 2 PRODUCTS (NOT USED)

PART 3 EXECUTION (NOT USED)

END OF SECTION

This page intentionally blank

SECTION 01320

PROJECT SCHEDULE

PART 1 GENERAL

1.1 SUBMITTALS

Government approval is required for submittals with a "GA" designation; submittals having an "FIO" designation are for information only. The following shall be submitted in accordance with Section 01300 SUBMITTALS:

SD-07 Schedules

GA Preliminary project schedule, two (2) copies.

GA initial project schedule, two (2) copies
Activity No. Sort
Predecessor/successor listing
Cost Schedule
Floppy Disk (SDEF Format)
Activity Code Dictionary.

FIO Periodic schedules updates, monthly updates two (2) copies.
Floppy Disks (SDEF Format)
Narrative
Activity No. Sort
Cost Schedule

SD-08 Statements

Qualifications; GA .

Documentation showing qualifications of personnel preparing schedule reports.

1.2 QUALIFICATIONS

The Contractor shall designate an authorized representative who shall be responsible for the preparation of all required project schedule reports. This person shall have previously created and reviewed computerized schedules. Qualifications of this individual shall be submitted to the Contracting Officer for review with the Preliminary Project Schedule submission.

PART 2 PRODUCTS (Not Applicable)

PART 3 EXECUTION

3.1 GENERAL

Pursuant to the Contract Clause, SCHEDULE FOR CONSTRUCTION CONTRACTS a Project Schedule as described below shall be prepared. The scheduling of construction shall be the responsibility of the Contractor. Contractor management personnel shall actively participate in its development. Subcontractors and suppliers working on the project should also contribute in developing and maintaining an accurate Project Schedule. The approved Project Schedule shall be used to measure the progress of the work, to aid in evaluating time extensions, and to provide the basis of all progress payments.

3.2 BASIS FOR PAYMENT

The schedule shall be the basis for measuring Contractor progress. Lack of an approved schedule or scheduling personnel shall result in an inability of the Contracting Officer to evaluate Contractor progress for the purposes of payment. Failure of the Contractor to provide all information, as specified below, shall result in the disapproval of the entire Project Schedule submission and the inability of the Contracting Officer to evaluate Contractor progress for payment purposes. In the case where Project Schedule revisions have been directed by the Contracting Officer and those revisions have not been included in the Project Schedule, then the Contracting Officer may hold retainage up to the maximum allowed by contract, each payment period, until revisions to the Project Schedule have been made.

3.3 PROJECT SCHEDULE

The computer software system utilized by the Contractor to produce the Project Schedule shall be capable of providing all requirements of this specification including the SDEF (Standard Data Exchange Format). Failure of the Contractor to meet the requirements of this specification shall result in the disapproval of the schedule. Manual methods used to produce any required information shall require approval by the Contracting Officer.

3.3.1 Use of the Critical Path Method

The Critical Path Method (CPM) of network calculation shall be used to generate the Project Schedule. The Contractor shall provide the Project Schedule in Precedence Diagram Method (PDM)

3.3.2 Level of Detail Required

With the exception of the initial and preliminary schedule submission, the Project Schedule shall include an appropriate level of detail. Failure to develop or update the Project Schedule or provide data to the Contracting Officer at the appropriate level of detail, as specified by the Contracting Officer, shall result in the disapproval of the schedule. The Contracting Officer will use, but is not limited to, the following conditions to determine the appropriate level of detail to be used in the Project Schedule.

3.3.2.1 Activity Durations

Contractor submissions shall be required to follow the direction of the Contracting Officer regarding reasonable activity durations. Reasonable durations are those that allow the progress of activities to be accurately determined between payment periods. A rule of thumb, that the Contractor should use, is that less than 2 percent of all non-procurement activities' Original Durations shall be greater than 20 days.

3.3.2.2 Procurement Activities

Tasks related to the procurement of long lead materials or equipment shall be included as separate activities in the project schedule. Long lead materials and equipment are those materials that have a procurement cycle of over 90 days. Examples of procurement process activities include, but are not limited to: submittals, approvals, procurement, fabrication, delivery, installation, start-up, and testing.

3.3.2.3 Government Activities

Government and other agencies activities that could impact progress shall be shown. These activities include, but are not limited to: approvals, inspections, utility tie-in, Government Furnished Equipment (GFE) and notice to proceed for phasing requirements.

3.3.2.4 Responsibility

All activities shall be identified in the project schedule by the party responsible to perform the work. Responsibility includes, but is not limited to, the subcontracting firm, (at the lowest tier), contractor work force, or government agency performing a given task. Activities shall not belong to more than one responsible party. The responsible party for each activity shall be identified by the Responsibility Code.

3.3.2.5 Work Areas

All activities shall be identified in the project schedule by the work area in which the activity occurs. Activities shall not be allowed to cover more than one work area. The work area of each activity shall be identified by the Work Area Code.

3.3.2.6 Modification or Claim Number

Any activity that is added or changed by contract modification or used to justify claimed time shall be identified by a mod or claim code that changed the activity. Activities shall not belong to more than one modification or claim item. The modification or claim number of each activity shall be identified by the Mod or Claim Number.

3.3.2.7 Bid Item

All activities shall be identified in the project schedule by the Bid Item to which the activity belongs. An activity shall not contain work in more than one bid item. The bid item for each appropriate activity shall be identified by the Bid Item Code.

3.3.2.8 (Not used)

3.3.2.9 Category of Work

All Activities shall be identified in the project schedule according to the category of work which best describes the activity. Category of work refers, but is not limited to, to the procurement chain of activities including such items as submittals, approvals, procurement, fabrication, delivery, installation, start-up, and testing. The category of work for each activity shall be identified by the Category of Work Code.

3.3.2.10 Feature of Work

All activities shall be identified in the project schedule according to the feature of work to which the activity belongs. Feature of work refers, but is not limited to a work breakdown structure for the project. The feature of work for each activity shall be identified by the Feature of Work Code.

3.3.3 Scheduled Project Completion

The schedule interval shall extend from notice-to-proceed to the contract completion date.

3.3.3.1 Project Start Date

The schedule shall start no earlier than the date that the Notice to Proceed (NTP) was acknowledged. The Contractor shall include as the first activity in the project schedule an activity called "Start Project". The "Start Project" activity shall have: a "ES" constraint, a constraint date equal to the date that the NTP was acknowledged, and a zero day duration.

3.3.3.2 Constraint of Last Activity

Completion of the last activity in the schedule shall be constrained by the contract completion date. Calculation on project updates shall be such that if the early finish of the last activity falls after the contract completion date, then the float calculation shall reflect a negative float on the critical path. The Contractor shall include as the last activity in the project schedule an activity call "End Project". The "End Project" activity shall have: a "LF" constraint, a constraint date equal to the completion date for the project, and a zero day duration.

3.3.3.3 Early Project Completion

In the event the project schedule shows completion, the project prior to the contract completion date, the Contractor shall identify those activities that have been accelerated and/or those activities that are scheduled in parallel to support the Contractor's "early" completion. Contractor shall specifically address each of the activities noted at every project schedule update period to assist the Contracting Officer to evaluate the Contractor's ability to actually complete prior to the contract period.

3.3.4 Interim Completion Dates

Contractually specified interim completion dates shall also be constrained to show negative float if the early finish date of the last activity in that phase falls after the interim completion date.

3.3.5 Default Progress Data Disallowed

Actual Start and Finish dates shall not be automatically updated by default mechanisms that may be included in CPM scheduling software systems. Actual Start and Finish dates on the CPM schedule shall match those dates provided from Contractor Quality Control Reports. Failure of the Contractor to document the Actual Start and Finish dates on the Daily Quality Control report for every in progress or completed activity and insure that the data contained on the Daily Quality Control reports is the sole basis for schedule updating shall result in the disapproval of the Contractor's schedule and the inability of the Contracting Officer to evaluate Contractor progress for payment purposes.

3.3.6 Out-of-Sequence Progress

Activities that have posted progress without predecessors being completed (Out-of-Sequence Progress) shall be allowed only by the case-by-case approval of the Contracting Officer. The Contracting Officer may direct that changes in schedule logic be made to correct any or all out-of-sequence work.

3.3.7 Negative Lags

Lag durations contained in the project schedule shall not have a negative value.

3.4 PROJECT SCHEDULE SUBMISSIONS

The Contractor shall provide the submissions as described below. The data disk, reports, and network diagrams required for each submission are contained in paragraph SUBMISSION REQUIREMENTS.

3.4.1 Preliminary Project Schedule Submission

The Preliminary Project Schedule, defining the Contractor's planned operations for the first 60 calendar days shall be submitted for approval within 10 calendar days after Notice to Proceed is acknowledged. The approved preliminary schedule shall be used for payment purposes not to exceed 60 calendar days after Notice to Proceed.

3.4.2 Initial Project Schedule Submission

The Initial Project Schedule shall be submitted for approval within 40 calendar days after Notice to Proceed. The schedule shall provide a reasonable sequence of activities which represent work through the entire project and shall be at a reasonable level of detail.

3.4.3 Periodic Schedule Updates

Based on the result of progress meetings, specified in "Periodic Progress Meetings," the Contractor shall submit periodic schedule updates. These submissions shall enable the Contracting Officer or to assess Contractor's progress. If the Contractor fails or refuses to furnish the information and project schedule data, which in the judgment of the Contracting Officer or authorized representative, is necessary for verifying the contractor's progress, the Contractor shall be deemed not to have provided an estimate upon which progress payment may be made.

3.4.4 Standard Activity Coding Dictionary

The Contractor shall submit, with the Initial Project Schedule, a coding scheme that shall be used throughout the project for all activity codes contained in the schedule. The coding scheme submitted shall list the values for each activity code category and translate those values into project specific designations. For example, a Responsibility Code Value, "ELE", may be identified as "Electrical Subcontractor." Activity code values shall represent the same information throughout the duration of the contract. Once approved with the Initial Project Schedule submission, changes to the activity coding scheme must be approved by the Contracting Officer.

3.5 SUBMISSION REQUIREMENTS

The as noted in paragraph 1.1 items shall be submitted by the Contractor for the initial submission, and every periodic project schedule update throughout the life of the project:

3.5.1 Data Disks

Two data disks containing the project schedule shall be provided. Data on the disks shall be in the format specified in paragraph 3.10 NAS DATA.

3.5.1.1 File Medium

Required data shall be submitted on 3.5 disks, formatted to hold 1.44 MB of data, or CD (Contractor’s option), under the MS-DOS latest version operating system.

3.5.1.2 Disk Label

A permanent exterior label shall be affixed to each disk submitted. The label shall indicate the type of schedule (Initial, Update, or Change), full contract number, project name, project location, data date, name and telephone number or person responsible for the schedule, and the MS-DOS version used to format the disk.

3.5.1.3 File Name

Each file submitted shall have a name related to either the schedule data date, project name, or contract number. The Contractor shall develop a naming convention that will insure that the names of the files submitted are unique. The Contractor shall submit the file naming convention to the Contracting Officer for approval.

3.5.2 Narrative Report

A Narrative Report shall be provided with each update of the project schedule. This report shall be provided as the basis of the Contractor's progress payment request. The Narrative Report shall include: a description of activities along the critical path, a description of current and anticipated problem areas or delaying factors and their impact, and an explanation of corrective actions taken.

3.5.3 Approved Changes Verification

Only project schedule changes that have been previously approved by the Contracting Officer shall be included in the schedule submission. The Narrative Report shall specifically reference, on an activity by activity basis, all changes made since the previous period and relate each change to documented, approved schedule changes.

3.5.4 Schedule Reports

The format for each activity for the schedule reports listed below shall contain: Activity Numbers, Activity Description, Original Duration, Remaining Duration, Early Start Date, Early Finish Date, Late Start Date, Late Finish Date, Total Float. Actual Start and Actual Finish Dates shall be printed for those activities in-progress or completed.

3.5.4.1 Activity Report

A list of all activities sorted according to activity number. For completed activities the Actual Start Date shall be used as the secondary sort.

3.5.4.2 Logic Report

A list of Preceding and Succeeding activities for every activity in ascending order by activity number and then sorted according to Early Start Date. For completed activities the Actual Start Date shall be used as the secondary sort.

3.5.4.3 Total Float Report

A list of all activities sorted in ascending order of total float. Activities which have the same amount of total float shall be listed in ascending order of Early Start Dates.

3.5.4.4 Earnings Report

A compilation of the Contractor's Total Earnings on the project from the Notice to Proceed until the most recent Monthly Progress Meeting. This report shall reflect the Earnings of specific activities based on the agreements made in the field and approved between the Contractor and Contracting Officer at the most recent Monthly Progress Meeting. Provided that the Contractor has provided a complete schedule update, this report shall serve as the basis of determining Contractor Payment. Activities shall be grouped by bid item and sorted by activity numbers. This report shall: sum all activities in a bid item and provide a bid item percent; complete and sum all bid items to provide a total project percent complete. The printed report shall contain, for each activity: Activity Number, Activity Description, Original Budgeted Amount, Total Quantity, Quantity to Date, Percent Complete (based on cost), Earnings to Date.

3.5.5 Network Diagram

The network diagram shall be required on the initial schedule submission and on quarterly update submissions. The network diagram shall depict and display the order and interdependence of activities and the sequence in which the work is to be accomplished. The Contracting Officer will use, but is not limited to, the following conditions to review compliance with this paragraph:

3.5.5.1 Continuous Flow

Diagrams shall show a continuous flow from left to right with no arrows from right to left. The activity or event number, description, duration, and estimated earned value shall be shown on the diagram.

3.5.5.2 Project Milestone Dates

Dates shall be shown on the diagram for start of project, any contract required interim completion dates, and contract completion dates.

3.5.5.3 Critical Path

The critical path shall be clearly shown.

3.5.5.4 Banding

Activities shall be grouped to assist in the understanding of the activity sequence. Typically, this flow will group activities by category of work, work area and/or responsibility.

3.5.5.5 S-Curves

Earnings curves shall be provided showing projected early and late earnings and earnings to date.

3.6 PERIODIC PROGRESS MEETINGS

Progress meetings to discuss payment shall include a monthly on-site meeting or other regular intervals mutually agreed to at the preconstruction conference. During this meeting the Contractor will describe, on an activity by activity basis, all proposed revisions and adjustments to the project schedule required to reflect the current status of the project. The Contracting Officer will approve activity progress, proposed revisions, and adjustments as appropriate.

3.6.1 Meeting Attendance

The Contractor's Project Manager and Scheduler shall attend the regular progress meeting.

3.6.2 Update Submission Following Progress Meeting

A complete update of the project schedule containing all approved progress, revisions, and adjustments, based on the regular progress meeting, shall be submitted not later than 4 working days after the monthly progress meeting.

3.6.3 Progress Meeting Contents

Update information, including Actual Start Dates, Actual Finish Dates, Remaining Durations, and Cost to Date shall be subject to the approval of the Contracting Officer. The following minimum set of items which the Contractor shall address, on an activity by activity basis, during each progress meeting.

3.6.3.1 Start and Finish Dates

The Actual Start and Actual Finish dates for each activity currently in-progress or completed activities.

3.6.3.2 Time Completion

The estimated Remaining Duration for each activity in-progress. Time-based progress calculations must be based on Remaining Duration for each activity.

3.6.3.3 Cost Completion

The earnings for each activity started. Payment shall be based on earnings for each in-progress or completed activity. Payment for individual activities shall not be made for work that contains quality defects. A portion of the overall project amount may be retained based on delays of activities.

3.6.3.4 Logic Changes

All logic changes pertaining to Notice to Proceed on change orders, change orders to be incorporated into the schedule, contractor proposed changes in work sequence, corrections to schedule logic for out-of-sequence progress, lag durations, and other changes that have been made pursuant to contract provisions shall be specifically identified and discussed.

3.6.3.5 Other Changes

Other changes required due to delays in completion of any activity or group of activities are those delays beyond the Contractors control such as strikes and unusual weather. Also included are delays encountered due to submittals, Government Activities, deliveries or work stoppage which makes re-planning the work necessary, and when the schedule does not represent the actual prosecution and progress of the work.

3.7 REQUESTS FOR TIME EXTENSIONS

In the event the Contractor requests an extension of the contract completion date, he shall furnish such justification, project schedule data and supporting evidence as the Contracting Officer may deem necessary for a determination as to whether or not the Contractor is entitled to an extension of time under the provisions of the contract. Submission of proof of delay, based on revised activity logic, duration, and costs (updated to the specific date that the delay occurred) is obligatory to any approvals.

3.7.1 Justification of Delay

The project schedule must clearly display that the Contractor has used, in full, all the float time available for the work involved with this request. The Contracting Officer's determination as to the number of allowable days of contract extension, shall be based upon the project schedule updates in effect for the time period in question and other factual information. Actual delays that are found to be caused by the Contractor's own actions, which result in the extension of the schedule, shall not be a cause for a time extension to the contract completion date.

3.7.2 Submission Requirements

The Contractor shall submit a justification for each request for a change in the contract completion date of under two weeks based upon the most recent schedule update at the time of the Notice to Proceed or constructive direction issued for the change. Such a request shall be in accordance with the requirements of other appropriate Contract Clauses and shall include, as a minimum:

a. A list of affected activities, with their associated project schedule activity number.

b. A brief explanation of the causes of the change.

c. An analysis of the overall impact of the changes proposed.

d. A sub-network of the affected area.

Activities impacted in each justification for change shall be identified by a unique activity code contained in the required data file.

3.7.3 Additional Submission Requirements

For any request for time extension for over 2 weeks, the Contracting Officer may request an interim update with revised activities for a specific change request. The Contractor shall provide this disk within 4 days of the Contracting Officer's request.

3.8 DIRECTED CHANGES

If Notice to Proceed (NTP) is issued for changes prior to settlement of price and/or time, the Contractor shall submit proposed schedule revisions to the Contracting Officer within 2 weeks of the NTP being issued. The proposed revisions to the schedule will be approved by the Contracting Officer prior to inclusion of those changes within the project schedule. If the Contractor fails to submit the proposed revisions, the Contracting Officer may furnish the Contractor suggested revisions to the project schedule. The Contractor shall include these revisions in the project schedule until the Contractor submits revisions, and final changes and impacts have been negotiated. If the Contractor has any objections to the revisions furnished by the Contracting Officer, then the Contractor shall advise the Contracting Officer within 2 weeks of receipt of the revisions. Regardless of the objections, the Contractor will continue to update their schedule with the Contracting Officer's revisions until a mutual agreement in the revisions may be made. If the Contractor fails to submit alternative revisions within 2 weeks of receipt of the Contracting Officer's proposed revisions, the Contractor will be deemed to have concurred with the Contracting Officer's proposed revisions. The proposed revisions will then be the basis for an equitable adjustment for performance of the work.

3.9 OWNERSHIP OF FLOAT

Float available in the schedule, at any time, shall not be considered for the exclusive use of either the Government or the Contractor.

3.10 NAS DATA

The Contractor shall provide the Government with the means electronically transfer all required NAS data into its ADP equipment and schedule software, such that it can independently obtain and process the information. The Contractor may use network analysis software different from that used by the Contracting Officer in the Resident Office. Under this alternative, the Contractor shall furnish the following:

NAS data that complies with the Scheduling System Data Exchange Format (SDEF). This is a standard ASCII format for exchanging scheduling data and is compatible with our resident management system. Many software developers are using SDEF. The SDEF specifications are in a separate publication, from the Internet WWW.CECER.AARMY.MIL/PL/SDEF.

-- END OF SECTION --

This page intentionally blank

SECTION 01330

SUBMITTAL PROCEDURES

PART 1 GENERAL

1.1 CONTROL AND SCHEDULING OF SUBMITTALS

1.1.1 Submittal Coordination Meeting

After the preconstruction conference and before any submittals are sent to the Contracting Officer's Representative (COR), with the exception of Division 1 submittals, the Contractor shall meet with the COR and provide and further develop an approved preliminary submittal register, ENG Form 4288. During the meeting all required items will be identified and grouped into three categories:

- Government Approved (GA)

Government approval is required for extensions of design, critical materials, variations/deviations, an "or equal" decision, equipment whose compatibility with the entire system must be checked, architectural items such as Color Charts/Patterns/Textures, and other items as designated by the COR. Within the terms of the Contract Clause entitled "Specifications and Drawings for Construction," these submittals will be acted on as "shop drawings."

- For Information Only (FIO)

Submittals not requiring Government approval will be for information only. These are items such as Installation Procedures, Certificates of compliance, Samples, Qualifications, etc. Within the terms of the Contract Clause entitled "Specifications and Drawings for Construction," these submittals will not be acted on as "shop drawings."

- Those items that can be visually inspected by the Contractor's Quality Control Representative (CQC) on site or are provided to the Government other than with an ENG Form 4025: The items that fall into this category shall remain on the register but shall not be submitted to the COR. For these items, the "Classification" column on the submittal register shall remain blank.

1.1.2 Final Submittal Register

The final submittal register shall be coordinated with the progress schedule and submitted within [40] days of Notice to Proceed. In preparing the final document, adequate time (minimum of 30 days) shall be allowed for review and approval, and possible resubmittal of each item on the register.

1.1.3 Submittal Register Updates

The Contractor's quality control representative shall review the listing at least every 30 days and take appropriate action to maintain an effective system. Copies of updated or corrected listings shall be submitted to the COR at least every 30 days in the quantity specified.

1.2 SUBMITTAL TYPES

Throughout these specifications submittals may be identified with the prefix "SD" (submittal data) followed by a number (category, i.e., data, drawings, reports, etc.). This is for bookkeeping and record sorting in the system:

SD-01 Data

Submittals which provide calculations, descriptions, or documentation regarding the work.

SD-04 Drawings

Submittals which graphically show relationship of various components of the work, schematic diagrams of systems, details of fabrication, layouts of particular elements, connections, and other relational aspects of the work.

SD-06 Instructions

Preprinted material describing installation of a product, system or material, including special notices and material safety data sheets, if any, concerning impedances, hazards, and safety precautions.

SD-07 Schedules

Tabular lists showing location, features, or other pertinent information regarding products, materials, equipment, or components to be used n the work.

SD-08 Statements

A document, required of the Contractor, or through the Contractor from a subcontractor, supplier, installer, or manufacturer to confirm the quality or orderly progression of a portion of the work by documenting procedures, acceptability of methods or personnel, qualifications, or other quality verifications.

SD-09 Reports

Reports of inspections or tests, including analyses and interpretation of test results. Each report shall be properly identified. Test methods used shall be identified and test results shall be recorded.

SD-13 Certificates

Statement signed by an official authorized to certify on behalf of the manufacturer that a product, system or material meets specified requirements. The statement must be dated after the award of this contract and state the Contractor's name and address, project and location, and list specific requirements which are being certified.

SD-14 Samples

Fabricated and/or unfabricated physical examples of materials, products, and/or units of work as complete units or as portions of units.

SD-18 Records

Documentation to record compliance with technical or administrative requirements.

SD-19 Operation and Maintenance Manuals

Data which forms a part of an operation and maintenance manual.

Submittals required by the Contract Clauses and other non-technical parts of the contract are not necessarily included in this section. These type of submittals can be added to the register before or during the submittal coordination meeting.

1.3 APPROVED SUBMITTALS

The approval of submittals by the COR shall not be construed as a complete check, but will indicate only that the general method of construction, materials, detailing and other information are satisfactory. Approval will not relieve the Contractor of the responsibility for any error which may exist. The Contractor, under the CQC requirements of this contract, is responsible for the dimensions and design of adequate connections, details, and satisfactory construction of all work. After submittals have been approved by the COR, no resubmittal for the purpose of substituting materials or equipment will be given consideration.

1.4 DISAPPROVED SUBMITTALS

The Contractor shall make all corrections required by the COR and promptly furnish a corrected submittal in the format and number of copies specified for the initial submittal. If the Contractor considers any correction indicated on the submittals to constitute a change to the contract, written notice, as required under the Contract Clause entitled "Changes," shall be given to the COR.

1.5 PAYMENT

Separate payment will not be made for submittals, and all costs associated therein shall be included in the applicable unit prices or lump sum prices contained in the schedule. Payment will not be made for any material or equipment which does not comply with contract requirements.

PART 2 PRODUCTS (Not Applicable)

PART 3 EXECUTION

3.1 GENERAL

Prior to submittal, all items shall be checked and approved by the Contractor's CQC and each item of the submittal shall be stamped, signed, and dated. Each respective transmittal form (ENG Form 4025) shall be signed and dated by the CQC certifying that the accompanying submittal complies with the contract requirements. This procedure applies to all submittals. Submittals shall include items such as: Contractor's, manufacturer's, or fabricator's drawings; descriptive literature including, but not limited to, catalog cuts, diagrams; operating charts or curves; test reports; test cylinders; samples; O&M manuals including parts lists; certifications; warranties and other such required items. Units of weights and measures used on all submittals shall be the same as the contract drawings. Each submittal shall be complete and in sufficient detail to allow ready determination of compliance with contract requirements. GA submittals shall be scheduled and made prior to the acquisition of the material or equipment covered thereby. The COR may request submittals in addition to those listed when deemed necessary to adequately describe the work covered in the respective sections. The Contractor shall maintain a complete and up-to-date file of all submittals/items on site for use by both the Contractor and the Government.

3.2 SUBMITTAL REGISTER (ENG Form 4288)

The submittal register - ENG Form 4288 – for Divisions 1 through 16 shall be developed by the Contractor prior to the submittal coordination meeting and list each item of equipment and material or data for which submittals are required in the Technical Specifications. (See paragraph SUBMITTALS at the beginning of each specification section. A blank form ENG 4288 is attached at the end of this specification section.) The Contractor shall approve all items listed on the submittal register. During the submittal coordination meeting, a preliminary submittal register will be created by annotating this Form 4288. When the final submittal register is submitted for approval, the Contractor shall complete the column entitled "Item No." and all data under "Contractor Schedule Dates" and return five completed copies to the COR for approval. The Contractor shall review the list to ensure its completeness and may expand general category listings to show individual entries for each item. The numbers in column "Item No." are to be assigned sequentially starting with "1" for each specification section. DO NOT preassign transmittal numbers when preparing the submittal register. When a conflict exists between the submittal register and a submittal requirement in the technical sections, other than those submittals referenced in Paragraph 3.9: Field Test Reports, the approved submittal register shall govern. The preliminary, and then the final approved submittal register, will become the scheduling documents and will be updated monthly and used to control submittals throughout the life of the contract. Names and titles of individuals authorized by the Contractor to approve shop drawings shall be submitted to COR with the final 4288 form. Supplier or subcontractors certifications are not acceptable as meeting this requirement.

3.3 SCHEDULING

Submittals covering component items forming a system, or items that are interrelated, shall be coordinated and submitted concurrently. Certifications shall be submitted together with other pertinent information and/or drawings. Additional processing time beyond 30 days, or number of copies, may be shown by the COR on the submittal register attached in the "Remarks" column, or may be added by the COR during the coordination meeting. No delays damages or time extensions will be allowed for time lost due to the Contractor not properly scheduling and providing submittals.

3.4 TRANSMITTAL FORM (ENG Form 4025)

Transmittal Form 4025 (sample at end of this section) shall be used for submitting both GA and FIO submittals in accordance with the instructions on the reverse side of the form. Transmittal numbers shall be assigned sequentially. Electronic generated 4025 forms shall be printed on carbonless paper and be a reasonable facsimile of the original 4025. If electronic forms are not used, the original 4025 forms shall be used (do not photo copy) and will be furnished by the COR. These forms shall be filled in completely prior to submittal. Special care shall be exercised to ensure proper listing of the specification paragraph and/or sheet number of the contract drawings pertinent to the data submitted for each item.. Each submittal item shall be listed separately on the form, naming subcontractor, supplier, or manufacturer, applicable specification paragraph number(s), drawing/sheet number, pay item number, and any other information needed to identify the item, define its use, and locate it in the work. One or more 4025 forms may be used per specification section, however, DO NOT include more than one specification section per transmittal.

3.5 CROSS-REFERENCE (ENG FORM 4288/ENG FORM 4025)

To provide a cross-reference between the approved submittal register and transmittal forms, the Contractor shall record the "transmittal numbers" assigned when submitting items in column "Transmittal No." of the

ENG FORM 4288. The item numbers in column “Item No.” of submittal register shall correspond to the item numbers on ENG Form 4025.

3.6 SUBMITTAL PROCEDURE

3.6.1 General

Shop drawings with 4025 forms shall be submitted in the number of copies specified in subparagraphs "Government Approved Submittals" and "Information Only Submittals," or as indicated on the submittal register in the “Remarks” column. Submit a complete collated “reviewers copy” with one 4025 form and attachments (not originals). The remaining copies (4 for GA, 2 for FIO) of 4025 forms and attachments shall not be collated. This would not apply to a series of drawings.

3.6.2 Approval of Submittals by the Contractor

Before submittal to the COR, the Contractor shall review and correct shop drawings prepared by subcontractors, suppliers, and itself, for completeness and compliance with plans and specifications. The Contractor shall not use red markings for correcting material to be submitted. Red markings are reserved for COR’s use. Approval by the Contractor shall be indicated on each shop drawing by an approval stamp containing information as shown in this section. Submittals not conforming to the requirements of this section will be returned to the Contractor for correction and resubmittal.

3.6.3 Variations

For submittals which include proposed variations requested by the Contractor, column “h” of ENG Form 4025 shall be checked and the submittal shall be classified as GA, and submitted accordingly. The Contractor shall set forth in writing the justification for any variations and annotate such variations on the transmittal form in the REMARKS block. Variations are not approved unless there is an advantage to the Government. The Government reserves the right to rescind inadvertent approval of submittals containing unnoted variations.

3.6.4 Drawings

Each drawing shall be not larger than A1 size (841 mm wide by 594 mm high), with a title block in lower right hand corner and a 75 mm by 100 mm (3 by 4 inch) clear area adjacent. The title block shall contain the subcontractor's or fabricator's name, contract number, description of item(s), bid item number, and a revision block. Provide a blank margin of 20 mm (3/4 inch) at bottom, 50 mm (2 inches) at left, and 10 mm (1/2 inch) at top and right. Where drawings are submitted for assemblies of more than one piece of equipment or systems of components dependent on each other for compatible characteristics, complete information shall be submitted on all such related components at the same time. The Contractor shall ensure that information is complete and that sequence of drawing submittal is such that all information is available for reviewing each drawing. Drawings for all items and equipment, of special manufacture or fabrication, shall consist of complete assembly and detail drawings. All revisions after initial submittal shall be shown by number, date, and subject in revision block.

3.6.4.1 Submittals Containing Drawings Larger than A3 size, (297 mm high by 420 mm wide)

For GA submittals containing drawings larger than A3 size, one reproducible and one blue line copy will be required to be submitted with five copies of the ENG Form 4025. The marked-up reproducible (and/or any review comments contained on the page-size comment sheet(s) at the Government's option) will be returned

to the Contractor upon review. Three copies of blue line drawings (generated from the reviewed reproducible) will be provided to the Government within 10 days of Contractor's receipt of the reviewed reproducible. The Contractor shall not incorporate approved work into the project until the Government has received the three blue line copies. The Contractor shall use the marked-up reproducible to make any additional copies as needed. For FIO submittals, one reproducible and two blue line copies will be required to be submitted with the appropriate number of copies of ENG Form 4025.

3.6.5 Printed Material

All requirements for shop drawings shall apply to catalog cuts, illustrations, printed specifications, or other data submitted, except that the 75 mm by 100 mm (3 inch by 4 inch) clear area adjacent to the title block is not mandatory. Inapplicable portions shall be marked out and applicable items such as model numbers, sizes, and accessories shall be indicated by arrow or highlighted.

3.7 SAMPLES REQUIRING LABORATORY ANALYSIS

See Section 01451 - CONTRACTOR QUALITY CONTROL for procedures and address for samples requiring Government testing.

3.8 SAMPLES REQUIRING VISUAL INSPECTION

Samples requiring only physical inspection for appearance and suitability shall be coordinated with the on-site Government quality assurance representative (QAR).

3.9 FIELD TEST REPORTS

Routine tests such as soil density, concrete deliveries, repetitive pressure testing shall be delivered to the QAR with the daily Quality Control reports. See SECTION: 01451 - CONTRACTOR QUALITY CONTROL.

3.10 CONTROL OF SUBMITTALS

The Contractor shall carefully control his procurement operations to ensure that each individual submittal is made on or before the Contractor scheduled submittal date shown on the approved "Submittal Register."

3.11 GOVERNMENT APPROVED SUBMITTALS (GA)

The Contractor shall submit 5 copies of GA submittals with 5 corresponding 4025 forms. Upon completion of GA submittal review, copies as specified below will be marked with an action code, dated, and returned to the Contractor. See “Drawings” above for special instructions if drawings larger than size A3 (11 inch by 17 inch) are used.

3.11.1 Processing of GA Submittals

Submittals will be reviewed and processed as follows:

a. Approved as Submitted (Action Code "A"): Shop drawings which can be approved without correction will be stamped "Approved" and two copies will be returned to the Contractor. No resubmittal required.

b. Approved Except as Noted (Action Code "B"): Shop drawings which have only minor discrepancies will be annotated in red to indicate necessary corrections. Marked material will be stamped "Approved Except as Noted" and two copies returned to the Contractor for correction. No resubmittal required.

c. Approved Except as Noted (Action Code "C"): Shop drawings which are incomplete or require more than minor corrections will be annotated in red to indicate necessary corrections. Marked material will be stamped "Approved Except as Noted - Resubmission Required" and two copies returned to the Contractor for correction. Resubmittal of only those items needing correction required.

d. Disapproved (Action Code "E"): Shop drawings which are fundamentally in error, cover wrong equipment or construction, or require extensive corrections, will be returned to the Contractor stamped "Disapproved." An explanation will be furnished on the submitted material or on ENG Form 4025 indicating reason for disapproval. Complete resubmittal required.

e. Resubmittal will not be required for shop drawings stamped "A" or "B" unless subsequent changes are made by Contractor or a contract modification. For shop drawings stamped "C" or "E," Contractor shall make corrections required, note any changes by dating the revisions to correspond with the change request date, and promptly resubmit the corrected material. Resubmittals shall be associated with the “parent” by use of sequential alpha characters (for example, resubmittal of transmittal 8 will be 8A, 8B, etc). Government costs incurred after the first resubmittal may be charged to the Contractor.

3.12 INFORMATION ONLY SUBMITTALS (FIO)

The Contractor shall submit three copies of data and four copies of ENG Form 4025. FIO submittals will not be returned. Government approval is not required on FIO submittals. These submittals will be used for information purposes. The Government reserves the right to require the Contractor to resubmit any item found not to comply with the Contract. This does not relieve the Contractor from the obligation to furnish material conforming to the plans and specifications and will not prevent the COR from requiring removal and replacement if nonconforming material is incorporated in the work. This does not relieve the Contractor of the requirement to furnish samples for testing by the Government laboratory or check testing by the Government in those instances where the technical specifications so prescribe.

3.12.1 Processing of FIO Submittals

FIO submittals shall be submitted prior to delivery of the material or equipment to the job site. ENG Form 4025 shall be marked with the words "contractor approved - information copy only" in the REMARKS block of the form. Submittals will be monitored and spot checks made. When such checks indicate noncompliance, the Contractor will be notified by the same method used for GA submittals. Resubmittal of nonconforming FIO submittals shall be reclassified GA and shall be in five copies.

3.13 CONTRACTOR APPROVAL STAMP

The stamp used by the Contractor on the submittal data to certify that the submittal meets contract requirements shall be similar to the following:

CONTRACTOR:
_____
CONTRACT NUMBER
_____

TRANSMITTAL NUMBER _____
ITEM NUMBER _____
SPECIFICATION SECTION _____
PARAGRAPH NUMBER _____
_____ APPROVED AS SUBMITTED
_____ APPROVED WITH CORRECTIONS AS NOTED

SIGNATURE: _____
TITLE: _____
DATE _____

CONTRACTORS REVIEW STAMP

MAXIMUM SIZE:

3 INCHES BY 3 INCHES

TRANSMITTAL OF SHOP DRAWINGS, EQUIPMENT DATA, MATERIAL SAMPLES, OR MANUFACTURER'S CERTIFICATES OF COMPLIANCE *(Read instructions on the reverse side prior to initiating this form)*	DATE	TRANSMITTAL NO.

SECTION I - REQUEST FOR APPROVAL OF THE FOLLOWING ITEMS *(This section will be initiated by the contractor)*

TO:	FROM:	CONTRACT NO.	CHECK ONE: ☐ THIS IS A NEW TRANSMITTAL ☐ THIS IS A RESUBMITTAL OF TRANSMITT/_____
SPECIFICATION SEC. NO. *(Cover only one section with each transmittal)*	PROJECT TITLE AND LOCATION		CHECK ONE: THIS TRANSMITTAL IS FOR ☐ FIO ☐ GOV'T. APPROVAL

ITEM NO. *a.*	DESCRIPTION OF ITEM SUBMITTED *(Type size, model number/etc.)* *b.*	MFG OR CONTR. CAT., CURVE DRAWING OR BROCHURE NO. *(See instruction no. 8)* *c.*	NO. OF COPIES *d.*	CONTRACT REFERENCE DOCUMENT: SPEC. PARA. NO. *e.*	CONTRACT REFERENCE DOCUMENT: DRAWING SHEET NO. *f.*	FOR CONTRACTOR USE CODE *g.*	VARIATION *(See instruction No. 8)* *h.*	FOR CE USE CODE *i.*

REMARKS

I certify that the above submitted items have been reviewed in detail and are correct and in strict conformance with the contract drawings and specifications except as otherwise stated.

_____
NAME AND SIGNATURE OF CONTRACTOR

SECTION II - APPROVAL ACTION

ENCLOSURES RETURNED *(List by Item No.)*	NAME, TITLE AND SIGNATURE OF APPROVING AUTHORITY	DATE

ENG FORM 4025-R, MAR 95 *(ER 415-1-10)* EDITION OF SEP 93 IS OBSOLETE. SHEET ___ OF ___ (Reverse) CEMPCD

INSTRUCTIONS

1. Section I will be initiated by the Contractor in the required number of copies.

2. Each transmittal shall be numbered consecutively in the space provided for "Transmittal No.". This number, in addition to the contract number, will form a serial number for identifying each submittal. For new submittals or resubmittals mark the appropriate box; on resubmittals, insert transmittal number of last submission as well as the new submittal number.

3. The "Item No." will be the same "Item No." as indicated on ENG FORM 4288-R for each entry on this form.

4. Submittals requiring expeditious handling will be submitted on a separate form.

5. Separate transmittal form will be used for submittals under separate sections of the specifications.

6. A check shall be placed in the "Variation" column when a submittal is not in accordance with the plans and specifications--also, a written statement to that effect shall be included in the space provided for "Remarks".

7. Form is self-transmittal, letter of transmittal is not required.

8. When a sample of material or Manufacturer's Certificate of Compliance is transmitted, indicate "Sample" or "Certificate" in column c, Section I.

9. U.S. Army Corps of Engineers approving authority will assign action codes as indicated below in space provided in Section I, column i to each item submitted. In addition they will ensure enclosures are indicated and attached to the form prior to return to the contractor. The Contractor will assign action codes as indicated below in Section I, column g, to each item submitted.

THE FOLLOWING ACTION CODES ARE GIVEN TO ITEMS SUBMITTED

A	--	Approved as submitted.	E	--	Disapproved (See attached).
B	--	Approved, except as noted on drawings.	F	--	Receipt acknowledged.
C	--	Approved, except as noted on drawings. Refer to attached sheet resubmission required.	FX	--	Receipt acknowledged, does not comply as noted with contract requirements.
D	--	Will be returned by separate correspondence.	G	--	Other *(Specify)*

10. Approval of items does not relieve the contractor from complying with all the requirements of the contract plans and specifications.

(Reverse of ENG Form 4025-R)

SUBMITTAL REGISTER

(ER 415-1-10)

CONTRACT NUMBER

TITLE AND LOCATION: (99017) ATHLETIC COMPLEX, NORTH FORT LEWIS, WASHINGTON

CONTRACTOR

SPECIFICATION SECTION

				TYPE OF SUBMITTAL									CLASSIFICATION			CONTRACTOR SCHEDULE DATES			CONTRACTOR ACTION			GOVERNMENT ACTION		
TRANSMITTAL NO	ITEM NO	SPECIFICATION PARAGRAPH NUMBER	DESCRIPTION OF ITEM SUBMITTED	DATA	DRAWINGS	INSTRUCTIONS	SCHEDULES	STATEMENTS	REPORTS	CERTIFICATES	SAMPLES	RECORDS	INFORMATION ONLY	GOVERNMENT APPROVED	REVIEWER	SUBMIT	APPROVAL NEEDED BY	MATERIAL NEEDED BY	CODE	DATE	SUBMIT TO GOVERNMENT	CODE	DATE	REMARKS
a.	b.	c.	d.	e.	f.	g.	h.	i.	j.	k.	l.	m.	n.	o.	p.	q.	r.	s.	t.	u.	v.	w.	x.	y.

ENG FORM 4288, MAY 91

EDITION OF AUG 89 IS OBSOLETE

PAGE__ OF __ PAGES

This page intentionally blank

SECTION 01410

ENVIRONMENTAL PROTECTION

PART 1 GENERAL REQUIREMENTS

1.1 The contractor shall perform the work minimizing environmental pollution and damage as the result of construction operations under this contract. For the purpose of this specification, environmental pollution and damage is defined as the presence of chemical, physical, or biological elements or agents which adversely affect human health or welfare; unfavorably alter ecological balances of importance to human life; affect other species of importance to humankind; or degrade the utility of the environment for aesthetic, cultural, and/or historical purposes. The control of environmental pollution and damage requires consideration of air, water, and land, and includes management of visual esthetics, noise, solid waste, and erosion from stormwater, as well as pollutants.

1.2 Abbreviations and Acronyms:

BACT	Best Available Control Technology
BMP	Best Management Practice
CFR	Code of Federal Regulations
CO	Contracting Officer
COR	Contracting Officer's Representative
DOT	Department of Transportation
ECMD	Engineering & Contract Management Division
ECO	Environmental Compliance Officer
ENRD	Environmental and Natural Resources Division
EPA	Environmental Protection Agency
HM	Hazardous Material
HMTA	Hazardous Materials Transportation Act
HW	Hazardous Waste
HWT	Hazardous Waste Technician
HWMS	Hazardous Waste Management Section
ISCP	Installation Spill Contingency Plan

MSDS Material Safety Data Sheets

NFPA National Fire Protection Association

NPDES National Pollutant Discharge Elimination System

NOI Notice of Intent

OSHA Occupational Safety and Health Act

PCB Polychlorinated Biphenyls

PCS Petroleum Contaminated Soil

PPE Personnel Protective Equipment

PW Public Works

PSAPCA Puget Sound Air Pollution Control Agency

RUL Restricted Use List

SPCCP Spill Prevention, Control and Countermeasures Plan

TPCHD Tacoma Pierce County Health Department

WAC Washington Administrative Code

WHPA Well Head Protection Area

WISHA Washington Industrial Safety and Health Act

YTC Yakima Training Center

1.3 Protection of Environmental Resources

The environmental resources within the project boundaries and those affected outside the limits of work under this contract shall be protected during the entire period of this contract. The Contractor shall confine his activities to areas defined by the drawings and specifications.

1.4 Subcontractors

The Contractor shall ensure compliance with this section by all subcontractors.

1.5 Laws and Regulations

The Contractor shall comply with all applicable Federal, State, and Local environmental, natural and cultural resources, and historic preservation laws and regulations. Specific attention is directed to Fort

Lewis Regulation No. 200-1 "Environmental Protection and Enhancement". These specifications supplement these laws and regulations.

1.6 Coordination

The Environmental and Natural Resources Division (ENRD) of PW coordinates most environmental concerns at Fort Lewis and its sub-installations. Division, Roads and Sanitation Branch of PW. The Contractor shall make contact with them through PW, Engineering & Contract Management Division.

1.7 Submittals

Government approval is required for all submittals with a “GA” designation; submittals having an “FIO”designation are for information only. The following shall be submitted in accordance with section 01330 SUBMITTAL PROCEDURES.

The following is a summary of required submittals. Complete details and schedules are described in the rest of the section.

Environmental Protection Plan, GA

The Contractor shall submit an environmental protection plan within 15 days after receipt of the notice to proceed. Approval of the Contractor’s plan will not relieve the Contractor of responsibility for adequate and continuing control of pollutants and other environmental protection measures. The environmental protection plan shall include, but not be limited to, the following:

a. A list of Federal, State, and local laws, regulations, and permits concerning environmental protection, pollution control and abatement that are applicable to the Contractor's proposed operations and the requirements imposed by those laws, regulations, and permits.

b. Methods for protection of features to be preserved within authorized work areas like trees, shrubs, vines, grasses and ground cover, landscape features, air and water quality, fish and wildlife, soil, historical, archaeological, and cultural resources.

c. Procedures to be implemented to provide the required environmental protection, to comply with the applicable laws and regulations, and to correct pollution due to accident, natural causes, or failure to follow the procedures of the environmental protection plan.

d. Location of the permitted solid waste disposal facility to be used.

e. Drawings showing locations of any proposed temporary material storage areas, structures, sanitary facilities, and stockpiles of excess or spoil materials.

f. Environmental monitoring plans for the job site, including land, water, air, and noise monitoring.

g. Plan showing the proposed activity in each portion of the work area and identifying the areas of limited use or nonuse. Plan should include measures for marking the limits of use areas.

h. Applicable environmental training (both formal and on the job) the Contractor's personnel have received prior to the construction period.

Hazardous Materials and Hazardous Wastes, FIO

Hazardous Materials Inventory Form (Initial and ongoing)
Material Safety Data Sheets (MSDS)
Hazardous Waste Profile Sheets
Hazardous Waste Accumulation Log
Hazardous Waste Manifest
PCB Transformer Certification and Information

Asbestos

Permits and any amendments, FIO
Management Plan, GA
Removal Summary, FIO
Bulk Sample Results, FIO
Air Monitoring Sample Results (Pre-abatement, area, clearance, and personnel), FIO
Jobsite Entry Logs, FIO
Waste Shipment Record, FIO
Summary of Asbestos Removed and Remaining, FIO
90 Day Waste Storage Facility Permits
(if applicable), FIO

PART 2 PRODUCTS (Not Used)

PART 3 EXECUTION

3.1 WORK AREA LIMITS

The Contractor shall confine all activities to areas defined by the design drawings and specifications. Prior to any construction, the Contractor shall mark the areas that will not be disturbed under this contract. Isolated areas within the general work area, which are to be saved and protected, shall also be marked or fenced. Monuments and markers shall be protected before construction operations commence. Where construction operations are to be conducted during darkness, the markers shall be visible. The Contractor's personnel shall be knowledgeable of the purpose for marking and/or protecting particular objects.

3.1.1 Contractor Facilities and Work Areas

The Contractor's field offices, staging areas, stockpile storage, and temporary buildings shall be placed in areas designated on the drawings or as directed by the Contracting Officer or their representative. Temporary movement or relocation of Contractor facilities shall be made only when approved by the Contracting Officer or their representative.

3.2 MANAGEMENT OF HAZARDOUS MATERIALS AND HAZARDOUS WASTE

3.2.1 GENERAL

3.2.1.1 Definitions

a. Hazardous material (HM): A useful product that requires special management because it has hazardous characteristics (ignitability, corrosivity, reactivity, or toxicity) that could pose dangers to human health or the environment. A HM becomes a Hazardous Waste when it can no longer be used for its intended purpose.

b. Hazardous waste (HW): A discarded material with properties that could pose dangers to human health or the environment. A HW either exhibits a hazardous characteristic (ignitability, corrosivity, reactivity, or toxicity) or is specifically listed as a HW by the EPA or by the State.

c. Material Safety Data Sheet (MSDS): A document containing information that manufacturers are required by law to provide on all products they manufacture and sell. The MSDS is useful in evaluating the product to determine if it has hazardous constituents and the type of medical treatment in case of an accident.

3.2.1.2 Hazardous Waste Management Section (HWMS)

The Contractor shall contact the HWMS at (253) 967-4786 with any questions pertaining to the storage, use, and disposal of Hazardous Materials and/or Hazardous Waste during the execution of this contract.

3.2.1.3 Restricted Use Materials

Certain chemicals are restricted from use on Fort Lewis. These chemicals are listed on the Restricted Use List (RUL). The RUL is maintained by the PW Environmental and Natural Resources Division (ENRD) and is updated semi-annually. A print out and/or an electronic copy of the entire RUL is available from ENRD, Building 1210. The Contractor shall receive authorization from the Contracting Officer or their representative prior to using any product that contains chemicals listed on the RUL. Only materials necessary for and associated with the execution of this Contract will be allowed on Government property.

3.2.1.4 Contingency Planning and Spill Response

The Contractor shall comply with the provisions of the Fort Lewis Spill Prevention, Control and Countermeasures Plan (SPCCP) and the Installation Spill Contingency Plan (ISCP). The PW ENRD maintains these plans. The Contractor shall also maintain on site a written contingency plan for HW accumulation and HM storage areas if the work associated with this contract generates HW or require storage of HM.

3.2.1.5 Transportation of HM and HW

The Contractor shall comply with all Department of Transportation (DOT) requirements associated with HM/HW, including proper container marking/labeling and vehicle placarding when transporting HM/HW on or off the installation. The Contractor shall obtain Government approval prior to removal of any HW from the installation. Removal shall only be done by an authorized HW transporter having an EPA Identification Number and with the HW recorded on a Uniform Hazardous Waste Manifest (EPA Form 8700-22).

3.2.1.6 HM/HW Personnel and Training Requirements

The Contractor shall appoint an Environmental Compliance Officer (ECO) and a Hazardous Waste Technician (HWT) in writing, if the work associated with this contract causes the Contractor to generate,

store, or handle HM/HW. The ECO/HWT shall be responsible for insuring the requirements of this specification are met.

The Contractor shall insure that all personnel are trained in accordance with Washington Department of Ecology regulations before being assigned to any position handling HW/HM. This training shall include, but not be limited to:

a. Hazardous Materials Use, Storage and Disposal Training Course for ECOs/HWTs. The 8 hour course is available weekly from the Fort Lewis ENRD Hazardous Waste Management Section (HWMS) and shall be taken prior to the Contractor generating, storing, or handling HM or HW on the installation. The Contractor shall contact the HWMS to schedule attendance.

b. First Responder Awareness Level as specified in the ISCP.

c. Quarterly contingency plan review and rehearsal.

d. Hazard Communication training as stated in paragraph 3.2.2.5.

The Contractor shall maintain a record of all required training, and the date conducted, for each individual requiring training and shall make this record available to the Government at all times during the execution of this contract.

3.2.2 HAZARDOUS MATERIALS

3.2.2.1 Notification

The Contractor shall provide an initial inventory and MSDS copies for all HM to be used during the execution of this contract, to the PW, Engineering & Contract Management Division. The inventory shall include the type of HM, proposed storage location and quantity to be stored and shall be provided before bringing any HM onto the installation. The Contractor shall use the Hazardous Material Inventory form (HFL Form 953-attached at the end of this specification) or a Contractor-generated form providing the same information. An electronic version of the Hazardous Material Inventory form is available from the PW ENRD in Building 1210.

3.2.2.2 Storage Facilities

Facilities shall meet all fire code requirements and provide adequate ventilation, containment, and protection from the elements. Provide warning signs, limit access to the facility, and lock it when it is unattended. Only HM shall be stored in the facility. Contractor vehicles are not considered a proper storage facility. No HM shall be stored in vehicles overnight or for any length of time.

3.2.2.3 Storage and Use

The Contractor shall store HM according to product labels and MSDS requirements. Non-compatible materials shall not be stored together. All containers shall be properly labeled as to contents and kept in good condition with tight fitting lids. Unopened containers shall be segregated from opened containers. Personal protective equipment (PPE) required by the MSDS or product label shall be available and worn by all personnel who handle the product.

3.2.2.4 Inspections, Record Keeping and Reporting

The Contractor shall perform weekly inspections of their HM storage facilities utilizing the HM Inspection Checklist (HFL Form 951-attached). A current inventory of the HM storage facility shall be maintained on site and a copy forwarded to PW, Engineering & Contract Management Division quarterly using the Hazardous Material Inventory form. Additionally, a current MSDS for each product used or stored shall be present and on file at the site where the product is used or stored.

3.2.2.5 Hazard Communication Program

The Contractor shall have a written Hazard Communication program, which explains how personnel are informed and trained concerning HM in the workplace as required by Federal, state and Fort Lewis regulations. The written program shall be located at a hazard communication station that is accessible to all Contractor personnel and shall contain the following sections:

a. A current inventory of HM, who is responsible for classifying a product as a HM, and how the inventory is updated.

b. Labels and other forms of warning: This section shall describe the procedure for insuring that each HM container is clearly labeled and has the appropriate warnings. The section also states who is responsible for labeling requirements and how label information is updated.

c. MSDS file: The location of the MSDS file, who maintains the file, and how personnel may access the file, shall be described. This section shall also describe what is done when a product is received without the MSDS and how the MSDS file is updated.

d. Personnel training and information: This section shall describe initial and refresher training provided to personnel concerning the hazards of the HM in the workplace, the training provided, and who conducts the training.

e. Information to non-Contractor personnel: This section shall describe how non-Contractor personnel are informed about possible hazards, where MSDS copies can be obtained, and what PPE is required in the workplace.

3.2.3 HAZARDOUS WASTE

3.2.3.1 Identification

The Contractor shall identify all HW generated during the execution of this contract. The Contractor shall completely characterize the waste stream to identify the waste constituents. Each waste stream identity shall be recorded on a Hazardous Waste Profile Sheet (HWPS) and submitted to PW, Engineering & Contract Management Division for approval prior to waste generation. Profile sheets are available from the HWMS or Contractor generated equivalent sheets may be used. The Contractor is responsible for any costs associated with laboratory analysis to verify the waste stream identity if it is not obviously evident.

3.2.3.2 Accumulation

HW shall be accumulated in waste-compatible, sturdy, leak-proof, closed containers that are Department of Transportation (DOT) approved. If the waste is to be disposed of on Fort Lewis, [YTC and Vancouver Barracks], the Contractor shall accumulate wastes only in Government issued HW containers.
Each HW container shall be clearly labeled with the words HAZARDOUS WASTE, a description of the waste, and the hazard associated description or label. Any container issued by the HWMS at Fort Lewis or the Directorate of Environment & Natural Resources at YTC shall have a Bar-coded label that contains all necessary labeling information. This label can be obtained by contacting the HWMS.

3.2.3.3 Container Management

HW shall be handled in a manner that prevents leaks, spills, fires, and explosions. Container tops and/or bungs shall be serviceable and tightly installed (wrench tight) at all times except when adding material to the container (material should not spill if the container tips over). Containers shall be properly grounded when transferring flammable materials. Containers holding flammable liquids (flash point less than 140 degrees F) shall be grounded. Reactive and ignitable waste containers shall be stored in a manner compatible with NFPA Fire Code requirements. Incompatible wastes shall not be accumulated in the same container or in the same area.

The container accumulation area shall be 50 feet from any other occupied building, shall have overhead cover, and shall be capable of being secured. Access to the area shall be restricted to trained personnel who need to be in and use the area. The site shall be locked when not in use. The container accumulation area shall have a secondary containment system capable of collecting and holding spills and leaks. It shall be sized to hold 110% of the volume of the largest container. A minimum of thirty inches of aisle space shall be maintained between container rows. Container markings and labels shall be clearly visible.

3.2.3.4 Inspection, Record Keeping and Reporting

The Contractor shall inspect each accumulation point weekly, utilizing the attached Hazardous Waste Accumulation Areas checklist, (HFL Form 950-attached) to verify compliance with the above requirements. The checklist shall be available on site for inspection.

3.2.3.5 Transportation and Disposal

The Contractor shall be responsible for the transportation and disposal off site of all HW generated from the execution of this contract, unless stated otherwise in this specification.

The Contractor or his representative, who provides services that generate, prepare for shipment or transports hazardous waste or provides hazardous waste clean-up/disposal services, shall be responsible for preparing EPA Form 8700-22, Uniform Hazardous Waste Manifest, for the state to which the material is being transported. The Contractor shall comply with all manifest and record keeping and reporting requirements. Specific manifesting procedures include:

a. The Uniform Hazardous Waste Manifest will <u>only</u> be signed by personnel in the HWMS at Building 1210 on Fort Lewis. At Yakima Training Center, it will be signed by the Director of Environmental and Natural Resources, and at Vancouver Barracks, by the Environmental Compliance Officer.

b. The Contractor shall provide a copy of the Uniform Hazardous Waste Manifest and supporting documentation (i.e., waste profile and land ban as appropriate) no less than 72 hours in advance of the proposed transporter pick up date.

c. The Contractor shall coordinate and schedule transportation pick up dates and times by contacting the HWMS at (253) 967-4786 or 3268. This will ensure qualified individuals are available for the certification/signature of the manifest and other related documentation. A waste profile (land ban when required) must accompany the manifest to verify description of material being transported.

The Contractor shall be responsible for verifying that the shipment is properly identified (profiled), packaged, marked, labeled, and not leaking. The Contractor shall apply appropriate placards to his vehicle while transporting hazardous materials/waste.

The Contractor shall insure that the transporter and disposal facility have a valid Environmental Protection Agency identification number for the applicable hazardous waste services, i.e., transportation, treatment, storage, or disposal.
The Contractor shall ensure that the transporter drivers have current DOT combination licenses. The Contractor shall ensure that the carrier has instructed and trained personnel concerning the applicable Hazardous Materials Transportation Act (HMTA) regulations relevant to their job functions.

The Contractor or his representatives shall take appropriate action (including cleanup) in the event of a release/spill. If a release/spill occurs on Fort Lewis the Contractor shall immediately notify the Fort Lewis Fire Department (Dial 911). Secondary notification shall be made to (253) 967-4786 or 3268.

The Contractor shall ensure the transporter and disposal facility has liability insurance in effect for claims arising out of death or bodily injury and property damage from hazardous material/waste transport, treatment, storage, and disposal, including vehicle liability and legal defense costs in the amount of $1,000,000.00, as evidenced by a certificate of insurance for General, Automobile, and Environmental Liability Coverage.

3.4 ASBESTOS

See specification SECTION 13280 – ASBESTOS ABATEMENT.

3.4.1 All asbestos permit applications must indicate the building number and street name of the project site. If a permit application has multiple buildings included on it, all the building numbers and street names must be included. The Contractor shall indicate the following address on the permit application under property owner: PUBLIC WORKS, ATTN: AFZH-PWE, MS 17E, BOX 339500, FORT LEWIS, WA, 98433-9500.

3.5 Radiation Safety

All aspects of the job relating to radiation safety, including transportation, use, storage or handling must be addressed by the Contractor through PW, Engineering & Contract Management Division to the Installation Radiation Safety Officer, Installation Safety Office, Building 6069, Fort Lewis, WA, phone: (253) 967-3079/6764.

3.8 DISPOSAL OF SOLID WASTE.

3.8.1 General

The Contractor shall be responsible for the disposal off site of all refuse generated in the course of performance of this contract, to include containers, transport, handling, and dumping fees. All solid wastes shall be placed in containers that are emptied on a regular schedule. The Contractor will not be permitted to deposit refuse in existing garbage cans or refuse dumpsters. No burning of refuse is allowed. All vehicle loads of waste being transported shall be adequately secured to prevent spillage.

3.8.2 Clean Fill Materials

Clean fill materials shall be disposed of on Fort Lewis at a site as directed by PW, Engineering & Contract Management Division. Clean fill shall not contain any items such as vegetative material, asphalt, concrete or metals.

3.9 PROTECTION OF LAND RESOURCES

Prior to the beginning of any construction, the Contractor shall identify the land resources to be preserved within the work area. Except in areas indicated on the drawings or specified to be cleared, the Contractor shall not remove, cut, deface, injure, or destroy land resources including trees, shrubs, vines, grasses, topsoil, and land forms without special permission from the Contracting Officer or their representative. No ropes, cables, or guys shall be fastened to or attached to any trees for anchorage unless specifically authorized.

3.9.1 Landscape

Trees, shrubs, vines, grasses, land forms and other landscape features indicated and defined on the drawings to be preserved shall be clearly identified by marking, fencing, or wrapping with boards, or any other approved techniques.

3.9.2 Unprotected Erodible Soils

Earthwork brought to final grade shall be finished as indicated on the design drawings and specifications. Side slopes and back slopes shall be protected as soon as practicable upon completion of rough grading. All earthwork shall be planned and conducted to minimize the duration of exposure of unprotected soils. Except in cases where the constructed feature obscures borrow areas, quarries, and waste material areas, these areas shall not initially be totally cleared. Clearing of such areas shall progress in reasonably sized increments as needed to use the developed areas as approved by the Contracting Officer or their representative.

3.9.3 Disturbed Areas

The Contractor shall effectively prevent erosion and control sedimentation through approved methods including, but not limited to, the following:

a. Retardation and control of runoff. Runoff from the construction site or from storms shall be controlled, retarded, and diverted to protected drainage courses by means of diversion ditches, benches, berms, and by any measures required by area wide plans under the Clean Water Act.

b. Erosion and sedimentation control devices. The Contractor shall construct or install temporary

and permanent erosion and sedimentation control features as indicated on the drawings. Berms, dikes, drains, sedimentation basins, grassing, and mulching shall be maintained until permanent drainage and erosion control facilities are completed and operative.

c. Sediment basins. Sediment from construction areas shall be trapped in temporary or permanent sediment basins in accordance with the drawings.

The basins shall accommodate the runoff of a local 5 year, 24 hour storm. After each storm, the basins shall be pumped dry and accumulated sediment shall be removed to maintain basin effectiveness. Overflow shall be controlled by paved weirs or by vertical overflow pipes. The collected topsoil sediment shall be reused for fill on the construction site, and/or stockpiled for use at another site. The Contractor shall institute effluent quality monitoring programs as required by State and local environmental agencies.

3.9.4 Tree Protection

The Contractor shall exercise care when excavating trenches in the vicinity of trees. Where roots are two inches in diameter or greater, the trench shall be excavated by hand or tunneled. When large roots are exposed, they shall be wrapped with heavy burlap for protection and to prevent drying. Trenches dug by machines adjacent to trees having roots less than two inches in diameter shall have the sides hand trimmed, making a clean cut of the roots. Trenches having exposed tree roots shall be backfilled within 24 hours unless adequately protected by moist burlap or canvas.

3.9.5 Trees Removed During Construction

Logs from trees removed during construction shall be decked for subsequent disposal by the Government. Decks shall be located so as not to interfere with the construction work and shall be located as directed by PW, Engineering & Contract Management Division. Logs shall be sorted by size and placed in separate decks for sawlogs and fuelwood. Trees shall be cut from the stump and limbed to the top before decking. Whenever possible logs shall be left in tree length. If trees are too large to be handled tree length, cut 40-foot logs plus 12 inches trim allowance from the butt. The minimum size for a sawlog is 6 diameter inches on the small end and 16 foot in length. All logs not suitable for sawlogs shall be placed in a fuelwood deck. The minimum size for a fuelwood log is 5 inches diameter on the large end and 8 feet in length.

3.9.6 Restoration of Landscape Damage

All landscape features (vegetation - such as trees, plants, and grass) damaged or destroyed during Contractor operations outside and within the work areas shall be restored by the Contractor to a condition similar to that which existed prior to construction activities unless otherwise indicated on the drawings or in the specifications. All vegetation that was removed or damaged consisting of native species shall be replaced with native species. If the area had been previously landscaped with non-native species then similar plants shall be used for replacement. Landscaping shall be maintained for a minimum of 60 days after planting, to include irrigation. The Contractor shall coordinate with ENRD prior to planting any non-native species.

Trees shall be replaced in kind with a minimum 4-inch caliper nursery stock. Shrubs, vines, and ground cover shall be replaced in kind; the Contracting Officer or their representative shall approve size. All plant material shall meet specifications outlined in ANSI Z60.1 - current publication, "American Standard for Nursery Stock."

Grass areas shall be replaced in kind by sodding or seeding. Sod shall be required in all regularly maintained lawn areas. See specification SECTION 02922 – SODDING.

Plant material damaged or destroyed within the historical district shall be replaced or repaired as directed by the Contracting Officer or their representative.

3.10 PROTECTION OF WATER RESOURCES

3.10.1 General

The Contractor shall keep construction activities under surveillance, management, and control to avoid pollution of surface and ground waters. Toxic or hazardous chemicals shall not be applied to soil or vegetation when such application may cause contamination of the fresh water reserve. Monitoring of water areas affected by construction shall be the Contractor's responsibility. The Contractor shall monitor all water areas affected by construction activities. The Contractor shall observe all prescribed setbacks from streams and wetlands as specified in FL REG 200-1.

3.10.2 Cofferdam and Diversion Operations

Construction operations for dewatering, removal of cofferdams, tailrace excavation, and tunnel closure shall be controlled at all times to limit the impact of water turbidity on the habitat for wildlife and on water quality for downstream use.

3.10.3 Stream Crossings

Stream crossings shall allow movement of materials or equipment without violating water pollution control standards of the Federal, State or local government.

3.10.4 Fish and Wildlife

The Contractor shall minimize interference with, disturbance to, and damage of fish and wildlife. The Contractor prior to beginning of construction operations shall list species that require specific attention along with measures for their protection.

3.10.5 Wellhead Protection Areas

Particular care shall be taken to prevent the introduction of any contaminant to the surface in a designated Wellhead Protection Area (WPA). Certain activities that may pose a danger to groundwater resources are prohibited within WPAs.

3.10.6 Construction Stormwater Permit

The National Pollutant Discharge Elimination System (NPDES), requires general permits, a notice of intent, and a notice of discontinuation for construction sites greater than 5 acres discharging stormwater to any waters of the United States. The Contractor shall file a Notice of Intent with the EPA for coverage under the EPA's general permit for storm water discharges from construction activities. A copy of the NOI shall be submitted to PW, Engineering & Contract Management Division. The Contractor shall be responsible for compliance with the terms of the permit, including the development of a storm water pollution prevention plan.

3.11 PROTECTION OF AIR RESOURCES

3.11.1 General

Dust particles, aerosols, and gaseous byproducts from construction activities, processing, and preparation of materials shall be controlled at all times, including weekends, holidays, and hours when work is not in progress. Hydrocarbons and carbon monoxide emissions from equipment shall be controlled to Federal and state allowable limits at all times. The Contractor shall not conceal or mask the emission of an air pollutant which violates air pollution regulations or causes a detriment to the health, safety, or welfare of any person.

An air pollution source shall not emit air pollutants in such quantities and of such characteristics and duration which are likely to be injurious to human health, plant or animal life, property, or which unreasonably interfere with enjoyment of life and property.

3.11.2 Fugitive Dust

Fugitive dust created as a result of construction activities shall be controlled with the BACT such as spraying with water. Contractor vehicles shall not enter public roadways with deposits of mud, dirt, or other debris or unsecured loads. Fugitive dust shall not be emitted from air pollution generating equipment such as boilers and incinerators.

3.11.3 Painting Operations

Spray painting shall not be conducted except inside a paint booth, which utilizes a dry filter system and is approved by ENRD for use. This requirement does not apply to the use of hand-held aerosol cans, coating of buildings and similar type structures, and painting of other items which ENRD deems can not be sprayed in a paint booth.

3.11.4 Burning Natural Vegetation

All cantonment areas, housing areas and all of North Fort are designated as no burn areas. A burning permit is required for burning natural vegetation in all other areas on Fort Lewis. Burning permits may be obtained from the PW Forestry Section. A copy of the permit shall be submitted to PW, Engineering & Contract Management Division.

3.11.5 Best Available Control Technology (BACT)

The Contractor shall utilize the BACT as determined by the regulatory authority on all air pollution sources. The Contracting Officer or their representative shall be notified for resolution if this requires a change in the design.

3.12 PRESERVATION OF HISTORICAL, CULTURAL, AND ARCHEOLOGICAL RESOURCES

If, during construction activities, the Contractor observes items that might have historical or archeological significance, the Contractor shall immediately contact the Contracting Officer or their representative and shall cease all activities that may result in the destruction of these resources and shall prevent its employees from trespassing on, removing, or otherwise damaging such resources.

AFZH-DEQ
Procedures for Hazardous Material Inventory

HAZARDOUS MATERIAL INVENTORY

POC:
UNIT:
DODAC: *UIC:* *BLDG#:*
ENRD FILE #

OFFICE CODE:
PHONE:
DATE:

#	MSDS	ITEM NAME	NSN	MANUFACTURER	Container Size/Type			On Hand	Received (+)	Issued (-)	Down Graded to Waste (-)	Balance
1												
2												
3												
4												
5												
6												
7												
8												
9												
10												
11												
12												
13												
14												
15												
16												
17												
18												

Storage Location/Comments:

HFL *FORM* **953, 1 NOV 96**

Signature

UNIT/ACTIVITY: _____ **BUILDING NUMBER:** _____ **DATE:** _____

HAZARDOUS WASTE ACCUMULATION AREA CHECKLIST

	GO	NO GO	COMMENTS
1. Are all HW containers within a Fort Lewis approved HW accumulation facility or meet facility requirements listed in Appendix G, FL Reg 200-1?	____	____	_____
2. Are only Fort Lewis or subinstallation issued HW containers used?	____	____	_____
3. Do containers have the Fort Lewis or subinstallation issued bar code label, or meet HW labeling requirements?	____	____	_____
4. Are containers positioned so labels can be easily read?	____	____	_____
5. Are containers free from leaks, excessive rust, damage, or excessive spillage/residue on the outside of the container? Are leaks into secondary containment cleaned up?	____	____	_____
6. Has any HW container exceeded its turn-in date?	____	____	_____
7. Are container lids (bungs) properly installed and (wrench) tight to prevent leakage if the container is overturned?	____	____	_____
8. When stored together, do incompatibles, flammables, corrosives, or oxidizers have physical barriers to prevent mixing?	____	____	_____
9. Are drums containing flammables properly grounded?	____	____	_____
10. Is there a minimum thirty-inch separation between aisles of containers, and are rows of drums no more than two wide?	____	____	_____
11. Is the HW segregated from new material?	____	____	_____
12. Is there a functioning emergency alarm at the facility?	____	____	_____
13. Have HM storage areas been inspected to verify there are no spills, damaged or leaking containers, expired shelf life items, or unsafe storage?	____	____	_____

INSPECTOR: _____ **SIGNATURE:** _____

UNIT/ACTIVITY: _____ **BUILDING NUMBER:** _____ **DATE:** _____

HAZARDOUS MATERIAL INSPECTION CHECKLIST

This checklist will be used for inspecting facilities where hazardous materials (HM) are stored. These locations include supply rooms, motor pools, paint lockers, field sanitation boxes, NBC rooms, communication sections, warehouses, laboratories, shops, or any other sites where HM are stored.

	GO	NO GO	COMMENTS
1. Are HM stored in a Fort Lewis approved facility or meet facility requirements in Appendix F, FL Reg 200-1?	____	____	_____
2. Are incompatible materials segregated, e.g., corrosives and oxidizers segregated from flammable products and stored on ground level? (See storage incompatibility charts in Appendix F, FL Reg 200-1)	____	____	_____
3. Are flammables stored away from sources of heat, ignition, flames, or sparks?	____	____	_____
4. Are inventories of HM recorded and updated as required by AR 710-2?	____	____	_____
5. Are MSDSs available on-site for all HM stored?	____	____	_____
6. Is a spill plan posted, and is a fully stocked spill kit readily available?	____	____	_____
7. Are product containers serviceable? (Not leaking, no dents or excessive rust, and lid(s) tightly closed)	____	____	_____
7. Are container labels legible and clearly identify the name of the material in the container?	____	____	_____
8. Are containers within shelf life expiration dates?	____	____	_____
9. Are new products segregated from “in-use” containers, and are stocks rotated on a “first opened, first used” basis?	____	____	_____
10. Is the paint locker stored inside a heated building?	____	____	_____
11. Are containers stored in an orderly manner, and is the HM storage area free of clutter and debris?	____	____	_____
12. Are gas cylinders properly identified, leak-tight, secured or racked, and stored away from sources of heat, flames, or sparks?	____	____	_____
13. Do opened, “in-use” containers have secondary containment?	____	____	_____

INSPECTOR: _____ **SIGNATURE:** _____

END OF SECTION

SECTION 01415

METRIC MEASUREMENTS

1.1 REFERENCES

The publications listed below form a part of this specification to the extent referenced. The publications are referred to in the text by basic designation only.

AMERICAN SOCIETY FOR TESTING AND MATERIALS (ASTM)

ASTM E 380 (1993) Practice for Use of the International System of Units (SI)

ASTM E 621 (1994) Practice for Use of Metric (SI) Units in Building Design and Construction

1.2 GENERAL

This project includes metric units of measurements. The metric units used are the International System of Units (SI) developed and maintained by the General Conference on Weights and Measures (CGPM); the name International System of Units and the international abbreviation SI were adopted by the 11th CGPM in 1960. A number of circumstances require that both metric SI units and English inch-pound (I-P) units be included in a section of the specifications. When both metric and I-P measurements are included, the section may contain measurements for products that are manufactured to I-P dimensions and then expressed in mathematically converted metric value (soft metric) or, it may contain measurements for products that are manufactured to an industry recognized rounded metric (hard metric) dimensions but are allowed to be substituted by I-P products to comply with the law. Dual measurements are also included to indicate industry and/or Government standards, test values or other controlling factors, such as the code requirements where I-P values are needed for clarity or to trace back to the referenced standards, test values or codes. For American Society for Testing and Materials (ASTM) references in the technical specifications, the Contractor shall use the metric publication, if one is available (For example: ASTM A 36, use ASTM A 36M). An acceptable substitute to hard Metric SI Concrete Masonry Units (CMU) and Recessed Lighting Fixtures (RLF) is English inch-pound (soft metric) CMU and RLF. The Contractor shall be responsible for any adjustments required to accommodate these alternative English inch-pound units at no additional cost to the Government.

1.3 USE OF MEASUREMENTS

Measurements shall be either in SI or I-P units as indicated, except for soft metric measurements or as otherwise authorized. The Contractor shall be responsible for all associated labor and materials when authorized to substitute one system of units for another and for the final assembly and performance of the specified work and/or products.

1.3.1 Hard Metric

A hard metric measurement is indicated by an SI value with no expressed correlation to an I-P value, i.e., where an SI value is not an exact mathematical conversion of an I-P value, such as the use of 100 mm in lieu of 4 inches. Hard metric products are required when only metric dimensions are indicated, except for Contractor's options as outlined in paragraph GENERAL above. Hard metric measurements are often used for field data such as distance from one point to another or distance above the floor. Products are

considered to be hard metric when they are manufactured to metric dimensions or have an industry recognized metric designation.

1.3.2 Soft Metric

a. A soft metric measurement is indicated by an SI value which is a mathematical conversion of the I-P value shown in parentheses e.g. 38.1 mm (1-1/2 inches). Soft metric measurements are used for measurements pertaining to products, test values, and other situations where the I-P units are the standard for manufacture, verification, or other controlling factor. The I-P value shall govern while the metric measurement is provided for information.

b. A soft metric measurement is also indicated for products that are manufactured in industry designated metric dimensions but are required by law to allow substitute I-P products. These measurements are indicated by a manufacturing hard metric product dimension followed by the substitute I-P equivalent value in parentheses e.g., 190 x 190 x 390 mm (7-5/8 x 7-5/8 x 15-5/8 inches).

1.3.3 Neutral

A neutral measurement is indicated by an identifier which has no expressed relation to either an SI or an I-P value (e.g., American Wire Gage (AWG) which indicates thickness but in itself is neither SI nor I-P).

1.4 COORDINATION

Discrepancies, such as mismatches or product unavailability, arising from use of both metric and non-metric measurements and discrepancies between the measurements in the specifications and the measurements in the drawings shall be brought to the attention of the Contracting Officer for resolution.

1.5 RELATIONSHIP TO SUBMITTALS

Submittals for Government approval or for information only shall cover the SI or I-P products actually being furnished for the project. The Contractor shall submit the required drawings and calculations in the same units used in the contract documents describing the product or requirement unless otherwise instructed or approved. The Contractor shall use ASTM E 380 and ASTM E 621 as the basis for establishing metric measurements required to be used in submittals.

END OF SECTION

SECTION 01451

CONTRACTOR QUALITY CONTROL

PART 1 GENERAL

1.1 REFERENCES

The publications listed below form a part of this specification to the extent referenced. The publications are referred to in the text by basic designation only.

AMERICAN SOCIETY FOR TESTING AND MATERIALS (ASTM)

ASTM D 3740	(1996) Minimum Requirements for Agencies Engaged in the Testing and/or Inspection of Soil and Rock as Used in Engineering Design and Construction
ASTM E 329	(1995b) Agencies Engaged in the Testing and/or Inspection of Materials Used in Construction

1.2 PAYMENT

Separate payment will not be made for providing and maintaining an effective Quality Control program, and all costs associated therewith shall be included in the applicable unit prices or lump-sum prices contained in the Bidding Schedule.

PART 2 PRODUCTS (NOT APPLICABLE)

PART 3 EXECUTION

3.1 GENERAL

The Contractor is responsible for quality control and shall establish and maintain an effective quality control system in compliance with the Contract Clause titled "Inspection of Construction." The quality control system shall consist of plans, procedures, and organization necessary to produce an end product which complies with the contract requirements. The system shall cover all construction operations, both onsite and offsite, and shall be keyed to the proposed construction sequence. The project superintendent will be held responsible for the quality of work on the job and is subject to removal by the Contracting Officer for non-compliance with quality requirements specified in the contract.

3.2 QUALITY CONTROL PLAN

3.2.1 General

The Contractor shall furnish for review by the Government, not later than 10 days after receipt of notice to proceed, the Contractor Quality Control (CQC) Plan proposed to implement the requirements of the Contract Clause titled "Inspection of Construction." The plan shall identify personnel, procedures,

control, instructions, test, records, and forms to be used. The Government will consider an interim plan for the first 60 days of operation. Construction will be permitted to begin only after acceptance of the CQC Plan or acceptance of an interim plan applicable to the particular feature of work to be started. Work outside of the features of work included in an accepted interim plan will not be permitted to begin until acceptance of a CQC Plan or another interim plan containing the additional features of work to be started.

3.2.2 Content of the CQC Plan

The CQC Plan shall include, as a minimum, the following to cover all construction operations, both onsite and offsite, including work by subcontractors, fabricators, suppliers, and purchasing agents:

a. A description of the quality control organization, including a chart showing lines of authority and acknowledgment that the CQC staff shall implement the three phase control system for all aspects of the work specified. The staff shall include a CQC System Manager who shall report to the project manager. If the project manager and project superintendent are the same person, the CQC System Manager shall report to someone higher in the Contractor's organization than the project manager.

b. The name, qualifications (in resume format), duties, responsibilities, and authorities of each person assigned a CQC function.

c. A copy of the letter to the CQC System Manager signed by an authorized official of the firm which describes the responsibilities and delegates sufficient authorities to adequately perform the functions of the CQC System Manager, including authority to stop work which is not in compliance with the contract. The CQC System Manager shall issue letters of direction to all other various quality control representatives outlining duties, authorities, and responsibilities. Copies of these letters shall also be furnished to the Government.

d. Procedures for scheduling, reviewing, certifying, and managing submittals, including those of subcontractors, offsite fabricators, suppliers, and purchasing agents. These procedures shall be in accordance with Section 01330 SUBMITTAL PROCEDURES.

e. Control, verification, and acceptance testing procedures for each specific test to include the test name, specification paragraph requiring test, feature of work to be tested, test frequency, and person responsible for each test. (Laboratory facilities will be approved by the Contracting Officer.)

f. Procedures for tracking preparatory, initial, and follow-up control phases and control, verification, and acceptance tests including documentation.

g. Procedures for tracking construction deficiencies from identification through acceptable corrective action. These procedures shall establish verification that identified deficiencies have been corrected.

h. Reporting procedures, including proposed reporting formats.

i. A list of the definable features of work. A definable feature of work is a task which is separate and distinct from other tasks, has separate control requirements, and may be identified by

different trades or disciplines, or it may be work by the same trade in a different environment. Although each section of the specifications may generally be considered as a definable feature of work, there are frequently more than one definable features under a particular section. This list will be agreed upon during the coordination meeting.

3.2.3 Acceptance of Plan

Acceptance of the Contractor's plan is required prior to the start of construction. Acceptance is conditional and will be predicated on satisfactory performance during the construction. The Government reserves the right to require the Contractor to make changes in his CQC Plan and operations including removal of personnel, as necessary, to obtain the quality specified.

3.2.4 Notification of Changes

After acceptance of the CQC Plan, the Contractor shall notify the Contracting Officer in writing of any proposed change. Proposed changes are subject to acceptance by the Contracting Officer.

3.3 COORDINATION MEETING

After the Preconstruction Conference, before start of construction, and prior to acceptance by the Government of the CQC Plan, the Contractor shall meet with the Contracting Officer or Authorized Representative and discuss the Contractor's quality control system. The CQC Plan shall be submitted for review a minimum of 5 calendar days prior to the Coordination Meeting. During the meeting, a mutual understanding of the system details shall be developed, including the forms for recording the CQC operations, control activities, testing, administration of the system for both onsite and offsite work, and the interrelationship of Contractor's Management and control with the Government's Quality Assurance. Minutes of the meeting shall be prepared by the Government and signed by both the Contractor and the Contracting Officer. The minutes shall become a part of the contract file. There may be occasions when subsequent conferences will be called by either party to reconfirm mutual understandings and/or address deficiencies in the CQC system or procedures which may require corrective action by the Contractor.

3.4 QUALITY CONTROL ORGANIZATION

3.4.1 General

The requirements for the CQC organization are a CQC System Manager and sufficient number of additional qualified personnel to ensure contract compliance. The Contractor shall provide a CQC organization which shall be at the site at all times during progress of the work and with complete authority to take any action necessary to ensure compliance with the contract. All CQC staff members shall be subject to acceptance by the Contracting Officer.

3.4.2 CQC System Manager

The Contractor shall identify as CQC System Manager an individual within the onsite work organization who shall be responsible for overall management of CQC and have the authority to act in all CQC matters for the Contractor. The CQC System Manager shall be a graduate engineer, graduate architect, or a graduate of construction management, with a minimum of 5 years construction experience on construction similar to this contract or a construction person with a minimum of 10 years in related

work. This CQC System Manager shall be on the site at all times during construction and shall be employed by the prime Contractor. The CQC System Manager shall be assigned no other duties. An alternate for the CQC System Manager shall be identified in the plan to serve in the event of the System Manager's absence. The requirements for the alternate shall be the same as for the designated CQC System Manager.

3.4.3 Additional Requirement

In addition to the above experience education requirements the CQC System Manager shall have completed the course entitled "Construction Quality Management For Contractors". This course is periodically offered at AGC offices throughout the state of Washington and Oregon.

3.4.4 Organizational Changes

The Contractor shall maintain the CQC staff at full strength at all times. When it is necessary to make changes to the CQC staff, the Contractor shall revise the CQC Plan to reflect the changes and submit the changes to the Contracting Officer for acceptance.

3.5 SUBMITTALS

Submittals shall be made as specified in Section 01330 SUBMITTAL PROCEDURES. The CQC organization shall be responsible for certifying that all submittals are in compliance with the contract requirements.

3.6 CONTROL

Contractor Quality Control is the means by which the Contractor ensures that the construction, to include that of subcontractors and suppliers, complies with the requirements of the contract. At least three phases of control shall be conducted by the CQC System Manager for each definable feature of work as follows:

3.6.1 Preparatory Phase

This phase shall be performed prior to beginning work on each definable feature of work, after all required plans/documents/materials are approved/accepted, and after copies are at the work site. This phase shall include:

a. A review of each paragraph of applicable specifications.

b. A review of the contract drawings.

c. A check to assure that all materials and/or equipment have been tested, submitted, and approved.

d. Review of provisions that have been made to provide required control inspection and testing.

e. Examination of the work area to assure that all required preliminary work has been completed and is in compliance with the contract.

f. A physical examination of required materials, equipment, and sample work to assure that they are on hand, conform to approved shop drawings or submitted data, and are properly stored.

g. A review of the appropriate activity hazard analysis to assure safety requirements are met.

h. Discussion of procedures for controlling quality of the work including repetitive deficiencies. Document construction tolerances and workmanship standards for that feature of work.

i. A check to ensure that the portion of the plan for the work to be performed has been accepted by the Contracting Officer.

j. Discussion of the initial control phase.

k. The Government shall be notified at least 48 hours in advance of beginning the preparatory control phase. This phase shall include a meeting conducted by the CQC System Manager and attended by the superintendent, other CQC personnel (as applicable), and the foreman responsible for the definable feature. The results of the preparatory phase actions shall be documented by separate minutes prepared by the CQC System Manager and attached to the daily CQC report. The Contractor shall instruct applicable workers as to the acceptable level of workmanship required in order to meet contract specifications.

3.6.2 Initial Phase

This phase shall be accomplished at the beginning of a definable feature of work. The following shall be accomplished:

a. A check of work to ensure that it is in full compliance with contract requirements. Review minutes of the preparatory meeting.

b. Verify adequacy of controls to ensure full contract compliance. Verify required control inspection and testing.

c. Establish level of workmanship and verify that it meets minimum acceptable workmanship standards. Compare with required sample panels as appropriate.

d. Resolve all differences.

e. Check safety to include compliance with and upgrading of the safety plan and activity hazard analysis. Review the activity analysis with each worker.

f. The Government shall be notified at least 24 hours in advance of beginning the initial phase. Separate minutes of this phase shall be prepared by the CQC System Manager and attached to the daily CQC report. Exact location of initial phase shall be indicated for future reference and comparison with follow-up phases.

g. The initial phase should be repeated for each new crew to work onsite, or any time acceptable specified quality standards are not being met.

3.6.3 Follow-up Phase

Daily checks shall be performed to assure control activities, including control testing, are providing continued compliance with contract requirements, until completion of the particular feature of work. The checks shall be made a matter of record in the CQC documentation. Final follow-up checks shall be conducted and all deficiencies corrected prior to the start of additional features of work which may be affected by the deficient work. The Contractor shall not build upon nor conceal non-conforming work.

3.6.4 Additional Preparatory and Initial Phases

Additional preparatory and initial phases shall be conducted on the same definable features of work if the quality of on-going work is unacceptable, if there are changes in the applicable CQC staff, onsite production supervision or work crew, if work on a definable feature is resumed after a substantial period of inactivity, or if other problems develop.

3.7 TESTS

3.7.1 Testing Procedure

The Contractor shall perform specified or required tests to verify that control measures are adequate to provide a product which conforms to contract requirements, see Table 1 – Minimum Testing, attached at the end of this specification section. Upon request, the Contractor shall furnish to the Government duplicate samples of test specimens for possible testing by the Government. Testing includes operation and/or acceptance tests when specified. The Contractor shall procure the services of a Corps of Engineers approved testing laboratory or establish an approved testing laboratory at the project site. The Contractor shall perform the following activities and record and provide the following data:

a. Verify that testing procedures comply with contract requirements.

b. Verify that facilities and testing equipment are available and comply with testing standards.

c. Check test instrument calibration data against certified standards.

d. Verify that recording forms and test identification control number system, including all of the test documentation requirements, have been prepared.

e. Results of all tests taken, both passing and failing tests, shall be recorded on the CQC report for the date taken. Specification paragraph reference, location where tests were taken, and the sequential control number identifying the test shall be given. If approved by the Contracting Officer, actual test reports may be submitted later with a reference to the test number and date taken. An information copy of tests performed by an offsite or commercial test facility shall be provided directly to the Contracting Officer. Failure to submit timely test reports as stated may result in nonpayment for related work performed and disapproval of the test facility for this contract.

3.7.2 Testing Laboratories

3.7.2.1 Capability Check

The Government reserves the right to check laboratory equipment in the proposed laboratory for compliance with the standards set forth in the contract specifications and to check the laboratory technician's testing procedures and techniques. Costs of testing the Contractor Laboratory facilities for Government acceptance shall be borne by the Contractor. Laboratory facilities, including personnel and equipment, utilized for testing soils, concrete, asphalt and steel shall meet criteria detailed in ASTM D 3740 and ASTM E 329, and be accredited by the American Association of Laboratory Accreditation (AALA), National Institute of Standards and Technology (NIST), National Voluntary Laboratory Accreditation Program (NVLAP), the American Association of State Highway and Transportation Officials (AASHTO), or other approved national accreditation authority. All personnel performing concrete testing shall be certified by the American Concrete Institute (ACI). The contractor shall submit documentation showing the AALA, or other approved testing facility, certification, personnel ACI certifications, and the name and work experience of the Registered Professional Engineer on the staff.

3.7.3 Onsite Laboratory

The Government reserves the right to utilize the Contractor's control testing laboratory and equipment to make assurance tests and to check the Contractor's testing procedures, techniques, and test results at no additional cost to the Government.

3.7.4 Furnishing or Transportation of Samples for Testing

Costs incidental to the transportation of samples or materials will be borne by the Contractor. Samples of materials for test verification and acceptance testing by the Government shall be delivered to the Corps of Engineers Division Laboratory, f.o.b., at the following address:

U.S. Army Corps of Engineers
Materials Testing Center
Waterways Experiment Station
3909 Hall Ferry Road
Vicksburg, MS 39180-6199
Phone: (610) 634-3974

ATTN: Project _____, Contract Number _____

Coordination for each specific test, exact delivery location and dates will be made through the Area Office.

If samples are scheduled to arrive at the laboratory on a weekend (after 1700 Friday through Sunday) notify the laboratory at least 24 hours in advance at (601) 634-3974 to arrange for delivery.

3.8 COMPLETION INSPECTION

3.8.1 Punch-Out Inspection

Near the completion of all work or any increment thereof established by a completion time stated in the Special Clause entitled "Commencement, Prosecution, and Completion of Work," or stated elsewhere in the specifications, the CQC System Manager shall conduct an inspection of the work and develop a punch list of items which do not conform to the approved drawings and specifications. Such a list of deficiencies shall be included in the CQC documentation, as required by paragraph DOCUMENTATION below, and shall include the estimated date by which the deficiencies will be corrected. The CQC System Manager or staff shall make a second inspection to ascertain that all deficiencies have been corrected. Once this is accomplished, the Contractor shall notify the Government that the facility is ready for the Government Pre-Final inspection.

3.8.2 Pre-Final Inspection

The Government will perform this inspection to verify that the facility is complete and ready to be occupied. A Government Pre-Final Punch List may be developed as a result of this inspection. The Contractor's CQC System Manager shall ensure that all items on this list have been corrected before notifying the Government so that a Final inspection with the customer can be scheduled. Any items noted on the Pre-Final inspection shall be corrected in a timely manner. These inspections and any deficiency corrections required by this paragraph shall be accomplished within the time slated for completion of the entire work or any particular increment thereof if the project is divided into increments by separate completion dates.

3.8.3 Final Acceptance Inspection

The Contractor's Quality Control Inspection personnel, plus the superintendent or other primary management person, and the Contracting Officer's Representative shall be in attendance at this inspection. Additional Government personnel including, but not limited to, those from Base/Post Civil Facility Engineer user groups, and major commands may also be in attendance. The final acceptance inspection will be formally scheduled by the Contracting Officer based upon results of the Pre-Final inspection. Notice shall be given to the Contracting Officer at least 14 days prior to the final acceptance inspection and shall include the Contractor's assurance that all specific items previously identified to the Contractor as being unacceptable, along with all remaining work performed under the contract, will be complete and acceptable by the date scheduled for the final acceptance inspection. Failure of the Contractor to have all contract work acceptably complete for this inspection will be cause for the Contracting Officer to bill the Contractor for the Government's additional inspection cost in accordance with the contract clause titled "Inspection of Construction".

3.9 DOCUMENTATION

The Contractor shall maintain current records providing factual evidence that required quality control activities and/or tests have been performed. These records shall include the work of subcontractors and suppliers and shall be on an acceptable form that includes, as a minimum, the following information:

a. Contractor/subcontractor and their area of responsibility.

b. Operating plant/equipment with hours worked, idle, or down for repair.

c. Work performed each day, giving location, description, and by whom. When Network Analysis (NAS) is used, identify each phase of work performed each day by NAS activity number.

d. Test and/or control activities performed with results and references to specifications/drawings requirements. The control phase should be identified (Preparatory, Initial, Follow-up). List deficiencies noted along with corrective action.

e. Quantity of materials received at the site with statement as to acceptability, storage, and reference to specifications/drawings requirements.

f. Submittals reviewed, with contract reference, by whom, and action taken.

g. Off-site surveillance activities, including actions taken.

h. Job safety evaluations stating what was checked, results, and instructions or corrective actions.

i. Instructions given/received and conflicts in plans and/or specifications.

j. Contractor's verification statement.

These records shall indicate a description of trades working on the project; the number of personnel working; weather conditions encountered; and any delays encountered. These records shall cover both conforming and deficient features and shall include a statement that equipment and materials incorporated in the work and workmanship comply with the contract. The original and one copy of these records in report form shall be furnished to the Government daily within 24 hours after the date covered by the report, except that reports need not be submitted for days on which no work is performed. As a minimum, one report shall be prepared and submitted for every 7 days of no work and on the last day of a no work period. All calendar days shall be accounted for throughout the life of the contract. The first report following a day of no work shall be for that day only. Reports shall be signed and dated by the CQC System Manager. The report from the CQC System Manager shall include copies of test reports and copies of reports prepared by all subordinate quality control personnel.

3.10 SAMPLE FORMS

Sample forms are attached at the end of this specification section.

3.11 NOTIFICATION OF NONCOMPLIANCE

The Contracting Officer will notify the Contractor of any detected noncompliance with the foregoing requirements. The Contractor shall take immediate corrective action after receipt of such notice. Such notice, when delivered to the Contractor at the work site, shall be deemed sufficient for the purpose of notification. If the Contractor fails or refuses to comply promptly, the Contracting Officer may issue an order stopping all or part of the work until satisfactory corrective action has been taken. No part of the time lost due to such stop orders shall be made the subject of claim for extension of time or for excess costs or damages by the Contractor.

TABLE 1

MINIMUM SAMPLING AND TESTING FREQUENCY

Materials	Test	Minimum Sampling and Testing Frequency
Fills, Embankments, Backfills, Subgrade, Subbase, and Base Course Material		
Fill and Embankment	Field Density2/12/	Two tests per lift for each increment or fraction of 1,672 square meters (2000 sy) and any time material type changes.
	Lab Density3/	One test initially per each type of materials or blended material and any time material type changes, and one every 10 field density tests.
	Gradation1/	One test every 153 cubic meters (200 cubic yards) of fill for each type of materials or blended material and any time material type changes.
Subgrade	Field Density2/12/	One test per each increment or fraction of 84 square meters (100 s.y.)
	Lab Density3/	One test every 10 field density tests.
Backfill for Culverts, Trenches, Buildings and Walls, Pavements, and Other Structures	Field Density2/12/	Culverts: One test per each lift.
		Trenches: One test per lift for each increment or fraction of 152 lineal meters (500 linear feet) for backfill. Under pavements, one test every lift and at every crossing.
		Walls and Buildings Perimeters, Including Footings: One test per lift for each increment or fraction of 61 lineal meters (200 linear feet) of backfill.

Materials	Test	Minimum Sampling and Testing Frequency
		Buildings Slabs on Grade: One test per lift for each increment or faction of 93 square meters (1000 s.f.) Areas enclosed by grade beams, compacted with power driven hand operated compactors: One test per lift for each increment or fraction of 46 square meters (500 s.f.) Pavements: Two tests per lift for each increment or fraction of 1,672 square meters (2000 s.y.) Other Structures: One test per lift for each increment or fraction of 61 lineal meters (200 linear feet) of backfill.
	Lab Density3/	One test initially per each type of material or blended material and one every 10 field density tests.
	Gradation1/	One test per each type of material or blended material and one every 10 field density tests.
Subbase and Base	Gradation1/(including .02 mm particles size limits.	1 sample for every 3,345 square meters (4,000 sy.)
	In-Place Density2/ 12/	1 sample every 1,672 square meters (2,000 sy.)
	Moisture-Density Relationship3/	1 initially and every 20 density tests.
	Asphaltic Concrete and Pavements	(Non airfield)
Asphaltic concrete	Marshall method Test	1 test per day minimum and 1 per 907,200 kilograms (1,000 tons) thereafter.
	Specific Gravity	per each Marshall Test.
	Extraction	1 test for each Marshall Method.
	Gradation5/	1 per each extraction test.

Materials	Test	Minimum Sampling and Testing Frequency
	Fracture faces[5/]	1 per each extraction test.
Cored or sawed specimens	Perform complete test (thickness, in-place density and bulk specific gravity) on each cored or sawed sample.[12/]	Take 1 set of 3 cored sawed specimens for each 836 square meters (1,000 square yards) or fraction thereof. One specimen shall be taken from longitudinal joint or from transverse joint.

Portland Cement Concrete (Non airfield)

Coarse and Fine Aggregate[7/]	Moisture, specific gravity and absorption[8/]	1 initially.
	Gradation and fineness modules	1 every 191 cubic meters (250 cy) of concrete.
	Moisture, specific gravity and absorption[8/]	(same as coarse aggregate).
Concrete	Slump	Conduct test every day of placement and for every 19 cubic meters (25 cy) and more frequently if batching appears inconsistent. Conduct with strength tests.
	Entrained Air	Conduct with slump test.
	Ambient and concrete temperatures	Conduct with slump tests.
	Unit weight, yield, and water cement ratio	Conduct with strength tests. Check unit weight and adjust aggregate weights to insure proper yield.
	Flexural strength and evaluation	When specified for slabs on grade or for concrete pavements, take one set of 6 beams every 76 cubic meters (100 cy) of concrete with a minimum of 1 set per day. Two beams shall be tested at 7 days, two at 28 days, and two at 90 days.

Materials	Test	Minimum Sampling and Testing Frequency
	Compressive strength	One set of 3 cylinders per day and every 76 cubic meters (100 cy) for each class of structural concrete. Test one cylinder at 7 days and two at 28 days. Additional field cure cylinders shall be made when insitu strengths are required to be known.
Vibrators	Frequency and amplitude	Check frequency and amplitude initially and any time vibration is questionable.
	Masonry	
Concrete Masonry Units9/	Dry shrinkage10/	1 set of 3 per 10,000 units and manufacturers certification and test report.
	Airdry condition11/	Same as dry shrinkage.
	Absorption	" " " "
	Compressive strength	" " " "
	Unit Weight	" " " "
Mortar and grout	Compressive Strength	1 set of 3, every 2,000 units (1 test at 7 days and 2 tests at 28 days).

NOTES:

1/All acceptance tests shall be conducted from in-place samples.
2/Additional tests shall be conducted when variations occur due to the contractors operations, weather conditions, site conditions, etc.
3/Classification (ASTM D-2487), moisture contents, Atterberg limits and specific gravity tests shall be conducted for each compaction test if applicable.
4/Materials to be submitted only upon request by the Contracting Officer.
5/Tests can substitute for same tests required under "Aggregates" (from bins or source), although gradations will be required when blending aggregates.
6/Increase quantities by 50 percent for Paving mixes and by 100 percent for Government testing of admixtures. Include standard deviation for similar mixes from the intended batch plant and data from a minimum of 30 tests, if available. Refer to ACI 214.
7/A petrographic report for aggregate is required with the sample for source approval. If the total amount of all types of concrete is less than 153 cubic meters (200 c.y.) service records from three separate structures in similar environments which used the aggregates may substitute for the petrographic report.
8/Aggregate moisture tests are to be conducted in conjunction with concrete strength tests for w/c calculations.
9/For less than 1,000 units, the above test may be waived at the discretion of the Contracting Officer and acceptance based on manufacturers certification and test report.
10/Additional tests shall be performed when changes are made either in the manufacturing processes or in materials used in the production of the masonry units.
11/If adequate storage protection is not provided at the jobsite, additional tests shall be made to determine that the allowable moisture condition has not been exceeded before the blocks can be placed in the structure.
12/The nuclear densometer, if properly calibrated, may be used but only in addition to the required testing frequency and procedures using sandcones. The densometer shall be calibrated and is recommended for use when the time for complete results becomes critical.

TABLE 2

STANDARD REPORT FORMS AND USE

Form Number	Form Title	Form Use
NPD 300	Transmittal of Material Samples	Form to accompany any samples sent to NPD Laboratory
NPD 326	Compaction Test Data Sheet	Soil compaction tests.
DD 1206	Sieve Analysis Data	Sieve analysis data sheet for soils.
NPD 320	Mechanical Analysis Test Data	Sieve analysis data sheet and hydrometer data sheet for soils.
ENG 2087	Gradation Curves	Gradation graph for soils and aggregates. (To include specification limits).
DD 1205	Soil Moisture Content	Moisture content sheet for soils and/or aggregates.
NPD 322	Specific Gravity and Absorption Test Data Sheet	Specific gravity and absorption test for soil and aggregates.
DD 1209	Atterberg Limits Determinations	Test and graph for Atterburg limits tests.
DD 1217	Bituminous Mix Design -Aggregate Blending	Aggregate blending sheet for asphaltic concrete.
NPD 346	Asphaltic Concrete Mix Design Report	Asphaltic mix design and aggregate grinding.
DD 1218	Marshall Method - Computation of Properties of Asphalt Mixtures	Marshall Test form.
NPD 88	Screen Analysis of Concrete Aggregates	Gradation test form for aggregates (self carboning).
NPD 357	Mortar Strength of Fine Aggregate Data Sheet	Flexural and compressive strength test form for mortar.
NPD 355	Data Sheet - Compressive and Flexural Strengths of Concrete	Compressive and/or flexural strength testing (include averages per specification).
NPD 359	Report of Concrete Mixture Design	Mix design sheet for Contractor mix submittal.
NPS 57	Statistical Evaluation of Concrete Compression Tests	Summary sheet of concrete tests. Form can be used for flexural strengths if revised to conform with proper days specified. A separate sheet is to be used for each mix design.

(sample of typical Contractor's Daily Report)
DAILY CONSTRUCTION QUALITY CONTROL REPORT

Contract Number: _____ Date: _____ Rpt No._____

Contract Title: _____ Location: _____

Weather: Clear __ P.Cloudy __ Cloudy __ Rainfall __ (__% of workday)

Temperature during workday: High ____ degrees F. Low ___ degrees F.

1. WORK PERFORMED BY CONTRACTOR/SUBCONTRACTOR(S):

Contractor Name	No. of Workers	Crafts/Hours	Work performed

2. EQUIPMENT DATA:

Type, Size, Etc.	Owned/Rented	Hours Used	Hours Standby

3. QUALITY CONTROL INSPECTIONS AND RESULTS: (Include a description of preparatory, initial, and/or follow up inspections or meetings; check of subcontractors work and materials delivered to the site compared to submittals and/or specifications; comments on the proper storage of materials; include comments on corrective actions to be taken):

_____

_____

_____

_____

4. QUALITY CONTROL TESTING AND RESULTS (comment on tests and attach test reports):

_____

_____

_____

5. DAILY SAFETY INSPECTIONS (Include comments on new hazards to be added to the Hazard Analysis and corrective action of any safety issues):

_____

_____

6. REMARKS (Include conversations with or instructions from the Government representatives; delays of any kind that are impacting the job; conflicts in the contract documents; comments on change orders; environmental considerations; etc.):

_____

_____

_____

_____

_____

CONTRACTOR'S VERIFICATION: The above report is complete and correct. All material, equipment used, and work performed during this reporting period are in compliance with the contract documents except as noted above.

_____
CONTRACTOR QC REPRESENTATIVE

(Sample of Typical Contractor's Test Report)

TEST REPORT

STRUCTURE OR BUILDING _____

CONTRACT NO. _____

DESCRIPTION OF ITEM, SYSTEM, OR PART OF SYSTEM TESTED:
_____

_____

DESCRIPTION OF TEST: _____

_____

_____

NAME AND TITLE OF PERSON IN CHARGE OF PERFORMING TESTS FOR THE CONTRACTOR:

NAME_____

TITLE_____

SIGNATURE_____

I HEREBY CERTIFY THAT THE ABOVE DESCRIBED ITEM, SYSTEM, OR PART OF SYSTEM HAS BEEN TESTED AS INDICATED ABOVE AND FOUND TO BE ENTIRELY SATISFACTORY AS REQUIRED IN THE CONTRACT SPECIFICATIONS.

SIGNATURE OF CONTRACTOR
QUALITY CONTROL INSPECTOR_____

DATE_____

REMARKS
_____

_____

_____

END OF SECTION

This page intentionally blank

SECTION 01501

CONSTRUCTION FACILITIES AND TEMPORARY CONTROLS

PART 1 GENERAL

1.1.1 Water

The Government will make available to Contractor, from existing outlets and supplies, reasonable amounts of potable water without charge. Contractor shall reasonably conserve potable water furnished. Contractor, at its own expense, shall install and maintain necessary temporary connections and distribution lines and shall remove the connections and lines prior to final acceptance of construction.

1.1.2 Electricity

Electric power will be made available by the Government, without charge, to the Contractor for performing work at the work area. The Contractor shall carefully conserve electricity furnished. The Contractor, at its own expense and in a workmanlike manner satisfactory to the Contracting Officer, shall extend the existing electrical distribution system (overhead and underground) for temporary electrical service to the worksite, shall install and maintain necessary temporary connections, and shall remove the same prior to final acceptance of the construction.

1.1.3 The cost of potable water and electricity made available to the Contractor free of charge by the Government shall not exceed $1,000 per year.

1.2 SANITARY PROVISIONS

Contractor shall provide sanitary accommodations for the use of employees as may be necessary and shall maintain accommodations approved by the Contracting Officer and shall comply with the requirements and regulations of the State Health Department, County Sanitarian, or other authorities having jurisdiction.

1.3 TEMPORARY ELECTRIC WIRING

1.3.1 Temporary Power and Lighting

The Contractor shall provide construction power facilities in accordance with the safety requirements of the National Electric Code NFPA No. 70 and the SAFETY AND HEALTH REQUIREMENTS MANUAL EM 385-1-1. The Contractor, or its delegated subcontractor, shall enforce the safety requirements of electrical extensions for the work of subcontractors. Work shall be accomplished by journeyman electricians.

1.3.2 Construction Equipment

In addition to the requirements of SAFETY AND HEALTH REQUIREMENTS MANUAL, EM 385-1-1, temporary wiring conductors installed for operation of construction tools and equipment shall be either Type TW or THW contained in metal raceways, or shall be hard usage or extra hard usage multiconductor cord. Temporary wiring shall be secured above the ground or floor in a workmanlike

manner and shall not present an obstacle to persons or equipment. Open wiring may only be used outside of buildings, and then only in accordance with the provisions of the National Electric Code.

1.3.3 Submittals

Submit detailed drawings of temporary power connections. Drawings shall include, but not be limited to, main disconnect, grounding, service drops, service entrance conductors, feeders, GFCI'S, and all site trailer connections.

1.4 FIRE PROTECTION

During the construction period, the Contractor shall provide fire extinguishers in accordance with the safety requirements of the SAFETY AND HEALTH REQUIREMENTS MANUAL, EM 385-1-1. The Contractor shall remove the fire extinguishers at the completion of construction.

1.5 STAGING AREA

Contractor will be provided adequate open staging area as directed by the Contracting Officer. Area is unsecured, and Contractor shall make provisions for its own security.

Contractor shall be responsible for keeping staging area, and office area clean and free of weeds and uncontrolled vegetation growth. Weeds shall be removed by pulling or cutting to within 1-inch of ground level. Lawn areas shall be mown to keep growth to less than 2-inches. All loose debris and material subject to being moved by prevailing winds in the area shall be picked up or secured at all times.

If the area is not maintained in a safe and clean condition as defined above the Contracting Officer may have the area cleaned by others with the costs being deducted from the Contractor's payment.

1.6 HOUSEKEEPING AND CLEANUP

Pursuant to the requirements of Clause CLEANING UP and Clause ACCIDENT PREVENTION, of the CONTRACT CLAUSES, the Contractor shall assign sufficient personnel to insure compliance. The Contractor shall submit a detailed written plan for implementation of this requirement. The plan will be presented as part of the preconstruction safety plan and will provide for keeping the total construction site, structures, and accessways free of debris and obstructions at all times. Work will not be allowed in those areas that, in the opinion of the Contracting Officer, have unsatisfactory cleanup and housekeeping at the end of the preceding day's normal work shift. At least once each day all areas shall be checked by the Quality Control person of the Contractor and the findings recorded on the Quality Control Daily Report. In addition, the Quality Control person shall take immediate action to insure compliance with this requirement. Housekeeping and cleanup shall be assigned by the Contractor to specific personnel. The name(s) of the personnel shall be available at the project site.

1.7 DIGGING PERMIT

Before performing any onsite excavation, Contractor shall obtain a digging permit. The digging permit can be obtained at Building 4301, room 13, on weekdays between 8 a.m. and 3:30 p.m. Typically it will take a Contractor 3-5 working days to collect all signatures necessary for clearances prior to the permit being issued. Digging permits are valid for 30 to 90 days and shall be renewed as necessary.

1.8 CONSTRUCTION NEAR COMMUNICATIONS CABLES

1.8.1 Excavation Near Communication Cables

Digging within 1 meter (3 feet) of communication cables (including fiber optic cables) shall be performed by hand digging until the cable is exposed. The Contracting Officer shall be notified a minimum 3 days prior to digging within 1 meter (3-foot) area near cable. The cable route will be marked by the Government prior to excavation in the area. A digging permit shall be obtained by the Contractor before performing any excavation. The Contractor shall be held responsible for any damage to the cable by excavation procedures. Once the cable is exposed, mechanical excavation may be used if there is no chance of damage occurring to the cable.

1.8.2 Reburial of Exposed Utilities

When existing utility lines are reburied a tape, detectable by pipe detector systems, shall be installed above the uncovered length of the utility at a depth of 300 mm (12 inches) below grade. Tape shall be a minimum .127 mm (5 mil) plastic tape with metallic tracer, minimum 75 mm (3 inches) wide, lettering on tape to show buried utility, and brightly colored.

1.8.3 Access to Communications Manhole or Handhole

No communications manhole or handhole shall be entered without first obtaining a fiber optic cable briefing. Coordinate through the Contracting Officer with USAISC, Fort Lewis, Outside Plant Branch, Cable Section, Bldg. 2682.

1.8.4 Cable Cuts or Damage

If a communications cable is cut or damaged the Contractor shall immediately notify the Contracting Officer (CO) and begin gathering personnel and equipment necessary to repair the cut, or damage. Contractor shall begin repairs within one hour of the cut or damage, unless notified otherwise, and continue repairs without interruption until full service is restored.

1.9 PROJECT SIGN

Contractor shall furnish and install 1 project sign in accordance with conditions hereinafter specified and layout shown on drawing No. 49s-40-05-15, Sheets 1 and 2, except Corps of Engineers' castle and Department of Army seal will be Government furnished. All letters shall be block type, upper case. Letters shall be painted as indicated using exterior-type paint. Sign shall be maintained in excellent condition throughout the life of job. Project sign shall be located as directed. Upon completion of project, sign shall be removed and shall remain the property of Contractor.

1.10 ELEVATED WORK AREAS

Workers in elevated work areas in excess of 2 meters (6 feet) above an adjoining surface require special safety attention. In addition to the provisions of SAFETY AND HEALTH REQUIREMENTS MANUAL, EM 385-1-1, the following safety measures are required to be submitted to the Contracting Officer's Representative. Prior to commencement of work in elevated work areas, the Contractor shall submit drawings depicting all provisions of his positive fall protection system including, but not limited to, all

details of guardrails. Positive protection for workmen engaged in the installation of structural steel and steel joist shall be provided by safety nets, tie-offs, hydraulic man lifts, scaffolds, or other required means. Decking crews must be tied-off or work over nets or platforms not over 2 meters (6 feet) below the work area. Walking on beams and/or girders and the climbing of columns is prohibited without positive protection. Perimeter guardrails shall be installed at floor, roof, or wall openings more than 2 meters (6 feet) above an adjoining surface and on roof perimeters. Rails shall be designed to protect all phases of elevated work including, but not limited to, roofing operations and installation of gutters and flashing. Rails around roofs may not be removed until all work on the roof is complete and all traffic on or across the roof ceases. Rails shall be designed by a licensed engineer to provide adequate stability under any anticipated impact loading. As a minimum, the rails shall consist of a top rail at a height of 1067 mm (42 inches), a mid-rail, and a toe board. Use of tie-offs, hydraulic man lifts, scaffolds, or other means of roof edge protection methods may be utilized on small structures such as family housing, prefabricated metal buildings, etc. If safety belts and harnesses are used, the positive fall protection plan will address fall restraint versus fall arrest. Body belts will ONLY be used for fall restraint, they will not be used for fall arrest.

1.11 TRAFFIC CONTROL PLAN

The Contractor shall submit a Traffic Control Plan for moving traffic through and around the construction zone in a manner that is conducive to the safety of motorists, pedestrians, and workers. This plan shall indicate scheduling, placement, and maintenance of traffic control devices in accordance with the U.S. Department of Transportation, Federal Highway Administration publication, Manual on Uniform Traffic Control Devices. The Contractor shall obtain, in writing, from the Directorate of Public Works (PW) Traffic Engineer, through the Contracting Officer, approval of the Traffic Control Plan. The Contractor shall submit his Traffic Control Plan at least 15 working days prior to commencement of street or road work. Streets (except dead end) may be closed to traffic temporarily (except at least one access lane shall be kept open to traffic) by approved written request to the Contracting Officer at least 10 working days prior to street closure. Excavations shall not remain open for more than 1 working day without approval. The Contractor shall identify by site inspection and indicate on the plan all roads and trails used by military or civilian wheeled and tracked vehicular traffic and, by traffic control devices, prevent this traffic from entering the construction zone.

1.12 UTILITIES NOT SHOWN

The Contractor can expect to encounter, within the construction limits of the entire project, utilities not shown on the drawings and not visible as to the date of this contract. If such utilities will interfere with construction operations, he shall immediately notify the Contracting Officer verbally and then in writing to enable a determination by the Contracting Officer as to the necessity for removal or relocation. If such utilities are removed or relocated as directed, the Contractor shall be entitled to equitable adjustment for any additional work or delay. The types of utilities the Contractor may encounter are waterlines, sewer lines (storm and sanitary), gas lines, fueling lines, steam lines, buried fuel tanks, septic tanks, other buried tanks, communication lines, and power lines. These utilities may be active or abandoned utilities.

1.13 GOVERNMENT WITNESSING AND SCHEDULING OF TESTING

The Contractor shall notify the Contracting Officer, by serial letter, of dates and agenda of all performance testing of the following systems: mechanical (including fire protection and EMCS), and electrical (including fire protection) not later than 10 calendar days prior to start of such testing. In this notification, the Contractor shall certify that all equipment, materials, and personnel necessary to conduct such testing will

be available on the scheduled date and that the systems have been prechecked by him and are ready for performance and/or acceptance testing. Contractor shall also confirm that all operations and maintenance manuals have been submitted and approved. NO PERFORMANCE AND/OR ACCEPTANCE TESTING WILL BE PERMITTED UNTIL THE OPERATIONS AND MAINTENANCE MANUALS HAVE BEEN APPROVED.

Government personnel, at the option of the Government, will travel to the site to witness testing. If the testing must be postponed or canceled for whatever reason not the fault of the government, the Contractor shall provide the Government not less than 3 working days advance notice (notice may be faxed) of this postponement or cancellation. Should this 3 working day notice not be given , the Contractor shall reimburse the Government for any and all out of pocket expenses incurred for making arrangements to witness such testing including, but not limited to airline, rental car, meal, and lodging expenses. Should testing be conducted, but fail and have to be rescheduled for any reason not the fault of the Government, the Contractor shall similarly reimburse the Government for all expenses incurred.

1.14 HARD HAT SIGNS

The Contractor shall provide 610 mm by 610 mm (24 by 24 inch) square Hard Hat Area signs at each entry to the project or work area as directed by the Contracting Officer. A minimum of two signs will be required. Signs shall be in accordance with the sketch at the end of this section.

PART 2 PRODUCTS AND PART 3 EXECUTION (NOT APPLICABLE)

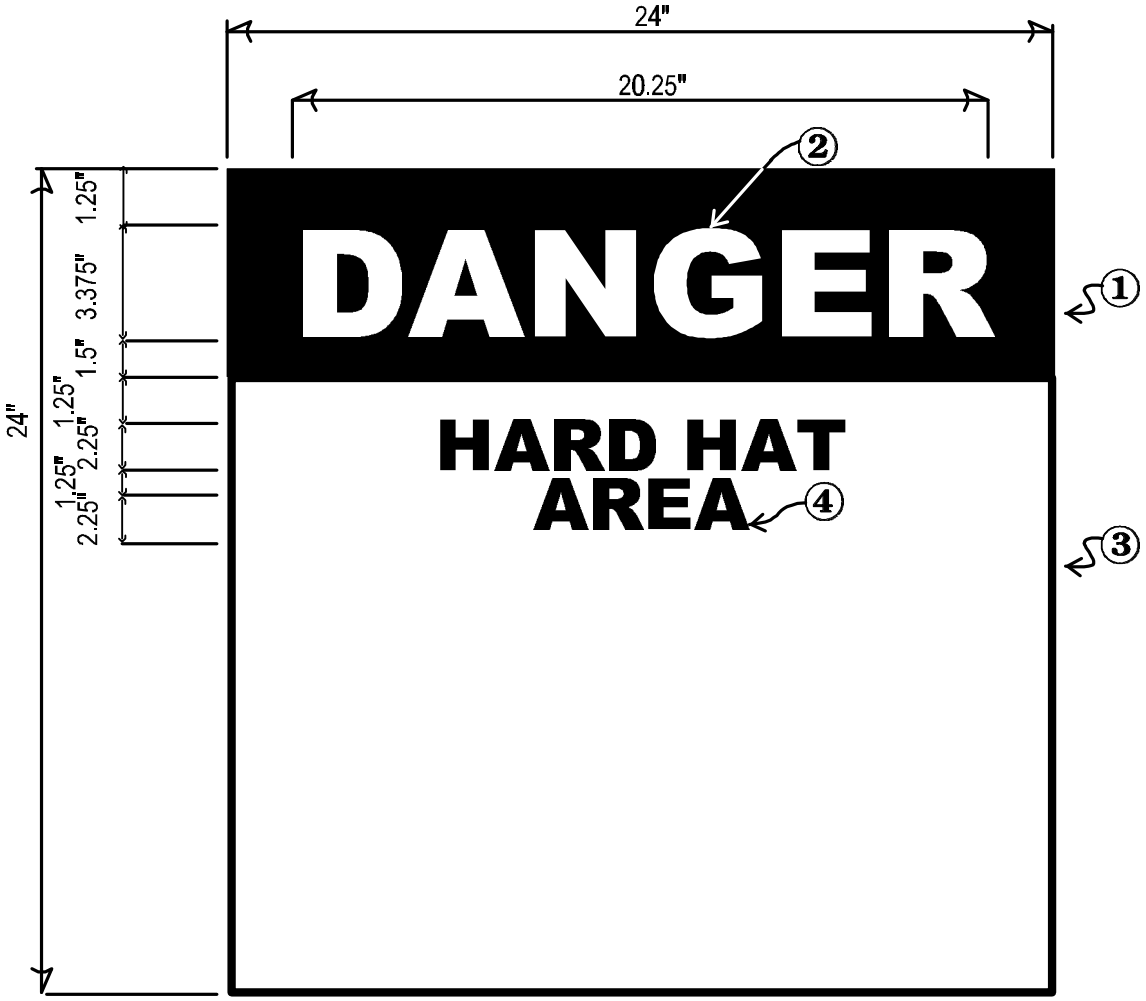

- SIGN SHALL BE FABRICATED FROM .125 THICK 6061-T6 ALUMINUM PANEL
- COLOR
    1. SAFETY RED (SR)
    2. WHITE
    3. WHITE
    4. BLACK
- LETTERING SHALL BE HELVETICA BOLD TYPOGRAPHY.
- LETTERS AND BACKGROUND SHALL BE REFLECTIVE SHEETING MATERIAL.
- SIGNS SHALL BE POSTED AT 6’-6” (BOTTOM SIGN TO GRADE) OR AS DIRECTED BY THE CONTRACTING OFFICER.
- LETTERING TO BE CENTERED ON PANEL.

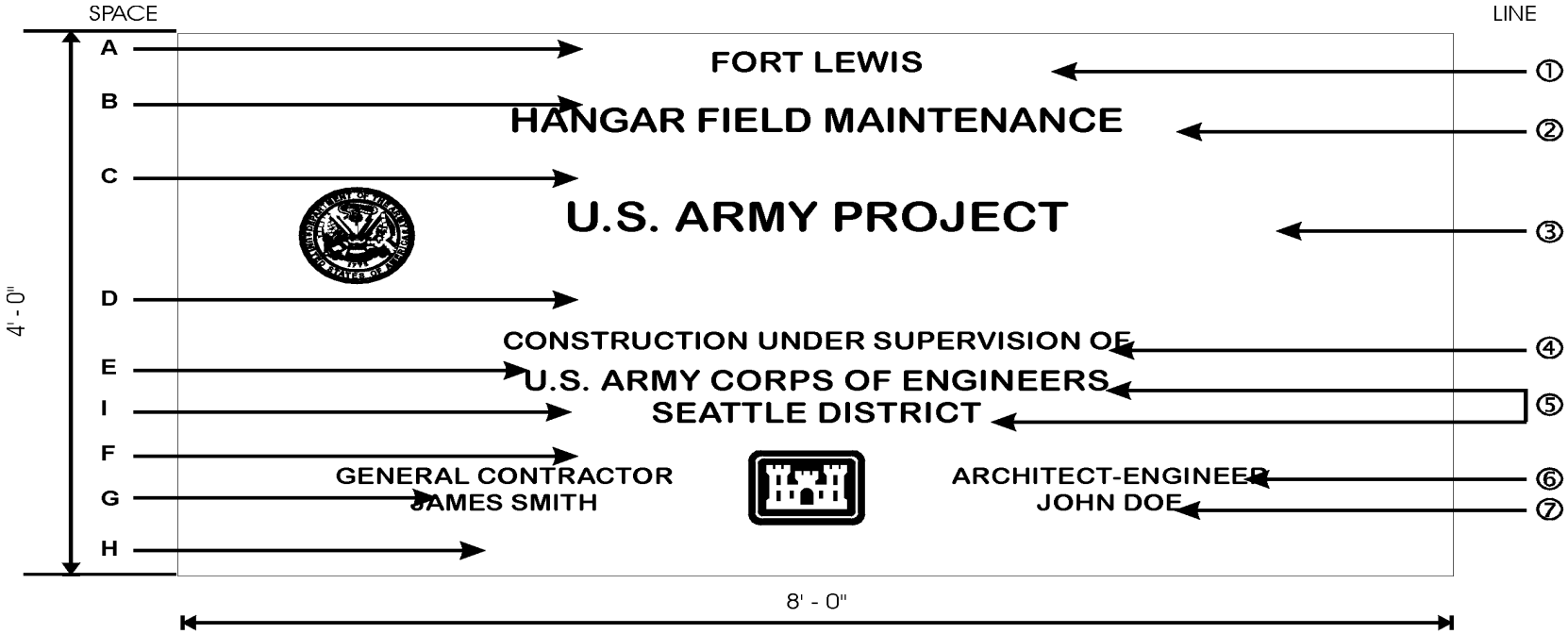

SAMPLE CONSTRUCTION SIGN FOR MCP PROJECTS
SCHEDULE

SPACE	HT.	LINE	DESCRIPTION	LETTER HT.	STROKE
A	2"	1	LOCATION	2 3/8"	1/4"
B	2 5/8"	2	PROJECT NOMENCLATURE *	2 3/4"	3/8"
C	5 3/4"	3	U.S. ARMY PROJECT	4"	1/2"
D	8"	4	CONSTRUCTION UNDER SUP.	1 1/2"	1/8"
E	4"	5	CONSTRUCTION AGENCY *	2 3/8"	1/4"
F	4"	6	GENERAL CONTRACTOR *	1 3/8"	3/16"
G	1"	7	GENERAL CONTRACTOR*	1 3/8"	3/16"
H	2 7/8"	*	WILL VARY TO SUIT PROJECT REQUIREMENTS		
I	2		SEATTLE DISTRICT		

U.S. ARMY

PROJECT
CONSTRUCTION SIGN

Sheet 1 of 2 Scales As shown
U.S. Army Engr. Dist. Seattle, WA.

Dr:	R.L.W.	Transmitted with report
Tr:	R.L.W.	DATED: 20 JUNE 84
Ck:	R.L.W.	File No. 49s/40-05-15

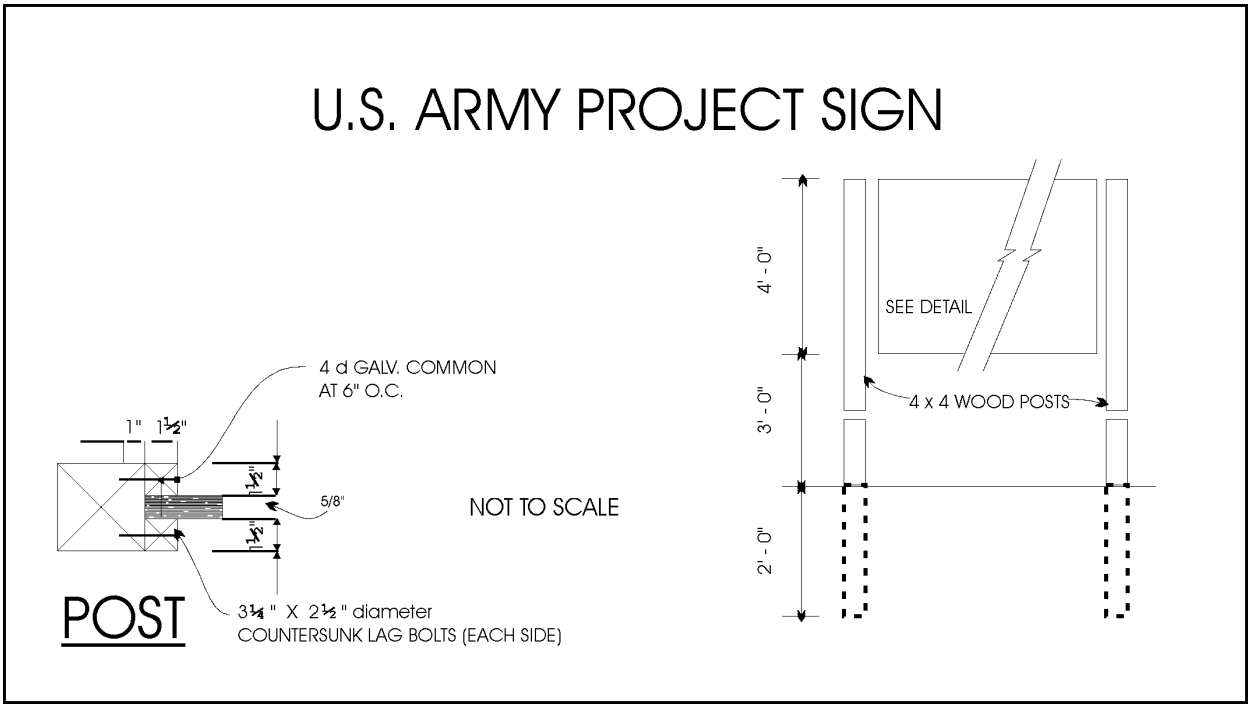

NOTES:

1. Signboard 4' x 8' x 5/8" grade A-C exterior type plywood with medium density overlay on both sides.
2. Paint both sides and edges with one prime coat and two coats of paint, color white exterior type enamel. Lettering shall be as shown on drawing and shall be black gloss exterior type enamel.
3. Lettering shall be Helvetica medium.
4. Acceptable abbreviations may be used for Contractor's name.
5. Department of Army Seal and Corps of Engineers' Castle to be Government furnished.
6. No company logo shall be used.
7. Sign posts and 1½" wood trim shall be painted white.
8. Upon completion of work under this contract, the project sign shall be removed from the job site and shall remain the property of the Contractor.

NOTE: The Contractor shall verify the colors to be used with the Contracting Officer prior to constructing the sign.

SHEET 2 OF 2

END OF SECTION

SECTION 01701

OPERATIONS AND MAINTENANCE MANUALS

PART 1 GENERAL

1.1 SUBMITTALS

Submittals shall be in accordance with SECTION 01330: SUBMITTAL PROCEDURES .

PART 2 PRODUCTS (NOT APPLICABLE)

PART 3 EXECUTION

3.1 GENERAL

The Contractor shall provide Operation and Maintenance (O&M) manuals for the complete project as applicable under this contract, including all Contractor furnished and installed equipment, systems and materials, and all Government furnished-Contractor installed equipment, systems and materials. Included herein are requirements for compiling and submitting the O&M data. Additional O&M data requirements are specified in the individual sections of the technical specifications. O & M Manual requirements shall be coordinated with the requirements as stated in the other technical specification sections and shall include listings for spare parts, framed instructions, etc.

3.1.1 PREPARATION

Manual preparation shall be under the direction of an individual or organization that has demonstrated expertise and a minimum of 3 years experience in the preparation of comprehensive and complete O&M manuals. Qualifications shall be submitted for Contracting Officer approval.

3.1.2 FORMAT

3.1.2 O&M data shall be separated into distinct systems. O&M manuals for any particular system shall include narrative and technical descriptions of the interrelations with other systems. This narrative shall include a description on how the system works with notable features of the system, including normal and abnormal operating conditions. The explanation of the system is to be short and concise with reference to specific manufacturer's equipment manuals for details (see paragraph CONTENT, subparagraph b). If the quantity of material is such that it will not fit within one binder then it shall be divided into volumes, as required (see paragraph Binders).

3.1.3 Six copies of the complete set of manuals shall be provided for each building (as identified by a building number or building description) for multi-building projects. For those multi-building projects where the work is identical in each building, one copy of the manual is required for each building plus six additional copies. For those projects that do not have work in specific buildings, six copies of the manuals are required for the complete project. Any project may have a combination of these requirements to determine the total number of copies required.

3.1.4 The requirement for six copies of the O&M manual shall supersede and replace any requirements for a lesser amount of manuals which may be indicated in some specifications. Each set of manuals shall be tailored for its respective building or facility.

3.2 PRELIMINARY O&M MANUAL AND DATA SUBMITTAL

To establish and assure uniform O&M manual format, the Contractor shall submit two copies of complete set of O & M data without the binders and receive Contracting Officer approval on one (1) of the sets prior to submission of the final bound manuals. Initial O & M Manual data submittal shall be a minimum of 30 days prior to 90 percent project completion.

The Contractor shall also provide two typewritten pages representing the proposed binder marking format as required under Paragraph: Marking and Binding. One page will represent the front cover/spine and the other page will represent the inside of the front cover.

3.2.1 Data submitted for the manual are to be for the specific equipment furnished, and are in addition to that furnished as shop drawings.

3.2.2 The Contracting Officer will require thirty (30) days for review of submitted O&M manual(s) or data. The Contracting Officer will retain one copy of unacceptable O&M manual submittal and return remainder of copies to the Contractor marked "Returned for Correction." If "Returned for Correction." the Contractor shall resubmit the required number of copies of the manual(s) incorporating all comments, prior to substantial completion and/or use and possession. The Contractor may, at his option, update the copy retained by the Government in lieu of providing the added copy.

3.2.3 For equipment or systems requiring personnel training and/or acceptance testing, the final O&M data shall be approved by the Contracting Officer prior to the scheduling of the training and/or testing. O&M data on equipment or systems not requiring training or testing shall be submitted so all data will be approved and bound in the O&M manuals in the required quantity by the time the project reaches 90 percent completion. Failure to furnish approved, bound manuals in the required quantity by the time the project is 90 percent complete, will be cause for the Contracting Officer to hold or adjust the retained percentage in accordance with CONTRACT CLAUSE, PAYMENTS UNDER FIXED PRICE CONSTRUCTION CONTRACTS.

3.2.4 Three of the six completed copies of the final O&M manuals (for each building) shall contain original manufacturer's data. Data in the remaining manuals may be duplicated copies of original data. All data furnished must be of such quality to reproduce clear, legible copies.

3.3 BINDERS

3.3.1 Construction and Assembly

Manuals shall be sliding posts or screw-type aluminum binding posts (three screws) with spine, but only one type shall be used for all manuals. The manuals shall be hardback plastic-covered, cleanable, not over 76 mm (3 inches) thick and designed for 216 mm by 279 mm (8-1/2 by 11 inch) paper. The hard cover shall be of minimum stiffness equal to 2.03 mm (0.080 inch) display board or double weight illustration board.

3.3.2 Marking and Binding

As appropriate, systems shall be grouped into four separate categories and bound into four volumes as follows: Mechanical, Electrical, Fire Protection/Security, and Architectural/General.

Each binder shall have the following information, as a minimum, inscribed on both the spine and cover using an offset or silk screen printing process; "EQUIPMENT OPERATION, MAINTENANCE, AND REPAIR MANUAL;" BUILDING NAME, IDENTIFICATION NUMBER (Building No.), LOCATION, AND DISCIPLINE (MECHANICAL, ELECTRICAL, FIRE PROTECTION/SECURITY, ARCHITECTURAL/GENERAL). Contractor's name and address as well as the contract title and contract number shall be printed on the inside of the front cover.

3.3.3 Color

Color of binder and printing shall be the option of the Contractor except that; (a) printing color shall contrast with binder color, and (b) colors shall be the same for all manuals.

3.3.4 Content

The O&M manuals shall be structured to address each of the following topics in order for each system. When the topic does not apply to a particular system the topic name will be included in the manual with the words "DOES NOT APPLY."

a. Warning Page: A warning page shall be provided to warn of potential dangers (if they exist), such as high voltage, toxic chemicals, flammable liquids, explosive materials, carcinogens, or high pressures. The warning page shall be placed inside the front cover, in front of the title page.

b. Index: Each manual shall have a master index at the front identifying all manuals and volumes and subject matter by system name for each. Following the master index, each manual shall have an index of its enclosures listing each volume, tab numbers, etc., as necessary to readily refer to a particular operating or maintenance instruction. Rigid tabbed fly leaf sheets shall be provided for each separate product and/or piece of equipment under each system in the manual. For example, if a system includes Air Handling Units 1 through 5, there shall be tab sheets AHU-1, AHU-2, AHU-3, AHU-4 and AHU-5. When a manual is divided into volumes, each volume shall have a master index at its front, followed by an index for the specific volume listing in detail all enclosed instructions for materials, individual pieces of equipment, and systems. All pages shall be numbered with the referenced number included in the index.

c. Description: Narrative and technical descriptions of the system and of the interrelations with other systems.

d. Check List Prior to Start Up: Precautions and prechecks prior to start up of equipment and/or system, including safety devices, monitoring devices and control sequence shall be provided.

e. Start Up and Operation: Step-by-step sequential procedures for start up and normal operation checks for satisfactory operation shall be provided. Safety precautions and instructions that should be followed during these procedures shall be incorporated into the operating instructions and flagged for the attention of the operator. Procedures shall include test, manual or normal, and automatic modes.

f. Shutdown: Procedures for normal and emergency shutdown of equipment and/or systems shall be provided. The instructions shall include any procedures necessary for placing the equipment and/or system on standby or preparing the equipment and/or system for start up at a later time. Procedures shall include test, manual or normal, and automatic modes.

g. Operator Preventive Maintenance, Major Maintenance, and Adjustments: The instructions shall include recommended operator preventive maintenance which would normally be performed by operating personnel and adjustment procedures necessary for normal operation. Schedules shall be provided indicating time frames or operating hours for initiating operator maintenance and adjustments, and including manufacturer's recommended major maintenance requirements. Emergency adjustments shall be included and flagged for operator's attention; the instructions shall also include procedures for emergency repairs that could be performed by operating personnel. These emergency repairs or "trouble-shooting guides" shall be outlined in three columns with the following headings:

Column 1 - Trouble
Column 2 - Probable Cause(s)
Column 3 - Correction

h. Operator Data: The instructions shall include equipment and/or system layouts showing all piping, wiring, breakers, valves, dampers, controls, etc., complete with diagrams, schematics, isometrics, and data to explain the detailed operation and control of each individual piece of equipment and/or system, including system components. Layouts shall show the location within the facility of controls, valves, switches, dampers, etc., by reference to site location, wing designation, floor, room number, or other clear and concise directions for locating the item. Operator data may be identical to posted data and framed instructions but shall be prepared as part of the O&M manuals. All control systems operations data shall include the following:

(1) A fully labeled control schematic which details all set points, throttling ranges, actions, spans, proportional bands, and any other adjustment.

(2) A fully labeled elementary diagram (ladder diagram).

(3) A sequence of control on the diagrams cross-referenced to the control schematic and elementary diagram.

(4) A generic, functional description of each control component shown on the drawings.

(5) Catalog data of every control device.

i. Electrical Layout Drawings: The Electrical O&M's shall include complete layout drawings and one-line diagrams of exterior and interior electrical with reference to the buildings and site layout. Drawings shall include layout of interior lighting, interior power, intrusion detection systems, communication systems and fire protection systems. Exterior layout drawings shall show where fed from, pad-mount transformer, metering, main distribution panel and communication lines. Layout drawings shall show the location within the facility or reference to the building and the site plan. Layout drawings shall be half size contract as-built drawings and shall be inserted into plastic pockets and installed at the back of the O&M's that pertain to that particular drawing.

j. Maintenance Procedures: Recommended procedures shall indicate preventive maintenance, lubrication, and good housekeeping practices which should be performed by operating personnel as well as

more complex maintenance procedures which would normally be performed by trained maintenance personnel only. The procedures shall be presented with a schedule indicating time frames or operating hours for specific maintenance to be accomplished. Safety precautions and instructions that should be followed during these procedures shall be incorporated into the maintenance procedures and flagged for the attention of personnel. The procedures shall include necessary operating instructions for taking equipment off line, putting equipment on line, or putting equipment on standby. The instructions shall include all necessary material, equipment, and system data to perform maintenance work and shall include, but not be limited to, manufacturers/bulletins, catalogs, and descriptive data; certified performance curves, copies of approved test plans, including logs and records of performance acceptance test results, and actual adjustments made during final acceptance and inspection; system layouts, including block diagrams, wiring, control, and isometric diagrams: schematic items within the facility; and interrelationships with other items of system.

k. Repairs: Repair procedures shall be presented with a step-by-step procedure for locating and correcting the trouble. A "shop manual" may be used for this purpose. Repair procedures shall be keyed to a troubleshooting guide outlined in three columns with the following headings:

Column 1 - Trouble
Column 2 - Probable Cause(s)
Column 3 - Correction

The procedures shall clearly indicate a major repair activity which should only be performed in a shop or factory versus normal repair work that may be performed onsite or with equipment online. The procedures shall also clearly indicate the limit of repair work that may be performed by Government personnel during the warranty period without voiding warranty provisions. Safety precautions and instructions that should be followed during these procedures shall be incorporated into the repair procedures and flagged for the attention of personnel.

l. Tools: The Contractor shall provide one of each nonstandard tool, test instrument, and gauge necessary for performing maintenance and repair work. A nonstandard tool, test instrument, or gauge is defined as an item normally supplied by the manufacturer for the equipment operation or maintenance. The Contractor shall prepare a master list of such items for all equipment and systems and shall key maintenance and repair procedures to this list. The above referenced items for performing maintenance and repair work shall be provided for each individual facility of multifacility projects.

m. Parts and Supplies: A complete list of parts and supplies shall be provided with the maintenance instructions. The list shall include all parts and components of individual pieces of equipment, and all parts and components of each system and shall identify such items as description of part, model number, circuit or component identification, etc. Parts and supplies lists shall be included within each volume of maintenance instructions. Further, a master list of spare parts and supplies recommended from each manufacturer for 1 year of operation, including source of supply, shall be sublisted with each instruction.

(1) Availability: The Contractor shall list the sources of supply for all parts and supplies, including name of supplier/manufacturer, address, and telephone number. If the parts and supplies are not normally stocked locally, (within 6 hours travel time, round trip by surface transportation) necessary procurement time shall also be a part of the listing.

(2) Spare Parts: The Contractor shall provide those spare parts and supplies that are specified in the TECHNICAL SPECIFICATIONS and those which are normally provided with the equipment or

material item. A separate master list shall be provided for these items upon turnover to the Government of the parts and supplies.

n. Maintenance Schedule: A separate schedule of all required periodic maintenance shall be included. This schedule shall list by frequency of occurrence all lubricants and special adjustments required. The types and amounts of lubrication must be specified. The Contractor shall verify that the furnished maintenance schedule agrees with the published manufacturer's data.

3.3.4.1 Architectural/General O&M:

(1) Building Products, Applied Materials, and Finishes: Include product data, with catalog number, size, composition, and color and texture designations. Provide information for re-ordering custom manufactured products. Data shall include, but not be limited to, information on carpet, floor tile, vinyl wall finishes, builder's hardware, etc.

(2) Instructions for Care and Maintenance: Include manufacturer's recommendations for cleaning agents and methods, precautions against detrimental agents and methods, and recommended schedule for cleaning and maintenance.

(3) Moisture-protection and Weather-exposed Products: Include product data listing applicable reference standards, chemical composition, and details of installation. Provide recommendations for inspections, maintenance, and repair.

(4) Additional Requirements: As specified in individual specifications sections.

3.3.4.2 Warranties:

In addition to the general warranty required by the contract, the O&M manuals shall include any specific warranties required by other sections of the TECHNICAL SPECIFICATIONS and other warranties normally provided with the particular piece of equipment or system. Extended warranties normally provided by manufacturers that are beyond the warranty of construction shall be specifically noted. The O&M manuals shall also include a specific warranty section itemizing all standard and extended warranty items. The warranty list shall be as indicated below. Warranties will not begin until the facility is accepted by the Contracting Officer. Copy of warranty shall be included in the manual.

WARRANTY INFORMATION

Project Title
Contract Number

General Contractors Name, Phone Number

ITEM DESCRIPTION	START DATE	END DATE	O & M REFERENCE LOCATION
(in alphabetical order)			

Descriptive Name,
Manufactures/
Warrantors Name
Address & Phone No.

3.3.4.3 Installed Equipment Lists:

A copy of the completed Equipment in Place forms required in Section 01705 EQUIPMENT-IN-PLACE - LIST shall be included in the manual. The completed forms shall be located at the front of the catalog and O&M data for the equipment listed on the form.

3.3.4.4 Data Layout:

(1) Data Identification: Catalog data shall be marked to clearly identify pertinent data by highlighting the data with pointers or crossing out all nonpertinent data.

(2) Drawings: All drawings bound in the manuals shall be of such size that will require only one fold made right to left. All larger size drawings shall be inserted into a separate pocket in the required location in the manual. All drawings shall be of microfilm quality.

(3) Posted Data: The Contractor shall provide posted data for equipment or systems, in addition to O&M manuals, and as required by other Technical Specifications sections. The data shall consist of as-built schematics of all wiring, controls, piping, etc., as necessary for the operation of the equipment or system, and a condensed typewritten description of the system. The posted data may include approved shop drawings, layout drawings, riser, and block diagrams and shall indicate all necessary interrelation with other equipment and systems. The data may be presented in one or several frames, under glass or sheet acrylic glazing, for clarity and convenience of location. The framed data presentation and outline shall be acceptable to and posted at locations designated by the Contracting Officer. The data shall be posted before personnel training or performance testing acceptance for the related items of equipment or system.

(4) Framed Instructions: Typewritten instructions, framed under glass or sheet acrylic glazing, explaining equipment or system prestart checkout, startup, operations and shutdown procedures, safety precautions, preventive maintenance procedures, and normal operation checks for satisfactory performance of the equipment of systems shall be posted in conjunction with the posted data. The framed instructions may be presented in one or several frames for clarity and convenience of location. The instruction presentation and outline shall be acceptable to the Contracting Officer prior to posting, and shall be posted at locations designated by the Contracting Officer. All framed instructions shall be posted before personnel training or performance testing acceptance commences for the related item of equipment or system.

3.3.5 Checklist

Contractor shall complete and initial a copy of the O&M Manual Check List which is provided at the end of this section, and forwarded along with ENG form 4025 as part of the O&M Manual submittal to the Contracting Officer for approval.

O&M MANUAL - REVIEW CHECKLIST

___ Does the manual cover all equipment furnished under the contract? (Review against equipment schedules on the drawings and/or equipment submittals.)

___ Does the manual clearly highlight all relevant portions or cross out all irrelevant portions of catalog data?

___ Does the manual contain operations data for the equipment? (Step-by-step operating instructions, start up procedures, sequences of operation, precautions.)

___ Does the manual contain maintenance and repair data for the equipment? (Lubrication, dismantling, assembly, adjustment, troubleshooting.)

___ Does the manual contain a separate maintenance schedule listed by frequency of occurrence?

___ Does the manual contain parts lists or parts catalogs for the equipment? Parts catalog or list shall contain identification, part numbers, recommended parts to be stocked, and local source of parts.

Does the manual contain electrical connection diagrams?

____Does the manual contain control and interlock system diagrams where applicable?

Is every page in the manual numbered and an index provided for ready reference to the data?

Is the cover hard (nonflexible) with the facility name, identification number, location, and system embossed on both the spine and cover? Is the Contractor's name and address, and the contract title and contract number embossed on the inside of the manual cover?

Is the binding screw posts or sliding post?

___ Is any of the data in the manual under the binding where it cannot be seen?

___ Do three sets of manuals contain all original data sheets and are others clearly legible?

Are system layout drawings provided? (Simplified diagrams for the system as installed.)

___ Are all drawings in the manual of such a size that requires one fold right to left, or if a larger size drawing, then inserted into a pocket in the manual?

Note that the above are common requirements to all contracts. Check the specific contract for additional information.

END OF SECTION

SECTION 01702

AS BUILT RECORDS AND DRAWINGS

PART 1 GENERAL

1.1 SUBMITTALS

Data listed in PART 3 of this section shall be submitted in accordance with section 01330 SUBMITTAL PROCEDURES. Due dates shall be as indicated in applicable paragraphs and all submittals shall be completed before final payment will be made.

PART 2 PRODUCTS (NOT APPLICABLE)

PART 3 EXECUTION

3.1 AS-BUILT FIELD DATA

3.1.1 General

The Contractor shall keep at the construction site two complete sets of full size blueline prints of the contract drawings, reproduced at Contractor expense, one for the Contractor's use, one for the Government. During construction, both sets of prints shall be marked to show all deviations in actual construction from the contract drawings. The color red shall be used to indicate all additions and green to indicate all deletions. The drawings shall show the following information but not be limited thereto:

a. The locations and description of any utility lines and other installations of any kind or description known to exist within the construction area. The location includes dimensions and/or survey coordinates to permanent features.

b. The locations and dimension of any changes within the building or structure, and the accurate location and dimension of all underground utilities and facilities.

c. Correct grade or alignment of roads, structures, and utilities if any changes were made from contract plans.

d. Correct elevations if changes were made in site grading from the contract plans.

e. Changes in details of design or additional information obtained from working drawings specified to be prepared and/or furnished by the Contractor including, but not limited to, fabrication erection, installation, and placing details, pipe sizes, insulation material, dimensions of equipment foundations, etc.

f. The topography and grades of all drainage installed or affected as part of the project construction.

g. All changes or modifications from the original design and from the final inspection.

h. Where contract drawings or specifications allow options, only the option actually used in the construction shall be shown on the as-built drawings. The option not used shall be deleted.

These deviations shall be shown in the same general detail utilized in the contract drawings. Marking of the prints shall be pursued continuously during construction to keep them up to date. In addition, the Contractor shall maintain full size marked-up drawings, survey notes, sketches, nameplate data, pricing information, description, and serial numbers of all installed equipment. This information shall be maintained in a current condition at all times until the completion of the work. The resulting field-marked prints and data shall be referred to and marked as "As-Built Field Data," and shall be used for no other purpose. They shall be made available for inspection by the Contracting Officer's representative whenever requested during construction and shall be jointly inspected for accuracy and completeness by the Contracting Officer's representative and a responsible representative of the Contractor prior to submission of each monthly pay estimate. Failure to keep the As-Built Field Data (including Equipment-in-Place lists) current shall be sufficient justification to withhold a retained percentage from the monthly pay estimate.

3.1.2 Submittal of the As-Built Field Data

Two sets of the As-Built Field Data shall be submitted to the Contracting Officer for review and approval a minimum of 20 calendar days prior to the date of final inspection. If review of the preliminary as-built drawings reveals errors and/or omissions, the drawings will be returned to the Contractor for corrections. The Contractor shall make all corrections and return the drawings for backcheck to the Contracting Officer within 10 calendar days of receipt. When submitted drawings are accepted, one set of marked drawings will be returned to the Contractor for the completion of the as-built drawings.

3.2 AS-BUILT ELECTRONIC FILE DRAWINGS

3.2.1 No earlier than 30 days after award the Government will have available for the Contractor one set of Bentley MicroStation electronic file format contract drawings and their support and documentation files, to be used for preparation of as-built drawings. The electronic files will be available on either 89 mm (3-1/2 inch) 1.44 MB floppy disks or ISO-9660 CD-ROM, as directed by the Contracting Officer. The Contractor has 30 days after the receipt of the electronic files to verify the usability of the MicroStation files, and bring any discrepancies to the attention of the Contracting Officer. Any discrepancies will be corrected within 15 days and files returned to the Contractor**.** The Contractor shall incorporate all deviations from the original contract drawings as recorded in the approved 'As-built Field Data' (see paragraph 3.1.2). The Contractor shall also incorporate all the written modifications to the contract drawings which were issued by amendment or contract modification. All revisions and changes shall be incorporated, i.e. items marked "deleted" shall be deleted, clouds around new items shall be removed, etc.

3.2.2 No later than 30 days after final acceptance a complete set of as-built drawings shall be submitted in electronic file format. The electronic file format, leveling standards and submittal requirements are specified in paragraphs below. The as-built drawings shall be done in a quality equal to that of the originals. Line work, line weights, lettering, and use of symbols shall be the same as the original line work, line weights, lettering, and symbols. If additional drawings are required they shall be prepared in electronic file format under the same guidance. When final revisions have been completed, each drawing shall be identified with the words "AS-BUILT" in block letters at least 3/8-inch high placed above the title block if space permits, or if not, below the title block between the border and the trim line. The date of completion and the words "REVISED AS-BUILT" shall be placed in the revision block above the latest revision notation.

3.2.3 Electronic File Submittal Requirements

3.2.3.1 The electronic drawing file(s) deliverable shall be submitted in two formats:

a. Sitework, utilities, and other horizontal construction in Bentley MicroStation 'DGN' binary format.

b. Buildings and other vertical construction in AutoCad release 14 'DWG' binary format.

All support files required to display or plot the file(s) in the same manner as they were developed shall be delivered along with the files. These files include but are not limited to Font files, Menu files, Plotter Setup, and Referenced files.

It is the Contractor's responsibility to translate the Microstation files to AutoCad files for those contract drawings for which as-builts in AutoCad format are required. The AutoCad files shall be "bound" (merged).

3.2.3.2 Leveling shall remain as provided in the electronic files. An explanatory list of which levels are used in each drawing, including any additional levels needed to complete incorporation of the As-Built data, shall be provided with each submittal.

3.2.3.3 Electronic File Deliverable Media: All electronic files shall be submitted on ISO 9660 format CD-ROM (CD). ZIP drive disks shall not be provided. Two complete sets of CD(s) shall be submitted along with one complete set of prints and one complete set of mylars, taken from the CD(s). The prints and mylars are to be submitted only after corrections are made, if any. See paragraph 3.2.4 below. Each CD shall have a clearly marked label stating the Contractor's firm name, project name and location, submittal type (AS-BUILT), and date the CD was made. Each submittal shall be accompanied by a hard copy transmittal sheet that contains the above information along with tabulated information about all files submitted, as shown below:

Electronic File Name	Plate Number	Drawing Title

Electronic version of the table shall be included with each submittal set of disks.

3.2.4 Submittal of the Final As-Built Drawings

The final as-built record drawings shall be completed and returned together with the approved preliminary as-built drawings to the COE, Seattle District Office, Technical Branch, Records and Information Section, within 30 calendar days of final acceptance. All drawings from the original contract drawing set shall be included, including the drawings where no changes were made. The Government will review all final as-built record drawings for accuracy and conformance to the drafting standards and other requirements contained in DIVISION 1 GENERAL REQUIREMENTS. The drawings will be returned to the Contractor if corrections are necessary. The Contractor shall make all corrections and shall return the drawings to the same office within 7 calendar days of receipt.

3.3 All costs incurred by the Contractor in the preparation and furnishing of as-built drawings in electronic file format shall be included in the contract price and no separate payment will be made for this work. Approval and acceptance of the final as-built record drawings shall be accomplished before final payment is made to the Contractor.

3.4 One set of marked-up as-built blueline prints shall be furnished at the time of system acceptance testing. These as-built blueline prints shall be in addition to the submittals of marked-up as-built blueline prints specified elsewhere in the contract.

END OF SECTION

SECTION 01703

WARRANTY OF CONSTRUCTION

PART 1 GENERAL

1.1 SUBMITTALS

Submittals shall be made in accordance with SECTION 01330: SUBMITTAL PROCEDURES. Submittal dates shall be as defined in PART 3 of this section.

PART 2 PRODUCTS (NOT APPLICABLE)

PART 3 EXECUTION

3.1 WARRANTY OF CONSTRUCTION (APR 1984) (FAR52.246-21):

3.1.1 In addition to any other warranties in this contract, the Contractor warrants, except as provided in paragraph 3.1.9 of this Clause, that work performed under this contract conforms to the contract requirements and is free of any defect in equipment, material, or design furnished, or workmanship performed by the Contractor or any subcontractor or supplier at any tier.

3.1.2 This warranty shall continue for a period of 1 year from the date of final acceptance of the work. If the Government takes possession of any part of the work before final acceptance, this warranty shall continue for a period of 1 year from the date the Government takes possession.

3.1.3 The Contractor shall remedy at the Contractor's expense, any failure to conform, or any defect. In addition, the Contractor shall remedy, at the Contractor's expense, any damage to Government-owned or controlled real or personal property, when that damage is the result of:

a. the Contractor's failure to conform to contract requirements or

b. any defect of equipment, material, workmanship, or design furnished.

3.1.4 The Contractor shall restore any work damaged in fulfilling the terms and conditions of this clause. The Contractor's warranty with respect to work repaired or replaced will run for 1 year from the date of repair or replacement.

3.1.5 The Government will notify the Contractor, in writing or by telephone, after the discovery of any failure, defect, or damage and the Contractor shall respond and be on-site to investigate the problem within 1 working day after notification. The Contractor shall furnish, and maintain, a 24 hour emergency telephone number as the point of contact. For failures, defects, or damage causing loss of power or heat, the Contractor shall respond and mitigate problem within 4 hours.

3.1.6 If the Contractor fails to remedy any failure, defect, or damage within 5 working days after receipt of notice, the Government will have the right to replace, repair, or otherwise remedy the failure, defect, or damage at the Contractor's expense.

3.1.7 With respect to all warranties, express or implied, from subcontractors, manufacturers, or suppliers for work performed and materials furnished under this contract, the Contractor shall:

a. obtain all warranties that would be given in normal commercial practice;

b. require all warranties to be executed, in writing, for the benefit of the Government, if directed by the Contracting Officer; and

c. enforce all warranties for the benefit of the Government, if directed by the Contracting Officer.

3.1.8 In the event the Contractor's warranty under paragraph 3.1.2 of this clause has expired, the Government may bring suit at its expense to enforce a subcontractor's, manufacturer's, or supplier's warranty.

3.1.9 Unless a defect is caused by the negligence of the Contractor or subcontractor or supplier at any tier, the Contractor shall not be liable for the repair of any defects of material or design furnished by the Government nor for the repair of any damage that results from any defect in Government-furnished material or design.

3.1.10 This warranty shall not limit the Government's rights under the Inspection of Construction clause of this contract with respect to latent defects, gross mistakes, or fraud.

3.1.11 After final acceptance of the work, the Contractor shall furnish and install an Equipment Warranty Sticker on Contractor-installed equipment. (Same equipment as listed on the Equipment-In-Place List required under Section 01705 EQUIPMENT-IN-PLACE LIST). Lettering shall be block-type upper case and easily readable. Sticker shall be of a durable type material and of a type that can be written on. Sticker shall state the following:

a. The title "Equipment Warranty."

b. Contractor's name and Contract Number.

c. Date warranty expires.

d. Point of contact, including name and telephone number.

e. Manufacturer.

END OF SECTION

SECTION 01704

FORM 1354 CHECKLIST

PART 1 GENERAL

1.1 Procedures

The form which is a part of this specification section shall be completed for any project having revisions to real property. The following page contains the basic instructions applicable to the form.

1.2 Submittal

This form shall be submitted for approval, and be approved a minimum of 30 days before final inspection of the project. Failure to have this form completed and approved in time for the final inspection will result in delay of the inspection until the checklist is completed.

PARTS 2 AND 3 NOT USED

INSTRUCTIONS FOR DD FORM 1354 CHECKLIST

The following checklist is only a guide to describe various parts of new and modified construction. Alter this form as necessary or create your own document to give complete accounting of the real property added or deleted for this contract. All items added, deleted, replaced, or relocated within the building 1.5 meter, or on site 1.5 meters beyond the building perimeter must be accounted for completely. Only a few of the most common items beyond the 1.5 meter line are included on the checklist under UTILITIES/SURFACE CONSTRUCTION, add additional items as required by the construction accomplished.. Attach a continuation sheet and use the checklist format to describe other work related to this particular project. Listed on the last page are additional items with units of measure and descriptive terms.

Costs for each item must include material, tax, installation, overhead and profit, bond and insurance costs. This form should be filled out as each item is installed or each phase of work is completed.

TOTAL FOR ALL ITEMS INCLUDING CONTRACT MODIFICATION COSTS ADDED TOGETHER SHOULD EQUAL THE TOTAL CONTRACT PRICE.

NOTE: USE METRIC UNITS OF MEASURE INSTEAD OF ENGLISH UNITS SHOWN.

KEY TO ABBREVIATIONS

AC - Acres
BL - Barrels, Capacity
BTU - British Thermal Unit
CY - Cubic Yards
EA - Each
GA - Gallons, Capacity
HD - Head
KV - Kilovolt-Amperes, Capacity (KVA)
KW - Kilowatts, Capacity
SE - Seats
SF - Square Feet
SY - Square Yard
MB - Million British Thermal Units
MI - Miles
LF - Linear Feet
KG - Thousand Gallons Per Day, Capacity
TN - Ton
- Number; How Many

DD FORM 1354 CHECKLIST
Transfer of Real Property

CONTRACT NUMBER:_____

CONTRACT TITLE:_____

LOCATION:_____

1. **DEMOLITION** (Describe each item removed and the cost of removal.)*

2. **RELOCATION** (Describe each item relocated and the cost of relocation.)*

3. **REPLACEMENTS** (Describe each item replaced and replacement cost.)*

*Use a continuation sheet if more space is required. Items should be described by quantity and the correct unit of measure.

4. **NEW CONSTRUCTION OVERVIEW: BUILDING(S)/ADDITION(S) TO A BUILDING -** Use a separate checklist for each building and/or addition.

(1) **Outside Dimensions: Length x Width**

(a) Main Building_____
(b) Offsets_____
(c) Wings_____
(d) Basement_____
(e) Attic_____

(2) **Number of Usable Floors**: _____

(3) **Construction: Exterior Materials Used**

(a) Foundation (such as concrete)_____
(b) Floors (such as wood, concrete)_____
(c) Walls (such as wood siding, metal, CMU)_____
(d) Roof (such as metal, comp., built-up)_____

(4) **Utilities ENTERING Building**: Measure lineal meters (LF) from Bldg entry to next larger size of pipe

(a) Water (size & type of pipe; number of lineal meters (LF)_____
(b) Gas (size & type of pipe; number of lineal meters (LF)_____
(c) Sewer (size & type of pipe; number of lineal meters (LF)_____
(d) Electric (phase, voltage, size & type of wire, connected load in amps_____

(5) **Air Conditioning**:

(a) Type_____
(b) Capacity Kilograms (TONS)_____
(c) SQ METERS (SQ YDS) covered by system_____

(6) **Heating**:

(a) Source_____
(b) Fuel_____

(7) **Hot Water Facilities**:

(a) Capacity Liters (GAL)_____
(b) Temperature Rise_____

BUILDING COST:_____

5. **BUILDING SYSTEMS (INTERIOR)**

A. **FIRE PROTECTION**:
Property Code
(1) (880 50/880-211) CLOSED HEAD AUTO SPRINKLERS - Square Meters (SF) & HD (wet or dry pipe; # of Lineal Meters (LF) of service pipe; type of pipe & # of heads; # of Square Meters (SF) covered by system)
DESCRIPTION:
_____
_____
_____
COST: _____

(2) (880 50/880-212) OPEN HEAD DELUGE SYSTEM - Square Meters (SF) & HD (# of Lineal Meters (LF) of service pipe; type of pipe; # of heads; # of Square Meters (SF) covered)
DESCRIPTION:
_____
_____
_____
COST: _____

(3) (880 10/880-221) AUTO FIRE DETECTION SYSTEM - Square Meters (SF) & EA (# of alarms-horns, bells, etc.; # of smoke detectors; # of heat detectors; # of fire alarm panels; # of radio transmitters/antennae)
DESCRIPTION:
_____
_____
_____
COST: _____

(4) (880 20/880-222) MANUAL FIRE ALARM SYSTEM - EA (# of pull stations; # of alarm horns; # of fire extinguisher cabinets)
DESCRIPTION:
_____
_____
_____
COST: _____

(5) (880 60/880-231) CO2 FIRE SYSTEM (# of bottles & size of bottles in kilograms (lbs))
DESCRIPTION:

_____
_____
_____

COST: _____

(6) (880 60/880-232) FOAM FIRE SYSTEM - EA (# of tanks - capacity in kilograms (lbs))
DESCRIPTION:

_____
_____
_____

COST: _____

(7) (880 60/880-233) OTHER FIRE SYSTEM - EA
DESCRIPTION:

_____
_____
_____

COST: _____

(8) (880 60/880-234) HALON 1301 FIRE SYSTEM - EA (# of bottles & size of bottles in kilograms (lbs))
DESCRIPTION:

_____
_____
_____

COST: _____

B. **SECURITY**:

(1) (880 40/872-841) SECURITY ALARM SYSTEM - EA (name of system installed)
DESCRIPTION:

_____
_____
_____

COST: _____

C. **HEATING/COOLING SYSTEMS**

(1) (826 10/890-126) A/C WINDOW UNITS - kilograms (TN) & Square Meters (SF)-(# of units installed; amount of Square Meters (SF) covered per unit; size & capacity of each unit)
DESCRIPTION:

_____
_____
_____

COST: _____

(2) (826 14/890-125) A/C PLT LESS THAN 4,536 kilograms (5 TN) - kilograms (TN) & square meters (SF)-(# of kilograms (TN); # of square meters (SF) covered)
DESCRIPTION:
_____
_____
COST: _____

(3) (826 13/890-121) A/C PLT 4,536 to 22,680 kilograms (5 TO 25 TN) - kilograms (TN)-(# of kilograms (TN); # of square meters (SF) covered)
DESCRIPTION:
_____
_____
_____
COST: _____

(4) (826 12/826-122) A/C PLT 22,680 to 2,267,962 kilograms (25 TO 100 TN) - kilograms (TN)-(# of kilograms (TN); # of square meters (SF) covered)
DESCRIPTION:
_____
_____
_____
COST: _____

(5) (826 11/826-123) A/C PLT OVER 2,267,962 kilograms (100 TN) - kilograms (TN)-(# of kilograms (TN); # of square meters (SF) covered)
DESCRIPTION:
_____
_____
_____
COST: _____

(6) (821 33/821-115) HEATING PLT 220/1026 W (750/3500 MB) - W (MB)-(# of kW (MBH); type of heating system - Ex: Warm air furnace, central)
DESCRIPTION:
_____
_____
_____
COST: _____

(7) (821 32/821-116) HEATING PLT OVER 1026 W (3500 MB) - W(MB)-(# of kW (MBH); type of heating system)
DESCRIPTION:
_____
_____
COST: _____

(8) (811 60/811-147) ELEC EMERGENCY POWER GENERATOR-KW-(size of engine; rating of generator in kilowatts & voltage)
DESCRIPTION:
_____
_____
_____
COST: _____

(9) (81190 or 82320-gas) STORAGE TANK FOR HEATING or GENERATOR FUEL-Liters (GA); TYPE; FUEL-(Size, type of tank, kind of fuel & # of liters (gallons))
DESCRIPTION:
_____
_____
_____
COST: _____

SITE WORK

6. **UTILITIES/SURFACE CONSTRUCTION**:

(1) (812 41/812-223) PRIM DISTR LINE OH-Lineal Meters (LF)-(# Lineal Meters (LF) of wire; size & type of wire; # of poles; voltage)
DESCRIPTION:
_____
_____
_____
COST: _____

(2) (812/81360) TRANSFORMERS-KVA
POWER POLES-Lineal Meters (LF)
(# poles; # transformers - pad or pole mounted; KVA of wire; # Lineal Meters (LF) of wire)
DESCRIPTION:
_____
_____
_____
COST: _____

(3) (812 40/812-224) SEC DISTR LINE OH-Lineal Meters (LF)-(voltage; size & type of wire; # transformers; KVA; # Lineal Meters (LF) of wire; # of service drops; # poles)
DESCRIPTION:
_____
_____
_____
COST: _____

(4) (812 42/812-225) PRIM DISTR LINE UG-Lineal Meters (LF)-(KVA; voltage; type of conduit & size(encased or direct burial); size & kind of wire inside conduit; Lineal Meters (LF) of wire & conduit)
DESCRIPTION:
_____
_____
_____
COST: _____

(5) (812 42/812-226) SEC DISTR LINE UG-Lineal Meters (LF)-(type of conduit & size; type & size of wires in conduit; Lineal Meters (LF) of conduit & wire inside conduit; voltage)
DESCRIPTION:
_____
_____
_____
COST: _____

(6) (812 30/812-926) EXTERIOR LIGHTING-EA-(streets or parking area lights) (# & type of lights; whether pole mounted or not; # Lineal Meters (LF) of connecting wire if pole mounted)
DESCRIPTION:
_____
_____
_____
COST: _____

(7) (824 10/824-464) GAS MAINS-Lineal Meters (LF) (size, type, & # of Lineal Meters (LF) of pipe)
DESCRIPTION:
_____
_____
_____
COST: _____

(8) (831 90/831-169) SEWAGE SEPTIC TANK-thousand liters (KG)-(size, kind of material, & capacity)
DESCRIPTION:
_____
_____
_____
COST: _____

(9) (832 10/832-266) SANITARY SEWER-Lineal Meters (LF)-(sizes & types of pipes - # of Lineal Meters (LF) of each; # of cleanouts; # & size of manholes)
DESCRIPTION:
_____
_____
_____
COST: _____

(10) (842 10/842-245) WATER DISTR MAINS (POTABLE)-Lineal Meters (LF)-(# Lineal Meters (LF) & size, type of pipe)
DESCRIPTION:
_____
_____
_____
COST: _____

(11) (843 11/843-315) FIRE HYDRANTS-EA-(#; size & type)
DESCRIPTION:
_____
_____
_____
COST: _____

(12) (851 90/851-143) CURBS & GUTTERS-Lineal Meters (LF)-(# Lineal Meters (LF); material; width & height)
DESCRIPTION: (Is curb extruded or standard?)_
_____
_____
_____
COST: _____

(13) (851 90/851-145) DRIVEWAY-Square Meters (SY)-Square Meters (SY); material used; thickness)
DESCRIPTION:
_____
_____
_____
COST: _____

(14) (851 10/12/851-147) ROAD-Square Meters (SY) & Lineal Meters (LF)-Square Meters (SY); material used; thickness; Lineal Meters (LF))
DESCRIPTION:
_____
_____
_____
COST: _____

(15) (85210/11 /852-262) VEHICLE PARKING-Square Meters (SY)-Square Meters (SY); material used; thickness; # of bollards; # of wheel stops; # of regular parking spaces; # of handicap spaces)
DESCRIPTION:
_____
_____
_____
COST: _____

(16) (852 20/852-289) SIDEWALKS-Square Meters (SY) & Lineal Meters (LF)-(# Square Meters (SF) & Lineal Meters (LF); dimensions of each section & location; thickness; material used)
DESCRIPTION:
_____
_____
_____
COST: _____

(17) (871 10/871-183) STORM DRAIN DISPOSAL-Lineal Meters (LF)-(# Lineal Meters (LF) of pipe; sizes & types of pipe; # of catch basins & manholes & sizes of each)
DESCRIPTION:
_____
_____
_____
COST: _____

(18) (872 15/872-247) FENCE, SECURITY (ARMS)-Lineal Meters (LF)-(# of Lineal Meters (LF); fence material; # & type of gate(s); # strands of barbed wire on top)
DESCRIPTION:
_____
_____
_____
COST: _____

(19) (87210/12/872-248) FENCE, INTERIOR-Lineal Meters (LF)-(# of Lineal Meters (LF); fence material; # & kind of gate(s)
DESCRIPTION:
_____
_____
_____
COST: _____

(20) (890 70/890-187) UTILITY VAULT(4 or more transformers)- Square Meters (SF) (# Square Meters (SF); dimensions of vault; # of transformers)
DESCRIPTION:
_____
_____
_____
COST: _____

(21) (135 10/135-583) TEL DUCT FACILITY-Lineal Meters (LF)-(# of Lineal Meters (LF); size & type of conduit; type of wire)
DESCRIPTION:
_____
_____
_____
COST: _____

(22) (135 10/135-586) TEL POLE FACILITY-Lineal Meters (LF)-(# Lineal Meters (LF) & type of wire; # of poles)
DESCRIPTION:
_____
_____
_____
COST: _____

7. **INSTALLED EQUIPMENT**: Furnish an Equipment-In-Place List. Any price related to equipment should already be included in this checklist.

8. **SYSTEMS NOT PREVIOUSLY LISTED**: Attach a separate sheet and use the same format to describe the system(s). Example: CATV system, intercom system, or other utilities and surface construction not described on this checklist.

9. **ASBESTOS REMOVAL**: Furnish a description by building of the number of Lineal Meters (LF) of asbestos removed, number of Lineal Meters (LF) of reinsulation, number of Square Meters (SF) of soil encapsulation, and number and size of tanks, etc., where asbestos was removed. Also, identify buildings by their numbers and use.

10. **MAINTENANCE/RENOVATIONS**: List by building number and describe all additions and deletions by quantity and the correct unit of measure. Furnish a cost per building.

UTILITIES/SURFACE CONSTRUCTION - Listed below are some additional items which may or may not apply to your contract. EACH item installed on site should be listed and priced separately even if not included on this checklist.

(1) IRRIGATION SYSTEM(-Lineal Meters (LF) of pipe; size & type of pipe; number and type of heads)
(2) UNDERGROUND/ABOVEGROUND STORAGE TANKS(-Liters (GA), type of tank; material stored)
(3) (833-354) DUMPSTER ENCLOSURE(-Square Meters (SF) & dimensions)
(4) (890-152) UNLOADING PAD(-Square Meters (SY); material)
(5) SIGNAGE-(Dimensions; material)
(6) (12580) CATHODIC PROTECTION(kilometers; Lineal Feet) (MI; LF)
(7) (87270 LIGHTNING PROTECTION-Lineal Feet (LF)
(8) (81290) POLE DUCT RISER(-Lineal Feet (LF, type of material)
(9) RAMPS-Square Meters (SF), material; Cubic Meters (CY) if concrete-use code for sidewalk if concrete)
(10) (89080/890-158) LOAD AND UNLOAD PLATFORM-Square Meters (SF)
(11) (83240/832-255) INDUSTRIAL WASTE MAIN-Lineal Meters (LF)
(12) WHEEL STOPS-(EA; size & material)
(13) (81350) OUTDOOR INTEGRAL DISTR CTR-(KVA)
(14) (45110) OUTDOOR STORAGE AREA-Square Meters (SF)
(15) (73055/730-275) BUS/WAIT SHELTER-Square Meters (SF)
(16) (690-432) FLAGPOLE-(EA; dimensions)
(17) (93210) SITE IMPROVEMENT-(JOB)
(18) (93220) LANDSCAPE PLANTING (Hectare (Acre); EA; Square Meters (SF))
(19) (93230) LANDSCAPE BERMS/MOUNDS-Square Meters (SY)
(20) (93410) CUT AND FILL-Cubic Meters (CY)
(21) (843-315) FIRE HYDRANTS-(EA; Type)
(22) (14970) LOADING AND UNLOADING DOCKS AND RAMPS (not connected to a Bldg)-Square Meters (SF) (23) BICYCLE RACK-(EA)
(24) (85140/812-928) TRAFFIC SIGNALS-(EA)
(25) (87210) FENCING OR WALLS-Lineal Meters (LF)
(26) (15432) RIPRAP-Lineal Meters & Square Meters (LF & SY)
(27) (75061) GRANDSTAND OR BLEACHERS-(EA; SE)
(28) 87150/871-187) RETAINING WALLS-Lineal Meters; Square Meters (LF; SY); material

NOTE: 5 Digit Codes-Army; 6 Digit Codes-Air Force

END OF SECTION

This page intentionally blank

SECTION 01705

EQUIPMENT-IN-PLACE LIST

PART 1 GENERAL

1.1 SUBMITTALS

Data listed in PART 3 of this section shall be submitted in accordance with section 01330 SUBMITTAL PROCEDURES. Due dates shall be as indicated in applicable paragraphs and all submittals shall be completed before final payment will be made.

PART 2 PRODUCTS (NOT APPLICABLE)

PART 3 EXECUTION

3.1 Submittal:

The final equipment-in-place list shall be completed and returned to the Contracting Officer within 30 calendar days of the final inspection. The Contracting Officer will review all final Equipment-In-Place Lists for accuracy and conformance to the requirements contained in DIVISION 1 GENERAL REQUIREMENTS. The lists shall be returned to the Contractor if corrections are necessary. The Contractor shall make all corrections and shall return the lists to the Contracting Officer within 7 calendar days of receipt.

3.2 EQUIPMENT-IN-PLACE LIST:

Contractor shall submit for approval, at the completion of construction, a list of equipment-in-place. This list shall be updated and kept current throughout construction, and shall be jointly inspected for accuracy and completeness by the Contracting Officer's representative and a responsible representative of the Contractor prior to submission of each monthly pay estimate. A sample form showing minimum data required is provided at the end of this section. The EQUIPMENT-IN-PLACE LIST shall be comprised of all equipment falling under one or more of the following classifications:

a. Each piece of equipment listed on the mechanical equipment schedules.
b. Each electrical panel, switchboard, and MCC panel.
c. Each transformer.
d. Each piece of equipment or furniture designed to be movable.
e. Each piece of equipment that contains a manufacturer's serial number on the name plate.
f. All Government furnished, Contractor installed equipment per a. through e. (price data excluded)

EQUIPMENT-IN-PLACE LIST

CONTRACT NO.: _____

Specification Section: _____ Paragraph No. _____

ITEM DESCRIPTION: _____

Item Name: _____

Serial Number: _____

Model Number: _____

Capacity: _____Replacement Cost _____

ITEM LOCATION:

Building Number: _____ Room Number: _____

or Column Location: _____

MANUFACTURER INFORMATION:

Manufacturer Name: _____

Trade Name (if different from item name): _____

Manufacturer's Address: _____

_____

Telephone Number: _____

WARRANTY PERIOD: _____

CHECKED BY: _____

END OF SECTION

SECTION 02220

DEMOLITION

PART 1 GENERAL

1.1 REFERENCES

The publications listed below form a part of this specification to the extent referenced. The publications are referred to in the text by basic designation only.

ENGINEERING MANUALS (EM)

EM 385-1-1	(1996) U.S. Army Corps of Engineers Safety and Health Requirements Manual

1.2 GENERAL REQUIREMENTS

The work includes demolition, salvage of identified items and materials, and removal of resulting rubbish and debris. Rubbish and debris shall be removed from Government property daily, unless otherwise directed, to avoid accumulation at the demolition site. Materials that cannot be removed daily shall be stored in areas specified by the Contracting Officer. In the interest of occupational safety and health, the work shall be performed in accordance with EM 385-1-1, Section 23, Demolition, and other applicable Sections. In the interest of conservation, salvage shall be pursued to the maximum extent possible; salvaged items and materials shall be disposed of as specified.

1.3 SUBMITTALS

Government approval is required for submittals with a "GA" designation; submittals having an "FIO" designation are for information only. The following shall be submitted in accordance with Section 01330 SUBMITTAL PROCEDURES:

SD-08 Statements

Work Plan; GA.

The procedures proposed for the accomplishment of the work. The procedures shall provide for safe conduct of the work, including procedures and methods to provide necessary supports, lateral bracing and shoring when required, careful removal and disposition of materials specified to be salvaged, protection of property which is to remain undisturbed, coordination with other work in progress, and timely disconnection of utility services. The procedures shall include a detailed description of the methods and equipment to be used for each operation, and the sequence of operations in accordance with EM 385-1-1.

1.4 DUST CONTROL

The amount of dust resulting from demolition shall be controlled to prevent the spread of dust to occupied portions of the construction site and to avoid creation of a nuisance in the surrounding area.

Use of water will not be permitted when it will result in, or create, hazardous or objectionable conditions such as ice, flooding and pollution.

1.5 PROTECTION

1.5.1 Protection of Personnel

During the demolition work the Contractor shall continuously evaluate the condition of the structure being demolished and take immediate action to protect all personnel working in and around the demolition site. No area, section, or component of floors, roofs, walls, columns, pilasters, or other structural element will be allowed to be left standing without sufficient bracing, shoring, or lateral support to prevent collapse or failure while workmen remove debris or perform other work in the immediate area.

1.5.2 Protection of Structures

Floors, roofs, walls, columns, pilasters, and other structural components that are designed and constructed to stand without lateral support or shoring, and are determined to be in stable condition, shall remain standing without additional bracing, shoring, of lateral support until demolished, unless directed otherwise by the Contracting Officer. The Contractor shall ensure that no elements determined to be unstable are left unsupported and shall be responsible for placing and securing bracing, shoring, or lateral supports as may be required as a result of any cutting, removal, or demolition work performed under this contract.

1.5.3 Protection of Existing Property

Before beginning any demolition work, the Contractor shall survey the site and examine the drawings and specifications to determine the extent of the work. The Contractor shall take necessary precautions to avoid damage to existing items to remain in place, to be reused, or to remain the property of the Government; any damaged items shall be repaired or replaced as approved by the Contracting Officer. The Contractor shall coordinate the work of this section with all other work and shall construct and maintain shoring, bracing, and supports as required. The Contractor shall ensure that structural elements are not overloaded and shall be responsible for increasing structural supports or adding new supports as may be required as a result of any cutting, removal, or demolition work performed under this contract.

1.5.4 Protection From the Weather

The interior of buildings to remain; salvageable materials and equipment shall be protected from the weather at all times.

1.5.5 Protection of Trees

Trees within the project site which might be damaged during demolition, and which are indicated to be left in place, shall be protected by a 6 foot high fence. The fence shall be securely erected a minimum of 5 feet from the trunk of individual trees or follow the outer perimeter of branches or clumps of trees. Any tree designated to remain that is damaged during the work under this contract shall be replaced in kind or as approved by the Contracting Officer.

1.5.6 Environmental Protection

The work shall comply with the requirements of Section 01410 ENVIRONMENT PROTECTION.

1.6 BURNING

The use of burning at the project site for the disposal of refuse and debris will not be permitted.

1.7 USE OF EXPLOSIVES

Use of explosives will not be permitted.

1.8 AVAILABILITY OF WORK AREAS

Areas in which the work is to be accomplished will be available in accordance with SECTION: 1005, SITE SPECIFIC SUPPLEMENTARY REQUIREMENTS.

PART 2 PRODUCTS (NOT APPLICABLE)

PART 3 EXECUTION

3.1 EXISTING STRUCTURES

Existing structures indicated shall be removed in its entirety. Interior walls, other than retaining walls and partitions, shall be removed to top of concrete slab on ground. Basement slabs shall be broken up to permit drainage. Sidewalks, curbs, gutters and street light bases shall be removed as indicated.

3.2 UTILITIES

Disconnection of utility services, with related meters and equipment shall be as directed by the Contracting Officer. Existing utilities shall be removed as indicated. When utility lines are encountered that are not indicated on the drawings, the Contracting Officer shall be notified prior to further work in that area.

3.3 FILLING

Holes, open basements and other hazardous openings shall be filled in accordance with Section: 02300, EARTHWORK or 02315, EXCAVATION, FILLING, AND BACKFILLING FOR BUILDINGS, as applicable.

3.4 DISPOSITION OF MATERIAL

Title to material and equipment to be demolished, except Government salvage and historical items, is vested in the Contractor upon receipt of notice to proceed. The Government will not be responsible for the condition, loss or damage to such property after notice to proceed.

3.4.1 Salvageable Items and Material

Contractor shall salvage items and material to the maximum extent possible.

3.4.1.1 Material Salvaged for the Contractor

Material salvaged for the Contractor shall be stored as approved by the Contracting Officer and shall be removed from Government property before completion of the contract. Material salvaged for the Contractor shall not be sold on the site.

3.4.1.2 Items Salvaged for the Government

Salvaged items to remain the property of the Government shall be removed in a manner to prevent damage, and packed or crated to protect the items from damage while in storage or during shipment. Items damaged during removal or storage shall be repaired or replaced to match existing items. Containers shall be properly identified as to contents. The following items reserved as property of the Government as indicated on the plans shall be delivered to the Contracting Officer:

Three(3)pole mounted electrical transformers;

3.4.1.3 Items Salvaged for the Using Service (NOT APPLICABLE)

3.4.1.4 Historical Items

Historical items shall be removed in a manner to prevent damage. The following historical items shall be delivered to the Government for disposition: Corner stones, contents of corner stones, and document boxes wherever located on the site.

3.4.2 Unsalvageable Material

Concrete, masonry, and other noncombustible material, except concrete permitted to remain in place, shall be disposed of outside the limits of Government-controlled land and shall be the responsibility of the Contractor. Combustible material shall be disposed of outside the limits of Government-controlled land.

3.5 CLEAN UP

Debris and rubbish shall be removed from basement and similar excavations. Debris shall be removed and transported in a manner that prevents spillage on streets or adjacent areas. Local regulations regarding hauling and disposal shall apply.

3.6 PAVEMENTS

Existing pavements designated for removal shall be saw cut and removed in accordance with the details shown on the drawings and to the limits and depths indicated on the drawings.

END OF SECTION

SECTION 02300

EARTHWORK

PART 1 GENERAL

1.1 REFERENCES

The publications listed below form a part of this specification to the extent referenced. The publications are referred to in the text by basic designation only.

AMERICAN SOCIETY FOR TESTING AND MATERIALS (ASTM)

ASTM C 117	(1995) Test Method for Materials Finer Than 75-µm(No. 200) Sieve in Mineral Aggregates by Washing.
ASTM C 136	(1996) Method of Sieve Analysis of Fine and Corase Aggregates.
ASTM D 422	(1963, R1990) Test Method for Particle-Size Analysis of Soils.
ASTM D 1556	(1990, R1996)) Density of Soil In-Place by the Sand-Cone Method.
ASTM D 1557	(1991) Moisture-Density Relations of Soils and Soil-Aggregate Mixtures Using a 4.54-kilogram (kg) (10-lb) Rammer and 457-millimeters (mm) (18-inch) Drop. Laboratory Compaction Characteristics of Soil Using Modified Effort of 2,700 kN-m/cu.m. (56,000 ft-lbf/cu. ft.).
ASTM D 2167	(1994) Density and Unit Weight of Soil In-Place by the Rubber Balloon Method
ASTM D 2216	(1992) Laboratory Determination of Water (Moisture) Content of Soil and Rock.
ASTM D 2217	(1985) Wet Preparation of Soil Samples for Particle-Size Analysis and Determination of Soil Constants.
ASTM D 2487	(1993) Standard Classification of Soils for Engineering Purposes (Unified Soil Classification System).
ASTM D 2922	(1996) Density of Soil and Soil-Aggregate in Place by Nuclear Methods (Shallow Depth).
ASTM D 3017	(1996) Water Content of Soil and Rock in Place by Nuclear Methods (Shallow Depth).

ASTM D 3740 (1996) Standard Practice for Minimum Requirements for Agencies Engaged in the Testing and/or Inspection of Soil and Rock as Used in Engineering Design and Construction.

ASTM D 4318 (Rev. A, 1995) Liquid Limit, Plastic Limit and Plasticity Index of Soils

1.3 DEFINITIONS

1.3.1 Satisfactory Materials

Materials classified in ASTM D 2487 as GW, GP, SW, and SP, and free from roots and other organic matter, trash, debris, and frozen materials and stones larger than 150 mm in any dimension are satisfactory. Materials classified as SP-SM, SM, or GP-GM are also satisfactory provided that they contain moisture contents suitable for the intended use. Black organic-rich silty gravels (GM) are satisfactory for open, seeded, or turfed areas only provided the moisture contents are suitable for the intended use.

1.3.2 Unsatisfactory Materials

Materials which do not comply with the requirements for satisfactory materials are unsatisfactory. Materials classified in ASTM D 2487 as PT, OH, and OL are unsatisfactory. Unsatisfactory materials also include man-made fills, refuse, or backfills from previous construction or having moisture contents which are not suitable for the intended use. Depths of unsatisfactory materials are shown on the exploration logs.

1.3.3 Cohesionless and Cohesive Materials

Cohesive materials include materials classified as GC, SC, ML, CL, MH, and CH. Cohesionless materials include materials classified in ASTM D 2487 as GW, GP, SW, and SP. Materials classified as GM and SM will be identified as cohesionless only when the fines have a plasticity index of zero. Determination of grain size for classification will be made in conformance with ASTM C 117, ASTM C 136, or ASTM D 422.

1.3.4 Degree of Compaction

Degree of compaction is a percentage of the maximum density obtained by the test procedure presented in ASTM D 1557 abbreviated below as a percent of laboratory maximum density.

1.3.5 Topsoil

Material obtained from offsite areas, suitable for topsoils, is defined in SECTION: 02921, SEEDING or SECTION: 02922, SODDING. Depth of topsoil shall be as shown on the plans.

1.4 SUBMITTALS.

The following shall be submitted in accordance with SECTION: SUBMITTAL PROCEDURES:

02300/2.2 Borrow Material, GA.

02300/3.14 Field in-place Density Tests, GA.

1.5 SUBSURFACE DATA

Subsurface soil exploration logs are shown on the drawings. This data represents the best subsurface information available; however, variations may exist in the subsurface between exploration locations.

PART 2 PRODUCTS

2.1 ROCK FOR SLOPE PROTECTION (NOT APPLICABLE)

2.2 BORROW MATERIAL

Borrow material shall be selected to meet requirements and conditions of the particular fill for which it is to be used. Necessary clearing, grubbing, disposal of debris, and satisfactory drainage of borrow pits shall be performed by the Contractor as incidental operations to the borrow excavation.

2.2.1 Selection

Borrow materials shall be obtained from the borrow areas shown. Borrow materials shall be subject to approval. Borrow material from approved sources on Government-controlled land may be obtained without payment of royalties. The source of borrow material shall be the Contractor's responsibility.

2.2.2 Borrow Pits

Except as otherwise permitted, borrow pits shall be excavated to afford adequate drainage. Overburden and other spoil material shall be disposed of or used for special purposes. Borrow pits shall be neatly trimmed after the excavation is completed. The Contractor shall be responsible for maintaining the borrow sites. Maintenance is to include access road maintenance and dust control by watering. Overburden or other spoil materials shall not be disposed of in such a manner as to cover satisfactory materials or interfere with subsequent borrow operations. Borrow pits shall be neatly trimmed with no dirt or rubble piles, and no excavated slopes steeper than 1-1/2 horizontal to 1 vertical, after borrow is completed.

PART 3 EXECUTION

3.1 CONSERVATION OF TOPSOIL (NOT APPLICABLE)

3.2 EXCAVATION

Excavation of every description, regardless of material encountered, within the grading limits of the project shall be performed to the lines and grades indicated. Foundation materials under buildings and structures shall not be disturbed by heavy construction equipment or other traffic that may cause pumping or rutting of the foundation materials below indicated finish grade. Satisfactory excavation material shall be transported to and placed in fill areas within the limits of the work. All unsatisfactory material including any soil which is disturbed by the Contractor's operations or softened due to exposure to the elements and water and surplus material shall be disposed of outside the limits of Government-controlled land. In the event that it is necessary to remove unsatisfactory material to a depth greater than specified, the Contracting Officer shall be notified and an adjustment in the contract price will be considered in accordance with the contract. Excavations carried below the depths indicated, without specific directions, shall, except as otherwise specified, be refilled to the proper grade with satisfactory material as directed. All additional work of this nature shall be at the Contractor's expense. Excavation and filling shall be performed in a manner and

sequence that will provide drainage at all times. Excavations shall be kept free from water while construction therein is in progress. Material required for fills in excess of that produced by excavation within the grading limits shall be obtained from borrow areas.

3.3 DITCHES, GUTTERS, AND CHANNEL CHANGES

Ditches, gutters, and channel changes shall be cut accurately to the cross sections and grades indicated. All roots, stumps, rock, and foreign matter in the sides and bottom of ditches, gutters, and channel changes shall be trimmed and dressed or removed to conform to the slope, grade, and shape of the section indicated. Care shall be taken not to excavate ditches and gutters below the grades indicated. Excessive ditch and gutter excavation shall be backfilled to grade either with satisfactory, thoroughly compacted material or with suitable stone or cobble to form an adequate gutter paving as directed. All ditches and gutters excavated under this section shall be maintained until final acceptance of the work. Satisfactory material excavated from ditches and channel changes shall be placed in fill areas. Unsatisfactory and excess excavated material shall be disposed of in accordance with directions in paragraph "EXCAVATION." No excavated material shall be deposited closer to the edges of the ditches than indicated and in no case less than 1 meter.

3.4 BACKFILL ADJACENT TO STRUCTURES

Backfill adjacent to structures shall be placed and compacted uniformly in such manner as to prevent wedging action or eccentric loading upon or against the structures. Slopes bounding or within areas to be backfilled shall be stepped or serrated to prevent sliding of the fill. During backfilling operations and in the formation of embankments, equipment that will overload the structure in passing over and compacting these fills shall not be used. Backfill for storm drains and subdrains, including the bedding and backfill for structures other than culverts and drains, shall conform to the additional requirements in other applicable sections.

3.5 PREPARATION OF GROUND SURFACE FOR FILL

All vegetation, such as roots, brush, heavy sods, heavy growth of grass, and all decayed vegetable matter, rubbish, and other unsatisfactory material within the area upon which fill is to be placed, shall be stripped or otherwise removed before the fill is started. Unsatisfactory material shall not remain in or under the fill area. Sloped ground surfaces steeper than one vertical to four horizontal on which fill is to be placed shall be plowed, stepped, or broken up, as directed, in such manner that the fill material will bond with the existing surface. Prepared surfaces on which compacted fill is to be placed shall be wetted or dried as may be required to obtain the specified moisture content and density.

3.6 FILLS AND EMBANKMENTS

Fills and embankments shall be constructed at the locations and to lines and grades indicated. The completed fill shall conform to the shape of the typical sections indicated or shall meet the requirements of the particular case. Satisfactory material obtained during excavation may be used in forming required fill. Fill shall be satisfactory material and shall be reasonably free from roots, other organic material, and trash and from stones having a maximum diameter greater than 150 mm . However, occasional cobbles having sizes up to but not exceeding the lift thickness will be permitted provided that there are no pockets, lenses or concentrations of stone. Where such pockets, lenses or concentration of stone exist they shall be removed and replaced at the Contractors expense. No frozen material will be permitted in the fill. Stones having a dimension greater than 100 mm shall not be permitted in the upper 150 mm of fill or embankment. The material shall be placed in successive horizontal layers of 225 mm in loose depth for the full width of the

cross section and shall be compacted as specified. Each layer shall be compacted before the overlaying lift is placed. Moisture content of the fill or backfill material shall be adjusted by wetting or aerating, as required.

3.7 MOISTURE CONTROL (NOT APPLICABLE)

3.8 FINISHED EXCAVATION, FILLS, AND EMBANKMENTS

All areas covered by the project, including excavated and filled sections and adjacent transition areas, shall be uniformly smooth-graded. The finished surface shall be reasonably smooth, compacted, and free from irregular surface changes. The degree of finish shall be that ordinarily obtainable from blade-grader operations, except as otherwise specified. Ditches and gutters shall be finished to permit adequate drainage. The surface of areas to be turfed shall be finished to a smoothness suitable for the application of turfing materials. For subgrade areas to be paved, the following shall be accomplished as required: (a) soft or otherwise unsatisfactory material shall be removed up to a maximum depth of 750 mm and replaced with satisfactory excavated material or other approved materials; (b) low areas resulting from removal of unsatisfactory material or from excavation of rock shall be brought up to required grade with satisfactory materials, and the entire subgrade shall be shaped to line, grade, and cross section and shall be compacted as specified.

3.9 PLACING TOPSOIL

On areas to receive topsoil, the compacted subgrade soil shall be scarified to a 50 mm depth for bonding of topsoil with subsoil unless otherwise specified in other applicable sections. Topsoil then shall be spread evenly to a thickness as shown and graded to the elevations and slopes shown. Topsoil shall not be spread when frozen or excessively wet or dry. Material required for topsoil shall be obtained from off-site areas outside the limits of Government-controlled land.

3.10 SUBGRADE PREPARATION FOR PAVEMENTS

Subgrade shall be shaped to line, grade, and cross section, and compacted as specified. This operation shall include plowing, disking, and any moistening or aerating required to obtain specified compaction. Soft or otherwise unsatisfactory material shall be removed and replaced with satisfactory excavated material or other approved material as shown on the drawings or as directed by the Contracting Officer. Unsatisfactory materials shall be removed up to a maximum depth of 750 mm measured from the top of the subgrade and replaced with satisfactory material unless otherwise directed. Low areas resulting from removal of unsatisfactory material shall be brought up to required grade with satisfactory materials, and the entire subgrade shall be shaped to line, grade, and cross section and compacted as specified.

3.11 SHOULDER CONSTRUCTION

Shoulders shall be constructed of satisfactory excavated or borrow materials or as otherwise shown or specified herein. Shoulders shall be constructed as soon as possible after adjacent paving is complete, but in the case of rigid pavements, shoulders shall not be constructed until permission of the Contracting Officer has been obtained. Shoulder construction shall be done in proper sequence in such a manner that adjacent ditches will be drained effectively and that no damage of any kind is done to the adjacent completed pavement. The completed shoulders shall be true to alinement and grade and shaped to drain in conformity with the cross section shown.

3.12 PROTECTION

During construction, fills, embankments, and excavations shall be kept shaped and drained. Newly graded areas shall be protected from traffic and erosion, and any settlement or washing away that may occur from any cause, prior to acceptance, shall be repaired and grades reestablished to required elevations and slopes. All work shall be conducted in accordance with environmental protection requirements of the contract. Ditches and drains along subgrade shall be maintained in such a manner as to drain effectively at all times. The finished subgrade shall not be disturbed by traffic or other operation and shall be protected and maintained by the Contractor in a satisfactory condition until base course or pavement is placed. The storage or stockpiling of materials on the finished subgrade will not be permitted. No base course or pavement shall be laid until the subgrade has been checked and approved, and in no case shall base or pavement be placed on a muddy, spongy, or frozen subgrade.

3.13 COMPACTION

Each layer of the fill or embankment and subgrade shall be compacted to at least the percent of laboratory maximum density specified below:

	Percent Laboratory Maximum density Cohesive material	Cohesionless material
Fill, embankment, and backfill		
Under pavements and shoulders	90	95
Under non-paved areas	85	90
Subgrade		
Under pavements and shoulders, to a depth of at least 150 mm below the subgrade surface.	90	95

Compacted subgrades, fills, embankments, and backfills, that are disturbed by the Contractor's operations or by adverse weather before acceptance by the Contracting Officer shall be scarified and compacted at the specified moisture content to the required density before the continuation of construction. Any field density test results indicating the density does not meet specifications shall be followed immediately with a second field density test and a corresponding laboratory quality control test at no additional cost to the Government. The location of the second field density test shall be in the same lift and within 3 meters of the first test and along the direction of travel of the compaction equipment. Should the second field density test also indicate insufficient density, filling or backfilling shall cease in the affected area until all deficiencies have been correction. Inadequate materials shall be removed, reworked, or replaced, compacted and tested at no additional cost to the Government. Recompaction over underground utilities and heating lines shall be by hand tampering. Compaction requirements in trenches shall conform to applicable portions of SECTION: EXCAVATION, TRENCHING, AND BACKFILLING FOR UTILITIES SYSTEMS.

3.14 FIELD TESTING CONTROL

Testing shall be the responsibility of the Contractor and shall be performed by an approved commercial testing laboratory. Testing facilities and personnel shall meet the requirements of ASTM D 3740 and SECTION: 01451, CONTRACTOR QUALITY CONTROL. Field in- place density shall be determined in accordance with ASTM D 1556, ASTM D 2167, or ASTM D 2922. When ASTM D 2922 is used, the calibration curves shall be checked, and adjusted if necessary, using the sand cone method (ASTM D 1556) as described in paragraph Calibration of the ASTM publication. ASTM D 2922 results in a wet unit weight of soil and when using this method, ASTM D 3017 shall be used to determine the moisture content of the soil. The calibration curves furnished with the moisture gauges shall be checked along with density calibration checks as described in ASTM D 3017. The calibration checks of both the density and moisture gauges shall be made at the beginning of a job on each different type of material encountered and at intervals as directed.] Moisture-density relations shall be determined in accordance with ASTM D 1557. The minimum number of tests, acceptable for each type of operation shall be in accordance with SECTION: CONTRACTOR QUALITY CONTROL.

3.15 PROTECTION

Newly graded areas shall be protected from traffic and from erosion, and any settlement or washing away that may occur from any cause, prior to acceptance, shall be repaired and grades reestablished to the required elevations and slopes. All work shall be conducted in accordance with the environmental protection requirements of the contract.

END OF SECTION

This page intentionally blank

SECTION 02315

EXCAVATION, FILLING AND BACKFILLING FOR BUILDINGS

PART 1 GENERAL

1.1 SUMMARY (Not Applicable)

1.2 REFERENCES

The publications listed below form a part of this specification to the extent referenced. The publications are referred to in the text by basic designation only.

AMERICAN SOCIETY FOR TESTING AND MATERIALS (ASTM)

ASTM C 117	(1995) Materials Finer than 75- micrometer (um) (No. 200) Sieve in Mineral Aggregates by Washing
ASTM C 136	(1996) Sieve Analysis of Fine and Coarse Aggregates
ASTM D 422	(1963, R 1990) Particle-Size Analysis of Soils
ASTM D 1556	(1990, R 1996) Density of Soil in Place by the Sand-Cone Method
ASTM D 1557	(1991) Moisture-Density Relations of Soils and Soil-Aggregate Mixtures Using 4.54-kilogram (kg)(10-lb) Rammer and 457-mm (18-in.) Drop
ASTM D 2167	(1994) Density and Unit Weight of Soil in Place by the Rubber Balloon Method
ASTM D 2216	(1992) Laboratory Determination of Water (Moisture) Content of Soil, Rock, and Soil-Aggregate Mixtures
ASTM D 2217	(1985) Wet Preparation of Soil Samples for Particle-Size Analysis and Determination of Soil Constants
ASTM D 2487	(1993) Standard Classification of Soils for Engineering Purposes (Unitified Soil Classification System)

ASTM D 2922	(1996) Density of Soil and Soil-Aggregate in Place by Nuclear Methods (Shallow Depth)
ASTM D 2937	(1994) Density of Soil in Place by the Drive-Cylinder Method
ASTM D 3017	(1996) Water Content of Soil and Rock in Place by Nuclear Methods (Shallow Depth)
ASTM D 3740	(1996) Standard Practice for Minimum Requirements for Agencies Engaged in the Testing and/or Inspection of Soil and Rock as Used in Engineering Design and Corstruction
ASTM D 4318	(Rev. A, 1995) Liquid Limit, Plastic Limit, and Plasticity Index of Soils

1.3 DEFINITIONS

1.3.1 Degree of Compaction

Degree of compaction required is expressed as a percentage of the maximum density obtained by the test procedure presented in ASTM D 1557 abbreviated hereinafter as percent laboratory maximum density.

1.4 Submittals

Govenment Approval is required for submittals with a "GA" designation; submittals having an "FIO" designation are for information only. The following shall be submitted in accordance with SECTION: SUBMITTAL PROCEDURES:

02315/3.9 Borrow Materials; GA.

02315/2.1.10 Soil Treatment Agent; GA.
Certificaltins, material safety data sheets and manufacturers instructions, not less than 15 days before application of the soil treatment agent. A copy of the pesticide label, Contractor’s certification, and application plan including rates of application shall be submitted not less than 15 days before application of the soil treatment agent. All soil treatment submittals shall be approved by Directorate of Public Works (DPW) and the Contracting Officer.

1.5 SUBSURFACE DATA

Subsurface soil exploration logs are shown on the drawings. This data represents the best subsurface information available; however, variations may exist in the subsurface between explorations locations.

PART 2 PRODUCTS

2.1 MATERIALS

2.1.1 Satisfactory Materials

Satisfactory materials include materials classified in ASTM D 2487 as GW, GP, SW, and SP. Materials classified as SP-SM, GP-GM are also satisfactory provided that they contain a moisture content suitable for the intended use. Materials shall be free of trash, debris, roots or other organic matter, or stones larger than 75 millimeters (mm) in any dimension.

2.1.2 Unsatisfactory Materials

Unsatisfactory materials include materials classified in ASTM D 2487 as PT, OH, and OL and any other materials not defined as satisfactory. Unsatisfactory materials include but are not limited to those materials containing roots and other organic matter, trash, debris, frozen materials and stones larger than 75 mm. The black organic-rich silty sandy gravels (GM) are unsatisfactory.

2.1.3 Cohesionless and Cohesive Materials

Cohesionless materials include materials classified in ASTM D 2487 as GW, GP, SW, and SP. Cohesive materials include materials classified as GC, SC, ML, CL, MH, and CH. Materials classified as GM and SM will be identified as cohesionless only when the fines are nonplastic. Liquid limit and plasticity index shall be determined in accordance with ASTM D 4318 using ASTM D 2217, Procedure B. Determination of grain size for classification will be made in conformance with ASTM C 117, C 136, or D 422.

2.1.4 Capillary Water Barrier

Capillary Water Barrier shall consist of clean, crushed, nonporous rock, crushed gravel, or uncrushed gravel. The maximum particle size shall be 38 mm and no more than 2 percent by weight shall pass the 4.75 mm size sieve.

2.1.5 Soil Treatment Agent

Soil treatment agent shall be isofenphos, fenvalerate, cypermethrin, permethrin,or chlorphyrifos as approved by the Directorate of Public Works and the Contracting Officer. Labels shall bear evidence of registration under the Federal Insecticide, and Rodenticide Act and shall provide the manufactureres recommended rates of application.

PART 3 EXECUTION

3.1 CLEARING AND GRUBBING

The areas within lines 1.5 meters outside of each building and structure line shall be cleared and grubbed of trees, stumps, roots, brush and other vegetation, debris, existing foundations, pavements, utility lines, structures, fences, and other items that would interfere with construction operations. Stumps, logs, roots, and other organic matter shall be completely removed and the resulting depressions shall be filled with satisfactory material, placed and compacted in accordance with paragraph FILLING AND BACKFILLING. Materials removed shall be disposed of outside the limits of Government-controlled property. The Contractor shall be responsible for disposal of materials.

3.2 TOPSOIL

Topsoil shall be obtained from sources outside the limits of Government-controlled land and shall be as specified in SECTION 02921: SEEDING or 02922: SODDING.

3.3 EXCAVATION

Excavation shall conform to the dimensions and elevations indicated for each building, structure, and footing except as specified hereinafter, and shall include trenching for utilities systems to a point 1.5 meters beyond the building line of each building and structure and all work incidental thereto. Excavation shall extend a sufficient distance from walls and footings to allow for placing and removal of forms. All unsatisfactory materials shall be removed from under building footings, structures with footings, and up to a maximum depth of 750 mm measured from the top of the subgrade under pavements and replaced with satisfactory materials. Depths of unsatisfactory materials are indicated on the exploration logs.

During excavation and construction operations foundation materials under buildings and structures shall not be disturbed by heavy construction equipment or other traffic that may cause pumping or rutting of the foundation materials below indicated finish grade. All material disturbed or softened by the Contractor's operations shall be removed, disposed, and replaced with satisfactory materials at the Contractor's expense. Excavations below indicated depths will not be permitted except to remove unsatisfactory material. Unsatisfactory material encountered below the grades shown shall be removed as directed and replaced with satisfactory material. In the event that it is necessary to remove unsatisfactory material to a depth greater than specified, the Contracting Officer shall be notified and an adjustment in the contract price will be considered in accordance with the contract. Satisfactory material removed below the depths indicated without specific direction of the Contracting Officer shall be replaced at no additional cost to the Government to the indicated excavation grade with satisfactory materials, except that concrete footings shall be increased in thickness to the bottom of the overdepth excavations. Satisfactory material shall be placed and compacted as specified in paragraph FILLING AND BACKFILLING. Determination of elevations and measurements of approved overdepth excavation of unsatisfactory material below grades indicated shall be done under the direction of the Contracting Officer.

3.4 DRAINAGE AND DEWATERING

3.4.1 Drainage

Surface water shall be directed away from excavation and construction sites so as to prevent erosion and undermining of foundations. Diversion ditches, dikes and grading shall be provided and maintained as necessary during construction. Excavated slopes and backfill surfaces shall be protected to prevent erosion and sloughing. Excavation shall be performed so that the site and the area immediately surrounding the site and affecting operations at the site shall be continually and effectively drained.

3.4.2 Dewatering

Groundwater flowing toward or into excavations shall be controlled to prevent sloughing of excavation slopes and walls, boils, uplift and heave in the excavation and to eliminate interference with orderly progress of construction. French drains, sumps, ditches or trenches will not be permitted within 900 mm of the foundation of any structure, except with specific written approval, and after specific contractual provisions for restoration of the foundation area have been made. Control measures shall be taken by the time the excavation reaches the water level in order to maintain the integrity of the in situ material. While the excavation is open, the water level shall be maintained continuously, at least 600 mm below the working level. The excavation shall be drained by pumping or other satisfactory methods to prevent softening of the foundation bottom, undercutting of footings, or other actions detrimental to proper construction procedures.

3.5 SHORING

Shoring, including sheet piling, shall be furnished and installed as necessary to protect workmen, banks, adjacent paving, structures, and utilities. Shoring, bracing, and sheeting shall be removed as excavations are backfilled, in a manner to prevent caving.

3.6 CLASSIFICATION OF EXCAVATION

Excavation will be unclassified regardless of the nature of material encountered.

3.7 BLASTING

Blasting will not be permitted.

3.8 UTILITY AND DRAIN TRENCHES

Trenches for underground utilities systems and drain lines shall be excavated to the required alignments and depths. The bottoms of trenches shall be graded to secure the required slope and shall be tamped if necessary to provide a firm pipe bed. Recesses shall be excavated to accommodate bells and joints so that pipe will be uniformly supported for the entire length.

3.9 BORROW

Where satisfactory materials are not available in sufficient quantity from required excavations, approved materials shall be obtained from the designated borrow areas as specified in SECTION: EARTHWORK.

3.10 EXCAVATED MATERIALS

Satisfactory excavated material required for fill or backfill shall be placed in the proper section of the permanent work required under this section or shall be separately stockpiled if it cannot be readily placed. Satisfactory excavated materials shall not be mixed with unsatisfactory materials. Satisfactory material in excess of that required for the permanent work and all unsatisfactory material shall be disposed of outside the limits of Government-controlled land.

3.11 FINAL GRADE OF SURFACES TO SUPPORT CONCRETE

Excavation to final grade shall not be made until just before concrete is to be placed.

3.12 SUBGRADE PREPARATION

Unsatisfactory material in surfaces to receive fill or in excavated areas shall be removed and replaced with satisfactory materials. The surface shall be scarified to a depth of 150 mm before the fill is started. Sloped surfaces steeper than 1 vertical to 4 horizontal shall be plowed, stepped, benched, or broken up so that the fill material will bond with the existing material. When subgrades are less than the specified density, the ground surface shall be broken up to a minimum depth of 150 mm, pulverized, and compacted to the specified density. When the subgrade is part fill and part excavation or natural ground, the excavated or natural ground portion shall be scarified to a depth of 300 mm and compacted as specified for the adjacent fill. Material shall not be placed on surfaces that are muddy, frozen, or contain frost. Compaction shall be accomplished by sheepsfoot rollers, pneumatic-tired rollers, steel-wheeled rollers, or other approved

equipment well suited to the soil being compacted. Material shall be moistened or aerated as necessary to provide the moisture content that will readily facilitate obtaining the specified compaction with the equipment used. Minimum subgrade density shall be as specified in paragraph FILLING AND BACKFILLING.

3.13 SOIL TREATMENT

Just prior to placing concrete slab on grade and just prior to backfilling around concrete or masonry foundations for structures, soil treatment shall be applied. The Contractor shall notify and submit to the Contracting Officer and Directorate of Public Works (PDW) at least 15 days in advance before applying the soil treatment as specified in paragraph SUBMITTALS relating to soil treatment agent. Soil treatment agents shall be delivered to the jobsite in sealed and labeled containers bearing the manufacturer's warnings to be observed in the handling and use of soil treatment agents. Labels shall bear evidence of registration under the Federal Insecticide, Fungicide, and Rodenticide Act and shall provide recommended rates of application. Soil treatment agent shall be isofenphos, fenvalerate, cypermethrin, permethrin, or chlorphyrifos in concentrations as recommended by the manufacturer. Other soil treatment agents may be used with prior approval of the Contracting Officer and Directorate of Public Works. Soil treatment agents shall be applied by licensed and certified pest control specialists subject to approval by the Directorate of Public Works and the Contracting Officer.

3.14 FILLING AND BACKFILLING

Satisfactory materials shall be used in bringing fills and backfills to the lines and grades indicated and for replacing unsatisfactory materials. Occassional cobbles having sizes up to but no exceeding the lift thickness will be permitted provided that there are no pockets, lenses or concentration of stones. Where such pockets, lenses or concentration of stones exist they shall be removed and replaced at the Contractor's expense. Satisfactory materials shall be placed in horizontal layers not exceeding 225 mm in loose thickness, or 150 mm when hand-operated compactors are used. After placing, each layer shall be plowed, disked, or otherwise broken up, moistened or aerated as necessary, thoroughly mixed and compacted as specified. Backfilling shall not begin until construction below finish grade has been approved, underground utilities systems have been inspected, tested and approved, forms removed, and the excavation cleaned of trash and debris. Backfill shall be brought to indicated finish grade. Backfill shall not be placed in wet or frozen areas. Where pipe is coated or wrapped for protection against corrosion, the backfill material up to an elevation 600 mm above sewer lines and 300 mm above other utility lines shall be free from stones larger than 25 mm in any dimension. Heavy equipment for spreading and compacting backfill shall not be operated closer to foundation or retaining walls than a distance equal to the height of backfill above the top of footing; the area remaining shall be compacted in layers not more than 100 mm in compacted thickness with power-driven hand tampers suitable for the material being compacted. Backfill shall be placed carefully around pipes or tanks to avoid damage to coatings, wrappings, or tanks. Backfill shall not be placed against foundation walls prior to 7 days after completion of the walls. As far as practicable, backfill shall be brought up evenly on each side of the wall and sloped to drain away from the wall. Each layer of fill and backfill shall be compacted to not less than the percentage of maximum density specified below:

	Percent Laboratory maximum density	
	Cohesive Material	Cohesionless Material

Fill, embankment, and backfill		
Under structures, building slabs, steps, paved areas, around footings, and in trenches	90	95
Under sidewalks and grassed areas	85	90
Subgrade		
Under building slabs, steps, and paved areas, top 12 inches	90	95
Under sidewalks, top 6 inches	85	90

Approved compacted subgrades that are disturbed by the Contractor's operations or adverse weather shall be scarified and compacted as specified herein before to the required density prior to further construction thereon. Recompaction over underground utilities and heating lines shall be by hand tamping.

Compacted subgrades, fills, embankments, and backfills, that are disturbed by the Contractor's operations or by adverse weather before acceptance by the Contracting Officer shall be scarified and compacted at the specified moisture content to the required density before the continuation of construction. Any field density test results indicating the density does not meet specifications shall be followed immediately with a second field density test and a corresponding laboratory quality control test at no additional cost to the Government. The location of the second field density test shall be in the same lift and within 3 meters of the first test and along the direction of travel of the compaction equipment. Should the second field density test also indicate insufficient density, filling or backfilling shall cease in the affected area until all deficiencies have been correction. Inadequate materials shall be removed, reworked, or replaced, compacted and tested at no additional cost to the Government. Recompaction over underground utilities and heating lines shall be by hand tampering. Compaction requirements in trenches shall conform to applicable portions of SECTION: EXCAVATION, TRENCHING, AND BACKFILLING FOR UTILITIES SYSTEMS.

3.15 TESTING

Testing shall be the responsibility of the Contractor and shall be performed at no additional cost to the Government. Testing shall be performed by an approved commercial testing laboratory. Testing facilities and personnel shall meet the requirements of ASTM D 3740 and SECTION: CONTRACTOR QUALITY CONTROL. Field in- place density shall be determined in accordance with ASTM D 1556, ASTM D 2167,or ASTM D 2922. When ASTM D 2922 is used, the calibration curves shall be checked, and adjusted if necessary, using the sand cone method (ASTM D 1556) as described in paragraph Calibration of the ASTM publication. ASTM D 2922 results in a wet unit weight of soil and when using this method, ASTM D 3017 shall be used to determine the moisture content of the soil. The calibration curves furnished with the

moisture gauges shall be checked along with density calibration checks as described in ASTM D 3017. The calibration checks of both the density and moisture gauges shall be made at the beginning of a job on each different type of material encountered and at intervals as directed. Moisture-density relations shall be determined in accordance with ASTM D 1557. The minimum number of tests, acceptable for each type of operation shall be in accordance with SECTION: CONTRACTOR QUALITY CONTROL.

3.16 CAPILLARY WATER BARRIER

Capillary water barrier under concrete floor and area-way slabs on grade shall be placed directly on the subgrade and shall be compacted with a minimum of two passes of a hand-operated plate-type vibratory compactor.

3.17 GRADING

Areas within 1.5 meters outside of each building and structure line shall be constructed true-to-grade, shaped to drain, and shall be maintained free of trash and debris until final inspection has been completed and the work has been accepted.

3.18 SPREADING TOPSOIL

Topsoil shall be placed in the areas as shown on the plans. The surface shall be free of materials that would hinder planting or maintenance operations. The subgrade shall be pulverized to a depth of 50 mm by disking or plowing for the bonding of topsoil with the subsoil. Topsoil shall then be uniformly spread, graded, and compacted to the thickness, elevations, slopes shown, and left free of surface irregularities. Topsoil shall be compacted by one pass of a cultipacker, roller, or other approved equipment weighing 150 to 240 kg per linear meter of roller or unless otherwise specified in SECTION: SEEDING or SODDING. Topsoil shall not be placed when the subgrade is frozen, excessively wet, extremely dry, or in a condition otherwise detrimental to seeding, planting, or proper grading.

3.19 PROTECTION

Settlement or washing that occurs in graded, topsoiled, or backfilled areas prior to acceptance of the work shall be repaired and grades reestablished to the required elevations and slopes.

END OF SECTION

SECTION 02316

EXCAVATION, TRENCHING, AND BACKFILLING FOR UTILITIES SYSTEMS

PART 1 GENERAL

1.1 SUMMARY (Not Applicable)

1.2 REFERENCES

The publications listed below form a part of this specification to the extent referenced. The publications are referred to in the text by basic designation only.

AMERICAN SOCIETY FOR TESTING AND MATERIALS (ASTM)

ASTM C 117	(1995) Materials Finer than 75- micrometer (um) (No. 200) Sieve in Mineral Aggregates by Washing
ASTM C 136	(1996) Sieve Analysis of Fine and Coarse Aggregates
ASTM D 422	(1963, R 1990) Particle-Size Analysis of Soils
ASTM D 1556	(1990, R 1996) Density of Soil in Place by the Sand-Cone Method
ASTM D 1557	(1991) Moisture-Density Relations of Soils and Soil-Aggregate Mixtures Using 4.54-kilogram (kg)(10-lb) Rammer and 457-mm (18-in.) Drop
ASTM D 2167	(1994) Density and Unit Weight of Soil in Place by the Rubber Balloon Method
ASTM D 2216	(1992) Laboratory Determination of Water (Moisture) Content of Soil, Rock, and Soil-Aggregate Mixtures
ASTM D 2217	(1985) Wet Preparation of Soil Samples for Particle-Size Analysis and Determination of Soil Constants
ASTM D 2487	(1993) Standard Classification of Soils for Engineering Purposes (Unitified Soil Classification System)
ASTM D 2922	(1996) Density of Soil and Soil-Aggregate in Place by Nuclear Methods (Shallow Depth)
ASTM D 3017	(1996) Water Content of Soil and Rock in Place by Nuclear Methods (Shallow Depth)

ASTM D 3740 (1996) Standard Practice for Minimum Requirements for Agencies Engaged in the Testing and/or Inspection of Soil and Rock as Used in Engineering Design and Corstruction

ASTM D 4318 (Rev. A, 1995) Liquid Limit, Plastic Limit, and Plasticity Index of Soils

U.S. Army Corps of Engineers Manual:

EM 385-1-1 Safety and Health Requirements

1.3 MEASUREMENT AND PAYMENT (NOT APPLICABLE)

1.4 DEFINITIONS

1.4.1 Degree of Compaction

Degree of compaction shall be expressed as a percentage of the maximum density obtained by the test procedure presented in ASTM D 1557.

1.5 SUBMITTALS

Government approval is required for submittals with a "GA" designation; submittals having an "FIO" designation are for information only. The following shall be submitted in accordance with SECTION 01330 SUBMITTAL PROCEDURES:

SD-09 Reports

Field Density Tests; GA. Testing of Backfill Materials; GA.

Copies of all laboratory and field test reports within 24 hours of the completion of the test.

PART 2 PRODUCTS

2.1 MATERIALS

2.1.1 Satisfactory Materials

Satisfactory materials shall consist of any material classified by ASTM D 2487 as GW, GP, SP, and SW. Materials classified as SP-SM, or GP-GM are also satisfactory provided that they contain moisture content suitable for the intended use. Then black organic-rich silty sandy gravels (GM) are satisfactory for use as final backfilll in open, seeded, or turfedd areas only providing they contain moisture contents suitable for the intended use.

2.1.2 Unsatisfactory Materials

Unsatisfactory materials shall be materials that do not comply with the requirements for satisfactory materials. Unsatisfactory materials include but are not limited to those materials containing roots and other

organic matter, trash, debris, frozen materials and stones larger than 75 mm, and materials classified in ASTM D 2487, as PT, OH, and OL. Unsatisfactory materials also include man-made fills, refuse, or backfills from previous construction.

2.1.3 Cohesionless and Cohesive Materials

Cohesionless materials shall include materials classified in ASTM D 2487 as GW, GP, SW, and SP. Cohesive materials include materials classified as GC, SC, ML, CL, MH, and CH. Materials classified as GM and SM will be identified as cohesionless only when the fines are nonplastic. Liquid limit and plasticity index shall be determined in accordance with ASTM D 4318 using ASTM D 2217, Procedure B. Determination of grain size for classification will be made in conformance with ASTM C 117, ASTM C 136, or ASTM D 422.

2.1.4 Rock (Not Applicable)

2.1.5 Unyielding Material

Unyielding material shall consist of gravelly soils with stones greater than 75 mm in any dimension or as defined by the pipe manufacturer, whichever is smaller.

2.1.6 Unstable Material

Unstable material shall consist of materials too wet to properly support the utility pipe, conduit, or appurtenant structure.

2.1.7 Select Granular Material for Utilities

Select granular material shall consist of well-graded sand, gravel, crushed gravel, crushed stone or crushed slag composed of hard, tough and durable particles, and shall contain not more than 10 percent by weight of material passing a 0.075 mm mesh sieve and no less than 95 percent by weight passing the 25 mm sieve. The maximum allowable aggregate size shall be 75 mm, or the maximum size recommended by the pipe manufacturer, whichever is smaller.

2.1.8 Initial Backfill Material

Initial backfill shall consist of select granular material or satisfactory materials free from rocks 50 mm or larger in any dimension or free from rocks of such size as recommended by the pipe manufacturer, whichever is smaller. When the pipe is coated or wrapped for corrosion protection, the initial backfill material shall be free of stones larger than 25 mm in any dimension or as recommended by the pipe manufacturer, whichever is smaller.

2.1.9 Plastic Marking Tape

Plastic marking tape shall be acid and alkali-resistant polyethylene film, 150 mm wide with minimum thickness of 0.1 mm inch. Tape shall have a minimum strength of 12 megapascals (MPa) lengthwise and 10.3 Mpa crosswise. The tape shall be manufactured with integral wires, foil backing or other means to enable detection by a metal detector when the tape is buried up to 900 mm deep. The tape shall be of a type specifically manufactured for marking and locating underground utilities. The metallic core of the tape shall be encased in a protective jacket or provided with other means to protect it from corrosion. Tape

color shall be as specified in TABLE 1 and shall bear a continuous printed inscription describing the specific utility.

TABLE 1. TAPE COLOR

Red:	Electric
Yellow:	Gas, Oil, Dangerous Materials
Orange:	Telephone, Telegraph, Television, Police, and Fire Communications
Blue:	Water Systems
Green:	Sewer Systems

2.1.10 BORROW MATERIAL

Borrow material shall be selected to meet requirements and conditions of the particular fill for which it is to be used. Necessary clearing, grubbing, disposal of debris, and satisfactory drainage of borrow pits shall be performed by the Contractor as incidental operations to the borrow excavation.

2.1.10.1 Selection

Borrow materials shall be obtained from the borrow areas shown. Borrow materials shall be subject to approval. Borrow material from approved sources on Government-controlled land may be obtained without payment of royalties. The source of borrow material shall be the Contractor's responsibility.

2.1.10.2 Borrow Pits

Except as otherwise permitted, borrow pits shall be excavated to afford adequate drainage. Overburden and other spoil material shall be disposed of or used for special purposes. Borrow pits shall be neatly trimmed after the excavation is completed. The Contractor shall be responsible for maintaining the borrow sites. Maintenance is to include access road maintenance and dust control by watering. Overburden or other spoil materials shall not be disposed of in such a manner as to cover satisfactory materials or interfere with subsequent borrow operations. Borrow pits shall be neatly trimmed with no dirt or rubble piles, and no excavated slopes steeper than 1-1/2 horizontal to 1 vertical, after borrow is completed.

PART 3 EXECUTION

3.1 EXCAVATION

Excavation of every description and of whatever substances encountered shall be performed to the lines and grades indicated. Excavation shall be unclassified. During excavation, material satisfactory for backfilling shall be stockpiled in an orderly manner at a distance from the banks of the trench equal to 1/2 the depth of the excavation, but in no instance closer than 600 mm. Excavated material not required or not satisfactory for backfill shall be removed from the site and shall be disposed of outside the limits of Government-controlled land. The Contractor shall be responsible for disposal of materials. Unsatisfactory materials shall not cover available suitable materials. Grading shall be done as may be necessary to prevent surface

water from flowing into the excavation, and any water accumulating therein shall be removed to maintain the stability of the bottom and sides of the excavation. Unauthorized overexcavation shall be backfilled in accordance with paragraph BACKFILLING at no additional cost to the Government.

3.1.1 Trench Excavation

The trench shall be excavated as recommended by the manufacturer of the pipe to be installed. Trench walls below the top of the pipe shall be sloped, or made vertical, and of such width as recommended in the manufacturer's installation manual. Where no manufacturer's installation manual is available, trench walls shall be excavated to a stable angle of repose as required to properly complete the work. Trench excavations shall adhere to requirements prescribed in EM 385-1-1, Safety and Health Requirements Manual. Special attention shall be given to slopes which may be adversely affected by weather or moisture content. The trench width below the top of pipe shall not exceed 600 mm plus pipe outside diameter (O.D.) for pipes of less than 600 mm inside diameter and shall not exceed 900 mm plus pipe outside diameter for sizes larger than 600 mm inside diameter. Where recommended trench widths are exceeded, redesign, stronger pipe, or special installation procedures shall be utilized by the Contractor. The cost of redesign, stronger pipe, or special installation procedures shall be borne by the Contractor without any additional cost to the Government.

3.1.1.1 Bottom Preparation

The bottoms of trenches shall be accurately graded to provide uniform bearing and support for the bottom quadrant of each section of the pipe. Bell holes shall be excavated to the necessary size at each joint or coupling to eliminate point bearing. Stones of 75 mm or greater in any dimension, or as recommended by the pipe manufacturer, whichever is smaller, shall be removed to avoid point bearing.

3.1.1.2 Removal of Unyielding Material

Where unyielding material is encountered in the bottom of the trench, such material shall be removed 100 mm below the required grade and replaced with suitable materials as provided in paragraph BACKFILLING.

3.1.1.3 Removal of Unstable Material

Where unstable material is encountered in the bottom of the trench, such material shall be removed to the depth directed and replaced to the proper grade with select granular material as provided in paragraph BACKFILLING. When removal of unstable material is required due to the fault or neglect of the Contractor in his performance of the work, the resulting material shall be excavated and replaced by the Contractor without additional cost to the Government.

3.1.1.4 Excavation for Appurtenances

Excavation for manholes, catch-basins, inlets, or similar structures shall be of sufficient size to permit the placement and removal of forms for the full length and width of structure footings and foundations as shown. Removal of unstable material shall be as specified above. When concrete or masonry is to be placed in an excavated area, special care shall be taken not to disturb the bottom of the excavation. Excavation to the final grade level shall not be made until just before the concrete or masonry is to be placed.

3.1.1.5 Jacking, Boring, and Tunneling

Unless otherwise indicated, excavation shall be by open cut except that sections of a trench may be jacked, bored, or tunneled if, in the opinion of the Contracting Officer, the pipe, cable, or duct can be safely and properly installed and backfill can be properly compacted in such sections.

3.1.1.6 Stockpiles

Stockpiles of satisfactory shall be placed and graded as specified. Stockpiles shall be kept in a neat and well drained condition, giving due consideration to drainage at all times. The ground surface at stockpile locations shall be cleared, grubbed, and sealed by rubber-tired equipment, excavated satisfactory and unsatisfactory materials shall be separately stockpiled. Stockpiles of satisfactory materials shall be protected from contamination which may destroy the quality and fitness of the stockpiled material. If the Contractor fails to protect the stockpiles, and any material becomes unsatisfactory, such material shall be removed and replaced with satisfactory material from approved sources at no additional cost to the Government. Locations of stockpiles of satisfactory materials shall be subject to prior approval of the Contracting Officer.

3.2 BACKFILLING

Backfill material shall consist of satisfactory material, select granular material, or initial backfill material as required. Backfill shall be placed in layers not exceeding 150 mm loose thickness for compaction by hand operated machine compactors, and 200 mm loose thickness for other than hand operated machines, unless otherwise specified. Each layer shall be compacted to at least 95 percent maximum density for cohesionless soils and 90 percent maximum density for cohesive soils, unless otherwise specified. The first 150 mm of backfill material directly above PVC or copper pipes shall not be compacted. The backfill shall be brought up evenly on both sides of the pipe for the full length. Care shall be taken to ensure thorough compaction of the full under the haunch of the pipe. Material required for backfills in excess of that produced by excavation shall be obtained from borrow areas.

3.2.1 Trench Backfill

Trenches shall be backfilled to the grade shown. The trench shall be backfilled to 600 mm above the top of pipe prior to performing the required pressure tests. The joints and couplings shall be left uncovered during the pressure test.

3.2.1.1 Replacement of Unyielding Material

Unyielding material removed from the bottom of the trench shall be replaced with select granular material or initial backfill material.

3.2.1.2 Replacement of Unstable Material

Unstable material removed from the bottom of the trench or excavation shall be replaced with select granular material placed in layers not exceeding 150 mm loose thickness.

3.2.1.3 Bedding and Initial Backfill

Bedding shall be of the type and thickness shown. Bedding shall be clean, sand-gravel mixture free from organic matter and conforming to the following gradation when tested in accordance with ASTM D 422.

U.S. Standard	Percent

Sieve Size	Passing
25 mm	100
4.75 mm	25-80
0.075 mm	0-10

Initial backfill material shall be placed and compacted with approved tampers to a height of at least 300 mm above the utility pipe or conduit. The backfill shall be brought up evenly on both sides of the pipe for the full length of the pipe. Care shall be taken to ensure thorough compaction of the fill under the haunches of the pipe. Backfill material in this portion of the trench shall consist of satisfactory material at a moisture content that will facilitate compaction, free from stones of such size as recommended by the pipe manufacturer, or larger than 50 mm in any dimension, whichever is smaller, except that where the pipe is coated or wrapped for protection against corrosion, the backfill material shall be free of stones larger than 25 mm in any dimension or as recommended by the pipe manufacturer, whichever is smaller.

3.2.1.4 Final Backfill

The remainder of the trench, except for special materials for roadways, shall be filled with satisfactory material. Backfill material shall be placed and compacted as follows:

3.2.1.4.1 Roadways

Backfill shall be placed up to the elevation at which the requirements in SECTION: EARTHWORK control. Water flooding or jetting methods of compaction will not be permitted.

3.2.1.4.2 Sidewalks, Turfed or Seeded Areas and Miscellaneous Areas

Backfill shall be deposited in layers of a maximum of 300 mm loose thickness, and compacted to 85 percent maximum density for cohesive soils and 90 percent maximum density for cohesionless soils. Compaction by water flooding or jetting will not be permitted. This requirement shall also apply to all other areas not specifically designated above.

3.2.2 Backfill for Appurtenances

After the manhole, catchbasin, inlet, or similar structure has been constructed and the concrete has been allowed to cure for 3 days, backfill shall be placed in such a manner that the structure will not be damaged by the shock of falling earth. The backfill material shall be deposited and compacted as specified for final backfill, and shall be brought up evenly on all sides of the structure to prevent eccentric loading and excessive stress.

3.3 SPECIAL REQUIREMENTS

Special requirements for both excavation and backfill relating to the specific utilities are as follows:

3.3.1 Gas Distribution

Trenches shall be excavated to a depth that will provide not less than 600 mm of cover in other excavation. Trenches shall be graded as specified for pipe-laying requirements in SECTION 02556: GAS DISTRIBUTION SYSTEM.

3.3.2 Water Lines

Trenches shall be of a depth to provide a minimum cover of 900 mm from the existing ground surface, or from the indicated finished grade, whichever is lower, to the top of the pipe.

3.3.3 Heat Distribution System (Not Applicable)

3.3.4 Electrical Distribution System

Direct burial cable and conduit or duct line shall have a minimum cover of 600 mm from the finished grade, unless otherwise indicated. Special trenching requirements for direct-burial electrical cables and conduits are specified in SECTION: ELECTRICAL DISTRIBUTION SYSTEM, UNDERGROUND.

3.3.5 Plastic Marking Tape

Warning tapes shall be installed directly above the pipe, at a depth of 450 mm below finished grade unless otherwise shown.

3.4 TESTING

Testing shall be the responsibility of the Contractor and shall be performed at no additional cost to the Government. Number of tests shall be in accordance with SECTION: CONTRACTOR QUALITY CONTROL.

3.4.1 Testing Facilities

Tests shall be performed by an approved commercial testing laboratory. Approval of testing facilities and personnel shall be based on compliance with ASTM D 3740 and in accordance with SECTION: CONTRACTOR QUALITY CONTROL.

3.4.2 Testing of Backfill Materials

Characteristics of backfill materials shall be determined in accordance with particle size analysis of soils ASTM D 422 and laboratory tests for moisture-density relations of soils in accordance with ASTM D 1557. A mechanical tamper may be used, provided the results are correlated with those obtained by the referenced hand tamper or ASTM D 1557. Field in-place density shall be determined in accordance with ASTM D 1556, D 2167, or D 2922. Trenches improperly compacted shall be reopened to the depth directed, then refilled and compacted to the density specified at no additional cost to the Government.

3.4.3 Field Density Tests

Field in-place density shall be determined in accordance with ASTM D 1556, ASTM D 2167, or ASTM D 2922. When ASTM D 2922 is used, the calibration curves shall be checked and adjusted using the sand cone method (ASTM D 1556) as described in paragraph Calibration of the ASTM publication. ASTM D 2922 results in a wet unit weight of soil and when using this method, ASTM D 3017 shall be used to determine the moisture content of the soil. The calibration curves furnished with the moisture gauges shall be checked along with density calibration checks as described in ASTM D 3017. The calibration checks of both the density and moisture gauges shall be made at the beginning of a job, on each different type of material encountered, at intervals as directed by the Contracting Officer. Copies of calibration curves, results of calibration tests, and field and laboratory density tests shall be furnished to the Contracting

Officer. Trenches improperly compacted shall be reopened to the depth directed, then refilled and compacted to the density specified at no additional cost to the Government.

3.4.4 Displacement of Sewers

After other required tests have been performed and the trench backfill compacted to 600 mm above the top of the pipe, the pipe shall be inspected to determine whether significant displacement has occurred. This inspection shall be conducted in the presence of the Contracting Officer. Pipe sizes larger than 900 mm shall be entered and examined, while smaller diameter pipe shall be inspected by shining a light or laser between manholes or manhole locations, or by the use of television cameras passed through the pipe. If, in the judgment of the Contracting Officer, the interior of the pipe shows poor alignment or any other defects that would cause improper functioning of the system, the defects shall be remedied as directed at no additional cost to the Government

END OF SECTION

This page intentionally blank

SECTION 02510

WATER DISTRIBUTION SYSTEM

PART 1 GENERAL

1.1 REFERENCES

The publications listed below form a part of this specification to the extent referenced. The publications are referred to in the text by basic designation only.

AMERICAN RAILWAY ENGINEERING ASSOCIATION (AREA)

AREA-01	(1996) 1996-1997 Manual for Railway Engineering (Fixed Properties) 4 Vol.

AMERICAN SOCIETY FOR TESTING AND MATERIALS (ASTM)

ASTM C 76M	(1996) Reinforced Concrete Culvert, Storm Drain, and Sewer Pipe (Metric)
ASTM D 1599	(1988; R 1995) Short-Time Hydraulic Failure Pressure of Plastic Pipe, Tubing, and Fittings
ASTM D 1784	(1996) Rigid Poly(Vinyl Chloride) (PVC) Compounds and Chlorinated Poly(Vinyl Chloride) (CPVC) Compounds
ASTM D 1785	(1996a) Poly(Vinyl Chloride) (PVC) Plastic Pipe, Schedules 40, 80, and 120
ASTM D 2241	(1996a) Poly(Vinyl Chloride) (PVC) Pressure-Rated Pipe (SDR Series)
ASTM D 2464	(1996a) Threaded Poly(Vinyl Chloride) (PVC) Plastic Pipe Fittings, Schedule 80
ASTM D 2466	(1996a) Poly(Vinyl Chloride) (PVC) Plastic Pipe Fittings, Schedule 40
ASTM D 2467	(1996a) Poly(Vinyl Chloride) (PVC) Plastic Pipe Fittings, Schedule 80

ASTM D 2564	(1996a) Solvent Cements for Poly(Vinyl Chloride) (PVC) Plastic Piping Systems
ASTM D 2657	(1996) Heat Fusion Joining Polyolefin Pipe and Fittings
ASTM D 2774	(1994) Underground Installation of Thermoplastic Pressure Piping
ASTM D 2855	(1996) Making Solvent-Cemented Joints with Poly(Vinyl Chloride) (PVC) Pipe and Fittings
ASTM D 2996	(1995) Filament-Wound "Fiberglass" (Glass-Fiber-Reinforced Thermosetting-Resin) Pipe
ASTM D 2997	(1995) Centrifugally Cast "Fiberglass" (Glass-Fiber-Reinforced-Thermosetting-Resin) Pipe
ASTM D 3139	(1996a) Joints for Plastic Pressure Pipes Using Flexible Elastomeric Seals
ASTM D 3839	(1994a) Underground Installation of "Fiberglass" (Glass-Fiber-Reinforced Thermosetting Resin) Pipe
ASTM F 477	(1995) Elastomeric Seals (Gaskets) for Joining Plastic Pipe
ASTM F 1483	(1993) Oriented Poly(Vinyl Chloride), PVCO, Pressure Pipe

AMERICAN SOCIETY OF MECHANICAL ENGINEERS (ASME)

ASME B1.20.1	(1983; R 1992) Pipe Threads, General Purpose (Inch)
ASME B16.1	(1989) Cast Iron Pipe Flanges and Flanged Fittings
ASME B16.3	(1992) Malleable Iron Threaded Fittings
ASME B16.26	(1988) Cast Copper Alloy Fittings for Flared Copper Tubes
ASME B36.10M	(1996) Welded and Seamless Wrought Steel Pipe

AMERICAN WATER WORKS ASSOCIATION (AWWA)

AWWA B300	(1992) Hypochlorites
AWWA B301	(1992) Liquid Chlorine
AWWA ANSI/AWWA C104/A21.4	(1995) Cement-Mortar Lining for Ductile-Iron Pipe and Fittings for Water

AWWA ANSI/AWWA C105/A21.5	(1993) Polyethylene Encasement for Ductile-Iron Pipe Systems
AWWA ANSI/AWWA C110/A21.10	(1993) Ductile-Iron and Gray-Iron Fittings, 3 In. Through 48 In. (75# mm through 1200# mm), for Water and Other Liquids
AWWA ANSI/AWWA C111/A21.11	(1995) Rubber-Gasket Joints for Ductile-Iron Pressure Pipe and Fittings
AWWA ANSI/AWWA C115/A21.15	(1994) Flanged Ductile-Iron Pipe With Ductile-Iron or Gray-Iron Threaded Flanges
AWWA ANSI/AWWA C151/A21.51	(1996) Ductile-Iron Pipe, Centrifugally Cast, for Water or Other Liquids
AWWA ANSI/AWWA C153/A21.53	(1994; Errata Nov 1996) Ductile-Iron Compact Fittings, 3 In. Through 24 In. (76 mm through 610 mm) and 54 In. through 64 In. (1,400 mm through 1,600 mm) for Water Service Liquids
AWWA C301	(1992) Prestressed Concrete Pressure Pipe, Steel-Cylinder Type, for Water and Other Liquids
AWWA C500	(1993; C500a) Metal-Sealed Gate Valves for Water Supply Service
AWWA ANSI/AWWA C502	(1994; C502a) Dry-Barrel Fire Hydrants
AWWA C509	(1994) Resilient-Seated Gate Valves for Water Supply Service
AWWA C600	(1993) Installation of Ductile-Iron Water Mains and Their Appurtenances
AWWA C606	(1987) Grooved and Shouldered Joints
AWWA C651	(1992) Disinfecting Water Mains
AWWA ANSI/AWWA C700	(1995) Cold-Water Meters - Displacement Type, Bronze Main Case
AWWA C701	(1988) Cold-Water Meters - Turbine Type, for Customer Service
AWWA ANSI/AWWA C702	(1992) Cold-Water Meters - Compound Type
AWWA ANSI/AWWA C703	(1996) Cold-Water Meters - Fire Service Type

AWWA ANSI/AWWA C704	(1992) Propeller-Type Meters Waterworks Applications
AWWA C706	(1996) Direct-Reading, Remote-Registration Systems for Cold-Water Meters
AWWA ANSI/AWWA C707	(1982; R 1992) Encoder-Type Remote-Registration Systems for Cold-Water Meters
AWWA C800	(1989) Underground Service Line Valves and Fittings
AWWA C900	(1989; C900a) Polyvinyl Chloride (PVC) Pressure Pipe, 4 In. Through 12 In., for Water Distribution
AWWA C901	(1996) Polyethylene (PE) Pressure Pipe and Tubing, 1/2 In. Through 3 In., for Water Service
AWWA C950	(1995) Fiberglass Pressure Pipe
AWWA M23	(1980) Manual: PVC Pipe - Design and Installation

ASBESTOS CEMENT PIPE PRODUCERS ASSOCIATION (ACPPA)

ACPPA-01	(1988) Recommended Work Practices for A/C Pipe

DUCTILE IRON PIPE RESEARCH ASSOCIATION (DIPRA)

DIPRA-01	(1997) Thrust Restraint Design for Ductile Iron Pipe

MANUFACTURERS STANDARDIZATION SOCIETY OF THE VALVE AND FITTINGS INDUSTRY (MSS)

MSS SP-80	(1997) Bronze Gate, Globe, Angle and Check Valves

NATIONAL FIRE PROTECTION ASSOCIATION (NFPA)

NFPA 24	(1995) Installation of Private Fire Service Mains and Their Appurtenances
NFPA 49	(1994) Hazardous Chemicals Data
NFPA 325-1	(1994) Fire Hazard Properties of Flammable Liquids, Gases, and Volatile Solids
NFPA 704	(1996) Identification of the Fire Hazards of Materials for Emergency Response
NFPA 1961	(1997) Fire Hose

NSF INTERNATIONAL (NSF)

NSF ANSI/NSF 14	(1996) Plastics Piping Components and Related Materials
NSF ANSI/NSF 61	(1997a) Drinking Water System Components - Health Effects (Sections 1-9)

STEEL STRUCTURES PAINTING COUNCIL (SSPC)

SSPC Paint 21	(1991) White or Colored Silicone Alkyd Paint
SSPC Paint 25	(1991) Red Iron Oxide, Zinc Oxide, Raw Linseed Oil and Alkyd Primer (Without Lead and Chromate Pigments)

1.2 PIPING

This section covers water distribution lines and connections to building service at a point approximately 1.5 m outside buildings and structures to which service is required. The Contractor shall have a copy of the manufacturer's recommendations for each material or procedure to be utilized available at the construction site at all times.

1.2.1 Service Lines

Piping for water service lines less than 80 mm in diameter shall be ductile iron, polyvinyl chloride (PVC) plastic, or Oriented PVC plastic polyethylene, , unless otherwise shown or specified. Piping for water service lines 80 mm and larger shall be, polyvinyl chloride (PVC) plastic, filament-wound or centrifugally cast reinforced thermosetting resin, reinforced plastic mortar pressure pipe or steel, unless otherwise shown or specified.

1.2.2 Distribution Lines 80 mm or Larger

Piping for water distribution lines 80 mm (3 inches) or larger shall be ductile iron, polyvinyl chloride (PVC) through 900 mm (36 inch) nominal diameter plastic, Oriented PVC plastic filament-wound or centrifugally cast reinforced thermosetting resin, or reinforced plastic mortar pressure pipe, unless otherwise shown or specified.

1.2.4 Sprinkler Supply Lines

Piping for water lines supplying sprinkler systems for building fire protection shall conform to NFPA 24 from the point of connection with the water distribution system to the building 1.5 m line.

1.2.5 Potable Water Lines

Piping and components of potable water systems which come in contact with the potable water shall conform to NSF ANSI/NSF 61.

1.2.6 Plastic Piping System

Plastic piping system components (PVC, polyethylene, thermosetting resin and reinforced plastic mortar pressure) intended for transportation of potable water shall comply with NSF ANSI/NSF 14 and be legibly marked with their symbol.

1.2.7 Excavation, Trenching, and Backfilling

Excavation, trenching, and backfilling shall be in accordance with the applicable provisions of Section 02316 EXCAVATION, TRENCHING, AND BACKFILLING FOR UTILITIES SYSTEMS, except as modified herein.

1.3 MANUFACTURER'S REPRESENTATIVE

The Contractor shall have a manufacturer's field representative present at the jobsite during the installation and testing of PE, RTRP, and/or RPMP pipe to provide technical assistance and to verify that the materials are being installed in accordance with the manufacturer's prescribed procedures. When the representative feels that the Contractor is installing and testing the PE, RTRP, and/or RPMP pipe in a satisfactory manner, certification shall be written to note which individuals employed by the Contractor are capable of properly installing the pipe. The field representative shall advise the Contractor of unsatisfactory conditions immediately when they occur. Such conditions include improper diameter of pipe ends, damaged interior liner, poorly prepared joints, improper curing of joints, moving pipe before joints are cured, bending pipe to follow abrupt changes in trench contours, leaving pipe ends open in trench overnight, not properly drying joints after rain storms, exceeding effective adhesive life, sharp objects in trench bed, backfill that could damage pipe, improper procedure for concrete encasement of pipe, omission of thrust blocks at changes in direction or any other condition which could have an adverse effect on the satisfactory completion and operation of the piping system.

1.4 SUBMITTALS

Government approval is required for submittals with a "GA" designation; submittals having an "FIO" designation are for information only. The following shall be submitted in accordance with SECTION 01330 SUBMITTAL PROCEDURES:

SD-06 Instructions

Installation; FIO.

The manufacturer's recommendations for each material or procedure to be utilized.

SD-08 Statements

Waste Water Disposal Method; FIO.

The method proposed for disposal of waste water from hydrostatic tests and disinfection, prior to performing hydrostatic tests.

Satisfactory Installation; FIO.

A statement signed by the principal officer of the contracting firm stating that the installation is satisfactory and in accordance with the contract drawings and specifications, and the manufacturer's prescribed procedures and techniques, upon completion of the project and before final acceptance.

SD-09 Reports

Bacteriological Disinfection; FIO.

Test results from commercial laboratory verifying disinfection.

SD-13 Certificates

Manufacturer's Representative; FIO.

The name and qualifications of the manufacturer's representative and written certification from the manufacturer that the representative is technically qualified in all phases of PE, RTRP, and/or RPMP pipe laying and jointing and experienced to supervise the work and train the Contractor's field installers, prior to commencing installation.

Installation; FIO.

A statement signed by the manufacturer's field representative certifying that the Contractor's personnel are capable of properly installing the pipe on the project.

Meters; FIO.

Manufacturer's certificate stating that each meter furnished has been tested for accuracy of registration and compliance with the accuracy and capacity requirements of the appropriate AWWA standard.

1.5 HANDLING

Pipe and accessories shall be handled to ensure delivery to the trench in sound, undamaged condition, including no injury to the pipe coating or lining. If the coating or lining of any pipe or fitting is damaged, the repair shall be made by the Contractor in a satisfactory manner, at no additional cost to the Government. No other pipe or material shall be placed inside a pipe or fitting after the coating has been applied. Pipe shall be carried into position and not dragged. Use of pinch bars and tongs for aligning or turning pipe will be permitted only on the bare ends of the pipe. The interior of pipe and accessories shall be thoroughly cleaned of foreign matter before being lowered into the trench and shall be kept clean during laying operations by plugging or other approved method. Before installation, the pipe shall be inspected for defects. Material found to be defective before or after laying shall be replaced with sound material without additional expense to the Government. Rubber gaskets that are not to be installed immediately shall be stored in a cool and dark place.

1.5.1 Polyethylene (PE) Pipe Fittings and Accessories

PE pipe, fittings, and accessories shall be handled in conformance with AWWA C901.

1.5.2 Miscellaneous Plastic Pipe and Fittings

Polyvinyl Chloride (PVC), Reinforced Thermosetting Resin Pipe (RTRP), and Reinforced Plastic Mortar Pressure (RPMP) pipe and fittings shall be handled and stored in accordance with the manufacturer's recommendations. Storage facilities shall be classified and marked in accordance with NFPA 704, with classification as indicated in NFPA 49 and NFPA 325-1.

PART 2 PRODUCTS

2.1 PIPE

Pipe shall conform to the respective specifications and other requirements specified below.

2.1.1 Plastic Pipe

2.1.1.1 PE Plastic Pipe

Pipe, tubing, and heat-fusion fittings shall conform to AWWA C901.

2.1.1.2 PVC Plastic Pipe

Pipe, couplings and fittings shall be manufactured of material conforming to ASTM D 1784, Class 12454B.

a. Pipe Less Than 100 mm (4 inch) Diameter:

(1) Screw-Joint: Pipe shall conform to dimensional requirements of ASTM D 1785 Schedule 80, with joints meeting requirements of 1.03 MPa (150 psi) working pressure, 1.38 MPa (200 psi) hydrostatic test pressure, unless otherwise shown or specified. Pipe couplings when used, shall be tested as required by ASTM D 2464.

(2) Elastomeric-Gasket Joint: Pipe shall conform to dimensional requirements of ASTM D 1785 Schedule 40, with joints meeting the requirements of 1.03 MPa (150 psi) working pressure, 1.38 MPa (200 psi) hydrostatic test pressure, unless otherwise shown or specified, or it may be pipe conforming to requirements of ASTM D 2241, elastomeric joint, with the following applications:

SDR	Maximum Working Pressure MPa	Minimum Hydrostatic Pressure MPa
26	0.689	0.917
21	0.827	1.103
17	1.034	1.379
13.5	1.379	1.834

(3) Solvent Cement Joint: Pipe shall conform to dimensional requirements of ASTM D 1785 or ASTM D 2241 with joints meeting the requirements of 1.03 MPa (150 psi) working pressure and 1.38 MPa (200 psi) hydrostatic test pressure.

b. Pipe 100 through 300 mm Diameter: Pipe, couplings and fittings shall conform to AWWA C900, Class 150, CIOD pipe dimensions, elastomeric-gasket joint, unless otherwise shown or specified.

2.1.1.3 Oriented Polyvinyl Chloride (PVCO) Plastic Pipe

Pipe, couplings, and fittings shall be manufactured of material conforming to ASTM D 1784, Class 1245B. Pipe shall conform to AWWA C900, Class 150, and to ASTM F 1483 and shall have an outside diameter equal to cast iron outside diameter.

2.1.2 Reinforced Plastic Mortar Pressure (RPMP) Pipe

AWWA C950.

2.1.3 Reinforced Thermosetting Resin Pipe (RTRP)

Pipe shall have a quick-burst strength greater than or equal to four times the normal working pressure of the pipe. The quick-burst strength test shall conform to the requirements of ASTM D 1599.

2.1.3.1 RTRP-I

RTRP-I shall conform to ASTM D 2996, except pipe shall have an outside diameter equal to cast iron outside diameter or standard weight steel pipe. The pipe shall be suitable for a normal working pressure of 1.03 MPa (150 psi) at 23 degrees C. The inner surface of the pipe shall have a smooth uniform continuous resin-rich surface liner conforming to ASTM D 2996.

2.1.3.2 RTRP-II

RTRP-II shall conform to ASTM D 2997. Pipe shall have an outside diameter equal to standard weight steel pipe.

2.1.4 Ductile-Iron Pipe

Ductile-iron pipe shall conform to AWWA ANSI/AWWA C151/A21.51, working pressure not less than 1.03 MPa (150 psi), unless otherwise shown or specified. Pipe shall be cement-mortar lined in accordance with AWWA ANSI/AWWA C104/A21.4. Linings shall be standard. When installed underground, pipe shall be encased with 4 mm thick polyethylene in accordance with AWWA ANSI/AWWA C105/A21.5. Flanged ductile iron pipe with threaded flanges shall be in accordance with AWWA ANSI/AWWA C115/A21.15.

2.2 FITTINGS AND SPECIALS

2.2.1 PVC Pipe System

a. For pipe less than 100 mm (4 inch) diameter, fittings for threaded pipe shall conform to requirements of ASTM D 2464, threaded to conform to the requirements of ASME B1.20.1 for use with Schedule 80 pipe and fittings; fittings for solvent cement jointing shall conform to ASTM D 2466 or ASTM D 2467; and fittings for elastomeric-gasket joint pipe shall be iron conforming to AWWA ANSI/AWWA C110/A21.10 or AWWA ANSI/AWWA C111/A21.11. Iron fittings and specials shall be cement-mortar lined (standard thickness) in accordance with AWWA ANSI/AWWA C104/A21.4.

b. For pipe 100 mm (4 inch) diameter and larger, fittings and specials shall be iron, bell end in accordance with AWWA ANSI/AWWA C110/A21.10, 1.03 MPa (150 psi) pressure rating unless otherwise shown or specified, except that profile of bell may have special dimensions as required by the pipe manufacturer; or fittings and specials may be of the same material as the pipe with elastomeric gaskets, all in conformance with AWWA C900. Iron fittings and specials shall be cement-mortar lined (standard thickness) in accordance with AWWA ANSI/AWWA C104/A21.4. Fittings shall be bell and spigot or plain end pipe, or as applicable. Ductile iron compact fittings shall be in accordance with AWWA ANSI/AWWA C153/A21.53.

2.2.2 RTRP and RPMP Pipe

Fittings and specials shall be compatible with the pipe supplied. Filament wound or molded fittings up to 150 mm (6 inches) shall conform to AWWA C950. Iron fittings shall be cement-mortar lined in accordance with AWWA ANSI/AWWA C104/A21.4 and shall conform to AWWA ANSI/AWWA C110/A21.10 and AWWA ANSI/AWWA C111/A21.11. Fittings shall be suitable for working and testing pressures specified for the pipe.

2.2.3 Ductile-Iron Pipe System

Fittings and specials shall be suitable for 1.03 MPa (150 psi) pressure rating, unless otherwise specified. Fittings and specials for mechanical joint pipe shall conform to AWWA ANSI/AWWA C110/A21.10. Fittings and specials for use with push-on joint pipe shall conform to AWWA ANSI/AWWA C110/A21.10 and AWWA ANSI/AWWA C111/A21.11. Fittings and specials for grooved and shouldered end pipe shall conform to AWWA C606. Fittings and specials shall be cement-mortar lined (standard thickness) in accordance with AWWA ANSI/AWWA C104/A21.4. Ductile iron compact fittings shall conform to AWWA ANSI/AWWA C153/A21.53.

2.3 JOINTS

2.3.1 Plastic Pipe Jointing

2.3.1.1 PE Pipe

Joints for pipe fittings and couplings shall be strong tight joints as specified for PE in Paragraph INSTALLATION. Joints connecting pipe of differing materials shall be made in accordance with the manufacturer's recommendation, and as approved by the Contracting Officer.

2.3.1.2 PVC Pipe

Joints, fittings, and couplings shall be as specified for PVC pipe. Joints connecting pipe of differing materials shall be made in accordance with the manufacturer's recommendations, and as approved by the Contracting Officer.

2.3.1.3 PVCO Pipe

Joints shall conform to ASTM D 3139. Elastomeric gaskets shall conform to ASTM F 477.

2.3.2 RPMP Pipe

Joints shall be mechanical or bell and spigot type with elastomeric gasket.

2.3.3 RTRP Pipe

2.3.3.1 RTRP-I, Grade 1 and 2

Joints shall be bell and spigot with elastomeric gasket, mechanical coupling with elastomeric gasket, threaded and bonded coupling, or tapered bell and spigot with compatible adhesive. All RTRP-I materials shall be products of a single manufacturer.

2.3.3.2 RTRP-II, Grade 1 and 2

Joints shall be the bell and spigot type with elastomeric gasket, bell and spigot with adhesive, butt-jointed with adhesive bonded reinforced overlay, mechanical, flanged, threaded or commercially available proprietary joints, provided they are capable of conveying water at the pressure and temperature of the pipe.

2.3.4 Ductile-Iron Pipe Jointing

a. Mechanical joints shall be of the stuffing box type and shall conform to AWWA ANSI/AWWA C111/A21.11.

b. Push-on joints shall conform to AWWA ANSI/AWWA C111/A21.11.

c. Rubber gaskets and lubricants shall conform to the applicable requirements of AWWA ANSI/AWWA C111/A21.11.

2.3.5 Isolation Joints

Isolation joints shall be installed between nonthreaded ferrous and nonferrous metallic pipe, fittings and valves. Isolation joints shall consist of a sandwich-type flange isolation gasket of the dielectric type, isolation washers, and isolation sleeves for flange bolts. Isolation gaskets shall be full faced with outside diameter equal to the flange outside diameter. Bolt isolation sleeves shall be full length. Units shall be of a shape to prevent metal-to-metal contact of dissimilar metallic piping elements.

a. Sleeve-type couplings shall be used for joining plain end pipe sections. The two couplings shall consist of one steel middle ring, two steel followers, two gaskets, and the necessary steel bolts and nuts to compress the gaskets.

b. Split-sleeve type couplings may be used in aboveground installations when approved in special situations and shall consist of gaskets and a housing in two or more sections with the necessary bolts and nuts.

2.4 VALVES

2.4.1 Gate Valves

Gate valves shall be designed for a working pressure of not less than 1.03 MPa (150 psi). Valve connections shall be as required for the piping in which they are installed. Valves shall have a clear waterway equal to the full nominal diameter of the valve, and shall be opened by turning counterclockwise. The operating nut or wheel shall have an arrow, cast in the metal, indicating the direction of opening.

a. Valves smaller than 80 mm (3 inches) shall be all bronze and shall conform to MSS SP-80, Type 1, Class 150.

b. Valves 80 mm (3 inches) and larger shall be iron body, bronze mounted, and shall conform to AWWA C500. Flanges shall not be buried. An approved pit shall be provided for all flanged connections.

c. Resilient-Seated Gate Valves: For valves 80 to 300 mm (3 to 12 inches) in size, resilient-seated gate valves shall conform to AWWA C509.

2.4.2 Indicator Post for Valves

Each valve shown on the drawings with the designation "P.I.V." shall be equipped with indicator post conforming to the requirements of NFPA 24. Operation shall be by a wrench which shall be attached to each post.

2.5 VALVE BOXES

Valve boxes shall be cast iron or concrete, except that concrete boxes may be installed only in locations not subjected to vehicular traffic. Cast-iron boxes shall be extension type with slide-type adjustment and with flared base. The minimum thickness of metal shall be 5 mm. Concrete boxes shall be the standard product of a manufacturer of precast concrete equipment. The word "WATER" shall be cast in the cover. The box length shall adapt, without full extension, to the depth of cover required over the pipe at the valve location.

2.6 VALVE PITS

Valve pits shall be constructed at locations indicated or as required above and in accordance with the details shown. Concrete shall have compressive strength of 21 MPa in accordance with SECTION 03300 CAST-IN-PLACE STRUCTURAL CONCRETE.

2.7 FIRE HYDRANTS

Hydrants shall be dry-barrel type conforming to AWWA ANSI/AWWA C502 with valve opening at least 125 mm (5 inches) in diameter and designed so that the flange at the main valve seat can be removed with the main valve seat apparatus remaining intact, closed and reasonably tight against leakage and with a breakable valve rod coupling and breakable flange connections located no more than 200 mm above the ground grade. Hydrants shall have a 150 mm (6 inch) bell connection, two 65 mm (2-1/2 inch) hose connections and one 115 mm (4-1/2 inch) pumper connection. Outlets shall have American National Standard fire-hose coupling threads. Working parts shall be bronze. Design, material, and workmanship shall be equal to the latest stock pattern ordinarily produced by the manufacturer. Hydrants shall be painted with 1 coat of red iron oxide, zinc oxide primer conforming to SSPC Paint 25 and 2 finish coats of silicone alkyd paint conforming to SSPC Paint 21, of the installation's standard colors . Suitable bronze adapter for eachoutlet, with caps, shall be furnished.

2.8 MISCELLANEOUS ITEMS

2.8.1 Service Clamps

Service clamps shall have a pressure rating not less than that of the pipe to be connected and shall be either the single or double flattened strap type. Clamps shall have a galvanized malleable-iron body with cadmium plated straps and nuts. Clamps shall have a rubber gasket cemented to the body.

2.8.2 Corporation Stops

Corporation stops shall have standard corporation stop thread conforming to AWWA C800 on the inlet end, with flanged joints, compression pattern flared tube couplings, or wiped joints for connections to goosenecks.

2.8.3 Service Stops

Service stops shall be water-works inverted-ground-key type, oval or round flow way, tee handle, without drain. Pipe connections shall be suitable for the type of service pipe used. All parts shall be of bronze with female iron-pipe-size connections or compression-pattern flared tube couplings, and shall be designed for a hydrostatic test pressure not less than 1.375 MPa (200 psi).

2.8.4 Tapping Sleeves

Tapping sleeves of the sizes indicated for connection to existing main shall be the cast gray, ductile, or malleable iron, split-sleeve type with flanged or grooved outlet, and with bolts, follower rings and gaskets on each end of the sleeve. Construction shall be suitable for a maximum working pressure of 1.03MPa. Bolts shall have square heads and hexagonal nuts. Longitudinal gaskets and mechanical joints with gaskets shall be as recommended by the manufacturer of the sleeve. When using grooved mechanical tee, it shall consist of an upper housing with full locating collar for rigid positioning which engages a machine-cut hole in pipe, encasing an elastomeric gasket which conforms to the pipe outside diameter around the hole and a lower housing with positioning lugs, secured together during assembly by nuts and bolts as specified, pretorqued to 67.8 Newton meters (50 foot-pound).

2.9.5 Disinfection

Chlorinating materials shall conform to the following:

Chlorine, Liquid: AWWA B301.

Hypochlorite, Calcium and Sodium: AWWA B300.

2.9.6 Meters

Meters shall be the type and size shown on the drawings or specified. Meters of each of the various types furnished and installed shall be supplied by one manufacturer.

2.9.6.1 Displacement Type

Displacement type meters shall conform to AWWA ANSI/AWWA C700. Registers shall be straight-reading and shall read in cubic meters . Meters in sizes 13 through 25 mm shall be frost-protection design. Connections shall be suitable to the type of pipe and conditions encountered. Register type shall be a direct reading remote register designed in accordance with AWWA C706. Meters shall comply with the accuracy and capacity requirements of AWWA ANSI/AWWA C700.

2.9.6.2 Turbine Type

Turbine type meters shall conform to AWWA C701 Class II. The main casing shall be bronze with stainless steel external fasteners. Registers shall be straight-reading type, shall be permanently sealed and shall read in cubic meters . Connections shall be suitable to the type of pipe and conditions encountered. Register type shall be [a direct reading remote register designed in accordance with AWWA C706. Meters shall comply with the accuracy and capacity requirements of AWWA C701.

2.9.7 Meter Boxes

Meter boxes shall be of cast iron, or concrete. The boxes shall be of sufficient size to completely enclose the meter and shutoff valve or service stop. Meter boxes set in paved areas subject to vehicular traffic shall be cast iron, or concrete with cast iron lid and cast iron meter reader lid. Box height shall extend from invert of the meter to final grade at the meter location. The lid shall have the word "WATER" cast in it.

PART 3 EXECUTION

3.1 INSTALLATION

3.1.1 Cutting of Pipe

Cutting of pipe shall be done in a neat and workmanlike manner without damage to the pipe. Unless otherwise recommended by the manufacturer and authorized by the Contracting Officer, cutting shall be done with an approved type mechanical cutter. Wheel cutter shall be used when practicable. Copper tubing shall be cut square and all burrs shall be removed. Squeeze type mechanical cutters shall not be used for ductile iron.

3.1.2 Adjacent Facilities

3.1.2.1 Sewer Lines

Where the location of the water pipe is not clearly defined in dimensions on the drawings, the water pipe shall not be laid closer horizontally than 3 m from a sewer except where the bottom of the water pipe will be at least 300 mm above the top of the sewer pipe, in which case the water pipe shall not be laid closer horizontally than 1.8 m from the sewer. Where water lines cross under gravity-flow sewer lines, the sewer pipe, for a distance of at least 3 m each side of the crossing, shall be fully encased in concrete or shall be made of pressure pipe with no joint located within 900 mm horizontally of the crossing. Water lines shall in all cases cross above sewage force mains or inverted siphons and shall be not less than 600 mm above the sewer main. Joints in the sewer main, closer horizontally than 900 mm to the crossing, shall be encased in concrete.

3.1.2.2 Water Lines

Water lines shall not be laid in the same trench with sewer lines, gas lines, fuel lines, or electric wiring.

3.1.2.3 Nonferrous Metallic Pipe

Where nonferrous metallic pipe, e.g. copper tubing, crosses any ferrous piping material, a minimum vertical separation of 300 mm shall be maintained between pipes.

3.1.2.4 Structures

Where water pipe is required to be installed within 1 m of existing structures, the water pipe shall be sleeved as required in Paragraph "Casing Pipe". The Contractor shall install the water pipe and sleeve ensuring that there will be no damage to the structures and no settlement or movement of foundations or footings.

3.1.3 Joint Deflection

3.1.3.1 Offset for Flexible Plastic Pipe

Maximum offset in alignment between adjacent pipe joints shall be as recommended by the manufacturer and approved by the Contracting Officer, but shall not exceed 5 degrees.

3.1.3.2 Allowable for Ductile-Iron Pipe

The maximum allowable deflection shall be as given in AWWA C600. If the alignment requires deflection in excess of the above limitations, special bends or a sufficient number of shorter lengths of pipe shall be furnished to provide angular deflections within the limit set forth.

3.1.4 Placing and Laying

Pipe and accessories shall be carefully lowered into the trench by means of derrick, ropes, belt slings, or other authorized equipment. Water-line materials shall not be dropped or dumped into the trench. Abrasion of the pipe coating shall be avoided. Except where necessary in making connections with other

lines or as authorized by the Contracting Officer, pipe shall be laid with the bells facing in the direction of laying. The full length of each section of pipe shall rest solidly upon the pipe bed, with recesses excavated to accommodate bells, couplings, and joints. Pipe that has the grade or joint disturbed after laying shall be taken up and relaid. Pipe shall not be laid in water or when trench conditions are unsuitable for the work. Water shall be kept out of the trench until joints are complete. When work is not in progress, open ends of pipe, fittings, and valves shall be securely closed so that no trench water, earth, or other substance will enter the pipes or fittings. Where any part of the coating or lining is damaged, the repair shall be made by and at the Contractor's expense in a satisfactory manner. Pipe ends left for future connections shall be valved, plugged, or capped, and anchored, as shown.

3.1.4.1 Plastic Pipe Installation

RTRP shall be installed in accordance with ASTM D 3839. RPMP shall be installed in accordance with the manufacturer's recommendations. PE Pipe shall be installed in accordance with ASTM D 2774. PVC pipe shall be installed in accordance with AWWA M23.

3.1.4.2 Piping Connections

Where connections are made between new work and existing mains, the connections shall be made by using specials and fittings to suit the actual conditions. When made under pressure, these connections shall be installed using standard methods as approved by the Contracting Officer. Connections to existing asbestos-cement pipe shall be made in accordance with ACPPA-01.

3.1.4.3 Penetrations

Pipe passing through walls of valve pits and structures shall be provided with ductile-iron or Schedule 40 steel wall sleeves. Annular space between walls and sleeves shall be filled with rich cement mortar. Annular space between pipe and sleeves shall be filled with mastic.

3.1.4.4 Flanged Pipe

Flanged pipe shall only be installed above ground or with the flanges in valve pits.

3.1.5 Jointing

3.1.5.1 PE Pipe Requirements

Jointing shall comply with ASTM D 2657, Technique I-Socket Fusion or Technique II-Butt Fusion.

3.1.5.2 PVC Plastic Pipe Requirements

a. Pipe less than 100 mm (4 inch) diameter: Threaded joints shall be made by wrapping the male threads with approved thread tape or applying an approved lubricant, then threading the joining members together. The joint shall be tightened using strap wrenches to prevent damage to the pipe and/or fitting. To avoid excessive torque, joints shall be tightened no more than one thread past hand-tight. Preformed rubber-ring gaskets for elastomeric-gasket joints shall be made in accordance with ASTM F 477 and as specified. Pipe ends for push-on joints shall be beveled to facilitate assembly and marked to indicate when the pipe is fully seated. The gasket shall be prelubricated to prevent displacement. The gasket and ring

groove in the bell or coupling shall match. The manufacturer of the pipe or fitting shall supply the elastomeric gasket. Couplings shall be provided with stops or centering rings to assure that the coupling is centered on the joint. Solvent cement joints shall use sockets conforming to ASTM D 2467. The solvent cement used shall meet the requirements of ASTM D 2564; the joint assembly shall be made in accordance with ASTM D 2855 and the manufacturer's specific recommendations.

b. Pipe 100 through 300 mm diameter: Joints shall be elastomeric gasket as specified in AWWA C900. Jointing procedure shall be as specified for pipe less than 100 mm (4 inch) diameter with configuration using elastomeric ring gasket.

c. Pipe 350 through 900 mm diameter: Joints shall be elastomeric gasket push-on joints made in accordance with AWWA M23.

3.1.5.3 RTRP I, RTRP II and RPMP Pipe

a. RTRP I: Assembly of the pipe shall be done in conformance with the manufacturer's written instruction and installation procedures. Field joints shall be prepared as specified by the pipe manufacturer. Several pipe joints having interference-fit type couplings may be field bonded and cured simultaneously. However, the pipe shall not be moved and additional joints shall not be made until the previously laid joints are completely cured. Joints not having interference-fit type coupling shall be fitted with a clamp which shall hold the joint rigidly in place until the joint cement has completely cured. The clamps shall have a protective material on the inner surface to prevent damage to the plastic pipe when the clamp is tightened in place. The pipe manufacturer shall provide a device or method to determine when the joint is pulled against the pipe stop. Additionally, the pipe manufacturer shall furnish a gauge to measure the diameter of the spigot ends to ensure the diameter conforms to the tolerances specified by the manufacturer. All pipe ends shall be gauged. Factory certified tests shall have been satisfactorily performed to verify that short-term rupture strength is 10.3 MPa (1,500 psi) or greater when carried out in accordance with ASTM D 1599. At any ambient temperature, field bonded epoxy-cemented joints shall be cured with a self-regulating, thermostatically temperature controlled, electrical heating blanket for the time and temperature recommended by the manufacturer for the applicable size and type of joint, or by an alternate heating method recommended by the manufacturer and approved by the Contracting Officer. The joint sections shall not be moved during heating, or until the joint has cooled to ambient temperature.

b. RTRP II: A reinforced overlay joint shall be used to join sections together through a placement of layers of reinforcement fiberglass roving, mat, tape or fabric thoroughly saturated with compatible catalyzed resin.

c. Fittings and Specials for RTRP and RPMP Pipe: Metal to RTRP and RPMP pipe connections shall be made by bolting steel flanges to RTRP and RPMP pipe flanges. Cast-iron fitting with gasket bell or mechanical joint may be used with RTRP if pipe has cast iron outside diameter. Steel flanges shall be flat-faced type. Where raised-face steel flanges are used, spacer rings shall be used to provide a flat-face seat for RTRP and RPMP pipe flanges. A full-face Buna "N" gasket 3 mm (1/8 inch) thick with a shore hardness of 50-60 shall be used between all flanged connections. The RTRP and RPMP pipe flange shall have raised sealing rings. Flat washers shall be used under all nuts and bolts on RTRP and RPMP pipe flanges.

Bolts and nuts shall be of noncorrosive steel and torqued to not more than 135 Newton meters. Flanges shall not be buried. A concrete pit shall be provided for all flanged connections.

3.1.5.4 Ductile-Iron Pipe Requirements

Mechanical and push-on type joints shall be installed in accordance with AWWA C600 for buried lines or AWWA C606 for grooved and shouldered pipe above ground or in pits.

3.1.5.5 Isolation Joints and Dielectric Fittings

Isolation joints and dielectric fittings shall be installed in accordance with details specified in paragraph JOINTS. Dielectric unions shall be encapsulated in a field-poured coal-tar covering, with at least 3 mm thickness of coal tar over all fitting surfaces.

3.1.5.6 Transition Fittings

Connections between different types of pipe and accessories shall be made with transition fittings approved by the Contracting Officer.

3.1.6 Installation of Service Lines

Service lines shall include the pipeline connecting building piping to water distribution lines to the connections with the building service at a point approximately 1.5 m outside the building where such building service exists. Where building services are not installed, the Contractor shall terminate the service lines approximately 1.5 m from the site of the proposed building at a point designated by the Contracting Officer. Such service lines shall be closed with plugs or caps. All service stops and valves shall be provided with service boxes. Service lines shall be constructed in accordance with the following requirements:

3.1.6.1 Service Lines Larger than 50 mm (2 Inches)

Service lines larger than 50 mm (2 inches) shall be connected to the main by a tapped saddle, tapping sleeve and valve, service clamp or reducing tee, depending on the main diameter and the service line diameter, and shall have a gate valve. Lines 80 mm (3 inches) and larger may use rubber-seated butterfly valves as specified above, or gate valves.

3.1.6.2 Service Lines for Sprinkler Supplies

Water service lines used to supply building sprinkler systems for fire protection shall be connected to the water distribution main in accordance with NFPA 24.

3.1.7 Setting of Fire Hydrants, Meters, Valves and Valve Boxes

3.1.7.1 Location of Fire Hydrants

Fire hydrants shall be located and installed as shown. Each hydrant shall be connected to the main with a 150 mm branch line having at least as much cover as the distribution main. Hydrants shall be set plumb with pumper nozzle facing the roadway, with the center of the lowest outlet not less than 450 mm

above the finished surrounding grade, and the operating nut not more than 1.2 m above the finished surrounding grade. Fire hydrants designated on the drawings as low profile shall have the lowest outlet not less than 450 mm above the finished surrounding grade, the top of the hydrant not more than 600 mm above the finished surrounding grade. Except where approved otherwise, the backfill around hydrants shall be thoroughly compacted to the finished grade immediately after installation to obtain beneficial use of the hydrant as soon as practicable. The hydrant shall be set upon a slab of concrete not less than 100 mm thick and 400 mm square. Not less than 2 cubic meters of free-draining broken stone or gravel shall be placed around and beneath the waste opening of dry barrel hydrants to ensure drainage.

3.1.7.2 Location of Meters

Meters and meter boxes shall be installed at the locations shown on the drawings. The meters shall be centered in the boxes to allow for reading and ease of removal or maintenance.

3.1.7.3 Location of Valves

After delivery, valves, including those in hydrants, shall be drained to prevent freezing and shall have the interiors cleaned of all foreign matter before installation. Stuffing boxes shall be tightened and hydrants and valves shall be fully opened and fully closed to ensure that all parts are in working condition. Check, pressure reducing, vacuum, and air relief valves shall be installed in valve pits. Valves and valve boxes shall be installed where shown or specified, and shall be set plumb. Valve boxes shall be centered on the valves. Boxes shall be installed over each outside gate valve unless otherwise shown. Where feasible, valves shall be located outside the area of roads and streets. Earth fill shall be tamped around each valve box or pit to a distance of 1.2 m on all sides of the box, or the undisturbed trench face if less than 1.2 m.

3.1.8 Tapped Tees and Crosses

Tapped tees and crosses for future connections shall be installed where shown.

3.1.9 Thrust Restraint

Plugs, caps, tees and bends deflecting 11.25 degrees or more, either vertically or horizontally, on waterlines 100 mm (4 inches) in diameter or larger, and fire hydrants shall be provided with thrust restraints. Valves shall be securely anchored or shall be provided with thrust restraints to prevent movement. Thrust restraints shall be either thrust blocks or, for ductile-iron pipes, restrained joints.

3.1.9.1 Thrust Blocks

Thrust blocking shall be concrete of a mix not leaner than: 1 cement, 2-1/2 sand, 5 gravel; and having a compressive strength of not less than 14 MPa after 28 days. Blocking shall be placed between solid ground and the hydrant or fitting to be anchored. Unless otherwise indicated or directed, the base and thrust bearing sides of thrust blocks shall be poured directly against undisturbed earth. The sides of thrust blocks not subject to thrust may be poured against forms. The area of bearing shall be as shown or as directed. Blocking shall be placed so that the fitting joints will be accessible for repair. Steel rods and clamps, protected by galvanizing or by coating with bituminous paint, shall be used to anchor vertical down bends into gravity thrust blocks.

3.1.9.2 Restrained Joints

For ductile-iron pipe, restrained joints shall be designed by the Contractor or the pipe manufacturer in accordance with DIPRA-01.

3.2 HYDROSTATIC TESTS

Where any section of a water line is provided with concrete thrust blocking for fittings or hydrants, the hydrostatic tests shall not be made until at least 5 days after installation of the concrete thrust blocking, unless otherwise approved.

3.2.1 Pressure Test

After the pipe is laid, the joints completed, fire hydrants permanently installed, and the trench partially backfilled leaving the joints exposed for examination, the newly laid piping or any valved section of piping shall, unless otherwise specified, be subjected for 1 hour to a hydrostatic pressure test of 1.38MPa. Water supply lines designated on the drawings shall be subjected for 1 hour to a hydrostatic pressure test of 1.38 MPa. Each valve shall be opened and closed several times during the test. Exposed pipe, joints, fittings, hydrants, and valves shall be carefully examined during the partially open trench test. Joints showing visible leakage shall be replaced or remade as necessary. Cracked or defective pipe, joints, fittings, hydrants and valves discovered in consequence of this pressure test shall be removed and replaced with sound material, and the test shall be repeated until the test results are satisfactory. The requirement for the joints to remain exposed for the hydrostatic tests may be waived by the Contracting Officer when one or more of the following conditions is encountered:

a. Wet or unstable soil conditions in the trench.

b. Compliance would require maintaining barricades and walkways around and across an open trench in a heavily used area that would require continuous surveillance to assure safe conditions.

c. Maintaining the trench in an open condition would delay completion of the project.

The Contractor may request a waiver, setting forth in writing the reasons for the request and stating the alternative procedure proposed to comply with the required hydrostatic tests. Backfill placed prior to the tests shall be placed in accordance with the requirements of SECTION 02316EXCAVATION, TRENCHING, AND BACKFILLING FOR UTILITIES SYSTEMS.

3.2.2 Leakage Test

Leakage test shall be conducted after the pressure tests have been satisfactorily completed. The duration of each leakage test shall be at least 2 hours, and during the test the water line shall be subjected to not less than 1.38MPa pressure. Water supply lines designated on the drawings shall be subjected to a pressure equal to 1.38 MPa. Leakage is defined as the quantity of water to be supplied into the newly laid pipe, or any valved or approved section, necessary to maintain pressure within 34.5 kPa (5 psi) of the specified leakage test pressure after the pipe has been filled with water and the air expelled. Piping

installation will not be accepted if leakage exceeds the allowable leakage which is determined by the following formula:

L = 0.0001351ND(P raised to 0.5 power)

L = Allowable leakage in gallons per hour
N = Number of joints in the length of pipeline tested
D = Nominal diameter of the pipe in inches
P = Average test pressure during the leakage test, in psi gauge

Should any test of pipe disclose leakage greater than that calculated by the above formula, the defective joints shall be located and repaired until the leakage is within the specified allowance, without additional cost to the Government.

3.2.3 Time for Making Test

Except for joint material setting or where concrete thrust blocks necessitate a 5-day delay, pipelines jointed with rubber gaskets, mechanical or push-on joints, or couplings may be subjected to hydrostatic pressure, inspected, and tested for leakage at any time after partial completion of backfill. Cement-mortar lined pipe may be filled with water as recommended by the manufacturer before being subjected to the pressure test and subsequent leakage test.

3.2.4 Concurrent Hydrostatic Tests

The Contractor may elect to conduct the hydrostatic tests using either or both of the following procedures. Regardless of the sequence of tests employed, the results of pressure tests, leakage tests, and disinfection shall be as specified. Replacement, repair or retesting required shall be accomplished by the Contractor at no additional cost to the Government.

a. Pressure test and leakage test may be conducted concurrently.

b. Hydrostatic tests and disinfection may be conducted concurrently, using the water treated for disinfection to accomplish the hydrostatic tests. If water is lost when treated for disinfection and air is admitted to the unit being tested, or if any repair procedure results in contamination of the unit, disinfection shall be reaccomplished.

3.3 DISINFECTION

3.3.1 Bacteriological Disinfection

Before acceptance of potable water operation, each unit of completed waterline shall be disinfected as prescribed by AWWA C651. After pressure tests have been made, the unit to be disinfected shall be thoroughly flushed with water until all entrained dirt and mud have been removed before introducing the chlorinating material. The chlorinating material shall be either liquid chlorine, calcium hypochlorite, or sodium hypochlorite, conforming to paragraph MISCELLANEOUS ITEMS. The chlorinating material shall provide a dosage of not less than 50 ppm and shall be introduced into the water lines in an approved manner. Polyvinyl Chloride (PVC) pipe lines shall be chlorinated using only the above specified chlorinating material in solution. The agent shall not be introduced into the line in a dry solid state. The treated water shall be retained in the pipe long enough to destroy all non-spore forming

bacteria. Except where a shorter period is approved, the retention time shall be at least 24 hours and shall produce not less than 25 ppm of free chlorine residual throughout the line at the end of the retention period. Valves on the lines being disinfected shall be opened and closed several times during the contact period. The line shall then be flushed with clean water until the residual chlorine is reduced to less than 1.0 ppm. During the flushing period, each fire hydrant on the line shall be opened and closed several times.] From several points in the unit, personnel from the Contractor's commercial laboratory shall take at least 3 water samples from different points, approved by the Contracting Officer, in proper sterilized containers and perform a bacterial examination in accordance with state approved methods. The commercial laboratory shall be certified by the state's approving authority for examination of potable water. The disinfection shall be repeated until tests indicate the absence of pollution for at least 2 full days. The unit will not be accepted until satisfactory bacteriological results have been obtained.

3.3.2 Lead Residual

Following the bacteriological disinfection and testing, the system shall be flushed with a sufficient velocity of water and sufficient tests performed at each hot and cold water discharge point until no more than 15 ppb lead residuals remain in the system. All tests and samples shall be performed in accordance with state and, if applicable, Federal regulations. Samples for testing are to be collected after a 6 hour continuous period of no flushing, and will be considered first draw samples. The commercial laboratory shall be certified by the state's approving authority for examination of potable water. Lead residual test results shall be submitted to the Contracting Officer. The system will not be accepted until satisfactory bacteriological results and lead residual test results have been obtained. All flushing and testing for lead residuals, including all costs, are the responsibility of the Contractor.

3.4 CLEANUP

Upon completion of the installation of water lines, and appurtenances, all debris and surplus materials resulting from the work shall be removed.

END OF SECTION

SECTION 02524

GRASS PAVING SYSTEM

PART 1 GENERAL

1.1 INSTALLER QUALIFICATIONS

Contractor shall engage a firm or firms specializing in grass paver installation. Installer shall have successfully completed five projects similar in material and scope of work to that indicated for this project. Additional qualifications include:

a. Firm experience record--2 years experience.
b. Field foreman experience--2 years experience.
c. Contractor shall be licensed, if required, to install proprietary materials.

PART 2 PRODUCTS

2.1 BASE COURSE

Base course shall conform to Section 02722 AGGREGATE BASE COURSE.

2.2 SAND

Clean, angular sand.

2.3 TOPSOIL AND SOD

Topsoil and grass sod shall conform to Section 02922 SODDING.

2.4 GRASS PAVING SYSTEM

The grass paving system shall be constructed of high impact molded plastic units. Each unit shall measure 300mm by 900mm by 50mm or 500mm by 500mm by 25mm. Units shall be constructed of a minimum of 50 percent post consumer recycled plastic. The unit shall be designed as a grid with holes (providing 82-92 percent rootzone potential) to be filled with soil and grass sod plug as indicated on drawings. Units shall be charcoal grey or black in color.

PART 3 EXECUTION

3.1 INSTALLATION

3.1.1 Subgrade shall be compacted and leveled prior to placing base course.

3.1.2 Base course shall placed to a minimum 100 mm depth, compacted and leveled to a plane parallel to the grade desired for the finished grass paver surface.

3.1.3 After base material has been installed, apply water to base to make sure water flows into base and drains properly. If there are any areas with standing water, rework the base course and subsoil, if necessary, to provide proper subsurface drainage.

3.1.4 Paver units shall be placed on the base course in accordance with manufacturers recommendations.

3.1.5 Fill rings with compacted topsoil as recommended by the manufacturer.

3.1.6 Apply sod per Section 02922 SODDING. Maintenance and establishment of turf shall also be per Section 02922 SODDING.

3.1.7 No traffic of any kind shall be permitted on grass pavers until grass is established and has been fully accepted. Thereafter, vehicles permitted shall not exceed 10 ton capacity.

END OF SECTION

SECTION 02531

SANITARY SEWERS

PART 1 GENERAL

1.1 REFERENCES

The publications listed below form a part of this specification to the extent referenced. The publications are referred to in the text by basic designation only.

AMERICAN RAILWAY ENGINEERING ASSOCIATION (AREA)

AREA-01	(1996) 1996-1997 Manual for Railway Engineering (Fixed Properties) 4 Vol.

AMERICAN SOCIETY FOR TESTING AND MATERIALS (ASTM)

ASTM A 123	(1989a) Zinc (Hot-Dip Galvanized) Coatings on Iron and Steel Products
ASTM C 14M	(1995) Concrete Sewer, Storm Drain, and Culvert Pipe (Metric)
ASTM C 33	(1993) Concrete Aggregates
ASTM C 76M	(1996) Reinforced Concrete Culvert, Storm Drain, and Sewer Pipe (Metric)
ASTM C 94	(1996) Ready-Mixed Concrete
ASTM C 150	(1997) Portland Cement
ASTM C 260	(1995) Air-Entraining Admixtures for Concrete
ASTM C 270	(1997) Mortar for Unit Masonry
ASTM C 443M	(1994) Joints for Circular Concrete Sewer and Culvert Pipe, Using Rubber Gaskets (Metric)
ASTM C 478M	(1996) Precast Reinforced Concrete Manhole Sections (Metric)
ASTM C 924	(1989) Concrete Pipe Sewer Lines by Low-Pressure Air Test Method
ASTM C 972	(1995) Compression-Recovery of Tape Sealant

ASTM D 412	(1992) Vulcanized Rubber and Thermoplastic Rubbers and Thermoplastic Elastomers - Tension
ASTM D 624	(1991; R 1996) Tear Strength of Conventional Vulcanized Rubber and Thermoplastic Elastomers
ASTM D 1784	(1996) Rigid Poly(Vinyl Chloride) (PVC) Compounds and Chlorinated Poly(Vinyl Chloride) (CPVC) Compounds
ASTM D 2680	(1995a)Acrylonitrile-Butadiene-Styrene (ABS) and Poly(Vinyl Chloride) (PVC) Composite Sewer Piping
ASTM D 2751	(1996) Acrylonitrile-Butadiene-Styrene (ABS) Sewer Pipe and Fittings
ASTM D 2996	(1995) Filament-Wound "Fiberglass" (Glass-Fiber-Reinforced Thermosetting-Resin) Pipe
ASTM D 2997	(1995) Centrifugally Cast "Fiberglass" (Glass-Fiber-Reinforced-Thermosetting-Resin) Pipe
ASTM D 3034	(1994) Type PSM Poly(Vinyl Chloride) (PVC) Sewer Pipe and Fittings
ASTM D 3212	(1996a) Joints for Drain and Sewer Plastic Pipes Using Flexible Elastomeric Seals
ASTM D 3262	(1996) "Fiberglass" (Glass-Fiber-Reinforced Thermosetting-Resin) Sewer Pipe
ASTM D 3350	(1996) Polyethylene Plastics Pipe and Fittings Materials
ASTM D 3840	(1988) "Fiberglass" (Glass-Fiber-Reinforced Thermosetting-Resin) Pipe Fittings for Nonpressure Applications
ASTM F 402	(1993) Safe Handling of Solvent Cements, Primers, and Cleaners Used for Joining Thermoplastic Pipe and Fittings
ASTM F 477	(1995) Elastomeric Seals (Gaskets) for Joining Plastic Pipe
ASTM F 714	(1994) Polyethylene (PE) Plastic pipe (SDR-PR) Based on Outside Diameter
ASTM F 794	(1995a) Poly(Vinyl Chloride) (PVC) Profile Gravity Sewer Pipe and Fittings Based on Controlled Inside Diameter
ASTM F 894	(1995) Polyethylene (PE) Large Diameter Profile Wall Sewer and Drain Pipe

ASTM F 949	(1994) Poly(Vinyl Chloride) (PVC) Corrugated Sewer Pipe with a Smooth Interior and Fittings

AMERICAN WATER WORKS ASSOCIATION (AWWA)

AWWA ANSI/AWWA C105/A21.5	(1993) Polyethylene Encasement for Ductile-Iron Pipe Systems

NATIONAL FIRE PROTECTION ASSOCIATION (NFPA)

NFPA 49	(1994) Hazardous Chemicals Data
NFPA 325-1	(1994) Fire Hazard Properties of Flammable Liquids, Gases, and Volatile Solids
NFPA 704	(1996) Identification of the Fire Hazards of Materials for Emergency Response

UNI-BELL PVC PIPE ASSOCIATION (UBPPA)

UBPPA UNI-B-6	(1990) Recommended Practice for the Low-Pressure Air Testing of Installed Sewer Pipe
UBPPA UNI-B-9	(1990; Addenda 1994) Recommended Performance Specification for Polyvinyl Chloride (PVC) Profile Wall Gravity Sewer Pipe and Fittings Based on Controlled Inside Diameter (Nominal Pipe Sizes 4-48 inch)

1.2 GENERAL REQUIREMENTS

The construction required herein shall include appurtenant structures and building sewers to points of connection with the building drains 1.5 m outside the building to which the sewer system is to be connected. The Contractor shall replace damaged material and redo unacceptable work at no additional cost to the Government. Excavation and backfilling is specified in SECTION 02316 EXCAVATION, TRENCHING, AND BACKFILLING FOR UTILITIES SYSTEMS. Backfilling shall be accomplished after inspection by the Contracting Officer. Before, during, and after installation, plastic pipe and fittings shall be protected from any environment that would result in damage or deterioration to the material. The Contractor shall have a copy of the manufacturer's instructions available at the construction site at all times and shall follow these instructions unless directed otherwise by the Contracting Officer. Solvents, solvent compounds, lubricants, elastomeric gaskets, and any similar materials required to install the plastic pipe shall be stored in accordance with the manufacturer's recommendation and shall be discarded if the storage period exceeds the recommended shelf life. Solvents in use shall be discarded when the recommended pot life is exceeded.

1.3 SUBMITTALS

Government approval is required for submittals with a "GA" designation; submittals having an "FIO" designation are for information only. The following shall be submitted in accordance with SECTION 01330 SUBMITTAL PROCEDURES:

SD-13 Certificates

Portland Cement; FIO.

Certificates of compliance stating the type of cement used in manufacture of concrete pipe, fittings and precast manholes.

PART 2 PRODUCTS

2.1 PIPE

Pipe shall conform to the respective specifications and other requirements specified below.

2.1.1 Concrete Pipe

Concrete pipe 600 mm (24 inches) or less in diameter, shall be nonreinforced and conform to ASTM C 14M , Class 1. Pipe less than 900 mm (36 inches) in diameter shall be bell and spigot type.

2.1.2 Plastic Pipe

Acrylonitrile-butadiene-styrene (ABS) and polyvinyl chloride (PVC) composite sewer piping shall conform to ASTM D 2680. Size 200 mm (8 inch) through 380 mm (15 inch) diameter.

2.1.2.1 ABS Pipe

ASTM D 2751.

2.1.2.2 PVC Pipe

ASTM D 3034, Type PSM with a maximum SDR of 35, Size 380 mm (15 inch) or less in diameter. ASTM F 949 for corrugated sewer pipes with a smooth interior. UBPPA UNI-B-9 and ASTM F 794, Series 46, for ribbed sewer pipe with smooth interior, size 200 mm (8 inch) through 1200 mm (48 inch) diameters. PVC shall be certified by the compounder as meeting the requirements of ASTM D 1784, cell Class 12454B. The pipe stiffness shall be greater than or equal to 735/D for cohesionless material pipe trench backfills.

2.1.2.3 High Density Polyethylene Pipe

ASTM F 714, size 100 mm (4 inch)) through 1200 mm (48 inch). The polyethylene shall be certified by the resin producer as meeting the requirements of ASTM D 3350, cell Class 334433C. The pipe stiffness shall be greater than or equal to 1170/D for cohesionless material pipe trench backfills.

2.1.3 Reinforced Plastic Mortar Pipe (RPMP)

ASTM D 3262.

2.1.4 Reinforced Thermosetting Resin Pipe (RTRP)

ASTM D 3262.

2.1.4.1 Filament Wound RTRP-I

RTRP-I shall conform to ASTM D 2996, except pipe shall have an outside diameter equal to cast iron outside diameter or standard weight steel pipe. The pipe shall be suitable for a normal working pressure of 1.03 MPa (150 psi) at 22.8 degrees C (73 degrees F). The inner surface of the pipe shall have a smooth uniform continuous resin-rich surface liner conforming to ASTM D 2996.

2.1.4.2 Centrifugally Cast RTRP-II

RTRP-II shall conform to ASTM D 2997. Pipe shall have an outside diameter equal to standard weight steel pipe.

2.2 REQUIREMENTS FOR FITTINGS

Fittings shall be compatible with the pipe supplied and shall have a strength not less than that of the pipe. Fittings shall conform to the respective specifications and other requirements specified below.

2.2.1 Fittings for Concrete Pipe

ASTM C 14M for pipe 600 mm or less in diameter.

2.2.2 Fittings for Plastic Pipe

ABS and PVC composite sewer pipe fittings shall conform to ASTM D 2680.

2.2.2.1 Fittings for ABS Pipe

ASTM D 2751.

2.2.2.2 Fittings for PVC Pipe

ASTM D 3034 for type PSM pipe. ASTM F 949 for corrugated sewer pipe with a smooth interior. UBPPA UNI-B-9 and ASTM F 794, Series 46, for ribbed sewer pipe with smooth interior.

2.2.2.3 Fittings for High Density Polyethylene Pipe

ASTM F 894.

2.2.3 Fittings for RPMP

ASTM D 3840.

2.2.4 Fittings for RTRP

ASTM D 3262.

2.3 JOINTS

Joints installation shall comply with the manufacturer's instructions.

2.3.1 Concrete Pipe Jointing

Joints and gaskets shall conform to ASTM C 443M .

2.3.2 Plastic Pipe Jointing

Flexible plastic pipe (PVC or high density polyethylene pipe) gasketed joints shall conform to ASTM D 3212.

2.3.2.1 ABS Pipe Jointing

ASTM D 2751, solvent weld or bell and spigot O-ring joint, size 300 mm or less in diameter, dimensions and tolerances in accordance with Table 2 of ASTM D 2751.

2.3.2.2 High Density Polyethylene Pipe Jointing

Rubber gasket joints shall conform to ASTM C 443M .

2.3.3 RPMP Jointing

Joints shall be bell and spigot type utilizing an elastomeric gasket in accordance with ASTM F 477.

2.3.4 RTRP Jointing

Joints shall be bell and spigot type utilizing an elastomeric gasket in accordance with ASTM F 477.

2.4 BRANCH CONNECTIONS

Branch connections shall be made by use of regular fittings or solvent cemented saddles as approved. Saddles for ABS and PVC composite pipe shall conform to Figure 2 of ASTM D 2680; saddles for ABS pipe shall comply with Table 3 of ASTM D 2751; and saddles for PVC pipe shall conform to Table 4 of ASTM D 3034.

2.5 FRAMES AND COVERS

Frames and covers shall be cast iron or ductile iron. Cast iron frames and covers shall be as indicated or shall be of type suitable for the application, circular, without vent holes. The frames and covers shall have a combined weight of not less than 181.4 kg (400 pounds). The word "Sewer" shall be stamped or cast into covers so that it is plainly visible.

2.6 STEEL LADDER

A steel ladder shall be provided where the depth of a manhole exceeds 3.6 m (12 feet). The ladder shall not be less than 406 mm (16 inches) in width, with 19 mm (3/4 inch) diameter rungs spaced 305 mm

(12 inches) apart. The two stringers shall be a minimum 10 mm (3/8 inch) thick and 51 mm (2 inch) wide. Ladders and inserts shall be galvanized after fabrication in conformance with ASTM A 123.

2.7 CEMENT MORTAR

Cement mortar shall conform to ASTM C 270, Type M with Type II cement.

2.7.1 Portland Cement

Portland cement shall conform to ASTM C 150, Type II for concrete used in concrete pipe, concrete pipe fittings, and manholes and type optional with the Contractor for cement used in concrete cradle, concrete encasement, and thrust blocking.

2.7.2 Portland Cement Concrete

Portland cement concrete shall conform to ASTM C 94, compressive strength of 28 MPa at 28 days, except for concrete cradle and encasement or concrete blocks for manholes. Concrete used for cradle and encasement shall have a compressive strength of 17 MPa minimum at 28 days. Concrete in place shall be protected from freezing and moisture loss for 7 days.

2.8 STRUCTURES

Precast Reinforced Concrete Manhole Sections

Precast reinforced concrete manhole sections shall conform to ASTM C 478, except that portland cement shall be as specified herein. Joints shall be cement mortar, an approved mastic, rubber gaskets, a combination of these types; or the use of external preformed rubber joint seals and extruded rolls of rubber with mastic adhesive on one side.

PART 3 EXECUTION

3.1 INSTALLATION

3.1.1 Adjacent Facilities

Water Lines

Where the location of the sewer is not clearly defined by dimensions on the drawings, the sewer shall not be closer horizontally than 3 m to a water-supply main or service line, except that where the bottom of the water pipe will be at least 300 mm above the top of the sewer pipe, the horizontal spacing may be a minimum of 2 m. Where gravity-flow sewers cross above water lines, the sewer pipe for a distance of 3 m on each side of the crossing shall be fully encased in concrete or shall be acceptable pressure pipe with no joint closer horizontally than 1 m to the crossing. The thickness of the concrete encasement including that at the pipe joints shall be not less than 100 mm.

3.1.2 Pipe Laying

a. Pipe shall be protected during handling against impact shocks and free fall; the pipe interior shall be free of extraneous material.

b. Pipe laying shall proceed upgrade with the spigot ends of bell-and-spigot pipe pointing in the direction of the flow. Each pipe shall be laid accurately to the line and grade shown on the drawings. Pipe shall be laid and centered so that the sewer has a uniform invert. As the work progresses, the interior of the sewer shall be cleared of all superfluous materials.

c. Before making pipe joints, all surfaces of the portions of the pipe to be joined shall be clean and dry. Lubricants, primers, and adhesives shall be used as recommended by the pipe manufacturer. The joints shall then be placed, fitted, joined, and adjusted to obtain the degree of water tightness required.

d. ABS composite pipe ends with exposed truss and filler material shall be coated with solvent weld material before making the joint to prevent water or air passage at the joint between the inner and outer wall of the pipe.

e. Installations of solvent weld joint pipe, using ABS or PVC pipe and fittings shall be in accordance with ASTM F 402. The Contractor shall ensure adequate trench ventilation and protection for workers installing the pipe.

3.1.2.1 Caulked Joints

The packing material shall be well packed into the annular space to prevent the entrance of lead into the pipe. The remainder of the space shall be filled with molten lead that is hot enough to show a rapid change in color when stirred. Scum shall be removed before pouring. The lead shall be caulked to form a tight joint without overstraining the bell and shall have a minimum depth of 25 mm after caulking.

3.1.2.2 Trenches

Trenches shall be kept free of water and as dry as possible during bedding, laying, and jointing and for as long a period as required. When work is not in progress, open ends of pipe and fittings shall be satisfactorily closed so that no trench water or other material will enter the pipe or fittings.

3.1.2.3 Backfill

As soon as possible after the joint is made, sufficient backfill material shall be placed along the pipe to prevent pipe movement off line or grade. Plastic pipe shall be completely covered to prevent damage from ultraviolet light.

3.1.2.4 Width of Trench

If the maximum width of the trench at the top of the pipe, as specified in SECTION 02316 EXCAVATION, TRENCHING, AND BACKFILLING FOR UTILITIES SYSTEMS, is exceeded for any reason other than by direction, the Contractor shall install, at no additional cost to the Government, concrete cradling, pipe encasement, or other bedding required to support the added load of the backfill.

3.1.2.5 Jointing

Joints between different pipe materials shall be made as specified, using approved jointing materials.

3.1.2.6 Handling and Storage

Pipe, fittings and joint material shall be handled and stored in accordance with the manufacturer's recommendations. Storage facilities for plastic pipe, fittings, joint materials and solvents shall be classified and marked in accordance with NFPA 704, with classification as indicated in NFPA 49 and NFPA 325-1.

3.1.3 Leakage Tests

Lines shall be tested for leakage by low pressure air testing, infiltration tests or exfiltration tests, as appropriate. Low pressure air testing for concrete pipes shall be as prescribed in ASTM C 828. Low pressure air testing for PVC pipe shall be as prescribed in UBPPA UNI-B-6. Low pressure air testing procedures for other pipe materials shall use the pressures and testing times prescribed in ASTM C 828 and ASTM C 924, after consultation with the pipe manufacturer. Prior to infiltration or exfiltration tests, the trench shall be backfilled up to at least the lower half of the pipe. If required, sufficient additional backfill shall be placed to prevent pipe movement during testing, leaving the joints uncovered to permit inspection. Visible leaks encountered shall be corrected regardless of leakage test results. When the water table is 600 mm or more above the top of the pipe at the upper end of the pipeline section to be tested, infiltration shall be measured using a suitable weir or other device acceptable to the Contracting Officer. When the Contracting Officer determines that infiltration cannot be properly tested, an exfiltration test shall be made by filling the line to be tested with water so that a head of at least 600 mm is provided above both the water table and the top of the pipe at the upper end of the pipeline to be tested. The filled line shall be allowed to stand until the pipe has reached its maximum absorption, but not less than 4 hours. After absorption, the head shall be re-established. The amount of water required to maintain this water level during a 2-hour test period shall be measured. Leakage as measured by either the infiltration test or exfiltration test shall not exceed 50 mL per 5 mm diameter per 100 m of pipeline per hour. When leakage exceeds the maximum amount specified, satisfactory correction shall be made and retesting accomplished. Testing, correction, and retesting shall be made at no additional cost to the Government.

3.1.4 Test for Deflection

When flexible pipe is used, a deflection test shall be made on the entire length of the installed pipeline not less than 30 days after the completion of all work including the leakage test, backfill, and placement of any fill, grading, paving, concrete, or superimposed loads. Deflection shall be determined by use of a deflection device or by use of a spherical, spheroidal, or elliptical ball, a cylinder, or circular sections fused to a common shaft. The ball, cylinder, or circular sections shall have a diameter, or minor diameter as applicable, of 92.5 percent of the inside diameter of the pipe, but 95 percent for RPMP and RTRP. A tolerance of plus 0.5 percent will be permitted. The ball, cylinder, or circular sections shall be of a homogeneous material throughout, shall have a density greater than 1.0 as related to water at 4.0 degrees C (39.2 degrees F), and shall have a surface brinell hardness of not less than 150. The device shall be center bored and through bolted with a 6 mm (1/4 inch) minimum diameter steel shaft having a yield strength of 480 MPa (70,000 psi) or more, with eyes at each end for attaching pulling cables. The eye shall be suitably backed with flange or heavy washer; a pull exerted on the opposite end of the shaft shall produce compression throughout the remote end of the ball, cylinder or circular section. Circular sections shall be spaced so that the distance from the external faces of the front and back sections shall equal or exceed the diameter of the circular section. Failure of the ball, cylinder, or circular section to pass freely through a pipe run, either by being pulled through or by being flushed through with water, shall be cause for rejection of that run. When a deflection device is used for the test in lieu of the ball,

cylinder, or circular sections described, such device shall be approved prior to use. The device shall be sensitive to 1.0 percent of the diameter of the pipe being measured and shall be accurate to 1.0 percent of the indicated dimension. Installed pipe showing deflections greater than 7.5 percent of the normal diameter of the pipe, or 5 percent for RTRP and RPMP, shall be retested by a run from the opposite direction. If the retest also fails, the suspect pipe shall be replaced at no cost to the Government.

3.2 CONCRETE CRADLE AND ENCASEMENT

The pipe shall be supported on a concrete cradle, or encased in concrete where indicated or directed.

3.3 MANHOLE DETAILS

3.3.1 General Requirements

Manholes shall be constructed of precast concrete manhole sections. The invert channels shall be smooth and semicircular in shape conforming to the inside of the adjacent sewer section. Changes in direction of flow shall be made with a smooth curve of as large a radius as the size of the manhole will permit. Changes in size and grade of the channels shall be made gradually and evenly. The invert channels shall be formed directly in the concrete of the manhole base, or shall be built up with brick and mortar, or shall be half tile laid in concrete, or shall be constructed by laying full section sewer pipe through the manhole and breaking out the top half after the surrounding concrete has hardened. Pipe connections shall be made to manhole using water stops, standard O-ring joints, special manhole coupling, or shall be made in accordance with the manufacturer's recommendation. The Contractor's proposed method of connection, list of materials selected, and specials required, shall be approved prior to installation. The floor of the manhole outside the channels shall be smooth and shall slope toward the channels not less than 100 mm per meter nor more than 200 mm per meter. Free drop inside the manholes shall not exceed 500 mm, measured from the invert of the inlet pipe to the top of the floor of the manhole outside the channels; drop manholes shall be constructed whenever the free drop would otherwise be greater than 500 mm.

3.3.2 Steel Ladder Anchorage

Ladder shall be adequately anchored to the wall by means of steel inserts spaced not more than 1850 mm apart vertically, and shall be installed to provide at least 150 mm of space between the wall and the rungs. The wall along the line of the ladder shall be vertical for its entire length.

3.3.3 Jointing, Plastering and Sealing

Mortar joints shall be completely filled and shall be smooth and free from surplus mortar on the inside of the manhole. Mortar and mastic joints between precast rings shall be full-bedded in jointing compound and shall be smoothed to a uniform surface on both the interior and exterior of the manhole. Installation of rubber gasket joints between precast rings shall be in accordance with the recommendations of the manufacturer. Precast rings may also be sealed by the use of extruded rolls of rubber with mastic adhesive on one side.

3.3.4 Setting of Frames and Covers

Unless otherwise indicated, tops of frames and covers shall be set flush with finished grade in paved areas or 50 mm higher than finished grade in unpaved areas. Frame and cover assemblies shall be sealed

to manhole sections using external preformed rubber joint seals that meet the requirements of ASTM D 412 and ASTM D 624, or other methods specified in paragraph Jointing, Plastering and Sealing, unless otherwise specified.

3.3.5 External Preformed Rubber Joint Seals

External preformed rubber joint seals and extruded rolls of rubber with mastic adhesive shall meet the requirements of ASTM D 412 and ASTM C 972 to ensure conformance with paragraph Leakage Tests. The seal shall be multi-section with neoprene rubber top section and all lower sections made of Ethylene Propylene Di Monomer (EPDM) rubber with a minimum thickness of 1.5 mm. Each unit shall consist of a top and a bottom section and shall have mastic on the bottom of the bottom section and mastic on the top and bottom of the top section. The mastic shall be non-hardening butyl rubber sealant and shall seal to the cone/top slab of the manhole/catch basin and over the lip of the casting. One unit shall seal a casting and up to six, 50 mm adjusting rings. The bottom section shall be 305 mm in height. A 152 mm high top section will cover up to two, 50 mm adjusting rings. A 305 mm high bottom section will cover up to six, 50 mm adjusting rings. Extension sections shall cover up to two more adjusting rings. Each extension shall overlap the bottom section by 50 mm and shall be overlapped by the top section by 50 mm.

3.4 CONNECTING TO EXISTING MANHOLES

Pipe connections to existing manholes shall be made so that finish work will conform as nearly as practicable to the applicable requirements specified for new manholes, including all necessary concrete work, cutting, and shaping. The connection shall be centered on the manhole. Holes for the new pipe shall be of sufficient diameter to allow packing cement mortar around the entire periphery of the pipe but no larger than 1.5 times the diameter of the pipe. Cutting the manhole shall be done in a manner that will cause the least damage to the walls.

3.5 BUILDING CONNECTIONS

Building connections shall include the lines to and connection with the building waste drainage piping at a point approximately 1.5 m outside the building, unless otherwise indicated. Where building drain piping is not installed, the Contractor shall terminate the building connections approximately 1.5 m from the site of the building at a point and in a manner designated.

3.6 CLEANOUTS AND OTHER APPURTENANCES

Cleanouts and other appurtenances shall be installed where shown on the drawings or as directed by the Contracting Officer, and shall conform to the detail of the drawings.

END OF SECTION

This page intentionally blank

SECTION 02556

GAS DISTRIBUTION SYSTEM

PART 1 GENERAL

1.1 REFERENCES

The publications listed below form a part of this specification to the extent referenced. The publications are referred to in the text by basic designation only.

AMERICAN SOCIETY OF CIVIL ENGINEERS (ASCE)

ASCE 25-97	(1998) Earthquake Actuated Automatic Gas Shutoff Devices Service dated March 27, 1998

AMERICAN GAS ASSOCIATION (AGA)

AGA Manual	(1994; addenda/correction Jan 1996) A.G.A. Plastic Pipe Manual for Gas Service

AMERICAN NATIONAL STANDARDS INSTITUTE (ANSI)

ANSI B109.2	(1992) Diaphragm Type Gas Displacement Meters (500 Cubic Feet per Hour Capacity and Over)

AMERICAN PETROLEUM INSTITUTE (API)

API Spec 5L	(1995; Errata Dec 1997) Line Pipe
API Spec 6D	(1994; Supple 1 June 1996; Supple 2 Dec, 1997) Pipeline Valves (Gate, Plug, Ball, and Check Valves)

AMERICAN SOCIETY FOR TESTING AND MATERIALS (ASTM)

ASTM A 53	(1997) Pipe, Steel, Black and Hot-Dipped, Zinc-Coated, Welded and Seamless
ASTM A 181/A 181M	(1995b) Carbon Steel Forgings, for General-Purpose Piping
ASTM D 2513	(1996a) Thermoplastic Gas Pressure Pipe, Tubing, and Fittings
ASTM D 2517	(1994) Reinforced Epoxy Resin Gas Pressure Pipe and Fittings
ASTM D 2683	(1995) Socket-Type Polyethylene Fittings for Outside Diameter-Controlled Polyethylene Pipe and Tubing

ASTM D 3261	(1996) Butt Heat Fusion Polyethylene (PE) Plastic Fittings for Polyethylene (PE) Plastic Pipe and Tubing
ASTM D 3308	(1997) PTFE Resin-Skived Tape
ASTM D 3350	(1996) Polyethylene Plastics Pipe and Fittings Materials

AMERICAN SOCIETY OF MECHANICAL ENGINEERS (ASME)

ASME B1.20.1	(1983; R 1992) Pipe Threads, General Purpose (Inch)
ASME B16.5	(1996) Pipe Flanges and Flanged Fittings NPS 1/2 thru NPS 24
ASME B16.9	(1993) Factory-Made Wrought Steel Buttwelding Fittings
ASME B16.11	(1996) Forged Fittings, Socket-Welding and Threaded
ASME B16.21	(1992) Nonmetallic Flat Gaskets for Pipe Flanges
ASME B16.34	(1996) Valves - Flanged, Threaded, and Welding End
ASME B16.40	(1985; R 1994) Manually Operated Thermoplastic Gas Shutoffs and Valves in Gas Distribution Systems
ASME B31.8	(1995) Gas Transmission and Distribution Piping Systems
ASME BPV VIII Div 1	(1998) Boiler and Pressure Vessel Code; Section VIII, Pressure Vessels Division 1 - Basic Coverage

CODE OF FEDERAL REGULATIONS (CFR)

49 CFR 192	Transportation of Natural and Other Gas by Pipeline: Minimum Federal Safety Standards

COMMERCIAL ITEM DESCRIPTION (CID)

CID A-A-2962	(Basic) Enamel, Alkyd (Metric)

FEDERAL SPECIFICATIONS (FS)

FS TT-E-2784	(Rev A) Enamel (Acrylic-Emulsion, Exterior Gloss and Semigloss) (Metric)

MANUFACTURERS STANDARDIZATION SOCIETY OF THE VALVE AND FITTINGS INDUSTRY (MSS)

MSS SP-25	(1998) Standard Marking System for Valves, Fittings, Flanges and Unions

NACE INTERNATIONAL (NACE)

NACE RP0185	(1996) Extruded, Polyolefin Resin Coating Systems with Soft Adhesives for Underground or Submerged Pipe
NACE RP0274	(1993) High Voltage Electrical Inspection of Pipeline Coatings Prior to Installation

STEEL STRUCTURES PAINTING COUNCIL (SSPC)

SSPC Paint 25	(1991) Red Iron Oxide, Zinc Oxide, Raw Linseed Oil and Alkyd Primer (Without Lead and Chromate Pigments)
SSPC SP 1	(1982) Solvent Cleaning
SSPC SP 3	(1995) Power Tool Cleaning
SSPC SP 6	(1994) Commercial Blast Cleaning
SSPC SP 7	(1994) Brush-Off Blast Cleaning

UNDERWRITERS LABORATORIES (UL)

UL Gas&Oil Dir	(1996; Supple) Gas and Oil Equipment Directory

1.2 GENERAL REQUIREMENTS

1.2.1 Welding Steel Piping

Welding and nondestructive testing procedures for pressure piping are specified in Section 05093 WELDING PRESSURE PIPING. Structural members shall be welded in accordance with Section 05090 WELDING, STRUCTURAL.

1.2.2 Jointing Polyethylene and Fiberglass Piping

Piping shall be joined by performance qualified joiners using qualified procedures in accordance with AGA Manual. Manufacturer's prequalified joining procedures shall be used. Joints shall be inspected by an inspector qualified in the joining procedures being used and in accordance with AGA Manual. Joiners and inspectors shall be qualified at the jobsite by a person who has been trained and certified by the manufacturer of the pipe, to train and qualify joiners and inspectors in each joining procedure to be used on the job. Training shall include use of equipment, explanation of the procedure, and successfully making joints which pass tests specified in AGA Manual. The Contracting Officer shall be notified at least 24 hours in advance of the date to qualify joiners and inspectors.

1.2.3 Standard Products

Materials and equipment shall be the standard products of a manufacturer regularly engaged in the manufacture of the products and shall essentially duplicate items that have been in satisfactory use for at least 2 years prior to bid opening. Asbestos or products containing asbestos shall not be used. Equipment shall be supported by a service organization that is, in the opinion of the Contracting Officer, reasonably convenient to the site. Valves, flanges, and fittings shall be marked in accordance with MSS SP-25.

1.2.4 Verification of Dimensions

The Contractor shall become familiar with all details of the work, verify all dimensions in the field, and shall advise the Contracting Officer of any discrepancy before performing the work.

1.2.5 Handling

Pipe and components shall be handled carefully to ensure a sound, undamaged condition. Particular care shall be taken not to damage pipe coating. No pipe or material of any kind shall be placed inside another pipe or fitting after the coating has been applied, except as specified in paragraph INSTALLATION. Plastic pipe shall be handled in conformance with AGA Manual.

1.3 SUBMITTALS

Government approval is required for submittals with a "GA" designation; submittals having an "FIO" designation are for information only. The following shall be submitted in accordance with Section 01330 SUBMITTAL PROCEDURES:

SD-04 Drawings

Pipe, Fittings, and Associated Materials; FIO.

Drawings shall contain complete schematic and piping diagrams and any other details required to demonstrate that the system has been coordinated and will properly function as a unit. Drawings shall show proposed layout and anchorage of the system and appurtenances, and equipment relationship to other parts of the work including clearances for maintenance and operation.

SD-07 Schedules

Equipment and Materials; FIO.

A complete list of equipment and materials, including manufacturer's descriptive and technical literature, performance charts and curves, catalog cuts, and installation instructions, including, but not limited to the following:

a. Dielectric Unions and Flange Kits.

b. Meters.

c. Pressure Reducing Valves.

d. Regulators.

e. Earthquake Actuated Automatic Gas Shutoff System

f. Emergency Gas Supply Connection.

Spare Parts Data; FIO.

Spare parts lists for each different item of material and equipment specified, after approval of the detail drawings and not later than three months prior to the date of beneficial occupancy. The data shall include a complete list of parts and supplies, with current unit prices and source of supply.

Notification; FIO.

Notification of the Contractor's schedule for making connections to existing gas lines, at least 10 days in advance.

SD-08 Statements

Welding Steel Piping; FIO.

A copy of qualified welding procedures along with a list of names and identification symbols of performance qualified welders and welding operators.

Jointing Polyethylene and Fiberglass Piping; GA.

A copy of qualified jointing procedures, training procedures, qualifications of trainer, and training test results for joiners and inspectors.

Connection and Abandonment Procedures; GA.

A copy of procedures for gas line tie in, hot taps, abandonment/removal or demolition, purging, and plugging as applicable in accordance with ASME B31.8.

SD-13 Certificates

Utility Work; FIO.

Certification from the Operating Agency/Utility Company that work for which the Utility is responsible has been completed.

Training; FIO.

A copy of each inspector's and jointer's training certificate with respective test results.

SD-19 Operation and Maintenance Manuals

Gas Distribution System; FIO.

Six copies, in booklet form and indexed, of site specific natural gas operation and maintenance manual for each gas distribution system including system operation, system maintenance, equipment operation, and equipment maintenance manuals described below. If operation and maintenance manuals are provided in a common volume, they shall be clearly differentiated and separately indexed.

The System Operation Manual shall include but not be limited to the following:

a. Maps showing piping layout and locations of all system valves and gas line markers.

b. Step-by-step procedures required for system startup, operation, and shutdown. System components and equipment shall be indexed to the gas maps.

c. Isolation procedures and valve operations to shut down or isolate each section of the system. Valves and other system components shall be indexed to the gas maps.

d. Descriptions of Site Specific Standard Operation Procedures including permanent and temporary pipe repair procedures, system restart and test procedures for placing repaired lines back in service, and procedures for abandoning gas piping and system components.

e. Descriptions of Emergency Procedures including: isolation procedures including required valve operations with valve locations indexed to gas map, recommended emergency equipment, checklist for major emergencies and procedures for connecting emergency gas supply.

The Equipment Operation Manual shall include, but not be limited to, detail drawings, equipment data, and manufacturer supplied operation manuals for all equipment, valves and system components.

The System Maintenance Manuals shall include, but not be limited to:

a. Maintenance check list for entire gas distribution system.

b. Descriptions of site specific standard maintenance procedures.

c. Maintenance procedures for installed cathodic protection systems.

d. Piping layout, equipment layout, and control diagrams of the systems as installed.

e. Identification of pipe materials and manufacturer by location, pipe repair procedures, and jointing procedures at transitions to other piping materials or piping from different manufacturer.

The Equipment Maintenance Manuals shall include but not be limited to the following:

a. Identification of valves and other equipment by materials, manufacturer, vendor identification and location.

b. Maintenance procedures and recommended maintenance tool kits for all valves and equipment.

c. Recommended repair methods, either field repair, factory repair, or whole-item replacement for each valve component or piece of equipment or component item.

d. Routine maintenance procedures, possible breakdowns and repairs, and troubleshooting guide.

PART 2 PRODUCTS

2.1 PIPE, FITTINGS, AND ASSOCIATED MATERIALS

2.1.1 Steel Pipe

Steel pipe shall conform to ASTM A 53, Grade A or B, Type E or S, Schedule 40; or API Spec 5L seamless or electric resistance welded, Schedule 40, black steel pipe as specified in ASME B31.8. Furnace buttwelded pipe may be used in sizes 40 mm and smaller.

2.1.2 Small Fittings

Fittings 40 mm and smaller shall conform to ASME B16.11.

2.1.3 Fittings, 50 mm and Larger

Pipe flanges and flanged fittings including bolts, nuts, and bolt patterns shall be in accordance with ASME B16.5. Buttweld fittings shall be in accordance with ASME B16.9. Weld neck flanges shall be used.

2.1.4 Steel Forged Branch Connections

Connections shall conform to ASTM A 181/A 181M, Class 60, carbon steel.

2.1.5 Flange Gaskets

Gaskets shall be non-asbestos compressed material in accordance with ASME B16.21, 1.6 mm minimum thickness, full face or self-centering flat ring type. The gaskets shall contain aramid fibers bonded with nitrile butadiene rubber (NBR), or glass fibers bonded with polytetrafluoroethylene, suitable for maximum 315 degrees C service and meeting applicable requirements of ASME B31.8.

2.1.6 Pipe Threads

Pipe threads shall conform to ASME B1.20.1.

2.1.7 Polyethylene Pipe, Tubing, Fittings and Joints

Polyethylene pipe, tubing, fittings and joints shall conform to ASTM D 3350 and ASTM D 2513, pipe designations PE 2406 and PE 3408, rated SDR 13.5 or less, as specified in ASME B31.8. Pipe sections shall be marked as required by ASTM D 2513. Butt fittings shall conform to ASTM D 3261 and socket fittings shall conform to ASTM D 2683. Fittings shall match the service rating of the pipe. Minimum wall thickness shall be in accordance with ASME B31.8, table 842.32(c).

2.1.8 Fiberglass Pipe, Fittings and Adhesive

Fiberglass pipe, fittings and adhesive shall conform to ASTM D 2517. Pipe sections shall be marked as required by ASTM D 2517. Minimum wall thickness shall be in accordance with ASME B31.8, table 842.32(c).

2.1.9 Sealants for Steel Pipe Threaded Joints

2.1.9.1 Sealing Compound

Joint sealing compound shall be as listed in UL Gas & Oil Dir, Class 20 or less.

2.1.9.2 Tape

Polytetrafluoroethylene tape shall conform to ASTM D 3308.

2.1.10 Identification

Pipe flow markings and metal tags for each valve, meter, and regulator shall be provided as required by the Contracting Officer.

2.1.11 Insulating Joint Materials

Insulating joint materials shall be provided between flanged or threaded metallic pipe systems where shown to isolate galvanic or electrolytic action.

2.1.11.1 Threaded Joints

Joints for threaded pipe shall be steel body nut type dielectric type unions with insulating gaskets.

2.1.11.2 Flanged Joints

Joints for flanged pipe shall consist of full face sandwich-type flange insulating gasket of the dielectric type, insulating sleeves for flange bolts and insulating washers for flange nuts.

2.1.12 Gas Transition Fittings

Gas transition fittings shall be manufactured steel fittings approved for jointing steel and polyethylene or fiberglass pipe. Approved transition fittings are those that conform to AGA Manual requirements for transition fittings.

2.2 VALVES

Valves shall be suitable for shutoff or isolation service and shall conform to the following:

2.2.1 Steel Valves

Steel valves 40 mm and smaller installed underground shall conform to ASME B16.34, carbon steel, socket weld ends, with square wrench operator adaptor. Steel valves 40 mm and smaller installed

aboveground shall conform to ASME B16.34, carbon steel, socket weld or threaded ends with handwheel or wrench operator. Steel valves 50 mm and larger installed underground shall conform to API Spec 6D, carbon steel, buttweld ends, Class 150 with square wrench operator adaptor. Steel valves 50 mm and larger installed aboveground shall conform to API Spec 6D, carbon steel, buttweld or flanged ends, Class 150 with handwheel or wrench operator.

2.2.2 Steel Valve Operators

Valves 200 mm and larger shall be provided with worm or spur gear operators, totally enclosed, grease packed, and sealed. The operators shall have Open and Closed stops and position indicators. Locking feature shall be provided where indicated. Wherever the lubricant connections are not conveniently accessible, suitable extensions for the application of lubricant shall be provided. Valves shall be provided with lubricant compatible with gas service.

2.2.3 Polyethylene Valves

Polyethylene valves shall conform to ASME B16.40. Polyethylene valves, in sizes 15 mm to 150 mm, may be used with polyethylene distribution and service lines, in lieu of steel valves, for underground installation only.

2.3 PRESSURE REGULATORS

Regulators shall have ferrous bodies, shall provide backflow and vacuum protection, and shall be designed to meet the pressure, load and other service conditions.

2.3.1 Gas Main Regulators

Pressure regulators for main distribution lines, supplied from a source of gas which is at a higher pressure than the maximum allowable operating pressure for the system, and shall be equipped with pressure regulating devices of adequate capacity. In addition to the pressure regulating devices, a suitable method shall be provided to prevent overpressuring of the system in accordance with ASME B31.8. Suitable protective devices are as follows:

a. Spring-loaded relief valve meeting the provisions of ASME BPV VIII Div 1.

b. Pilot-loaded back pressure regulator used as relief valve, so designed that failure of the pilot system will cause the regulator to open.

c. Weight-loaded relief valves.

d. Monitoring regulator installed in series with the primary pressure regulator.

e. Series regulator installed upstream from the primary regulator, set to limit the pressure on the inlet of the primary regulator continuously to the maximum allowable operating pressure of the system, or less.

f. Automatic shutoff device installed in series with the primary regulator, set to shut off when the pressure on the distribution system reaches the maximum allowable operating pressure of the system, or less. This device shall remain closed until manually reset.

g. Spring-loaded, diaphragm type relief valves.

2.3.2 Service Line Regulators

Pressure regulators for individual service lines shall have ferrous bodies. Regulator shall be capable of reducing distribution line pressure to pressures required for users. Regulators shall be provided where gas will be distributed at pressures in excess of 2.5 kPa. Pressure relief shall be set at a lower pressure than would cause unsafe operation of any connected user. Regulators for liquified petroleum gas shall be adjusted to 2.5 to 3 kPa. Pressure relief for liquified petroleum gas shall be set at 4 kPa. Regulator shall have single port with orifice diameter no greater than that recommended by the manufacturer for the maximum gas pressure at the regulator inlet. Regulator valve vent shall be of resilient materials designed to withstand flow conditions when pressed against the valve port. Regulator shall be capable of regulating downstream pressure within limits of accuracy and shall be capable of limiting the buildup of pressure under no-flow conditions to 50 percent or less of the discharge pressure maintained under flow conditions. Regulator shall have a self contained service regulator. Regulator pipe connections shall not exceed 50 mm size.

2.4 METERS

Meters shall conform to ANSI B109.2. Meters shall be pedestal mounted and be provided with a strainer immediately upstream. Meters shall be provided with over-pressure protection as specified in ASME B31.8, tamper-proof protection, frost protection, and fungus-proof protection. Meters shall be suitable for accurately measuring and handling gas at pressures, temperatures, and flow rates indicated. Meters shall have a pulse switch initiator capable of operating up to speeds of 500 pulses per minute with no false pulses and shall require no field adjustments. Initiators shall provide the maximum number of pulses up to 500 per minute that is obtainable from the manufacturer. It shall provide not less than one pulse per 2.83 cubic meter of gas.

2.5 EARTHQUAKE ACTUATED AUTOMATIC GAS SHUTOFF SYSTEM

Earthquake Actuated Automatic Gas Shutoff devices shall conform to ASCE 25-97 and requirements furnished by the Contracting Officer, and shall be listed by the State of California, Division of the State Architect as being tested and in conformance with specified requirements. The system shall safely interrupt the flow of gas to the building due to strong ground shaking of an earthquake.

2.6 EMERGENCY GAS SUPPLY CONNECTION

The emergency gas supply connection shall consist of piping (same size as service line) and accessories that will enable a portable, commercial-sized gas cylinder system to be connected to the gas piping system. This connection shall be capped to prevent gas leakage with a lockable manual valve located to be capable of shutting off flow. The entire assembly should be contained in a weatherproof, lockable box. The box shall contain permanently installed written instructions stating the type and pressure of the gas allowed to be connected to the line. The instructions shall also indicate and provide specific instruction for testing of the integrity of the building's gas system with an inert gas before the fuel gas connection is made. A subplate shall be provided in the box that is required to be unbolted to gain access to the connection. The subplate shall contain a warning regarding the potential consequences of using gas other than that specified or of failing to test system integrity before hooking up emergency fuel supply.

2.7 PROTECTIVE COVERING MATERIALS

Continuously extruded polyethylene and adhesive coating system materials shall conform to NACE RP0185, Type A.

2.8 TELEMETERING OR RECORDING GAUGES

Each distribution system supplied by more than one district pressure regulating station shall be equipped with telemetering or recording pressure gauges to indicate the gas pressure in the district line.

PART 3 EXECUTION

3.1 EXCAVATION AND BACKFILLING

Earthwork shall be as specified in Section 02316 EXCAVATION, TRENCHING, AND BACKFILLING FOR UTILITIES SYSTEMS.

3.2 GAS MAINS

Pipe for gas mains shall be polyethylene. Steel pipe and fittings shall be coated with protective covering as specified. Polyethylene or fiberglass mains shall not be installed aboveground.

3.3 SERVICE LINES AND EMERGENCY GAS SUPPLY CONNECTION

Service lines shall be constructed of materials specified for gas mains and shall extend from a gas main to and including the point of delivery within 1.5 meters of the building. The point of delivery is the gas meter. The service lines shall be connected to the gas main as indicated. Where indicated, service line shall be provided with an isolation valve of the same size as the service line. The service lines shall be as short and as straight as practicable between the point of delivery and the gas main and shall not be bent or curved laterally unless necessary to avoid obstructions or otherwise permitted. Service lines shall be laid with as few joints as practicable using standard lengths of pipe. Shorter lengths shall be used only for closures. Polyethylene or fiberglass service lines shall not be installed aboveground except as permitted in ASME B31.8.

3.3.1 Emergency Gas Supply Connection

An aboveground locked, valved and capped emergency gas supply connection shall be provided downstream of the pressure regulator. The connection shall be located outside of the building within 300 mm of the exterior wall and installed in a weatherproof box which is mounted on the exterior wall and clearly marked with an appropriate metal sign mounted on wall above.

3.4 WORKMANSHIP AND DEFECTS

Pipe, tubing, and fittings shall be clear and free of cutting burrs and defects in structure or threading and shall be thoroughly brushed and blown free of chips and scale. Defective pipe, tubing, or fittings shall be replaced and shall not be repaired.

3.5 PROTECTIVE COVERING

3.5.1 Protective Covering for Underground Steel Pipe

Except as otherwise specified, protective coverings shall be applied mechanically in a factory or field plant especially equipped for the purpose. Valves and fittings that cannot be coated and wrapped mechanically shall have the protective covering applied by hand, preferably at the plant that applies the covering to the pipe. Joints shall be coated and wrapped by hand. Hand coating and wrapping shall be done in a manner and with materials that will produce a covering equal in thickness to that of the covering applied mechanically.

3.5.1.1 Thermoplastic Resin Coating System

The coating system shall conform to NACE RP0185, Type A. The exterior of the pipe shall be cleaned to a commercial grade blast cleaning finish in accordance with SSPC SP 6. Adhesive compound shall be applied to the pipe. Immediately after the adhesive is applied, a seamless tube of polyethylene shall be extruded over the adhesive to produce a bonded seamless coating. The nominal thickness of the pipe coating system shall be 0.25 mm (plus or minus 10 percent) of adhesive and 1.0 mm (plus or minus 10 percent) of polyethylene for pipes up to 400 mm in diameter. For pipes 450 mm and larger in diameter, the pipe coating system thickness shall be 0.25 mm (plus or minus 10 percent) adhesive and 1.5 mm (plus or minus 10 percent) polyethylene. Joint coating and field repair material shall be applied as recommended by the coating manufacturer and shall be one of the following:

a. Heat shrinkable polyethylene sleeves.

b. Polyvinyl chloride pressure-sensitive adhesive tape.

c. High density polyethylene/bituminous rubber compound tape.

The coating system shall be inspected for holes, voids, cracks, and other damage during installation.

3.5.1.2 Inspection of Pipe Coatings

Any damage to the protective covering during transit and handling shall be repaired before installation. After field coating and wrapping has been applied, the entire pipe shall be inspected by an electric holiday detector with impressed current set at a value in accordance with NACE RP0274 using a full-ring, spring-type coil electrode. The holiday detector shall be equipped with a bell, buzzer, or other type of audible signal which sounds when a holiday is detected. All holidays in the protective covering shall be repaired immediately upon detection. The Contracting Officer reserves the right to inspect and determine the suitability of the detector. Labor, materials, and equipment necessary for conducting the inspection shall be furnished by the Contractor.

3.5.2 Protective Covering for Aboveground Piping Systems

Finish painting shall conform to the applicable paragraphs of Section 09900 PAINTING, GENERAL and as follows:

3.5.2.1 Ferrous Surfaces

Shop primed surfaces shall be touched up with ferrous metal primer same type paint as the shop primer. Surfaces that have not been shop primed shall be solvent-cleaned in accordance with SSPC SP 1. Surfaces that contain loose rust, loose mill scale, and other foreign substances shall be mechanically cleaned by power wire brushing in accordance with SSPC SP 3 or brush-off blast cleaned in accordance with SSPC SP 7 and primed with ferrous metal primer in accordance with SSPC Paint 25. Primed surfaces shall be finished with two coats of exterior alkyd paint conforming to **CID A-A-2962**.

3.5.2.2 Nonferrous Surfaces

Nonferrous surfaces shall not be painted.

3.5.3 Protective Covering for Piping in Valve Boxes and Manholes

Piping in valve boxes or manholes shall receive protective coating as specified for underground steel pipe.

3.6 INSTALLATION

Gas distribution system and equipment shall be installed in conformance with the manufacturer's recommendations and applicable sections of ASME B31.8, AGA Manual and 49 CFR 192. Abandoning existing gas piping shall be done in accordance with ASME B31.8. Pipe shall be cut without damaging the pipe. Unless otherwise authorized, cutting shall be done by an approved type of mechanical cutter. Wheel cutters shall be used where practicable. On steel pipe 150 mm and larger, an approved gas-cutting-and-beveling machine may be used. Cutting of plastic pipe shall be in accordance with AGA Manual. Valve installation in plastic pipe shall be designed to protect the plastic pipe against excessive torsional or shearing loads when the valve is operated and from other stresses which may be exerted through the valve or valve box.

3.6.1 Installing Pipe Underground

Gas mains and service lines shall be graded as indicated. Joints in steel pipe shall be welded except as otherwise permitted for installation of valves. Mains shall have 600 mm minimum cover; service lines shall have 485 mm minimum cover; and both mains and service lines shall be placed on firmly compacted select material for the full length. Where indicated, the main shall be encased, bridged, or designed to withstand any anticipated external loads as specified in ASME B31.8. The encasement material shall be standard weight black steel pipe with a protective coating as specified. The pipe shall be separated from the casing by insulating spacers and sealed at the ends with casing bushings. Trench shall be excavated below pipe grade, bedded with bank sand, and compacted to provide full-length bearing. Laying the pipe on blocks to produce uniform grade will not be permitted. The pipe shall be clean inside before it is lowered into the trench and shall be kept free of water, soil, and all other foreign matter that might damage or obstruct the operation of the valves, regulators, meters, or other equipment. When work is not in progress, open ends of pipe or fittings shall be securely closed by expandable plugs or other suitable means. Minor changes in line or gradient of pipe that can be accomplished through the natural flexibility of the pipe material without producing permanent deformation and without overstressing joints may be made when approved. Changes in line or gradient that exceed the limitations specified shall be made with fittings. When cathodic protection is furnished, electrically insulated joints or flanges shall be provided. When polyethylene or fiberglass piping is installed underground, foil

backed magnetic tape shall be placed above the pipe to permit locating with a magnetic detector. After laying of pipe and testing, trench shall be backfilled in accordance with Section 02316 EXCAVATION, TRENCHING, AND BACKFILLING FOR UTILITY SYSTEMS.

3.6.2 Installing Pipe Aboveground

Aboveground piping shall be protected against dirt and other foreign matter as specified for underground piping. Joints in steel pipe shall be welded; however, joints in pipe 40 mm in diameter and smaller may be threaded; joints may also be threaded to accommodate the installation of valves. Flanges shall be of the weld neck type to match wall thickness of pipe.

3.7 PIPE JOINTS

Pipe joints shall be designed and installed to effectively sustain the longitudinal pullout forces caused by the contraction of piping or superimposed loads.

3.7.1 Threaded Steel Joints

Threaded joints in steel pipe shall have tapered threads evenly cut and shall be made with UL approved graphite joint sealing compound for gas service or polytetrafluoroethylene tape applied to the male threads only. Caulking of threaded joints to stop or prevent leaks will not be permitted.

3.7.2 Welded Steel Joints

Gas pipe weldments shall be as indicated. Changes in direction of piping shall be made with welding fittings only; mitering or notching pipe to form elbows and tees or other similar type construction will not be permitted. Branch connection may be made with either welding tees or forged branch outlet fittings. Branch outlet fittings shall be forged, flared for improvement of flow where attached to the run, and reinforced against external strains. Beveling, alignment, heat treatment, and inspection of weld shall conform to ASME B31.8. Weld defects shall be removed and repairs made to the weld, or the weld joints shall be entirely removed and rewelded. After filler metal has been removed from its original package, it shall be protected or stored so that its characteristics or welding properties are not affected adversely. Electrodes that have been wetted or have lost any of their coating shall not be used.

3.7.3 Polyethylene and Fiberglass Pipe Jointing Procedures

Jointing procedures shall conform to AGA Manual. Indiscriminate heat fusion joining of plastic pipe or fittings made from different polyethylene resins by classification or by manufacturer shall be avoided if other alternative joining procedures are available. If heat fusion joining of dissimilar polyethylenes is required, special procedures are required. The method of heat fusion joining dissimilar polyethylene resins shall be tested in accordance with paragraph TESTS, subparagraph Destructive Tests of Plastic Pipe Joints.

3.7.4 Connections Between Metallic and Plastic Piping

Connections shall be made only outside, underground, and with approved transition fittings.

3.8 VALVE BOXES

Valve boxes of cast iron not less than 4.7 mm thick shall be installed at each underground valve except where concrete or other type of housing is indicated. Valve boxes shall be provided with locking covers that require a special wrench for removal. Wrench shall be furnished for each box. The word "gas" shall be cast in the box cover. When the valve is located in a roadway, the valve box shall be protected by a suitable concrete slab at least 1 square meter. When in a sidewalk, the top of the box shall be in a concrete slab 600 mm square and set flush with the sidewalk. Boxes shall be adjustable extension type with screw or slide-type adjustments. Valve boxes shall be separately supported, not resting on the pipe, so that no traffic loads can be transmitted to the pipe. Valves shall only be located in valve boxes or inside of buildings.

3.9 DRIPS

Drips shall be installed at locations where indicated. Drips shall conform to the details shown or may be commercial units of approved type and capacity. A blow off pipe 32 mm (1-1/4 inches) or larger shall be connected to each drip at its lowest point and shall extend to or near the ground surface at a convenient location away from traffic. Discharge for each drip terminal (outlet) shall be provided with a reducing fitting, a plug valve, and a 15 mm (1/2 inch) nipple turned down. The discharge terminal (outlet) shall be inside a length of 300 mm or larger vitrified clay pipe, concrete sewer pipe or concrete terminal box and closed at the ground surface with a suitable cover.

3.10 PRESSURE REGULATOR INSTALLATION

3.10.1 Not used

3.10.2 Service Line Regulators

A shutoff valve, meter set assembly, and service regulator shall be installed on the service line outside the building, 450 mm above the ground on the riser. An insulating joint shall be installed on the inlet side of the meter set assembly and service regulator and shall be constructed to prevent flow of electrical current. A 10 mm tapped fitting equipped with a plug shall be provided on both sides of the service regulator for installation of pressure gauges for adjusting the regulator. All service regulator vents and relief vents shall terminate in the outside air in rain and insect resistant fittings. The open end of the vent shall be located where gas can escape freely into the atmosphere, away from any openings into the building and above areas subject to flooding.

3.11 METER INSTALLATION

Meters shall be installed in accordance with ASME B31.8. Permanent gas meters shall be installed with provisions for isolation and removal for calibration and maintenance, and shall be suitable for operation in conjunction with an energy monitoring and control system.

3.12 CONNECTIONS TO EXISTING LINES

Connections between new work and existing gas lines, where required, shall be made in accordance with ASME B31.8, using proper fittings to suit the actual conditions. When connections are made by tapping into a gas main, the connecting fittings shall be the same size as the pipe being connected.

3.12.1 Connections to Publicly or Privately Operated Gas Utility Lines

Contractor shall provide materials for the connections to the existing gas lines. Final connections and the turning on of gas shall be made by the utility. Existing lines that are to be a abandoned or taken out of service shall be disconnected, purged and capped, plugged or otherwise effectively sealed by the Utility. The Contractor shall notify the Contracting Officer, in writing, 10 days before final connections and turning on of gas lines. The Contractor shall make necessary arrangements with the Utility for tie in and activation of new gas lines. Only the Operating Agency/Utility Company may reactivate the system after tie in. The Contractor shall furnish a certification by the Operating Agency/Utility Company that all Utility work has been satisfactorily completed.

3.12.2 Connection to Government Owned/Operated Gas Lines

The Contractor shall provide connections to the existing gas lines in accordance with approved procedures. Deactivation of any portion of the existing system shall only be done at the valve location shown on the drawings. Reactivation of any existing gas lines will only be done by the Government. The Contractor's Connection and Abandonment Plan shall be submitted and approved prior to making any connections to existing gas lines. This plan shall include the Operating Agency's required procedures which may be obtained from the Base Operations & Maintenance Supervisor. The Contractor shall notify the Contracting Officer, in writing, 10 days before connections to existing lines are to be made.

a. If facilities are abandoned in place, they shall be physically disconnected from the piping system. The open ends of all abandoned facilities shall be purged, capped, plugged or otherwise effectively sealed. Abandonment shall not be completed until it has been determined that the volume of gas or liquid hydrocarbons contained within the abandoned section poses no potential hazard. Air or inert gas may be used for purging, or the facility may be filled with water or other inert material. If air is used for purging, the Contractor shall ensure that a combustible mixture is not present after purging.

b. When a main is abandoned, together with the service lines connected to it, only the customer's end of such service lines is required to be sealed as stipulated above.

c. Service lines abandoned from the active mains shall be disconnected as close to the main as practicable.

d. All valves left in the abandoned segment shall be closed.

e. All abovegrade valves, risers, and vault and valve box covers shall be removed. Vault and valve box voids shall be filled with suitable compacted backfill material.

3.13 CATHODIC PROTECTION

Cathodic protection shall be provided for all metallic gas piping installed underground and shall be installed as specified in Section 13110 CATHODIC PROTECTION SYSTEM (SACRIFICIAL ANODE).

3.14 TESTS

3.14.1 Destructive Tests of Plastic Pipe Joints

Each day, prior to making polyethylene heat fusion joints or fiberglass adhesive joints, a joint of each size and type to be installed that day shall be made by each person performing joining of plastic pipe that day and destructively tested. At least 3 longitudinal straps shall be cut from each joint. Each strap shall be visually examined, shall not contain voids or discontinuities on the cut surfaces of the joint area, and shall be deformed by bending, torque, or impact, and if failure occurs, it must not initiate in the joint area. If a joint fails the visual or deformation test, the qualified joiner who made that joint shall not make further field joints in plastic pipe on this job until that person has been retrained and requalified. The results of the destructive tests shall be recorded to include the date and time of the tests, size and type of the joints, ambient conditions, fusion iron temperature and names of inspectors and joiners.

3.14.2 Pressure and Leak Tests

The system of gas mains and service lines shall be tested after construction and before being placed in service using air as the test medium. The normal operating pressure for the system is **380 kPa**. The test pressure is **570 kPa**. Prior to testing the system, the interior shall be blown out, cleaned and cleared of all foreign materials. All meters, regulators, and controls shall be removed before blowing out and cleaning and reinstalled after clearing of all foreign materials. Testing of gas mains and service lines shall be done with due regard for the safety of employees and the public during the test. Persons not working on the test operations shall be kept out of the testing area while testing is proceeding. The test shall be made on the system as a whole or on sections that can be isolated. Joints in sections shall be tested prior to backfilling when trenches must be backfilled before the completion of other pipeline sections. The test shall continue for at least 24 hours from the time of the initial readings to the final readings of pressure and temperature. The initial test readings of the instrument shall not be made for at least 1 hour after the pipe has been subjected to the full test pressure, and neither the initial nor final readings shall be made at times of rapid changes in atmospheric conditions. The temperatures shall be representative of the actual trench conditions. There shall be no indication of reduction of pressure during the test after corrections have been made for changes in atmospheric conditions in conformity with the relationship $T(1)P(2)=T(2)P(1)$, in which T and P denote absolute temperature and pressure, respectively, and the numbers denote initial and final readings. During the test, the entire system shall be completely isolated from all compressors and other sources of air pressure. Each joint shall be tested by means of soap and water or an equivalent nonflammable solution prior to backfilling or concealing any work. The testing instruments shall be approved by the Contracting Officer. All labor, materials and equipment for conducting the tests shall be furnished by the Contractor and shall be subject to inspection at all times during the tests. The Contractor shall maintain safety precautions for air pressure testing at all times during the tests.

END OF SECTION

This page intentionally blank

SECTION 02630

STORM-DRAINAGE SYSTEM

PART 1 GENERAL

1.1 REFERENCES

The publications listed below form a part of this specification to the extent referenced. The publications are referred to in the text by basic designation only.

ACI INTERNATIONAL (ACI)

AMERICAN ASSOCIATION OF STATE HIGHWAY AND TRANSPORTATION OFFICIALS (AASHTO)

AASHTO HB-16	(1996) Standard Specifications for Highway Bridges
AASHTO M 190	(1988) Bituminous Coated Corrugated Metal Culvert Pipe and Pipe Arches
AASHTO M 198	(1994) Joints for Circular Concrete Sewer and Culvert Pipe Using Flexible Watertight Gaskets
AASHTO M 294	(1994) Corrugated Polyethylene Pipe, 305- to 915- mm (12-to 36 in.) Diameter

AMERICAN SOCIETY FOR TESTING AND MATERIALS (ASTM)

ASTM A 48	(1994a) Gray Iron Castings
ASTM A 123/A 123M	(1997a) Zinc (Hot-Dip Galvanized) Coatings on Iron and Steel Products
ASTM B 26/B 26M	(1997) Aluminum-Alloy Sand Castings
ASTM C 231	(1997) Air Content of Freshly Mixed Concrete by the Pressure Method
ASTM C 270	(1997a) Mortar for Unit Masonry
ASTM C 443	(1994) Joints for Circular Concrete Sewer and Culvert Pipe, Using Rubber Gaskets

ASTM C 478M	(1997) Precast Reinforced Concrete Manhole Sections (Metric)
ASTM C 655	(1995a) Reinforced Concrete D-Load Culvert, Storm Drain, and Sewer Pipe
ASTM C 924	(1989; R 1997) Concrete Pipe Sewer Lines by Low-Pressure Air Test Method
ASTM C 1103M	(1994) Joint Acceptance Testing of Installed Precast Concrete Pipe Sewer Lines (Metric)
ASTM D 1056	(1991) Flexible Cellular Materials - Sponge or Expanded Rubber
ASTM D 1171	(1994) Rubber Deterioration - Surface Ozone Cracking Outdoors or Chamber (Triangular Specimens)
ASTM D 1557	(1991) Laboratory Compaction Characteristics of Soil Using Modified Effort (2,700 kN-m/cu.m.)
ASTM D 1751	(1983; R 1991) Preformed Expansion Joint Filler for Concrete Paving and Structural Construction (Nonextruding and Resilient Bituminous Types)
ASTM D 1752	(1984; R 1996) Preformed Sponge Rubber and Cork Expansion Joint Fillers for Concrete Paving and Structural Construction
ASTM D 1784	(1997) Rigid Poly(Vinyl Chloride) (PVC) Compounds and Chlorinated Poly(Vinyl Chloride) (CPVC) Compounds
ASTM D 2167	(1994) Density and Unit Weight of Soil in Place by the Rubber Balloon Method
ASTM D 2321	(1989; R 1995) Underground Installation of Thermoplastic Pipe for Sewers and Other Gravity-Flow Applications
ASTM D 3034	(1994) Type PSM Poly(Vinyl Chloride) (PVC) Sewer Pipe and Fittings
ASTM D 3212	(1996a) Joints for Drain and Sewer Plastic Pipes Using Flexible Elastomeric Seals
ASTM D 3350	(1996) Polyethylene Plastics Pipe and Fittings Materials
ASTM F 477	(1995) Elastomeric Seals (Gaskets) for Joining Plastic Pipe
ASTM F 714	(1994) Polyethylene (PE) Plastic Pipe (SDR-PR) Based on Outside Diameter

ASTM F 794	(1995a) Poly(Vinyl Chloride) (PVC) Profile Gravity Sewer Pipe and Fittings Based on Controlled Inside Diameter
ASTM F 949	(1994) Poly(Vinyl Chloride) (PVC) Corrugated Sewer Pipe with a Smooth Interior and Fittings
ASTM F 1417	(1992) Installation Acceptance of Plastic Gravity Sewer Lines Using Low-Pressure Air

1.2 SUBMITTALS

Government approval is required for submittals with a "GA" designation; submittals having an "FIO" designation are for information only. The following shall be submitted in accordance with SECTION 01330 SUBMITTAL PROCEDURES:

SD-06 Instructions

Placing Pipe; FIO.

Printed copies of the manufacturer's recommendations for installation procedures of the material being placed, prior to installation.

SD-13 Certificates

Resin Certification; FIO. Pipeline Testing; FIO. Hydrostatic Test on Watertight Joints; FIO. Determination of Density; FIO. Frame and Cover for Gratings; FIO.

Certified copies of test reports demonstrating conformance to applicable pipe specifications, before pipe is installed. Certification on the ability of frame and cover or gratings to carry the imposed live load.

1.3 DELIVERY, STORAGE, AND HANDLING

1.3.1 Delivery and Storage

Materials delivered to site shall be inspected for damage, unloaded, and stored with a minimum of handling. Materials shall not be stored directly on the ground. The inside of pipes and fittings shall be kept free of dirt and debris. Before, during, and after installation, plastic pipe and fittings shall be protected from any environment that would result in damage or deterioration to the material. The Contractor shall have a copy of the manufacturer's instructions available at the construction site at all times and shall follow these instructions unless directed otherwise by the Contracting Officer. Solvents, solvent compounds, lubricants, elastomeric gaskets, and any similar materials required to install plastic pipe shall be stored in accordance with the manufacturer's recommendations and shall be discarded if the storage period exceeds the recommended shelf life. Solvents in use shall be discarded when the recommended pot life is exceeded.

1.3.2 Handling

Materials shall be handled in a manner that ensures delivery to the trench in sound, undamaged condition. Pipe shall be carried to the trench, not dragged.

PART 2 PRODUCTS

2.1 PIPE FOR CULVERTS AND STORM DRAINS

Pipe for culverts and storm drains shall be of the sizes indicated and shall conform to the requirements specified.

2.1.1 Concrete Pipe

ASTM C 76M , Class II.

2.1.2 PVC Pipe

The pipe manufacturer's resin certification, indicating the cell classification of PVC used to manufacture the pipe, shall be submitted prior to installation of the pipe.

2.1.2.1 Type PSM PVC Pipe

ASTM D 3034, Type PSM, maximum SDR 35, produced from PVC certified by the compounder as meeting the requirements of ASTM D 1784, minimum cell class 12454-B.

2.1.2.2 Profile PVC Pipe

ASTM F 794, Series 46, produced from PVC certified by the compounder as meeting the requirements of ASTM D 1784, minimum cell class 12454-B.

2.1.2.3 Smooth Wall PVC Pipe

ASTM F 679 produced from PVC certified by the compounder as meeting the requirements of ASTM D 1784, minimum cell class 12454-B.

2.1.2.4 Corrugated PVC Pipe

ASTM F 949 produced from PVC certified by the compounder as meeting the requirements of ASTM D 1784, minimum cell class 12454-B.

2.1.3 PE Pipe

The pipe manufacturer's resin certification indicating the cell classification of PE used to manufacture the pipe shall be submitted prior to installation of the pipe. The minimum cell classification for polyethylene plastic shall apply to each of the seven primary properties of the cell classification limits in accordance with ASTM D 3350.

2.1.3.1 Smooth Wall PE Pipe

ASTM F 714, maximum DR of 21 for pipes 80 to 600 mm in diameter and maximum DR of 26 for pipes 650 to 1200 mm in diameter. Pipe shall be produced from PE certified by the resin producer as meeting the requirements of ASTM D 3350, minimum cell class 335434C.

2.1.3.2 Profile Wall PE Pipe

ASTM F 894, RSC 160, produced from PE certified by the resin producer as meeting the requirements of ASTM D 3350, minimum cell class 334433C. Pipe walls shall have the following properties:

		Minimum Moment Of Inertia of Wall Section (mm to the 4th/mm)	
Nominal Size (mm)	Minimum Wall Area (square mm/m)	Cell Class 334433C	Cell Class 335434C
450	6300	850	620
525	8800	1150	840
600	9900	1330	970
675	12500	2050	1490
750	12500	2050	1490
825	14800	2640	2160
900	17100	3310	2700
1050	16500	4540	3720
1200	18700	5540	4540

2.2 MISCELLANEOUS MATERIALS

2.2.1 Concrete

Unless otherwise specified, concrete and reinforced concrete shall conform to the requirements for 27.5 MPa concrete under SECTION 03300 CAST-IN-PLACE STRUCTURAL CONCRETE. The concrete mixture shall have air content by volume of concrete, based on measurements made immediately after discharge from the mixer, of 5 to 7 percent when maximum size of coarse aggregate exceeds 37.5 mm. Air content shall be determined in accordance with ASTM C 231. The concrete covering over steel reinforcing shall not be less than 25 mm thick for covers and not less than 40 mm thick for walls and flooring. Concrete covering deposited directly against the ground shall have a thickness of at least 75 mm between steel and ground. Expansion-joint filler material shall conform to ASTM D 1751, or ASTM D 1752, or shall be resin-impregnated fiberboard conforming to the physical requirements of ASTM D 1752.

2.2.2 Mortar

Mortar for pipe joints, and connections to other drainage structures, shall conform to ASTM C 270, Type M, except that the maximum placement time shall be 1 hour. The quantity of water in the mixture

shall be sufficient to produce a stiff workable mortar but in no case shall exceed 25 liters of water per sack of cement. Water shall be clean and free of harmful acids, alkalies, and organic impurities. The mortar shall be used within 30 minutes after the ingredients are mixed with water. The inside of the joint shall be wiped clean and finished smooth. The mortar head on the outside shall be protected from air and sun with a proper covering until satisfactorily cured.

2.2.3 Precast Reinforced Concrete Manholes

Precast reinforced concrete manholes shall conform to ASTM C 478M . Joints between precast concrete risers and tops shall be made with flexible watertight, rubber-type gaskets meeting the requirements of paragraph JOINTS.

2.2.4 Frame and Cover for Gratings

Frame and cover for gratings shall be cast gray iron, ASTM A 48, Class 35B; cast ductile iron, ASTM A 536, Grade 65-45-12; or cast aluminum, ASTM B 26/B 26M, Alloy 356.OT6. Weight, shape, size, and waterway openings for grates and curb inlets shall be as indicated on the plans.

2.2.5 Joints

2.2.5.1 Flexible Watertight Joints

a. Materials: Flexible watertight joints shall be made with plastic or rubber-type gaskets for concrete pipe. The design of joints and the physical requirements for plastic gaskets shall conform to AASHTO M 198, and rubber-type gaskets shall conform to ASTM C 443. Factory-fabricated resilient joint materials shall conform to ASTM C 425. Gaskets shall have not more than one factory-fabricated splice.

b. Test Requirements: Watertight joints shall be tested and shall meet test requirements of paragraph HYDROSTATIC TEST ON WATERTIGHT JOINTS. Rubber gaskets shall comply with the oil resistant gasket requirements of ASTM C 443. Certified copies of test results shall be delivered to the Contracting Officer before gaskets or jointing materials are installed. Alternate types of watertight joint may be furnished, if specifically approved.

2.2.5.2 External Sealing Bands

Requirements for external sealing bands shall conform to ASTM C 877.

2.2.5.3 Flexible Watertight, Gasketed Joints

a. Gaskets: When infiltration or exfiltration is a concern for pipe lines, the couplings may be required to have gaskets. The closed-cell expanded rubber gaskets shall be a continuous band approximately 178 mm wide and approximately 10 mm thick, meeting the requirements of ASTM D 1056, Type 2 B3, and shall have a quality retention rating of not less than 70 percent when tested for weather resistance by ozone chamber exposure, Method B of ASTM D 1171. Rubber O-ring gaskets shall be 21 mm in diameter for pipe diameters of 914 mm or smaller. Rubber O-ring gaskets shall be 35 mm in diameter for pipe having 25 mm deep end corrugations. O-rings shall meet the requirements of AASHTO M 198 or ASTM C 443. Flexible plastic gaskets shall conform to requirements of AASHTO M 198, Type B.

b. Connecting Bands: Connecting bands shall be of the type, size and sheet thickness of band, and the size of angles, bolts, rods and lugs as indicated or where not indicated as specified in the applicable standards or specifications for the pipe. Exterior rivet heads in the longitudinal seam under the connecting band shall be countersunk or the rivets shall be omitted and the seam welded. Watertight joints shall be tested and shall meet the test requirements of paragraph HYDROSTATIC TEST ON WATERTIGHT JOINTS.

2.2.5.4 PVC Plastic Pipes

Joints shall be solvent cement or elastomeric gasket type in accordance with the specification for the pipe and as recommended by the pipe manufacturer.

2.2.5.5 Smooth Wall PE Plastic Pipe

Pipe shall be joined using butt fusion method as recommended by the pipe manufacturer.

2.2.5.6 Profile Wall PE Plastic Pipe

Joints shall be gasketed or thermal weld type with integral bell in accordance with ASTM F 894.

2.3 STEEL LADDER

Steel ladder shall be provided where the depth of the manhole exceeds 3.66 m (12 feet). These ladders shall be not less than 406 mm (16 inches) in width, with 19 mm (3/4 inch) diameter rungs spaced 305 mm (12 inches) apart. The two stringers shall be a minimum 10 mm (3/8 inch) thick and 63 mm (2-1/2 inches) wide. Ladders and inserts shall be galvanized after fabrication in conformance with ASTM A 123/A 123M.

2.4 DOWNSPOUT BOOTS

Boots used to connect exterior downspouts to the storm-drainage system shall be of gray cast iron conforming to ASTM A 48, Class 30B or 35B. Shape and size shall be as indicated.

2.5 HYDROSTATIC TEST ON WATERTIGHT JOINTS

2.5.1 Concrete, PVC and PE Pipe

A hydrostatic test shall be made on the watertight joint types as proposed. Only one sample joint of each type needs testing; however, if the sample joint fails because of faulty design or workmanship, an additional sample joint may be tested. During the test period, gaskets or other jointing material shall be protected from extreme temperatures which might adversely affect the performance of such materials. Performance requirements for joints in reinforced and nonreinforced concrete pipe shall conform to AASHTO M 198 or ASTM C 443. Test requirements for joints in PVC and PE plastic pipe shall conform to ASTM D 3212.

PART 3 EXECUTION

3.1 EXCAVATION FOR PIPE CULVERTS, STORM DRAINS, AND DRAINAGE STRUCTURES

Excavation of trenches, and for appurtenances and backfilling for culverts and storm drains, shall be in accordance with the applicable portions of SECTION 02316 EXCAVATION, TRENCHING, AND BACKFILLING FOR UTILITIES SYSTEMS and the requirements specified below.

3.1.1 Trenching

The width of trenches at any point below the top of the pipe shall be not greater than the outside diameter of the pipe plus 600 mm to permit satisfactory jointing and thorough tamping of the bedding material under and around the pipe. Sheeting and bracing, where required, shall be placed within the trench width as specified. Contractor shall not overexcavate. Where trench widths are exceeded, redesign with a resultant increase in cost of stronger pipe or special installation procedures will be necessary. Cost of this redesign and increased cost of pipe or installation shall be borne by the Contractor without additional cost to the Government.

3.1.2 Removal of Unstable Material

Where wet or otherwise unstable soil incapable of properly supporting the pipe, as determined by the Contracting Officer, is unexpectedly encountered in the bottom of a trench, such material shall be removed to the depth required and replaced to the proper grade with select granular material, compacted as provided in paragraph BACKFILLING. When removal of unstable material is due to the fault or neglect of the Contractor in his performance of shoring and sheeting, water removal, or other specified requirements, such removal and replacement shall be performed at no additional cost to the government.

3.2 BEDDING

The bedding surface for the pipe shall provide a firm foundation of uniform density throughout the entire length of the pipe.

3.2.1 Concrete Pipe Requirements

When no bedding class is specified or detailed on the drawings, concrete pipe shall be bedded in a soil foundation accurately shaped and rounded to conform to the lowest one-fourth of the outside portion of circular pipe or to the lower curved portion of pipe arch for the entire length of the pipe or pipe arch. When necessary, the bedding shall be tamped. Bell holes and depressions for joints shall be not more than the length, depth, and width required for properly making the particular type of joint.

3.2.2 Plastic Pipe

Bedding for PVC and PE pipe shall meet the requirements of ASTM D 2321. Bedding, haunching, and initial backfill shall be either Class IB or II material.

3.3 PLACING PIPE

Each pipe shall be thoroughly examined before being laid; defective or damaged pipe shall not be used. Plastic pipe shall be protected from exposure to direct sunlight prior to laying, if necessary to maintain

adequate pipe stiffness and meet installation deflection requirements. Pipelines shall be laid to the grades and alignment indicated. Proper facilities shall be provided for lowering sections of pipe into trenches. Lifting lugs in vertically elongated metal pipe shall be placed in the same vertical plane as the major axis of the pipe. Pipe shall not be laid in water, and pipe shall not be laid when trench conditions or weather are unsuitable for such work. Diversion of drainage or dewatering of trenches during construction shall be provided as necessary. Deflection of installed flexible pipe shall not exceed the following limits:

TYPE OF PIPE	MAXIMUM ALLOWABLE DEFLECTION (%)
Plastic	7.5

Not less than 30 days after the completion of backfilling, the Government may perform a deflection test on the entire length of installed flexible pipe using a mandrel or other suitable device. Installed flexible pipe showing deflections greater than those indicated above shall be retested by a run from the opposite direction. If the retest also fails, the suspect pipe shall be replaced at no cost to the Government.

Concrete, PVC, and Ribbed PVC

Laying shall proceed upgrade with spigot ends of bell-and-spigot pipe and tongue ends of tongue-and-groove pipe pointing in the direction of the flow.

3.4 JOINTING

3.4.1 Concrete Pipe

Flexible Watertight Joints

Gaskets and jointing materials shall be as recommended by the particular manufacturer in regard to use of lubricants, cements, adhesives, and other special installation requirements. Surfaces to receive lubricants, cements, or adhesives shall be clean and dry. Gaskets and jointing materials shall be affixed to the pipe not more than 24 hours prior to the installation of the pipe, and shall be protected from the sun, blowing dust, and other deleterious agents at all times. Gaskets and jointing materials shall be inspected before installing the pipe; any loose or improperly affixed gaskets and jointing materials shall be removed and replaced. The pipe shall be aligned with the previously installed pipe, and the joint pushed home. If, while the joint is being made the gasket becomes visibly dislocated the pipe shall be removed and the joint remade.

3.5 DRAINAGE STRUCTURES

3.5.1 Manholes and Inlets

Construction shall be of reinforced concrete, or precast reinforced concrete; complete with frames and covers or gratings; and with fixed galvanized steel ladders where indicated.

3.5.2 Walls and Headwalls

Construction shall be as indicated.

3.6 STEEL LADDER INSTALLATION

Ladder shall be adequately anchored to the wall by means of steel inserts spaced not more than 1.83 m vertically, and shall be installed to provide at least 152 mm of space between the wall and the rungs. The wall along the line of the ladder shall be vertical for its entire length.

3.7 BACKFILLING

3.7.1 Backfilling Pipe in Trenches

After the pipe has been properly bedded, selected material from excavation or borrow, at a moisture content that will facilitate compaction, shall be placed along both sides of pipe in layers not exceeding 150 mm in compacted depth. The backfill shall be brought up evenly on both sides of pipe for the full length of pipe. The fill shall be thoroughly compacted under the haunches of the pipe. Each layer shall be thoroughly compacted with mechanical tampers or rammers. This method of filling and compacting shall continue until the fill has reached an elevation of at least 300 mm above the top of the pipe. The remainder of the trench shall be backfilled and compacted by spreading and rolling or compacted by mechanical rammers or tampers in layers not exceeding 200 millimeters. Tests for density shall be made as necessary to ensure conformance to the compaction requirements specified below. Where it is necessary, in the opinion of the Contracting Officer, that sheeting or portions of bracing used be left in place, the contract will be adjusted accordingly. Untreated sheeting shall not be left in place beneath structures or pavements.

3.7.2 Movement of Construction Machinery

When compacting by rolling or operating heavy equipment parallel with the pipe, displacement of or injury to the pipe shall be avoided. Movement of construction machinery over a culvert or storm drain at any stage of construction shall be at the Contractor's risk. Any damaged pipe shall be repaired or replaced.

3.7.3 Compaction

3.7.3.1 General Requirements

Cohesionless materials include gravels, gravel-sand mixtures, sands, and gravelly sands. Cohesive materials include clayey and silty gravels, gravel-silt mixtures, clayey and silty sands, sand-clay mixtures, clays, silts, and very fine sands. When results of compaction tests for moisture-density relations are recorded on graphs, cohesionless soils will show straight lines or reverse-shaped moisture-density curves, and cohesive soils will show normal moisture-density curves.

3.7.3.2 Minimum Density

Backfill over and around the pipe and backfill around and adjacent to drainage structures shall be compacted at the approved moisture content to the following applicable minimum density, which will be determined as specified below.

a. Under paved roads, streets, parking areas, and similar-use pavements including adjacent shoulder areas, the density shall be not less than 90 percent of maximum density for cohesive

material and 95 percent of maximum density for cohesionless material, up to the elevation where requirements for pavement subgrade materials and compaction shall control.

b. Under unpaved or turfed areas, density shall not be less than 90 percent of maximum density for cohesive material and 95 percent of maximum density for cohesionless material.

3.7.4 Determination of Density

Testing shall be the responsibility of the Contractor and performed at no additional cost to the Government. Testing shall be performed by an approved commercial testing laboratory or by the Contractor subject to approval. Tests shall be performed in sufficient number to ensure that specified density is being obtained. Laboratory tests for moisture-density relations shall be made in accordance with ASTM D 1557 except that mechanical tampers may be used provided the results are correlated with those obtained with the specified hand tamper. Field density tests shall be determined in accordance with ASTM D 2167 or ASTM D 2922. When ASTM D 2922 is used, the calibration curves shall be checked and adjusted, if necessary, using the sand cone method as described in paragraph Calibration of the referenced publications. ASTM D 2922 results in a wet unit weight of soil and when using this method ASTM D 3017 shall be used to determine the moisture content of the soil. The calibration curves furnished with the moisture gauges shall be checked along with density calibration checks as described in ASTM D 3017 or ASTM D 2922. Test results shall be furnished the Contracting Officer. The calibration checks of both the density and moisture gauges shall be made at the beginning of a job on each different type of material encountered and at intervals as directed.

3.8 PIPELINE TESTING

Lines shall be tested for leakage by low pressure air or water testing or exfiltration tests, as appropriate. Low pressure air testing for concrete pipes shall conform to ASTM C 924. Low pressure air testing for plastic pipe shall conform to ASTM F 1417. Low pressure air testing procedures for other pipe materials shall use the pressures and testing times prescribed in ASTM C 828 or ASTM C 924, after consultation with the pipe manufacturer. Testing of individual joints for leakage by low pressure air or water shall conform to ASTM C 1103M . Prior to exfiltration tests, the trench shall be backfilled up to at least the lower half of the pipe. If required, sufficient additional backfill shall be placed to prevent pipe movement during testing, leaving the joints uncovered to permit inspection. Visible leaks encountered shall be corrected regardless of leakage test results. When the water table is 600 mm or more above the top of the pipe at the upper end of the pipeline section to be tested, infiltration shall be measured using a suitable weir or other device acceptable to the Contracting Officer. An exfiltration test shall be made by filling the line to be tested with water so that a head of at least 600 mm is provided above both the water table and the top of the pipe at the upper end of the pipeline to be tested. The filled line shall be allowed to stand until the pipe has reached its maximum absorption, but not less than 4 hours. After absorption, the head shall be reestablished. The amount of water required to maintain this water level during a 2-hour test period shall be measured. Leakage as measured by the exfiltration test shall not exceed 9 mL per mm in diameter per 100 meters of pipeline per hour. When leakage exceeds the maximum amount specified, satisfactory correction shall be made and retesting accomplished. Testing, correcting, and retesting shall be made at no additional cost to the Government.

END OF SECTION

This page intentionally blank

SECTION 02722

AGGREGATE BASE COURSE

PART 1 GENERAL

1.1 REFERENCES

The publications listed below form a part of this specification to the extent referenced. The publications are referred to in the text by basic designation only.

AMERICAN ASSOCIATION OF STATE HIGHWAY AND TRANSPORTATION OFFICIALS (AASHTO)

AASHTO T 180	(1993) Moisture-Density Relations of Soils Using a 4.54-kg (10-lb) Rammer and an 457 mm (18-in) Drop

AMERICAN SOCIETY FOR TESTING AND MATERIALS (ASTM)

ASTM C 29/C 29M	(1997) Bulk Density ("Unit Weight") and Voids in Aggregate
ASTM C 88	(1990) Soundness of Aggregates by Use of Sodium Sulfate or Magnesium Sulfate
ASTM C 117	(1995) Materials Finer Than 75 micrometer (No. 200) Sieve in Mineral Aggregates by Washing
ASTM C 127	(1988; R 1993) Specific Gravity and Absorption of Course Aggregate
ASTM C 128	(1993) Specific Gravity and Absorption of Fine Aggregate
ASTM C 131	(1996) Resistance to Degradation of Small-Size Coarse Aggregate by Abrasion and Impact in the Los Angeles Machine
ASTM C 136	(1996a) Sieve Analysis of Fine and Coarse Aggregates
ASTM D 75	(1987; R 1992) Sampling Aggregates
ASTM D 422	(1963; R 1990) Particle-Size Analysis of Soils
ASTM D 1556	(1990; R 1996) Density and Unit Weight of Soil in Place by the Sand-Cone Method
ASTM D 1557	(1991) Laboratory Compaction Characteristics of Soil Using Modified Effort (56,000 ft-lbf/cu. ft. (2,700 kN-m/cu. m.))

ASTM D 2167	(1994) Density and Unit Weight of Soil in Place by the Rubber Balloon Method
ASTM D 2487	(1993) Classification of Soils for Engineering Purposes (Unified Soil Classification System)
ASTM D 2922	(1996) Density of Soil and Soil-Aggregate in Place by Nuclear Methods (Shallow Depth)
ASTM D 3017	(1996) Water Content of Soil and Rock in Place by Nuclear Methods (Shallow Depth)
ASTM D 4318	(1995a) Liquid Limit, Plastic Limit, and Plasticity Index of Soils
ASTM E 11	(1995) Wire Cloth Sieves for Testing Purposes

1.2 DEFINITIONS

For the purposes of this specification, the following definitions apply.

1.2.1 Aggregate Base Course

Aggregate base course (ABC) is well graded, durable aggregate uniformly moistened and mechanically stabilized by compaction.

1.2.2 Graded-crushed Aggregate Base Course (Not Applicable)

1.2.3 Degree of Compaction

Degree of compaction shall be expressed as a percentage of the maximum density obtained by the test procedure presented in ASTM D 1557 or AASHTO T 180, Method D as applicable.

1.3 UNIT PRICES (NOT APPLICABLE)

1.4 SUBMITTALS

Government approval is required for submittals with a "GA" designation; submittals having an "FIO" designation are for information only. The following shall be submitted in accordance with SECTION 01330 SUBMITTAL PROCEDURES:

SD-01 Data

Plant, Equipment, and Tools; FIO.

List of proposed equipment to be used in performance of construction work, including descriptive data.

SD-09 Reports

Sampling and testing; FIO. Field Density Tests; GA.

Calibration curves and related test results prior to using the device or equipment being calibrated. Copies of field test results within 24 hours after the tests are performed. Certified copies of test results for approval not less than 30 days before material is required for the work.

1.5 SAMPLING AND TESTING

Sampling and testing shall be the responsibility of the Contractor. Sampling and testing shall be performed by a testing laboratory approved in accordance with SECTION 01451 CONTRACTOR QUALITY CONTROL. The materials shall be tested to establish compliance with the specified requirements; testing shall be performed at the specified frequency. The Contracting Officer may specify the time and location of the tests. Copies of test results shall be furnished to the Contracting Officer within 24 hours of completion of the tests.

1.5.1 Sampling

Samples for laboratory testing shall be taken in conformance with ASTM D 75. When deemed necessary, the sampling will be observed by the Contracting Officer.

1.5.2 Tests

The following tests shall be performed in conformance with the applicable standards listed.

1.5.2.1 Sieve Analysis

Sieve analysis shall be made in conformance with ASTM C 117, and ASTM C 136, and ASTM D 422 as applicable. Sieves shall conform to ASTM E 11.

1.5.2.2 Liquid Limit and Plasticity Index

Liquid limit and plasticity index shall be determined in accordance with ASTM D 4318.

1.5.2.3 Moisture-Density Determinations

The maximum density and optimum moisture content shall be determined in accordance with ASTM D 1557 or AASHTO T 180, Method D, as applicable.

1.5.2.4 Field Density Tests

Density shall be field measured in accordance with ASTM D 1556, ASTM D 2167, or ASTM D 2922. For the method presented in ASTM D 2922 the calibration curves shall be checked and adjusted if necessary using only the sand cone method(ASTM D 1556) as described in paragraph Calibration, of the ASTM publication. Tests performed in accordance with ASTM D 2922 result in a wet unit weight of soil and when using this method, ASTM D 3017 shall be used to determine the moisture content of the soil. The calibration curves furnished with the moisture gauges shall also be checked along with density calibration checks as described in ASTM D 3017. The calibration checks of both the density and moisture gauges shall be made by the prepared containers of material method, as described in paragraph

Calibration of ASTM D 2922, on each different type of material being tested at the beginning of a job and at intervals as directed.

1.5.2.5 Wear Test

Wear tests shall be made on ABC course material in conformance with ASTM C 131.

1.5.2.6 Soundness (Not Applicable)

1.5.2.7 Weight of Slag (Not Applicable)

1.5.3 Testing Frequency

1.5.3.1 Initial Tests

One of each of the following tests shall be performed on the proposed material prior to commencing construction to demonstrate that the proposed material meets all specified requirements when furnished. If materials from more than one source are going to be utilized, this testing shall be completed for each source.

a. Sieve Analysis.

b. Liquid limit and plasticity index moisture-density relationship.

c. Moisture-density relationship.

d. Wear.

1.5.3.2 In Place Tests

One of each of the following tests shall be performed on samples taken from the placed and compacted ABC. Samples shall be taken and tested at the rates indicated.

a. Density tests shall be performed on every lift of material placed and at a frequency of one set of tests for every 1650 square meters, or portion thereof, of completed area.

b. Sieve Analysis shall be performed for every 3345 square meters, or portion thereof, of material placed.

c. Liquid limit and plasticity index tests shall be performed at the same frequency as the sieve analysis.

1.5.4 Approval of Material

The source of the material shall be selected 30 days prior to the time the material will be required in the work. Tentative approval of material will be based on initial test results. Final approval of the materials will be based on sieve analysis, liquid limit, and plasticity index tests performed on samples taken from the completed and fully compacted ABC.

1.6 WEATHER LIMITATIONS

Construction shall be done when the atmospheric temperature is above 35 degrees F. When the temperature falls below 35 degrees F, the Contractor shall protect all completed areas by approved methods against detrimental effects of freezing. Completed areas damaged by freezing, rainfall, or other weather conditions shall be corrected to meet specified requirements.

1.7 PLANT, EQUIPMENT, AND TOOLS

All plant, equipment, and tools used in the performance of the work will be subject to approval before the work is started and shall be maintained in satisfactory working condition at all times. The equipment shall be adequate and shall have the capability of producing the required compaction, meeting grade controls, thickness control, and smoothness requirements as set forth herein.

PART 2 PRODUCTS

2.1 AGGREGATES

The ABC shall consist of clean, sound, durable particles of crushed stone, crushed gravel, crushed recycled concrete, angular sand, or other approved material. ABC shall be free of lumps of clay, organic matter, and other objectionable materials or coatings. The portion retained on the No. 4 sieve shall be known as coarse aggregate; that portion passing the No. 4 sieve shall be known as fine aggregate.

2.1.1 Coarse Aggregate

Coarse aggregates shall be angular particles of uniform density. When the coarse aggregate is supplied from more than one source, aggregate from each source shall meet the specified requirements and shall be stockpiled separately.

a. Crushed Gravel: Crushed gravel shall be manufactured by crushing gravels, and shall meet all the requirements specified below.

b. Crushed Stone: Crushed stone shall consist of freshly mined quarry rock, and shall meet all the requirements specified below.

c. Crushed Recycled Concrete: Crushed recycled concrete shall consist of previously hardened portland cement concrete or other concrete containing pozzolanic binder material. The recycled material shall be free of all reinforcing steel, bituminous concrete surfacing, and any other foreign material and shall be crushed and processed to meet the required gradations for coarse aggregate. Crushed recycled concrete shall meet all other applicable requirements specified below.

2.1.1.1 Aggregate Base Course

ABC coarse aggregate shall not show more than 50 percent loss when subjected to the Los Angeles abrasion test in accordance with ASTM C 131. The amount of flat and elongated particles shall not exceed 30 percent. A flat particle is one having a ratio of width to thickness greater than 3; an elongated particle is one having a ratio of length to width greater than 3. In the portion retained on each sieve specified, the crushed aggregates shall contain at least 50 percent by weight of crushed pieces having two or more freshly fractured faces with the area of each face being at least equal to 75 percent of the

smallest midsectional area of the piece. When two fractures are contiguous, the angle between planes of the fractures must be at least 30 degrees in order to count as two fractured faces. Crushed gravel shall be manufactured from gravel particles 50 percent of which, by weight, are retained on the maximum size sieve listed in TABLE 1.

2.1.2 Fine Aggregate

Fine aggregates shall be angular particles of uniform density. When the fine aggregate is supplied from more than one source, aggregate from each source shall meet the specified requirements.

2.1.2.1 Aggregate Base Course

ABC fine aggregate shall consist of screenings, angular sand, crushed recycled concrete fines, or other finely divided mineral matter processed or naturally combined with the coarse aggregate.

2.1.3 Gradation Requirements

The specified gradation requirements shall apply to the completed base course. The Contractor shall select one of the following gradations subject to approval. The aggregates shall be continuously well graded within the limits specified in TABLE 1. Sieves shall conform to ASTM E 11.

TABLE I. GRADATION OF AGGREGATES

Percentage by Weight Passing Square-Mesh Sieve

Sieve Designation	No. 1	No. 2
50 mm	----	---
37 mm	100	---
25 mm	60-100	100
12 mm	30-65	40-70
4.75 mm	20-50	20-50
2.00 mm	15-40	15-40
0.425 mm	5-25	5-25
0.075 mm	0-10	0-10

NOTE 1: The values are based on aggregates of uniform specific gravity. If materials from different sources are used for the coarse and fine aggregates, they shall be tested in accordance with ASTM C 127 and ASTM C 128 to determine their specific gravities. If the specific gravities vary by more than 10 percent, the percentages passing the various sieves shall be corrected as directed by the Contracting Officer.

2.1.4 Liquid Limit and Plasticity Index

Liquid limit and plasticity index requirements shall apply to the completed course and shall also apply to any component that is blended to meet the required gradation. The portion of any component or of the completed course passing the No. 40 sieve shall be either nonplastic or have a liquid limit not greater than 25 and a plasticity index not greater than 5.

PART 3 EXECUTION

3.1 GENERAL REQUIREMENTS

When the ABC is constructed in more than one layer, the previously constructed layer shall be cleaned of loose and foreign matter by sweeping with power sweepers or power brooms, except that hand brooms may be used in areas where power cleaning is not practicable. Adequate drainage shall be provided during the entire period of construction to prevent water from collecting or standing on the working area. Line and grade stakes shall be provided as necessary for control. Grade stakes shall be in lines parallel to the centerline of the area under construction and suitably spaced for string lining.

3.2 OPERATION OF AGGREGATE SOURCES

Aggregates shall be obtained from offsite sources.

3.3 STOCKPILING MATERIAL

Prior to stockpiling of material, storage sites shall be cleared and leveled by the Contractor. All materials, including approved material available from excavation and grading, shall be stockpiled in the manner and at the locations designated. Aggregates shall be stockpiled on the cleared and leveled areas designated by the Contracting Officer to prevent segregation. Materials obtained from different sources shall be stockpiled separately.

3.4 PREPARATION OF UNDERLYING COURSE

Prior to constructing the ABC, the underlying course or subgrade shall be cleaned of all foreign substances. At the time of construction of the ABC, the underlying course shall contain no frozen material. The surface of the underlying course or subgrade shall meet specified compaction and surface tolerances. The underlying course shall conform to SECTION 02300 EARTHWORK. Ruts or soft yielding spots in the underlying courses, areas having inadequate compaction, and deviations of the surface from the requirements set forth herein shall be corrected by loosening and removing soft or unsatisfactory material and by adding approved material, reshaping to line and grade, and recompacting to specified density requirements. The finished underlying course shall not be disturbed by traffic or other operations and shall be maintained by the Contractor in a satisfactory condition until the ABC is placed.

3.5 INSTALLATION

3.5.1 Mixing the Materials

The coarse and fine aggregates shall be mixed in a stationary plant, or in a traveling plant or bucket loader on an approved paved working area. The Contractor shall make adjustments in mixing procedures or in equipment as directed to obtain true grades, to minimize segregation or degradation, to obtain the required water content, and to insure a satisfactory ABC meeting all requirements of this specification.

3.5.2 Placing

The mixed material shall be placed on the prepared subgrade in layers of uniform thickness with an approved spreader. When a compacted layer 150 mm or less in thickness is required, the material shall be placed in a single layer. When a compacted layer in excess of 150 mm is required, the material shall be placed in layers of equal thickness. No layer shall exceed 150 mm or less than 75 mm when compacted. The layers shall be so placed that when compacted they will be true to the grades or levels required with the least possible surface disturbance. Where the ABC is placed in more than one layer, the previously constructed layers shall be cleaned of loose and foreign matter by sweeping with power sweepers, power brooms, or hand brooms, as directed. Such adjustments in placing procedures or equipment shall be made as may be directed to obtain true grades, to minimize segregation and degradation, to adjust the water content, and to insure an acceptable ABC.

3.5.3 Grade Control

The finished and completed ABC shall conform to the lines, grades, and cross sections shown. Underlying materials shall be excavated and prepared at sufficient depth for the required ABC thickness so that the finished ABC with the subsequent surface course will meet the designated grades.

3.5.4 Edges of Base Course

The ABC shall be placed so that the completed section will be a minimum of 1.5 meters wider, on all sides, than the next layer that will be placed above it. Additionally, approved fill material shall be placed along the outer edges of ABC in sufficient quantities to compact to the thickness of the course being constructed, or to the thickness of each layer in a multiple layer course, allowing in each operation at least a 600 mm width of this material to be rolled and compacted simultaneously with rolling and compacting of each layer of ABC. If this base course material is to be placed adjacent to another pavement section, then the layers for both of these sections shall be placed and compacted along this edge at the same time.

3.5.5 Compaction

Each layer of the ABC shall be compacted as specified with approved compaction equipment. Water content shall be maintained during the compaction procedure at an optimum to meet the desired compaction as determined from laboratory tests as specified in paragraph SAMPLING AND TESTING. Rolling shall begin at the outside edge of the surface and proceed to the center, overlapping on successive trips at least one-half the width of the roller. Alternate trips of the roller shall be slightly different lengths. Speed of the roller shall be such that displacement of the aggregate does not occur. In all places not accessible to the rollers, the mixture shall be compacted with hand-operated power tampers. Compaction shall continue until each layer has a degree of compaction that is at least 100 percent of laboratory maximum density through the full depth of the layer. The Contractor shall make such adjustments in compacting or finishing procedures as may be directed to obtain true grades, to minimize segregation and degradation, to reduce or increase water content, and to ensure a satisfactory ABC. Any materials that are found to be unsatisfactory shall be removed and replaced with satisfactory material or reworked, as directed, to meet the requirements of this specification.

3.5.6 Thickness

Compacted thickness of the aggregate course shall be shown on the plans. The total compacted thickness of the ABC course shall be within 13 mm of the thickness indicated. Where the measured thickness is more than 13 mm deficient, such areas shall be corrected by scarifying, adding new material of proper gradation, reblading, and recompacting as directed. Where the measured thickness is more than 13 mm thicker than indicated, the course shall be considered as conforming to the specified thickness requirements. Average job thickness shall be the average of all thickness measurements taken for the job, but shall be within 6 mm of the thickness indicated. The total thickness of the ABC shall be measured at intervals in such a manner as to ensure one measurement for each 500 square meters of base course. Measurements shall be made in 75 mm diameter test holes penetrating the base course.

3.5.7 Proof Rolling (Not Applicable)

3.5.8 Finishing

The surface of the top layer of ABC shall be finished after final compaction by cutting any overbuild to grade and rolling with a steel-wheeled roller. Thin layers of material shall not be added to the top layer of base course to meet grade. If the elevation of the top layer of ABC is 13 mm or more below grade, then the top layer should be scarified to a depth of at least 75 mm and new material shall be blended in and compacted to bring to grade. Adjustments to rolling and finishing procedures shall be made as directed to minimize segregation and degradation, obtain grades, maintain moisture content, and insure an acceptable base course. Should the surface become rough, corrugated, uneven in texture, or traffic marked prior to completion, the unsatisfactory portion shall be scarified, reworked and recompacted or it shall be replaced as directed.

3.5.9 Smoothness

The surface of the top layer shall show no deviations in excess of 10 mm when tested with a 3 meter straightedge. Measurements shall be taken in successive positions parallel to the centerline of the area to be paved. Measurements shall also be taken perpendicular to the centerline at 15 meter intervals. Deviations exceeding this amount shall be corrected by removing material and replacing with new material, or by reworking existing material and compacting it to meet these specifications.

3.6 TRAFFIC

Traffic shall not be allowed on the completed ABC. Heavy equipment shall not be permitted except when necessary to construction, and then the area shall be protected against marring or damage to the completed work.

3.7 MAINTENANCE

The ABC shall be maintained in a satisfactory condition until the full pavement section is completed and accepted. Maintenance shall include immediate repairs to any defects and shall be repeated as often as necessary to keep the area intact. Any ABC that is not paved over prior to the onset of winter, shall be retested to verify that it still complies with the requirements of this specification. Any area of ABC that is damaged shall be reworked or replaced as necessary to comply with this specification.

3.8 DISPOSAL OF UNSATISFACTORY MATERIALS

Any unsuitable materials that must be removed shall be disposed of outside the limits of Government-controlled land. No additional payments will be made for materials that must be replaced.

END OF SECTION

SECTION 02741

BITUMINOUS PAVING FOR ROADS, STREETS AND OPEN STORAGE AREAS

PART 1 GENERAL

1.1 REFERENCES

The publications listed below form a part of this specification to the extent referenced. The publications are referred to in the text by basic designation only.

AMERICAN SOCIETY FOR TESTING AND MATERIALS (ASTM)

ASTM C 29/C 29M	(1997) Bulk Density (Unit Weight) and Voids in Aggregate
ASTM C 88	(1990) Soundness of Aggregates by Use of Sodium Sulfate or Magnesium Sulfate
ASTM C 117	(1995) Materials Finer than 75 micrometer (No. 200) Sieve in Mineral Aggregates by Washing
ASTM C 127	(1988; R 1993) Specific Gravity and Absorption of Coarse Aggregate
ASTM C 128	(1993) Specific Gravity and Absorption of Fine Aggregate
ASTM C 131	(1996) Resistance to Degradation of Small-Size Coarse Aggregate by Abrasion and Impact in the Los Angeles Machine
ASTM C 136	(1996a) Sieve Analysis of Fine and Coarse Aggregates
ASTM C 183	(1995a) Sampling and the Amount of Testing of Hydraulic Cement
ASTM D 5	(1995) Penetration of Bituminous Materials
ASTM D 75	(1987; R 1992) Sampling Aggregates
ASTM D 140	(1993) Sampling Bituminous Materials
ASTM D 242	(1995) Mineral Filler for Bituminous Paving Mixtures
ASTM D 422	(1963; R 1990) Particle-Size Analysis of Soils
ASTM D 946	(1982; R 1993) Penetration-Graded Asphalt Cement for Use in Pavement Construction

ASTM D 1250	(1980; R 1997) Petroleum Measurement Tables
ASTM D 1856	(1995a) Recovery of Asphalt from Solution by Abson Method
ASTM D 2041	(1995) Theoretical Maximum Specific Gravity and Density of Bituminous Paving Mixtures
ASTM D 2172	(1995) Quantitative Extraction of Bitumen from Bituminous Paving Mixtures
ASTM D 2216	(1992) Laboratory Determination of Water (Moisture) Content of Soil and Rock
ASTM D 3381	(1992) Viscosity-Graded Asphalt Cement for Use in Pavement Construction
ASTM D 3515	(1996) Hot-Mixed, Hot-Laid Bituminous Paving Mixtures
ASTM D 4791	(1995) Flat Particles, Elongated Particles, or Flat and Elongated Particles in Coarse Aggregate

CORPS OF ENGINEERS (COE) HANDBOOK FOR CONCRETE AND CEMENT

CRD-C 119	(1953; Rev Jun 1963) Flat and Elongated Particles in Coarse Aggregate
CRD-C 649	(1995) Standard Test Method for Unit Weight, Marshall Stability, and Flow of Bituminous Mixtures
CRD-C 650	(1995) Standard Test Method for Density and Percent Voids in Compacted Bituminous Pavement Mixtures
CRD-C 651	(1995) Standard Gyratory Testing Machine Method for Design of Hot-Mix Bituminous Pavement Mixtures
CRD-C 652	(1995) Standard Test Method for Measurement of Reduction in Marshall Stability of Bituminous Mixtures Caused by Immersion

1.2 UNIT PRICES (NOT APPLICABLE)

1.3 SUBMITTALS

Government approval is required for submittals with a "GA" designation; submittals having an "FIO" designation are for information only. The following shall be submitted in accordance with SECTION 01330 SUBMITTAL PROCEDURES:

SD-09 Reports

Bituminous Pavement; GA.

Copies of test results.

The following shall be submitted by the Contractor for approval prior to the start of production and shall meet all requirements specified in PART 2 (PRODUCTS).

a. Coarse Aggregate
- -Percentage of wear (ASTM C-131)
- -Percentage of loss (ASTM C-88 and ASTM C-131)
- -Percentage of fractured faces
- -Percent flat and elongated pieces (CRD C-119)

b. Fine Aggregate
- -Percent of natural sand content
- -Percent of fractured faces
- -Percentage of loss (ASTM C-88)

c. Aggregate Gradation

d. Job Mix Formula plots and test results including index of retained stability, and type of asphalt used.

Records

All test results during construction shall be submitted to the Contracting Officer during progress of work.

1.4 PLANT, EQUIPMENT, MACHINES, AND TOOLS

1.4.1 General

The bituminous plant shall be of such capacity to produce the quantities of bituminous mixtures required. Hauling equipment, paving machines, rollers, miscellaneous equipment, and tools shall be provided in sufficient numbers and capacity and in proper working condition to place the bituminous paving mixtures at a rate equal to the plant output.

1.4.2 Mixing Plants

The mixing plant shall be an automatic or semiautomatic controlled commercially manufactured unit designed and operated to consistently produce a mixture within the job-mix formula (JMF). The plant shall have a minimum capacity of 100 metric tons per hour.

1.4.3 Straightedge

The Contractor shall furnish and maintain at the site, in good condition, one 3.66 m straightedge for each bituminous paver. Straightedge shall be made available for Government use. Straightedges shall be constructed of aluminum or other lightweight metal and shall have blades of box or box-girder cross section with flat bottom reinforced to ensure rigidity and accuracy. Straightedges shall have handles to facilitate movement on pavement.

1.5 WEATHER LIMITATIONS

Unless otherwise directed, bituminous courses shall not be constructed when temperature of the surface of the existing pavement or base course is below 5 degrees C. or wet. When paving in temperatures below 10 degrees C or during the months between 1 October and 1 April pneumatic tired rollers shall be used as required in paragraph PLACING. Tack coat shall be applied when temperatures are above 4.5 degrees C and surfaces are dry.

1.6 PROTECTION OF PAVEMENT

After final rolling, no vehicular traffic of any kind shall be permitted on the pavement until the pavement has cooled to 60 degrees C.

1.7 GRADE AND SURFACE-SMOOTHNESS REQUIREMENTS

Finished surface of bituminous courses, when tested as specified below and in paragraph ACCEPTABILITY OF WORK, shall conform to gradeline and elevations shown and to surface-smoothness requirements specified.

1.7.1 Plan Grade

The grade of the completed surface shall not deviate more than 15 mm from the plan grade.

1.7.2 Surface Smoothness

When a 3.66 m straightedge is laid on the surface parallel with the centerline of the paved area or transverse from crown to pavement edge, the surface shall vary not more than 6.5 mm from the straightedge.

1.8 GRADE CONTROL

Lines and grades shall be established and maintained by means of line and grade stakes placed at site of work in accordance with the Special Contract Requirements. Elevations of bench marks used by the Contractor for controlling pavement operations at the site of work will be determined, established, and

maintained by the Contractor. Finished pavement elevations shown shall be established and controlled at the site of work by the Contractor.

1.9 SAMPLING AND TESTING

1.9.1 Aggregates

1.9.1.1 General

Samples of aggregates shall be taken by the Contractor for approval of aggregate sources and stockpiles prior to the start of production and at times during production of the bituminous mixtures. Unless otherwise directed, ASTM D 75 shall be used in sampling coarse and fine aggregate, and ASTM C 183 shall be used in sampling mineral filler. All tests necessary to determine compliance with requirements specified herein will be made by the Contractor.

1.9.1.2 Sources

Sources of aggregates shall be selected well in advance of the time the materials are required in the work. Test reports shall be submitted before starting production, indicating that aggregates meet all quality requirements specified herein. Approval of the source of aggregate does not relieve the Contractor of responsibility for delivery at the jobsite of aggregates that meet the requirements specified herein.

1.9.2 Bituminous Materials

Sampling and testing of bituminous materials will be accomplished by the Contractor. Sampling shall materials shall be obtained by the Contractor; sampling shall be in accordance with ASTM D 140

1.9.3 Bituminous Mixtures

Sampling and testing of bituminous mixtures will be accomplished by the Contractor.

1.10 DELIVERY, STORAGE, AND HANDLING OF MATERIALS

1.10.1 Mineral Aggregates

Mineral aggregates shall be delivered to the site of the bituminous mixing plant and stockpiled in such manner as to preclude fracturing of aggregate particles, segregation, contamination, or intermingling of different materials in the stockpiles or cold-feed hoppers. Mineral filler shall be delivered, stored, and introduced into the mixing plant in a manner to preclude exposure to moisture or other detrimental conditions.

1.10.2 Bituminous Materials

Bituminous materials shall be maintained at appropriate temperature during storage but shall not be heated by application of direct flame to walls of storage tanks or transfer lines. Storage tanks, transfer lines, and weigh buckets shall be thoroughly cleaned before a different type or grade of bitumen is introduced into the system. The asphalt cement shall be heated sufficiently to allow satisfactory pumping of the material; however, the storage temperature shall be maintained below 150 degrees C.

1.11 ACCESS TO PLANT AND EQUIPMENT

The Contracting Officer shall have access at all times to all parts of the paving plant for checking adequacy of the equipment in use; inspecting operation of the plant; verifying weights, proportions, and character of materials; and checking temperatures maintained in preparation of the mixtures.

PART 2 PRODUCTS

2.1 BITUMINOUS HOT MIX

Bituminous hot mix shall consist of coarse aggregate, fine aggregate, mineral filler, bituminous material, and approved additives, if required, of the qualities and in the proportions specified and shall conform to the requirements contained in paragraphs PROPORTIONING OF MIXTURE and ACCEPTABILITY OF WORK.

2.1.1 Aggregates

Aggregates shall consist of crushed stone, crushed gravel, crushed slag, screening, sand, and mineral filler, as required. The portion of materials retained on the 4.75 mm sieve shall be known as coarse aggregate, the portion passing the 4.75 mm sieve and retained on the 0.075 millimeter sieve as fine aggregate, and the portion passing the 0.075 millimeter sieve as mineral filler. Aggregate gradation shall conform to gradation(s) specified in TABLE 1. TABLE 1 is based on aggregates of uniform specific gravity; the percentage passing various sieves may be changed by the Contracting Officer when aggregates of varying specific gravities are used. Adjustments of percentage passing various sieves may be changed by the Contracting Officer when aggregates vary by more than 0.2 in specific gravity.

TABLE 1. AGGREGATE GRADATION (WASHINGTON)

Sieve Size	Percent Passing
16 mm	100
12.5 mm	90-100
9.5 mm	75-90
6.3 mm	55-75
2 mm	32-48
0.425 mm	11-24
0.180 mm	6-15
0.075 mm	3-7

2.1.1.1 Coarse Aggregate

Coarse aggregate shall consist of clean, sound, durable particles meeting the following requirements.

a. Percentage of loss shall not exceed 40 after 500 revolutions, as determined in accordance with ASTM C 131.

b. Percentage of loss shall not exceed 18 after five cycles performed in accordance with ASTM C 88, using magnesium sulfate.

c. The dry weight of crushed slag shall not be less than 1200 kg/cubic m, as determined in accordance with ASTM C 29/C 29M.

d. Crushed gravel retained on the 4.75 mm sieve and each coarser sieve shall contain at least 75 percent by weight of crushed pieces having one or more fractured faces with the area of each face equal to at least 75 percent of the smallest midsectional area of piece. When two fractures are contiguous, the angle between planes of fractures shall be at least 30 degrees to count as two fractured faces.

e. Particle shape of crushed aggregates shall be essentially cubical. The quantity of flat and elongated particles in any sieve size shall not exceed 20 percent by weight, when determined in accordance with ASTM D 4791.

2.1.1.2 Fine Aggregate

Fine aggregate shall consist of clean, sound, durable particles, including natural sand or crushed stone, or gravel that meets requirements for wear and soundness specified for coarse aggregate. Fine aggregate produced by crushing gravel shall have at least 90 percent by weight of crushed particles having two or more fractured faces in the portion retained on the 0.600 mm sieve. This requirement shall apply to the material before blending with natural sand when blending is necessary. Quantity of natural sand to be added to the wearing- and intermediate-course mixtures shall not exceed 25 percent by weight of coarse and fine aggregate and material passing the 0.075 mm sieve. Natural sand shall be clean and free from clay and organic matter. Percentage of loss shall not exceed 15 after five cycles of the soundness test performed in accordance with ASTM C 88, using magnesium sulfate.

2.1.1.3 Mineral Filler.

Mineral filler shall conform to ASTM D 242.

Grain size in mm	Percent Finer
0.05	70-100
0.02	35-65
0.005	10-22

[Grain size shall be determined in accordance with ASTM D 422.]

2.1.2 Bituminous Material

Asphalt cement shall conform to ASTM D 3381, Grade AR 4000W.

2.1.3 Additives

The use of additives such as antistripping and antifoaming agents is subject to approval.

2.2 PROPORTIONING OF MIXTURE

2.2.1 Job Mix Formula

The JMF for the bituminous mixture will be developed by the Contractor using COE CRD-C 649, C650, C651, and C652. The mix design shall meet the test requirements presented in this section and shall show the following:

a. Graphical Plots for a minimum of 4 asphalt contents for

Stability	vs. A/C content
Unit wt. Mix	vs. A/C content
Percent Total Voids Filled	vs. A/C content
Percent Voids, Total Mix	vs. A/C content
Flow	vs. A/C content

The optimum asphalt content shall be calculated by averaging the peaks of curves 1 through 4 and the stability, flow, and voids must fall within criteria specified in paragraph: TEST PROPERTIES OF BITUMINOUS MIXTURES.

b. The percentage and specific gravity of each bin fraction of aggregate. (This will be used to determine the theoretical specific gravity.)

c. Absorption of the entire blend.

d. Specific gravity of the asphalt.

e. Reduction in Stability by Immersion.

Previously established test results will be accepted provided that the tests were performed within the last 2 years and conform to requirements specified above. The job-mix-formula will be allowed tolerances given in Table 2 herein.

TABLE 2. JOB-MIX TOLERANCES

Tolerance, Material	Plus or Minus
Aggregate passing 4.75 mm sieve or larger	5 percent
Aggregate passing 2.36, 1.18, 0.6, and 0.3 mm sieves	4 percent
Aggregate passing 150 and 75 micrometer sieves	2 percent
Bitumen	0.25 percent
Temperature of mixing	14 degrees C

2.2.2 Test Properties of Bituminous Mixtures

Finished mixture shall meet requirements described below when tested in accordance with CRD-C-649,650,651, and 652. All samples will be compacted with 50 blows of specified hammer on each side of sample. When bituminous mixture fails to meet the requirements specified below, the paving operation shall be stopped until the cause of noncompliance is determined and corrected.

2.2.2.1 Stability, Flow, and Voids

Requirements for stability, flow, and voids are shown in TABLES 3 and 4 for nonabsorptive and absorptive aggregates, respectively.

TABLE 3. NONABSORPTIVE-AGGREGATE MIXTURE

	Wearing Course
Stability minimum, newtons	2200
Flow maximum, 0.25 mm units	20
Voids total mix, percent (1)	3-5
Voids filled with bitumen, percent (2)	75-85

(1) The Contracting Officer may permit deviations from limits specified when gyratory method of design is used to develop the JMF.

(2) The Contracting Officer may permit deviation from limits specified for voids filled with bitumen in the intermediate course in order to stay within limits for percent voids total mix.

TABLE 4. ABSORPTIVE-AGGREGATE MIXTURE

	Wearing Course
Stability minimum, newtons	2200
Flow maximum, 0.25 mm units	20
Voids total mix, percent (1)	2-4
Voids filled with bitumen, percent (2)	80-90

(1) The Contracting Officer may permit deviations from limits specified when gyratory method of design is used to develop the JMF.

(2) The Contracting Officer may permit deviation from limits specified for voids filled with bitumen in the intermediate course in order to stay within limits for percent voids total mix.

a. When the water-absorption value of the entire blend of aggregate does not exceed 2.5 percent as determined in accordance with ASTM C 127 and ASTM C 128, the aggregate is designated as nonabsorptive. The theoretical specific gravity computed from the apparent specific gravity or ASTM D 2041 will be used in computing voids total mix and voids filled with bitumen, and the mixture shall meet requirements in TABLE 3.

b. When the water-absorption value of the entire blend of aggregate exceeds 2.5 percent as determined in accordance with ASTM C 127 and ASTM C 128, the aggregate is designated as absorptive. The theoretical specific gravity computed from the bulk-impregnated specific gravity method contained in ASTM D 2041 shall be used in computing percentages of voids total mix and voids filled with bitumen; the mixture shall meet requirements in TABLE 4.

2.2.2.2 Stability

The index of retained stability must be greater than 75 percent as determined by CRD-C 652. When the index of retained stability is less than 75, the aggregate stripping tendencies may be countered by the use of hydrated lime or by treating the bitumen with an approved antistripping agent. The hydrated lime is considered as mineral filler and should be considered in the gradation requirements. The amount of hydrated lime or antistripping agent added to bitumen shall be sufficient, as approved, to produce an index of retained stability of not less than 75 percent. No additional payment will be made to the Contractor for addition of antistripping agent required.

2.3 Tack Coat Materials

Emulsified asphalt for tack coat materials shall conform to ASTM D 977 and D 2397 grades RS-1, SS-1, SS-1h, CRS-1, CSS-1, or CSS-1h.

PART 3 EXECUTION

3.1 BASE COURSE CONDITIONING

The surface of the base course will be inspected for adequate compaction and surface tolerances specified in SECTION 02722, AGGREGATE BASE COURSE. Unsatisfactory areas shall be corrected.

3.2 EXISTING PAVEMENT CONDITIONING

3.3 PREPARATION OF BITUMINOUS MIXTURES

Rates of feed of aggregates shall be regulated so that the moisture content and temperature of aggregates will be within specified tolerances. Aggregates, mineral filler, and bitumen shall be conveyed into the mixer in proportionate quantities required to meet the JMF. Mixing time shall be as required to obtain a uniform coating of the aggregate with the bituminous material. Temperature of bitumen at time of mixing shall not exceed 150 degrees C. Temperature of aggregate and mineral filler in the mixer shall not exceed 160 degrees C when bitumen is added. Overheated and carbonized mixtures or mixtures that foam shall not be used.

3.4 WATER CONTENT OF AGGREGATES

Drying operations shall reduce the water content of mixture to less than 0.75 percent. The water content test will be conducted in accordance with ASTM D 2216; the weight of the sample shall be at least 500 grams. If the water content is determined on hot bin samples, the water content will be a weighted average based on composition of blend.

3.5 STORAGE OF BITUMINOUS PAVING MIXTURE

Storage shall conform to the applicable requirements of ASTM D 3515; however, in no case shall the mixture be stored for more than 4 hours.

3.6 TRANSPORTATION OF BITUMINOUS MIXTURE

Transportation from paving plant to site shall be in trucks having tight, clean, smooth beds lightly coated with an approved releasing agent to prevent adhesion of the mixture to the truck bodies. Excessive releasing agent shall be drained prior to loading. Each load shall be covered with canvas or other approved material of ample size to protect mixture from weather and to prevent loss of heat. Loads that have crusts of cold, unworkable material or that have become wet will be rejected. Hauling over freshly placed material will not be permitted.

3.7 SURFACE PREPARATION OF UNDERLYING COURSE

Prior to placing of the wearing course, the underlying course shall be cleaned of all foreign or objectionable matter with power brooms and hand brooms.

3.8 PRIME COATING (NOT APPLICABLE)

3.9 TACK COATING

Contact surfaces of previously constructed base course, pavement, curbs, manholes, and other structures shall be sprayed with a thin coat of bituminous material. Tack coat shall be applied at the rate of 0.23 to 0.70 liters per square meter. The exact quantities within the ranges specified may be varied to suit field conditions.

3.9.1 APPLICATION

Following preparation and subsequent inspection of the surface, a tack coat shall be applied at the specified rate with uniform distribution over the surface to be treated. Following application of the tack coat and prior to application of the pavement, the material shall be allowed to cure (all moisture must be allowed to evaporate out of the emulsion). The tacked area shall be maintained by protecting the surface against damage and by repairing and retacking deficient areas at no additional cost to the Government. No more tack coat material shall be placed than can be covered in the same day. If required, clean, dry sand shall be spread to effectively blot up excess bituminous material.

3.10 PLACING

Bituminous courses shall be constructed only when the base course or existing pavement has no free water on the surface. Bituminous mixtures shall not be placed without ample time to complete spreading and rolling during daylight hours, unless approved satisfactory artificial lighting is provided.

3.10.1 Offsetting Joints (Not Applicable)

3.10.2 General Requirements for Use of Mechanical Spreader

Range of temperatures of mixtures, when dumped into the mechanical spreader, shall be as determined by the Contracting Officer. Mixtures having temperatures less than 110 degrees C when dumped into the mechanical spreader shall not be used. The mechanical spreader shall be adjusted and the speed regulated so that the surface of the course being laid will be smooth and continuous without tears and pulls, and of such depth that, when compacted, the surface will conform to the cross section indicated. Placing with respect to center line areas with crowned sections or high side of areas with one-way slope

shall be as directed. Each lot of material placed shall conform to requirements specified in paragraph ACCEPTABILITY OF WORK. Placing of the mixture shall be as nearly continuous as possible, and speed of placing shall be adjusted, as directed, to permit proper rolling. When segregation occurs in the mixture during placing, the spreading operation shall be suspended until the cause is determined and corrected.

3.10.3 Placing Strips Succeeding Initial Strips

In placing each succeeding strip after initial strip has been spread and compacted as specified below, the screed of the mechanical spreader shall overlap the previously placed strip 50 to 75 mm and be sufficiently high so that compaction produces a smooth dense joint. Mixture placed on the edge of a previously placed strip by the mechanical spreader shall be pushed back to the edge of the strip by use of a lute. Excess mixture shall be removed and wasted.

3.10.4 Handspreading in Lieu of Machine Spreading

In areas where the use of machine spreading is impractical, the mixture shall be spread by hand. Spreading shall be in a manner to prevent segregation. The mixture shall be spread uniformly with hot rakes in a loose layer of thickness that, when compacted, will conform to required grade, density, and thickness.

3.11 COMPACTION OF MIXTURE

Rolling shall begin as soon after placing as the mixture will bear a roller without undue displacement. Delays in rolling freshly spread mixture will not be permitted. After initial rolling, preliminary tests of crown, grade, and smoothness shall be made by the Contractor. Deficiencies shall be corrected so that the finished course will conform to requirements for grade and smoothness specified herein. Crown, grade, and smoothness will be checked in each lot of completed pavement by the Contracting Officer for compliance and will be evaluated as specified in paragraph ACCEPTABILITY OF WORK. After the Contractor is assured of meeting crown, grade, and smoothness requirements, rolling shall be continued until a mat density of 97.0 to 100.0 percent and a joint density of 95.0 to 100.0 percent of density of laboratory-compacted specimens of the same mixture is obtained. The density will be determined and evaluated as specified in paragraph ACCEPTABILITY OF WORK. Places inaccessible to rollers shall be thoroughly compacted with hot hand tampers.

3.11.1 Correcting Deficient Areas

Mixtures that become contaminated or are defective shall be removed to the full thickness of the course. Edges of the area to be removed shall be cut so that sides are perpendicular and parallel to the direction of traffic and so that the edges are vertical. Edges shall be sprayed with bituminous tack coat. Fresh paving mixture shall be placed in the excavated areas in sufficient quantity so that the finished surface will conform to grade and smoothness requirements. Paving mixture shall be compacted to the density specified herein. Skin patching of an area that has been rolled shall not be permitted.

3.12 JOINTS

3.12.1 General

Joints between old and new pavements, between successive work days, or joints that have become cold (less than 80 degrees C) shall be made to ensure continuous bond between the old and new sections of the course. All joints shall have the same texture and smoothness as other sections of the course. Contact surfaces of previously constructed pavements coated by dust, sand, or other objectionable material shall be cleaned by brushing or shall be cut back as directed. When directed by the Contracting Officer, the surface against which new material is placed shall be sprayed with a thin, uniform tack coat of bituminous material. Material shall be applied far enough in advance of placement of a fresh mixture to ensure adequate curing. Care shall be taken to prevent damage or contamination of the sprayed surface.

3.12.2 Transverse Joints

The roller shall pass over the unprotected end of a strip of freshly placed material only when placing is discontinued or delivery of the mixture is interrupted to the extent that the material in place may become cold. In all cases, prior to continuing placement, the edge of previously placed pavement shall be cut back to expose an even vertical surface for full thickness of the course. In continuing placement of a strip, the mechanical spreader shall be positioned on the transverse joint so that sufficient hot mixture will be spread to obtain a joint after rolling that conforms to the required density and smoothness specified herein.

3.12.3 Longitudinal Joints

Edges of a previously placed strip shall be prepared such that the pavement in and immediately adjacent to the joint between this strip and the succeeding strip meets the requirements for grade, smoothness, and density specified in paragraph ACCEPTABILITY OF WORK.

3.13 ACCEPTABILITY OF WORK

3.13.1 General

A lot shall be that quantity of construction that will be evaluated for compliance with specification requirements. A lot shall be equal to one day’s production. The Contractor shall perform all tests as specified herein at the frequency specified in SECTION 01451: CONTRACTOR QUALITY CONTROL.

3.13.1.1 Lot Evaluation

Each lot shall be evaluated for gradation, asphalt content, density, and surface smoothness.

3.13.1.2 Lot Failure

When a lot of material fails to meet the specification requirements, that lot shall be removed and replaced.

3.13.2 Aggregate Gradation

The aggregate gradation shall fall within the job mix tolerances specified in Table 2.

3.13.3 Asphalt Content

The asphalt content must be within 0.30 percent of the job mix formula.

3.13.4 Density

The average mat and joint densities will be expressed as a percentage of the laboratory density. The laboratory density for each lot will be determined in accordance with CRD-C 650.

3.13.4.1 Field Density

The field density shall be determined and the average mat and joint density shall be 95 percent compacted specimens of the same mixture.

3.13.4.2 Lot Density

All density results on a lot will be completed and reported within 24 hours after construction of that lot.

3.13.5 Grade

Grade-conformance tests will be conducted by the Contractor. The finished surface of the pavement will be tested for conformance with plan-grade requirements.

3.13.6 Surface Smoothness

After completion of final rolling of a lot, the compacted surface will be tested by the Contractor with a 3.66 m straightedge. Measurements will be made perpendicular to and across all mats at distances along the mat not to exceed 8 m. Location and deviation from straightedge of all measurements will be recorded. Any joint or mat area surface deviation which exceeds the tolerance given in paragraph GRADE AND SURFACE-SMOOTHNESS REQUIREMENTS by more than 50 percent shall be corrected to meet the specification requirements. The Contractor shall remove the deficient area and replace with fresh paving mixture at no additional cost to the Government. Sufficient material shall be removed to allow at least 25 mm of asphalt concrete to be placed. Skin patching for correcting low areas or planing for correcting high areas shall not be permitted.

END OF SECTION

SECTION 02763

PAVEMENT MARKINGS

PART 1 GENERAL

1.1 REFERENCES

The publications listed below form a part of this specification to the extent referenced. The publications are referred to in the text by basic designation only.

AMERICAN ASSOCIATION OF STATE HIGHWAY AND TRANSPORTATION OFFICIALS (AASHTO)

AMERICAN SOCIETY FOR TESTING AND MATERIALS (ASTM)

ASTM D 792	(1991) Density and Specific Gravity (Relative Density) of Plastics by Displacement
ASTM D 4280	(1996) Extended Life Type, Nonplowable, Prismatic, Raised, Retroreflective Pavement Markers
ASTM E 28	(1997) Softening Point of Resins by Ring and Ball Apparatus

FEDERAL SPECIFICATIONS (FS)

FS TT-B-1325	(Rev C; Notice 1) Beads (Glass Spheres) Retro-Reflective (Metric)
FS TT-P-1952	(Rev D) Paint, Traffic and Airfield Marking, Waterborne (Metric)

1.1 SUBMITTALS

Government approval is required for submittals with a "GA" designation; submittals having an "FIO" designation are for information only. The following shall be submitted in accordance with SECTION 01330 SUBMITTAL PROCEDURES:

SD-01 Data

Equipment Lists; GA.

Lists of proposed equipment, including descriptive data, and notifications of proposed Contractor actions as specified in this section. List of removal equipment shall include descriptive data indicating area of

coverage per pass, pressure adjustment range, tank and flow capacities, and safety precautions required for the equipment operation.

SD-06 Instructions

Mixing, Thinning and Application; FIO.

Manufacturer's current printed product description and Material Safety Data Sheets (MSDS) for each type paint/color proposed for use.

SD-08 Statements

Qualifications; FIO.

Document certifying that personnel are qualified for equipment operation and handling of chemicals.

SD-09 Reports

Material Tests; FIO.

Certified copies of the test reports, prior to the use of the materials at the jobsite. Testing shall be performed in an approved independent laboratory.

SD-13 Certificates

Volatile Organic Compound (VOC) Content; FIO.

Certificate stating that the proposed pavement marking paint meets the VOC regulations of the local Air Pollution Control District having jurisdiction over the geographical area in which the project is located.

1.3 DELIVERY AND STORAGE

All materials shall be delivered and stored in sealed containers that plainly show the designated name, formula or specification number, batch number, color, date of manufacture, manufacturer's name, and directions, all of which shall be plainly legible at time of use.

1.4 EQUIPMENT

All machines, tools and equipment used in the performance of the work shall be approved and maintained in satisfactory operating condition. Equipment operating on roads shall display low speed traffic markings and traffic warning lights.

1.4.1 Paint Application Equipment

The equipment to apply paint to pavements shall be a self-propelled or mobile-drawn pneumatic spraying machine with suitable arrangements of atomizing nozzles and controls to obtain the specified results. The machine shall have a speed during application not less than 8 kilometers per hour, and shall be capable of applying the stripe widths indicated, at the paint coverage rate specified in paragraph APPLICATION, and of even uniform thickness with clear-cut edges. The paint applicator shall have

paint reservoirs or tanks of sufficient capacity and suitable gauges to apply paint in accordance with requirements specified. Tanks shall be equipped with suitable air-driven mechanical agitators. The spray mechanism shall be equipped with quick-action valves conveniently located, and shall include necessary pressure regulators and gauges in full view and reach of the operator. Paint strainers shall be installed in paint supply lines to ensure freedom from residue and foreign matter that may cause malfunction of the spray guns. The paint applicator shall be readily adaptable for attachment of an air-actuated dispenser for the reflective media approved for use. Pneumatic spray guns shall be provided for hand application of paint in areas where the mobile paint applicator cannot be used.

1.4.2 Surface Preparation Equipment

1.4.2.1 Sandblasting Equipment

Sandblasting equipment shall include an air compressor, hoses, and nozzles of proper size and capacity as required for cleaning surfaces to be painted. The compressor shall be capable of furnishing not less than 70.8 liters per sec (150 cfm) of air at a pressure of not less than 620 kPa (90 psi) at each nozzle used, and shall be equipped with traps that will maintain the compressed air free of oil and water.

1.4.2.2 Waterblast Equipment

The water pressure shall be specified at 17.9 MPa (2600 psi) at 60 degrees C (140 degrees F in order to adequately clean the surfaces to be marked.

1.4.3 Traffic Controls

Suitable warning signs shall be placed near the beginning of the worksite and well ahead of the worksite for alerting approaching traffic from both directions. Small markers shall be placed along newly painted lines or freshly placed raised markers to control traffic and prevent damage to newly painted surfaces or displacement of raised pavement markers. Painting equipment shall be marked with large warning signs indicating slow-moving painting equipment in operation.

1.5 HAND-OPERATED, PUSH-TYPE MACHINES

All machines, tools, and equipment used in performance of the work shall be approved and maintained in satisfactory operating condition. Hand-operated push-type machines of a type commonly used for application of paint to pavement surfaces will be acceptable for marking small streets and parking areas. Applicator machine shall be equipped with the necessary paint tanks and spraying nozzles, and shall be capable of applying paint uniformly at coverage specified. Sandblasting equipment shall be provided as required for cleaning surfaces to be painted. Hand-operated spray guns shall be provided for use in areas where push-type machines cannot be used.

1.6 MAINTENANCE OF TRAFFIC

When traffic must be rerouted or controlled to accomplish the work, the necessary warning signs, flagpersons, and related equipment for the safe passage of vehicles shall be provided.

1.7 WEATHER LIMITATIONS FOR REMOVAL

Pavement surface shall be free of snow, ice, or slush. Surface temperature shall be at least 5 degrees C and rising at the beginning of operations, except those involving shot or sand blasting. Operation shall cease during thunderstorms. Operation shall cease during rainfall, except for waterblasting and removal of previously applied chemicals. Waterblasting shall cease where surface water accumulation alters the effectiveness of material removal.

PART 2 PRODUCTS

2.1 PAINT

The paint shall be homogeneous, easily stirred to smooth consistency, and shall show no hard settlement or other objectionable characteristics during a storage period of 6 months. Paints for parking lots and streets shall conform to FS TT-P-1952, color as indicated. Pavement marking paints shall comply with applicable state and local laws enacted to ensure compliance with Federal Clean Air Standards. Paint materials shall conform to the restrictions of the local Air Pollution Control District.

2.2 SAMPLING AND TESTING

Materials proposed for use shall be stored on the project site in sealed and labeled containers, or segregated at source of supply, sufficiently in advance of needs to allow 60 days for testing. Upon notification by the Contractor that the material is at the site or source of supply, a sample shall be taken by random selection from sealed containers by the Contractor in the presence of a representative of the Contracting Officer. Samples shall be clearly identified by designated name, specification number, batch number, manufacturer's formulation number, project contract number, intended use, and quantity involved. Testing shall be performed in an approved independent laboratory. If materials are approved based on reports furnished by the Contractor, samples will be retained by the Government for possible future testing should the material appear defective during or after application.

PART 3 EXECUTION

3.1 SURFACE PREPARATION

Surfaces to be marked shall be thoroughly cleaned before application of the pavement marking material. Dust, dirt, and other granular surface deposits shall be removed by sweeping, blowing with compressed air, rinsing with water or a combination of these methods as required. Rubber deposits, surface laitance, existing paint markings, and other coatings adhering to the pavement shall be completely removed with scrapers, wire brushes, sandblasting, approved chemicals, or mechanical abrasion as directed. Areas of old pavement affected with oil or grease shall be scrubbed with several applications of trisodium phosphate solution or other approved detergent or degreaser, and rinsed thoroughly after each application. After cleaning, oil-soaked areas shall be sealed with cut shellac to prevent bleeding through the new paint. Pavement surfaces shall be allowed to dry, when water is used for cleaning, prior to striping or marking. Surfaces shall be recleaned, when work has been stopped due to rain.

3.1.1 Cleaning Existing Pavement Markings

In general, markings shall not be placed over existing pavement marking patterns. Whenever grinding, scraping, sandblasting or other operations are performed the work must be conducted in such a manner

that the finished pavement surface is not damaged or left in a pattern that is misleading or confusing. When these operations are completed the pavement surface shall be blown off with compressed air to remove residue and debris resulting from the cleaning work.

3.2 APPLICATION

All pavement markings and patterns shall be placed as shown on the plans.

3.2.1 Paint

Paint shall be applied to clean, dry surfaces, and only when air and pavement temperatures are above 5 degrees C and less than 35 degrees C. Paint temperature shall be maintained within these same limits. New asphalt pavement surfaces shall be allowed to cure for a period of not less than 30 days before applications of paint. Paint shall be applied pneumatically with approved equipment at rate of coverage specified. The Contractor shall provide guidelines and templates as necessary to control paint application. Special precautions shall be taken in marking numbers, letters, and symbols. Edges of markings shall be sharply outlined.

3.2.1.1 Rate of Application

Nonreflective Markings: Paint shall be applied evenly to the pavement surface to be coated at a rate of 2.9 plus or minus 0.5 square meter per liter.

3.2.1.2 Drying

The maximum drying time requirements of the paint specifications will be strictly enforced to prevent undue softening of bitumen, and pickup, displacement, or discoloration by tires of traffic. If there is a delay in drying of the markings, painting operations shall be discontinued until cause of the slow drying is determined and corrected.

3.3 MARKING REMOVAL

Pavement marking, including plastic tape, shall be removed in the areas shown on the drawings. Removal of marking shall be as complete as possible without damage to the surface. Aggregate shall not be exposed by the removal process. After the markings are removed, the cleaned pavement surfaces shall exhibit adequate texture for remarking as specified in paragraph SURFACE PREPARATION. Contractor shall demonstrate removal of pavement marking in an area designated by the Contracting Officer. The demonstration area will become the standard for the remainder of the work.

3.3.1 Equipment Operation

Equipment shall be controlled and operated to remove markings from the pavement surface, prevent dilution or removal of binder from underlying pavement, and prevent emission of blue smoke from asphalt or tar surfaces.

3.3.2 Cleanup and Waste Disposal

The worksite shall be kept clean of debris and waste from the removal operations. Cleanup shall immediately follow removal operations in areas subject to air traffic. Debris shall be disposed of at approved sites.

END OF SECTION

SECTION 02770

CONCRETE SIDEWALKS, DUMPSTER PADS, AND EQUIPMENT PADS AND CURBS AND GUTTERS

PART 1 GENERAL

1.1 REFERENCES

The publications listed below form a part of this specification to the extent referenced. The publications are referred to in the text by basic designation only.

AMERICAN ASSOCIATION OF STATE HIGHWAY AND TRANSPORTATION OFFICIALS (AASHTO)

AASHTO M 182	(1991) Burlap Cloth Made from Jute or Kenaf

AMERICAN SOCIETY FOR TESTING AND MATERIALS (ASTM)

ASTM A 185	(1994) Steel Welded Wire Fabric, Plain, for Concrete Reinforcement
ASTM A 615/A 615M	(1996a) Deformed and Plain Billet-Steel Bars for Concrete Reinforcement
ASTM A 616/A 616M	(1996) Rail-Steel Deformed and Plain Bars for Concrete Reinforcement
ASTM A 617/A 617M	(1996a) Axle-Steel Deformed and Plain Bars for Concrete Reinforcement
ASTM C 31/C 31M	(1996) Making and Curing Concrete Test Specimens in the Field
ASTM C 143	(1990a) Slump of Hydraulic Cement Concrete
ASTM C 171	(1997) Sheet Materials for Curing Concrete
ASTM C 172	(1990) Sampling Freshly Mixed Concrete
ASTM C 173	(1996) Air Content of Freshly Mixed Concrete by the Volumetric Method
ASTM C 231	(1997) Air Content of Freshly Mixed Concrete by the Pressure Method

ASTM C 309	(1997) Liquid Membrane-Forming Compounds for Curing Concrete
ASTM D 1751	(1983; R 1991) Preformed Expansion Joint Filler for Concrete Paving and Structural Construction (Nonextruding and Resilient Bituminous Types)
ASTM D 1752	(1984; R 1996) Preformed Sponge Rubber and Cork Expansion Joint Fillers for Concrete Paving and Structural Construction
ASTM D 3405	(1996) Joint Sealants, Hot-Applied, for Concrete and Asphalt Pavements

CORPS OF ENGINEERS (COE)

COE CRD-C 527	(1988) Standard Specification for Joint Sealants, Cold-Applied, Non-Jet-Fuel-Resistant, for Rigid and Flexible Pavements

1.2 MEASUREMENT FOR PAYMENT (NOT APPLICABLE)

1.3 BASIS FOR PAYMENT (NOT APPLICABLE)

1.4 SUBMITTALS

Government approval is required for submittals with a "GA" designation; submittals having an "FIO" designation are for information only. The following shall be submitted in accordance with SECTION 01330 SUBMITTAL PROCEDURES:

SD-09 Reports

Field Quality Control; GA.

Copies of all test reports within 24 hours of completion of the test.

SD-18 Records

Concrete; GA.

Copies of certified delivery tickets for all concrete used in the construction.

1.5 WEATHER LIMITATIONS

1.5.1 Placing During Cold Weather

Concrete placement shall be discontinued when the air temperature reaches 5 degrees C and is falling. Placement may begin when the air temperature reaches 2 degrees C and is rising. Provisions shall be made to protect the concrete from freezing during the specified curing period. If necessary to place

concrete when the temperature of the air, aggregates, or water is below 2 degrees C, placement shall be approved in writing. Approval will be contingent upon full conformance with the following provisions. The underlying material shall be prepared and protected so that it is entirely free of frost when the concrete is deposited. Mixing water and aggregates shall be heated as necessary to result in the temperature of the in-place concrete being between 10 and 30 degrees C. Methods and equipment for heating shall be approved. The aggregates shall be free of ice, snow, and frozen lumps before entering the mixer. Covering and other means shall be provided for maintaining the concrete at a temperature of at least 10 degrees C for not less than 72 hours after placing, and at a temperature above freezing for the remainder of the curing period.

1.5.2 Placing During Warm Weather

The temperature of the concrete as placed shall not exceed 30 degrees C except where an approved retarder is used. The mixing water and/or aggregates shall be cooled, if necessary, to maintain a satisfactory placing temperature. The placing temperature shall not exceed 35 degrees C.

1.6 PLANT, EQUIPMENT, MACHINES, AND TOOLS

1.6.1 General Requirements

Plant, equipment, machines, and tools used in the work shall be subject to approval and shall be maintained in a satisfactory working condition at all times. The equipment shall have the capability of producing the required product, meeting grade controls, thickness control and smoothness requirements as specified. Use of the equipment shall be discontinued if it produces unsatisfactory results. The Contracting Officer shall have access at all times to the plant and equipment to ensure proper operation and compliance with specifications.

1.6.2 Slip Form Equipment

Slip form paver or curb forming machine, will be approved based on trial use on the job and shall be self-propelled, automatically controlled, crawler mounted, and capable of spreading, consolidating, and shaping the plastic concrete to the desired cross section in 1 pass.

PART 2 PRODUCTS

2.1 CONCRETE

Concrete shall conform to the applicable requirements of SECTION 03300 CAST-IN-PLACE STRUCTURAL CONCRETE except as otherwise specified. Concrete shall have a minimum compressive strength of 24 MPa at 28 days. Maximum size of aggregate shall be 37.5 mm.

2.1.1 Air Content

Mixtures shall have air content by volume of concrete of 5 to 7 percent, based on measurements made immediately after discharge from the mixer.

2.1.2 Slump

The concrete slump shall be 50 mm plus or minus 25 mm for hand placed concrete or 25 mm plus or minus 10 mm for slipformed concrete where determined in accordance with ASTM C 143.

2.1.3 Reinforcement Steel

Reinforcement requirements shall be as shown on the plans. Reinforcement bars shall conform to ASTM A 615/A 615M, ASTM A 616/A 616M, or ASTM A 617/A 617M. Wire mesh reinforcement shall conform to ASTM A 185.

2.2 CONCRETE CURING MATERIALS

2.2.1 Impervious Sheet Materials

Impervious sheet materials shall conform to ASTM C 171, type optional, except that polyethylene film, if used, shall be white opaque.

2.2.2 Burlap

Burlap shall conform to AASHTO M 182.

2.2.3 White Pigmented Membrane-Forming Curing Compound

White pigmented membrane-forming curing compound shall conform to ASTM C 309, Type 2.

2.3 CONCRETE PROTECTION MATERIALS

Concrete protection materials shall be a linseed oil mixture of equal parts, by volume, of linseed oil and either mineral spirits, naphtha, or turpentine. At the option of the contractor, commercially prepared linseed oil mixtures, formulated specifically for application to concrete to provide protection against the action of deicing chemicals may be used, except that emulsified mixtures are not acceptable.

2.4 JOINT FILLER STRIPS

2.4.1 Contraction Joint Filler for Curb and Gutter

Contraction joint filler for curb and gutter shall consist of hard-pressed fiberboard.

2.4.2 Expansion Joint Filler, Premolded

Expansion joint filler, premolded, shall conform to ASTM D 1751 or ASTM D 1752, 9.5 mm thick, unless otherwise indicated.

2.5 JOINT SEALANTS

2.5.1 Joint Sealant, Cold-Applied

Joint sealant, cold-applied shall conform to COE CRD-C 527.

2.5.2 Joint Sealant, Hot-Poured

Joint sealant, hot-poured shall conform to ASTM D 3405.

2.6 FORM WORK

Form work shall be designed and constructed to ensure that the finished concrete will conform accurately to the indicated dimensions, lines, and elevations, and within the tolerances specified. Forms shall be of wood or steel, straight, of sufficient strength to resist springing during depositing and consolidating concrete. Wood forms shall be surfaced plank, 50 mm nominal thickness, straight and free from warp, twist, loose knots, splits or other defects. Wood forms shall have a nominal length of 3 meters. Radius bends may be formed with 19 mm boards, laminated to the required thickness. Steel forms shall be channel-formed sections with a flat top surface and with welded braces at each end and at not less than two intermediate points. Ends of steel forms shall be interlocking and self-aligning. Steel forms shall include flexible forms for radius forming, corner forms, form spreaders, and fillers. Steel forms shall have a nominal length of 3 meters with a minimum of 2 welded stake pockets per form. Stake pins shall be solid steel rods with chamfered heads and pointed tips designed for use with steel forms.

2.6.1 Sidewalk, Dumpster Pads, and Equipement Pads Forms

Forms shall be of a height equal to the full depth of the finished sidewalk, dumpster pad, or equipment pad.

2.6.2 Curb and Gutter Forms

Curb and gutter outside forms shall have a height equal to the full depth of the curb or gutter. The inside form of curb shall have batter as indicated and shall be securely fastened to and supported by the outside form. Rigid forms shall be provided for curb returns, except that benders or thin plank forms may be used for curb or curb returns with a radius of 3 meters or more, where grade changes occur in the return, or where the central angle is such that a rigid form with a central angle of 90 degrees cannot be used. Back forms for curb returns may be made of 38 mm benders, for the full height of the curb, cleated together.

PART 3 EXECUTION

3.1 SUBGRADE PREPARATION

The subgrade shall be constructed to the specified grade and cross section prior to concrete placement. Subgrade shall be placed and compacted in conformance with SECTION 02300: EARTHWORK.

3.1.1 Sidewalk, Dumpster Pad, Equipment Pad Subgrade

The subgrade shall be tested for grade and cross section with a template extending the full width of the sidewalk, dumpster pad, or equipment pad and supported between side forms.

3.1.2 Curb and Gutter Subgrade

The subgrade shall be tested for grade and cross section by means of a template extending the full width of the curb and gutter. The subgrade shall be of materials equal in bearing quality to the subgrade under the adjacent pavement.

3.1.3 Maintenance of Subgrade

The subgrade shall be maintained in a smooth, compacted condition in conformity with the required section and established grade until the concrete is placed. The subgrade shall be in a moist condition when concrete is placed. The subgrade shall be prepared and protected to produce a subgrade free from frost when the concrete is deposited.

3.2 FORM SETTING

Forms shall be set to the indicated alignment, grade and dimensions. Forms shall be held rigidly in place by a minimum of 3 stakes per form placed at intervals not to exceed 1.2 meters. Corners, deep sections, and radius bends shall have additional stakes and braces, as required. Clamps, spreaders, and braces shall be used where required to ensure rigidity in the forms. Forms shall be removed without injuring the concrete. Bars or heavy tools shall not be used against the concrete in removing the forms. Any concrete found defective after form removal shall be promptly and satisfactorily repaired. Forms shall be cleaned and coated with form oil each time before concrete is placed. Wood forms may, instead, be thoroughly wetted with water before concrete is placed, except that with probable freezing temperatures, oiling is mandatory.

3.2.1 Sidewalks, Dumpster Pads, and Equipment Pads

Forms shall be set with the upper edge true to line and grade with an allowable tolerance of 3 mm in any 3 meter long section. After forms are set, grade and alignment shall be checked with a 3.05 meter straightedge. Forms shall have a transverse slope as indicated with the low side adjacent to the roadway. Side forms shall not be removed for 12 hours after finishing has been completed.

3.2.2 Curbs and Gutters

The forms of the front of the curb shall be removed not less than 2 hours nor more than 6 hours after the concrete has been placed. Forms back of curb shall remain in place until the face and top of the curb have been finished, as specified for concrete finishing. Gutter forms shall not be removed while the concrete is sufficiently plastic to slump in any direction.

3.3 SIDEWALK, DUMPSTER PADS, EQUIPMENT PADS CONCRETE PLACEMENT AND FINISHING

3.3.1 Formed Sidewalks, Dumpster Pads, and Equipment Pads

Concrete shall be placed in the forms in one layer. When consolidated and finished, the sidewalks, dumpster pads, and equipment pads shall be of the thickness indicated. After concrete has been placed in the forms, a strike-off guided by side forms shall be used to bring the surface to proper section to be compacted. The concrete shall be consolidated with an approved vibrator, and the surface shall be finished to grade with a wood float, bull float, or darby, edged and broom finished.

3.3.1.1 Reinforcement Steel Placement For Dumpster Pads and Equipment Pads.

Reinforcement steel shall be as shown on the plans. Reinforcement steel shall be accurately and securely fastened in place with suitable supports and ties before the concrete is placed.

3.3.2 Concrete Finishing

After straightedging, when most of the water sheen has disappeared, and just before the concrete hardens, the surface shall be finished to a smooth and uniformly fine granular or sandy texture free of waves, irregularities, or tool marks. A scored surface shall be produced by brooming with a fiber-bristle brush in a direction transverse to that of the traffic.

3.3.3 Edge and Joint Finishing

All slab edges, including those at formed joints, shall be finished with an edger having a radius of 3 mm. Transverse joint shall be edged before brooming, and the brooming shall eliminate the flat surface left by the surface face of the edger. Corners and edges which have crumbled and areas which lack sufficient mortar for proper finishing shall be cleaned and filled solidly with a properly proportioned mortar mixture and then finished.

3.3.4 Surface and Thickness Tolerances

Finished surfaces shall not vary more than 7.9 mm from the testing edge of a 3.05 meter straightedge. Permissible deficiency in section thickness will be up to 6.5 mm.

3.4 CURB AND GUTTER CONCRETE PLACEMENT AND FINISHING

3.4.1 Formed Curb and Gutter

Concrete shall be placed to the section required in a single lift. Consolidation shall be achieved by using approved mechanical vibrators. Curve shaped gutters shall be finished with a standard curb "mule".

3.4.2 Curb and Gutter Finishing

Approved slipformed curb and gutter machines may be used in lieu of hand placement.

3.4.3 Concrete Finishing

Exposed surfaces shall be floated and finished with a smooth wood float until true to grade and section and uniform in texture. Floated surfaces shall then be brushed with a fine-hair brush with longitudinal strokes. The edges of the gutter and top of the curb shall be rounded with an edging tool to a radius of 13 mm. Immediately after removing the front curb form, the face of the curb shall be rubbed with a wood or concrete rubbing block and water until blemishes, form marks, and tool marks have been removed. The front curb surface, while still wet, shall be brushed in the same manner as the gutter and curb top. The top surface of gutter and entrance shall be finished to grade with a wood float.

3.4.4 Joint Finishing

Curb edges at formed joints shall be finished as indicated.

3.4.5 Surface and Thickness Tolerances

Finished surfaces shall not vary more than 6.5 mm from the testing edge of a 3.05 meter straightedge. Permissible deficiency in section thickness will be up to 6.5 mm.

3.5 SIDEWALK JOINTS

Sidewalk joints shall be constructed to divide the surface into rectangular areas. Transverse contraction joints shall be spaced at a distance equal to the sidewalk width or 1.5 meters on centers, whichever is less, and shall be continuous across the slab. Longitudinal contraction joints shall be constructed along the centerline of all sidewalks 3 meters or more in width. Transverse expansion joints shall be installed at sidewalk returns and opposite expansion joints in adjoining curbs. Where the sidewalk is not in contact with the curb, transverse expansion joints shall be installed as indicated. Expansion joints shall be formed about structures and features which project through or into the sidewalk pavement, using joint filler of the type, thickness, and width indicated.

3.5.1 Sidewalk Contraction Joints

The contraction joints shall be formed in the fresh concrete by cutting a groove in the top portion of the slab to a depth of at least one-fourth of the sidewalk slab thickness, using a jointer to cut the groove, or by sawing a groove in the hardened concrete with a power-driven saw, unless otherwise approved. Sawed joints shall be constructed by sawing a groove in the concrete with a 3 mm blade to the depth indicated. An ample supply of saw blades shall be available on the job before concrete placement is started, and at least one standby sawing unit in good working order shall be available at the jobsite at all times during the sawing operations.

3.5.2 Sidewalk Expansion Joints

Expansion joints shall be formed with joint filler strips as shown. Joint filler shall be placed with top edge 6 mm below the surface and shall be held in place with steel pins or other devices to prevent warping of the filler during floating and finishing. Immediately after finishing operations are completed, joint edges shall be rounded with an edging tool having a radius of 3 mm, and concrete over the joint filler shall be removed. At the end of the curing period, expansion joints shall be cleaned and filled with joint sealer. The joint opening shall be thoroughly cleaned before the sealing material is placed. Sealing material shall not be spilled on exposed surfaces of the concrete. Concrete at the joint shall be surface dry and atmospheric and concrete temperatures shall be above 10 degrees C at the time of application of joint sealing material. Excess material on exposed surfaces of the concrete shall be removed immediately and concrete surfaces cleaned.

3.6 CURB AND GUTTER JOINTS

Curb and gutter joints shall be constructed at right angles to the line of curb and gutter.

3.6.1 Contraction Joints

Contraction joints shall be constructed directly opposite contraction joints in abutting portland cement concrete pavements and spaced so that monolithic sections between curb returns will not be less than 1.5 meter nor greater than 4.5 meter in length. Contraction joints shall be constructed by means of 3 mm thick separators and of a section conforming to the cross section of the curb and gutter. Separators shall be removed as soon as practicable after concrete has set sufficiently to preserve the width and shape of the joint and prior to finishing.

3.6.2 Expansion Joints

Expansion joints shall be formed by means of preformed expansion joint filler material cut and shaped to the cross section of curb and gutter. Expansion joints shall be provided in curb and gutter directly opposite expansion joints of abutting portland cement concrete pavement, and shall be of the same type and thickness as joints in the pavement. Where curb and gutter do not abut portland cement concrete pavement, expansion joints at least 9.5 mm in width shall be provided at intervals not less than 10 meters nor greater than 35 meters. Expansion joints shall be provided in nonreinforced concrete gutter at locations indicated. Expansion joints shall be sealed immediately following curing of the concrete or as soon thereafter as weather conditions permit. Expansion joints and the top 1 inch depth of curb and gutter contraction-joints shall be sealed with joint sealer. The joint opening shall be thoroughly cleaned before the sealing material is placed. Sealing material shall not be spilled on exposed surfaces of the concrete. Concrete at the joint shall be surface dry and atmospheric and concrete temperatures shall be above 10 degrees C at the time of application of joint sealing material. Excess material on exposed surfaces of the concrete shall be removed immediately and concrete surfaces cleaned.

3.7 CURING AND PROTECTION

3.7.1 General Requirements

Concrete shall be protected against loss of moisture and rapid temperature changes for at least 7 days from the beginning of the curing operation. Unhardened concrete shall be protected from rain and flowing water. All equipment needed for adequate curing and protection of the concrete shall be on hand and ready for use before actual concrete placement begins. Protection shall be provided as necessary to prevent cracking of the pavement due to temperature changes during the curing period.

3.7.1.1 Mat Method

The entire exposed surface shall be covered with 2 or more layers of burlap. Mats shall overlap each other at least 150 mm. The mat shall be thoroughly wetted with water prior to placing on concrete surface and shall be kept continuously in a saturated condition and in intimate contact with concrete for not less than 7 days.

3.7.1.2 Impervious Sheeting Method

The entire exposed surface shall be wetted with a fine spray of water and then covered with impervious sheeting material. Sheets shall be laid directly on the concrete surface with the light-colored side up and overlapped 300 mm when a continuous sheet is not used. The curing medium shall not be less than 450 mm wider than the concrete surface to be cured, and shall be securely weighted down by heavy wood planks, or a bank of moist earth placed along edges and laps in the sheets. Sheets shall be satisfactorily

repaired or replaced if torn or otherwise damaged during curing. The curing medium shall remain on the concrete surface to be cured for not less than 7 days.

3.7.1.3 Membrane Curing Method

A uniform coating of white-pigmented membrane-curing compound shall be applied to the entire exposed surface of the concrete as soon after finishing as the free water has disappeared from the finished surface. Formed surfaces shall be coated immediately after the forms are removed and in no case longer than 1 hour after the removal of forms. Concrete shall not be allowed to dry before the application of the membrane. If any drying has occurred, the surface of the concrete shall be moistened with a fine spray of water and the curing compound applied as soon as the free water disappears. Curing compound shall be applied in two coats by hand-operated pressure sprayers at a coverage of approximately 5 square meters per liter for both coats. The second coat shall be applied in a direction approximately at right angles to the direction of application of the first coat. The compound shall form a uniform, continuous, coherent film that will not check, crack, or peel and shall be free from pinholes or other imperfections. If pinholes, abrasion, or other discontinuities exist, an additional coat shall be applied to the affected areas within 30 minutes. Concrete surfaces that are subjected to heavy rainfall within 3 hours after the curing compound has been applied shall be resprayed by the method and at the coverage specified above. Areas where the curing compound is damaged by subsequent construction operations within the curing period shall be resprayed. Necessary precautions shall be taken to insure that the concrete is properly cured at sawed joints, and that no curing compound enters the joints. The top of the joint opening and the joint groove at exposed edges shall be tightly sealed before the concrete in the region of the joint is resprayed with curing compound. The method used for sealing the joint groove shall prevent loss of moisture from the joint during the entire specified curing period. Approved standby facilities for curing concrete pavement shall be provided at a location accessible to the jobsite for use in the event of mechanical failure of the spraying equipment or other conditions that might prevent correct application of the membrane-curing compound at the proper time. Concrete surfaces to which membrane-curing compounds have been applied shall be adequately protected during the entire curing period from pedestrian and vehicular traffic, except as required for joint-sawing operations and surface tests, and from any other possible damage to the continuity of the membrane.

3.7.2 Backfilling

After curing, debris shall be removed and the area adjoining the concrete shall be backfilled, graded, and compacted to conform to the surrounding area in accordance with lines and grades indicated.

3.7.3 Protection

Completed concrete shall be protected from damage until accepted. The Contractor shall repair damaged concrete and clean concrete discolored during construction. Concrete that is damaged shall be removed and reconstructed for the entire length between regularly scheduled joints. Refinishing the damaged portion will not be acceptable. Removed damaged portions shall be disposed of as directed.

3.8 FIELD QUALITY CONTROL

3.8.1 General Requirements

The Contractor shall perform the inspection and tests described and meet the specified requirements for inspection details and frequency of testing. Based upon the results of these inspections and tests, the

Contractor shall take the action and submit reports as required below, and any additional tests to insure that the requirements of these specifications are met.

3.8.2 Concrete Testing

3.8.2.1 Strength Testing

The Contractor shall provide molded concrete specimens for strength tests. Samples of concrete placed each day shall be taken not less than once a day nor less than once for every 190 cubic meters of concrete. The samples for strength tests shall be taken in accordance with ASTM C 172. Cylinders for acceptance shall be molded in conformance with ASTM C 31/C 31M by an approved testing laboratory. Each strength test result shall be the average of 2 test cylinders from the same concrete sample tested at 28 days, unless otherwise specified or approved. Concrete specified on the basis of compressive strength will be considered satisfactory if the averages of all sets of three consecutive strength test results equal or exceed the specified strength, and no individual strength test result falls below the specified strength by more than 4 MPa.

3.8.2.2 Air Content

Air content shall be determined in accordance with ASTM C 173 or ASTM C 231. ASTM C 231 shall be used with concretes and mortars made with relatively dense natural aggregates. Two tests for air content shall be made on randomly selected batches of each class of concrete placed during each shift. Additional tests shall be made when excessive variation in concrete workability is reported by the placing foreman or the Government inspector. If results are out of tolerance, the placing foreman shall be notified and he shall take appropriate action to have the air content corrected at the plant. Additional tests for air content will be performed on each truckload of material until such time as the air content is within the tolerance specified.

3.8.2.3 Slump Test

Two slump tests shall be made on randomly selected batches of each class of concrete for every 190 cubic meters, or fraction thereof, of concrete placed during each shift. Additional tests shall be performed when excessive variation in the workability of the concrete is noted or when excessive crumbling or slumping is noted along the edges of slip-formed concrete.

3.8.3 Thickness Evaluation

The anticipated thickness of the concrete shall be determined prior to placement by passing a template through the formed section or by measuring the depth of opening of the extrusion template of the curb forming machine. If a slip form paver is used for sidewalk placement, the subgrade shall be true to grade prior to concrete placement and the thickness will be determined by measuring each edge of the completed slab.

3.8.4 Surface Evaluation

The finished surface of each category of the completed work shall be uniform in color and free of blemishes and form or tool marks.

3.9 SURFACE DEFICIENCIES AND CORRECTIONS

3.9.1 Thickness Deficiency

When measurements indicate that the completed concrete section is deficient in thickness by more than 6 mm the deficient section will be removed, between regularly scheduled joints, and replaced.

3.9.2 High Areas

In areas not meeting surface smoothness and plan grade requirements, high areas shall be reduced either by rubbing the freshly finished concrete with carborundum brick and water when the concrete is less than 36 hours old or by grinding the hardened concrete with an approved surface grinding machine after the concrete is 36 hours old or more. The area corrected by grinding the surface of the hardened concrete shall not exceed 5 percent of the area of any integral slab, and the depth of grinding shall not exceed 6 mm. Pavement areas requiring grade or surface smoothness corrections in excess of the limits specified above shall be removed and replaced.

3.9.3 Appearance

Exposed surfaces of the finished work will be inspected by the Government and any deficiencies in appearance will be identified. Areas which exhibit excessive cracking, discoloration, form marks, or tool marks or which are otherwise inconsistent with the overall appearances of the work shall be removed and replaced.

END OF SECTION

SECTION 02780

CONCRETE BLOCK PAVEMENTS

PART 1 GENERAL

1.1 REFERENCES

The publications listed below form a part of this specification to the extent referenced. The publications are referred to in the text by basic designation only.

ACI INTERNATIONAL (ACI)

ACI 301	(1996) Standard Specification for Structural Concrete for Buildings

AMERICAN SOCIETY FOR TESTING AND MATERIALS (ASTM)

ASTM C 67	(1996) Sampling and Testing Brick and Structural Clay Tile
ASTM C 117	(1995) Materials Finer Than 75 micrometer (No. 200) Sieve in Mineral Aggregates by Washing
ASTM C 131	(1996) Resistance to Degradation of Small-Size Coarse Aggregate by Abrasion and Impact in the Los Angeles Machine
ASTM C 136	(1996a) Sieve Analysis of Fine and Coarse Aggregates
ASTM C 936	(1996) Solid Concrete Interlocking Paving Units
ASTM C 979	(1982; R 1993) Pigments for Integrally Colored Concrete
ASTM D 75	(1987; R 1992) Sampling Aggregates
ASTM D 1760	(1996) Pressure Treatment of Timber Products
ASTM D 4318	(1995a) Liquid Limit, Plastic Limit, and Plasticity Index of Soils
ASTM E 11	(1995) Wire-Cloth Sieves for Testing Purposes

1.2 SUBMITTALS

Government approval is required for submittals with a "GA" designation; submittals having an "FIO" designation are for information only. The following shall be submitted in accordance with Section 01330 SUBMITTAL PROCEDURES:

SD-09 Reports

Tests, Inspections, and Verifications; GA.

A written report within 7 calendar days after completion of the work, covering the testing required for each lot.

SD-14 Samples

Concrete Paving Block; GA.

A sample of five paving blocks prior to the start of the work. Also, a representative sample of not less than 15 blocks as directed by the Contracting Officer, from each lot of 20,000 concrete paving blocks or fraction thereof.

1.3 BASIS FOR PAYMENT (NOT APPLICABLE)

1.4 MAINTENANCE

At the completion of work the Contractor shall provide an additional 10 percent of the total number of paving blocks matching those used in the project. These paving blocks shall be delivered stacked on pallets.

PART 2 PRODUCTS

2.1 MATERIALS

2.1.1 Bedding and Jointing Sand

Two separate sand gradations shall be used for the bedding layer and in the block joints. Both sand gradations shall consist of crushed sand, natural sand, or a combination of crushed and natural sand. Both sand gradations shall have a minimum L.A. Abrasion of 40 percent when tested in accordance with ASTM C 131. Both sand gradations shall be nonplastic when tested in accordance with ASTM D 4318 and shall be free of lumps, clay, vegetation, soft particles, sulphates, and other contaminants. The bedding and jointing sands shall conform to the following gradations, determined in accordance with ASTM C 136 and ASTM C 117, using ASTM E 11 sieve.

Sieve (ASTM E 11)	Percent Passing: Bedding Sand	Percent Passing: Jointing Sand
9.5 mm	100	100
4.75 mm	80-100	100
2.36 mm	60-90	95-100
1.18 mm	25-70	70-100
0.600 mm	10-35	40-75
0.300 mm	5-20	10-40
0.150 mm	0-10	2-25
0.075 mm	0-5	0-10

2.1.2 Concrete Paving Block

The concrete paving block shall conform to ASTM C 936, and shall be as shown on the plans for thickness, color, and shape. Pigmentation shall conform to ASTM C 979.

2.1.3 Edge Restraints

Edge restraints shall be the type as shown on the plans and as specified as follows:

2.1.3.1 Treated Wood

The edge restraint shall be wood treated in accordance with ASTM D 1760 and of dimensions shown on the plans.

2.1.3.2 Precast Concrete

The edge restraint shall be precast portland cement concrete elements with the dimensions shown on the plans. The precast concrete shall have a compressive strength of not less than 21 MPa at 28 days and an entrained air content of 5 to 7 percent.

2.1.3.3 Cast-in-Place Concrete

The edge restraint shall be portland cement concrete placed with the dimensions shown in the plans. Concrete shall conform to the requirements of ACI 301, except that it shall have a compressive strength of not less than 21 Mpa at 28 days and an entrained air content of 5 to 7 percent.

2.2 TESTS, INSPECTIONS AND VERIFICATIONS

2.2.1 Paving Block

The Contractor shall submit manufacturer's certificates which certifies that the paving blocks meet the requirements of ASTM C 936 and the following requirements.

2.2.1.1 Freezing and Thawing

Resistance to freezing and thawing shall be determined in accordance with Section 8 of ASTM C 67. The blocks shall have no breakage and no more than 1.0 percent loss of any individual unit in dry weight when subjected to 50 cycles of freezing and thawing.

2.2.1.2 Dimensional Tolerance

The length and width of each block in the sample shall not vary from any other block in this or any other lot sample by more than 3 mm. Thickness of any block in the sample shall not vary by more than 3 mm from the specified block thickness.

2.2.1.3 Retest

The Contractor shall notify the Contracting Officer if any blocks fail to meet the specified requirements. In case the shipment fails to conform to the specified requirements, the Contractor may sort it, and new specimens shall be selected by the Contractor from the retained lot for approval, as directed by the Contracting Officer. All concrete paving block testing/certifications shall be performed at the expense of the Contractor. In case the second set of specimens fail to conform to the test requirements, the entire lot shall be rejected.

2.2.2 Sand

The gradation of sand shall be as specified and sampled in accordance with ASTM D 75. Gradation of the sand shall be approved by the Contracting Officer.

PART 3 EXECUTION

3.1 PREPARATION

3.1.1 Edge Restraint Location

The edge restraint shall be placed as shown in the drawings and shall be installed prior to placement of the blocks.

3.1.2 Sand Bedding Layer

The bedding sand shall be spread evenly over the area to be paved and shall be screeded to an uncompacted average thickness of 30 mm with a tolerance for grade and surface smoothness of plus or minus 6 mm . This bedding sand shall not be used to fill low areas that exceed the specified tolerance for the base. The sand shall be left uncompacted and shall not be disturbed by any pedestrian or vehicle construction traffic.

3.2 BLOCK PLACEMENT

The paving block shall be placed by hand or machine in the indicated pattern. Placement of paving block shall start from a corner or straight edge and proceed forward over the undisturbed sand bedding layer. The joints, excluding any chamfer between paving blocks, shall be not less than 2 mm or more than 6 mm in width. After seating, the block surface shall be flush or up to 6 mm above the edge restraint.

3.2.1 Unfilled Gaps

Any gaps between paving blocks and any edge restraint, drainage structures, or other members that cannot be filled with a whole block shall be filled with a paving block cut to fit the gap, except that slivers will not be allowed and the minimum size of cut block shall not be less than ½ the block length. Cutting shall be done with a hydraulic splitter, a masonry saw, or other device that accurately leaves a clean, vertical face without spalling. Any remaining gap between the block and adjoining edge restraint or structure greater than 6 mm will not be accepted; adjacent blocks shall be cut or rearranged to prevent this.

3.2.2 Seating Blocks

The blocks shall be seated in the bedding sand by compacting them with a minimum of three passes of a vibratory plate compactor, as specifically approved for seating of the blocks.

3.2.3 Jointing Sand

The jointing sand shall be swept into joints and vibrated with a vibratory plate or vibratory roller compactor. This process shall be continued until sweeping and vibrating have filled all joints with sand and further vibration cannot force additional sand into the joints. The coarser particles of the sand will not enter the joints and will remain on the surface. These particles and any excess sand shall be swept off the pavement.

3.2.4 Timing of Operations

Seating of blocks and placement of jointing sand can be done concurrently with block placement. However, seating of blocks and placement of jointing sand shall not be done within 1.5 m of any unfinished edge of the block pavement that is not supported by the edge restraint.

3.2.5 Final Rolling

The final finished paving block surface shall be rolled with four passes of a vibratory or pneumatic roller with a static weight of not less than 4.5 metric tons .

3.2.6 Construction Traffic

Construction traffic shall not be allowed on the paving block surface until the jointing sand has been placed and vibrated into the joints and all debris and excess sand has been swept off.

3.3 CLEANUP

The Contractor shall sweep the entire pavement surface and remove all excess sand, blocks and debris from the project area.

3.4 SMOOTHNESS AND GRADE TOLERANCES

3.4.1 Smoothness

No portion of the finished pavement surface shall deviate by more than 10 mm from a 3 m metal straightedge placed on the pavement surface.

3.4.2 Block Height

The finished block surface shall be either flush or up to 6 mm higher than all edge restraints or drainage structures.

3.4.3 Grade

The finished pavement shall be within 12 mm of planned grade shown on the plans.

3.4.4 Remedial Action

Any area not meeting the smoothness, block height, or grade tolerance shall be taken up, adjustments made, and the blocks relaid.

END OF SECTION

SECTION 02811

UNDERGROUND SPRINKLER SYSTEMS

1.1 REFERENCES

The publications listed below form a part of this specification to the extent referenced. The publications are referred to in the text by the basic designation only.

AMERICAN SOCIETY FOR TESTING AND MATERIALS (ASTM)

ASTM D 1785	(1996a) Poly(Vinyl Chloride) (PVC) Plastic Pipe, Schedules 40, 80, and 120
ASTM D 2241	(1996a) Poly(Vinyl Chloride) (PVC) Pressure-Rated Pipe (SDR Series)
ASTM D 2287	(1996) Nonrigid Vinyl Chloride Polymer and Copolymer Molding and Extrusion Compounds
ASTM D 2464	(1996a) Threaded Poly(Vinyl Chloride) (PVC) Plastic Pipe Fittings, Schedule 80
ASTM D 2466	(1996a) Poly(Vinyl Chloride) (PVC) Plastic Pipe Fittings, Schedule 40
ASTM D 2564	(1996a) Solvent Cements for Poly(Vinyl Chloride) (PVC) Plastic Piping Systems
ASTM D 2774	(1994) Underground Installation of Thermoplastic Pressure Piping
ASTM D 2855	(1996) Making Solvent-Cemented Joints with Poly(Vinyl Chloride) (PVC) Pipe and Fittings
ASTM D 3261	(1996) Butt Heat Fusion Polyethylene (PE) Plastic Fittings for Polyethylene (PE) Plastic Pipe and Tubing
ASTM F 441	(1995) Chlorinated Poly(Vinyl Chloride) (CPVC) Plastic Pipe, Schedules 40 and 80

AMERICAN SOCIETY OF SANITARY ENGINEERING (ASSE)

ASSE 1013	(1993) Reduced Pressure Principle Backflow Preventers

ASSE 1020	(1974; Rev thru Feb 1989) Pressure Vacuum Breaker Assembly (Recommended for Outdoor Usage)

AMERICAN WATER WORKS ASSOCIATION (AWWA)

AWWA C901	(1996) Polyethylene (PE) Pressure Pipe and Tubing, 1/2 In. Through 3 In., for Water Service

COMMERCIAL ITEM DESCRIPTIONS (CID)

CID A-A-51145	(Rev C) Flux, Soldering, Non-Electronic, Paste & Liquid

FOUNDATION FOR CROSS-CONNECTION CONTROL AND HYDRAULIC RESEARCH (FCCCHR)

FCCCHR-01	(1993) Manual of Cross-Connection Control

MANUFACTURERS STANDARDIZATION SOCIETY OF THE VALVE AND FITTINGS INDUSTRY (MSS)

MSS SP-80	(1997) Bronze Gate, Globe, Angle and Check Valves

NATIONAL ELECTRICAL MANUFACTURERS ASSOCIATION (NEMA)

NEMA ICS 2	(1993) Industrial Control and Systems, Controllers, Contactors, and Overload Relays Rated Not More Than 2,000 Volts AC or 750 Volts DC
NEMA ICS 6	(1993) Industrial Control and Systems, Enclosures

NATIONAL FIRE PROTECTION ASSOCIATION (NFPA)

NFPA 70	(1996; Errata 96-4) National Electrical Code

1.2 PERFORMANCE REQUIREMENTS

The Contractor shall design and construct an automatic irrigation system with a water pressure of 550 kPa at the connection to the backflow prevention device, 240 kPa at the last head in each turf zone, and 103 kPa at the last drip emitter in each shrub/groundcover zone. The Contractor shall test for available pressure and design the system accordingly. The irrigation system shall include pop-up irrigation heads in turf zones and drip irrigation in shrub/groundcover zones. The irrigation system shall be designed by a Certified Irrigation Consultant or a Registered Landscape Architect or Registered Engineer with a minimum of two years experience in commercial irrigation design. The irrigation system shall be designed using commercial grade equipment readily available within 100 miles of the project area. Design of the irrigation system shall ensure the irrigation spray does not contact building walls and windows even in windy conditions. Low angle nozzles are recommended as long as the

water distribution remains consistent. Design system to accommodate for 15 mph winds coming from the southwest. Design system to provide a min. of 38 mm of precipitation per week. Program controller and operation of system to spread total evenly throughout the week. Design location of irrigation heads for head to head coverage.

1.3 SUBMITTALS

Government approval is required for submittals with a "GA" designation; submittals having an "FIO" designation are for information only. The following shall be submitted in accordance with SECTION 01330 SUBMITTAL PROCEDURES:

SD-01 Data

Framed Instructions; FIO.

Labels, signs, and templates of operating instructions that are required to be mounted or installed on or near the product for normal, safe operation.

Field Training ; FIO.

Information describing training to be provided, training aids to be used, samples of training materials to be provided, and schedules and notification of training.

Design Analysis and Calculations; FIO. Spare Parts; FIO.

Design analyses and pressure calculations verifying that system will provide the irrigation requirements. Spare parts data for each different item of material and equipment specified, after approval of the related submittals and not later than the start of the field tests. The data shall include a complete list of parts and supplies, with current unit prices and source of supply.

SD-04 Drawings

Sprinkler System; GA.

Detail drawings for valves, sprinkler heads, backflow preventers, automatic controllers, emitter heads, and water hammer arresters. Drawings shall include a complete list of equipment and materials, and manufacturer's descriptive and technical literature, performance charts and curves, catalog cuts, and installation instructions. Drawings shall also contain complete wiring and schematic diagrams and any other details required to demonstrate that the system has been coordinated and will function as a unit. Drawings shall show proposed system layout, type and number of heads and emitters, zone valves, drain pockets, backflow devices, controllers, and mounting details of controllers. As-built Drawings which provide current factual information showing locations of mains, heads, valves, and controllers including deviations from and amendments to the drawings and changes in the work shall be included.

SD-06 Instructions

Sprinkler System; GA.

Detailed procedures defining the Contractor's provisions for accident prevention, health protection, and other safety precautions for the work to be done.

SD-09 Reports

Field Tests; GA.

Performance test reports, in booklet form, showing all field tests performed to adjust each component; and all field tests performed to prove compliance with the specified performance criteria, upon completion and testing of the installed system. Each test report shall indicate the final position of control valves.

SD-13 Certificates

Sprinkler System; FIO.

The material supplier's or equipment manufacturer's statement that the supplied material or equipment meets specified requirements. Each certificate shall be signed by an official authorized to certify in behalf of material supplier or product manufacturer and shall identify quantity and date or dates of shipment or delivery to which the certificates apply.

SD-19 Operation and Maintenance Manuals

Sprinkler System; FIO.

Six copies of operation and six copies of maintenance manuals for the equipment furnished. One complete set prior to field testing and the remainder upon acceptance. Manuals shall be approved prior to the field training course. Operating manuals shall detail the step-by-step procedures required for system startup, operation, and shutdown. Operating manuals shall include the manufacturer's name, model number, parts list, and brief description of all equipment and their basic operating features. Maintenance manuals shall list routine maintenance procedures, possible breakdowns and repairs, and troubleshooting guides. Maintenance manuals shall include piping and equipment layout, simplified wiring and control diagrams of the system as installed, and system programming schedule.

1.4 DELIVERY AND STORAGE

All equipment delivered and placed in storage shall be protected from the weather; excessive humidity and temperature variation; direct sunlight (in the case of plastic or rubber materials); and dirt, dust, or other contaminants.

1.5 FIELD MEASUREMENTS

The Contractor shall verify all dimensions in the field and shall advise the Contracting Officer of any discrepancy before performing the work.

PART 2 PRODUCTS

2.1 MATERIALS AND EQUIPMENT REQUIREMENTS

2.1.1 STANDARD PRODUCTS

Materials and equipment shall be the standard products of a manufacturer who has produced similar systems which have performed well for a minimum period of 2 years prior to bid opening. Equipment shall be supported by a service organization that is, in the opinion of the Contracting Officer, reasonably convenient to the site.

2.1.2 NAMEPLATES

Each item of equipment shall have the manufacturer's name, address, type or style, model or serial number, and catalog number on a plate secured to the item of equipment.

2.1.3 EXTRA STOCK

The following extra stock shall be provided: Two sprinkler heads of each size and type, two valve keys for operating manual valves, two wrenches for removing and installing each type of head, two quick coupler keys and hose swivels, and four irrigation controller housing keys.

2.2 PIPING MATERIALS

2.2.4 POLYVINYL CHLORIDE (PVC) PIPE, FITTINGS AND SOLVENT CEMENT

2.2.4.1 PVC Pipe

Pipe shall conform to the requirements of ASTM D 1785, PVC 1120 Schedule 40; or ASTM D 2241, PVC 1120 SDR 21, Class 200.

2.2.4.2 PVC Fittings

Solvent welded socket type fittings shall conform to requirements of ASTM D 2466, Schedule 40. Threaded type fittings shall conform to requirements of ASTM D 2464, Schedule 80.

2.2.4.3 Solvent Cement

Solvent cement shall conform to the requirements of ASTM D 2564.

2.2.5 POLYETHYLENE (PE) PLASTIC PIPING

Pipe shall conform to AWWA C901, outside diameter base with dimension ratio (DR) of 9.3 to provide 1034 kPa minimum pressure rating. Fittings shall conform to ASTM D 3261, DR of 9.3.

2.2.6 DIELECTRIC FITTINGS

Dielectric fittings shall conform to ASTM F 441, Schedule 80, CPVC threaded pipe nipples, 100 mm minimum length.

2.2.7 EMITTER HOSE AND DISTRIBUTION TUBING

Emitter hose and distribution tubing shall conform to ASTM D 2287, maximum inside diameter of 13 mm , minimum wall thickness of 2.286 mm , vinyl plastic extruded from non-rigid chloride, integrally algae-resistant, homogeneous throughout, smooth inside and outside, free from foreign materials, cracks, serrations, blisters and other effects. Slip fittings shall be provided.

2.3 SPRINKLER AND EMITTER HEADS

2.3.1 POP-UP SPRAY HEADS

2.3.1.1 General Requirements

Pop-up spray heads lay flush with housing, then pop up when water pressure 138 kPa is activated in system. The rising member supporting the nozzle shall be identical on full, half, third or quarter pattern sprinklers so that nozzles will be interchangeable. The sprinkler head shall be designed to be adjustable for coverage and flow. The nozzle shall be removable so head does not have to be removed for flushing or cleaning. Nozzle rises a minimum of 100 mm above the body. The body shall be constructed with a 13 mm female thread for installation in a fixed underground pipe system. Acceptable manufacturers shall be Rainbird, Toro, Hunter, or Weathermatic.

2.3.1.2 Shrub Sprinkler Heads

Sprinkler heads shall be conical spray with adjustable or non-adjustable coverage and designed for permanent aboveground mounting on riser or pop-ups at a height compatible with shrubs and ground covers. Provide brass nozzles.

2.3.2 ROTARY POP-UP SPRINKLERS

Sprinklers shall be capable of covering turf areas with head to head spacing. Sprinkler diameter, distribution rate, trajectory, and maximum height of spray shall be determined by the contractor based on appropriate design for turf areas. Pop-up height shall be 100 mm or 150 mm. Construction shall be high impact molded plastic with filter screen, reducible watering radius, and choice of nozzles with adjustable radius capabilities.

2.3.3 BUBBLER SPRINKLER HEADS

Bubblers shall be acceptable to use for individual tree locations, in lieu of drip irrigation. Heads shall be multiple-spray bubbler with adjustable flow and designed for permanent aboveground mounting on risers.

2.3.5 EMITTER HEADS

Emitter heads shall be self-cleaning, pressure compensating diaphragm with one or six self-piercing barbed outlets; each capable of emitting from 1 to 8 L/hour per hour flow. Emitter body shall be ultraviolet stabilized, algae, and heat resistant plastic construction.

2.4 VALVES

2.4.1 GATE VALVES, LESS THAN 80 MM

Gate valves shall conform to the requirements of MSS SP-80, Type 1, Class 150, threaded ends.

2.4.5 QUICK COUPLING VALVES

Quick coupling valves shall have brass parts and shall be two-piece unit consisting of a coupler water seal valve assembly and a removable upper body to allow spring and key track to be serviced without shutdown of main. Lids shall be lockable vinyl with spring for positive closure on key removal.

2.4.6 REMOTE CONTROL VALVES, ELECTRICAL

Remote control valves shall be solenoid actuated globe valves of 20 to 80 mm size, suitable for 24 volts, 60 cycle, and designed to provide for shut-off in event of power failure. Valve shall be cast bronze or brass or plastic housing suitable for service at 1034 kPa operating pressure with external flow control adjustment for shut-off capability, external plug at diaphragm chamber to enable manual operation, filter in control chamber to prevent valve body clogging with debris, durable diaphragm, and accessibility to internal parts without removing valve from system.

2.4.7 DRAIN VALVES

2.4.7.1 Manual Valves

Manual valves shall conform to requirements of MSS SP-80, Type 3, Class 150 threaded ends for sizes less than 65 mm and larger.

2.4.7.2 Automatic Valves

Automatic valves shall be brass or plastic, spring loaded ball drip type, Class 150 and threaded ends, designed to close at 18 kPa pressure head with positive seal at 21 kPa pressure or greater and be open to drain at less than 21 kPa pressure.

2.4.8 PRESSURE REGULATING MASTER VALVE

Pressure regulating master valve shall be automatic mechanical self-cleaning, self-purging control system having an adjustable pressure setting operated by a solenoid on alternating current with 0.70 amperes at 18 volts. Valve shall close slowly and be free of chatter in each diaphragm position, have manual flow stem to adjust closing speed and internal flushing, and one inlet tappings capable of being installed as a straight pattern valve. Body shall be cast bronze or brass with removable brass seat

serviceable from top without removing valve body from system. Valve shall operate at 1034 kPa working pressure and pilot range from 70 to 875 kPa .

2.4.9 BACKFLOW PREVENTERS

Reduced pressure principle assemblies, double check valve assemblies, atmospheric (nonpressure) type vacuum breakers, and pressure type vacuum breakers shall be tested, approved, and listed in accordance with FCCCHR-01. Reduced pressure principle backflow preventers shall be in accordance with ASSE 1013.

2.4.9.2 Reduced Pressure Type Backflow Preventers

Backflow preventers shall be Class 150 flanged , bronze mounted gate valve and strainer, 304 stainless steel or bronze, internal parts. Total pressure drop through complete assembly shall be a maximum of 70 kPa at rated flow. Piping shall be galvanized steel pipe and fittings. Strainers shall be bronze or brass construction with gasket caps. Units shall have 200-mesh stainless steel screen elements.

2.5 ACCESSORIES AND APPURTENANCES

2.5.1 VALVE KEYS FOR MANUALLY OPERATED VALVES

Valve keys shall be 15 mm by 1000 mm long, tee handles and keyed to fit valves.

2.5.2 VALVE BOXES AND CONCRETE PADS

2.5.2.1 Valve Boxes

Valve boxes shall be plastic for each gate valve, manual control valve and remote control valve. Box sizes shall be adjustable for valve used. Word "IRRIGATION" shall be cast on cover. Remote control valves shall be in a 300 mm by 450 mm standard valve box with non-hinging cover. Isolation valves, gate valves, wire splices, and quick coupling valves shall be in a 225 mm round valve box with cover. All plastic valve boxes to be green in color with green colored covers. Acceptable manufacturers are Ametek, Carson and Brooks.

2.5.6 EMITTER HEAD ACCESSORIES

2.5.6.1 Strainer

Strainer shall be provided at inlet to each drip line. Strainer shall have stainless steel screen having equivalent of 140-mesh filtration capacity and incorporate flush valves within strainer to clean screen without disassembling unit.

2.5.6.2 Pressure Regulator

Pressure regulator shall be provided at each drip system if supply pressure exceeds 350 kPa.

2.5.6.3 Riser Adapters

Riser adapters shall be provided with a rigid piping system.

2.5.6.4 Tubing Stakes

Tubing stakes shall be plastic coated steel, or other non-corrosive strong material to secure tubing.

2.5.6.5 Emitter Outlet Check Valve (Bug Cap)

Check valves shall be provided at end of each emitter outlet distribution line. Valves shall permit free flow of water with minimum restriction; prevent back siphoning, entry of insects, and contamination into outlet ports.

2.5.6.6 Access Sleeve

Access sleeve shall be provided at buried emitters placed in covered boxes. Lids of access sleeve shall be secured with removable lugs. Drip hose in both vertical and horizontal axis shall be secured.

2.5.6.7 Closure Caps

Closure caps shall be in accordance with manufacturer's recommendations.

2.6 AUTOMATIC CONTROLLERS, ELECTRICAL

Controller shall conform to the requirements of NEMA ICS 2 with 120-volt single phase service, operating with indicated stations, and grounded chassis. Enclosure shall conform to NEMA ICS 6 Type 3R, with locking hinged cover, wall-mounted. Controller shall be programmed for various schedules by setting switches and dials equipped with the following features: A switch for each day of week for two schedules, allowing each station to be scheduled individually as to days of watering; a minute switch for each station with a positive increment range of 0 to 3 hours, set time within one percent; a switch allowing selected schedules to be repeated after each completion of initial watering schedule and allowing each operation to be scheduled throughout a 24-hour day; a circuit breaker for surge protection; and circuit for a 9-volt rechargeable NiCad battery. Controller shall be electromechanical type. Acceptable manufacturers are Weathermatic RM Series; Toro Commercial Series; or Rainbird RC-C Series.

2.7 ELECTRICAL WORK

Wiring and rigid conduit for electrical power shall be in accordance with NFPA 70, and SECTION 16375 ELECTRICAL DISTRIBUTION SYSTEM, UNDERGROUND.

2.8 CONCRETE MATERIALS

Concrete shall have a compressive strength of 17 MPa at 28 days as specified in SECTION 03300, CAST-IN-PLACE STRUCTURAL CONCRETE.

PART 3 EXECUTION

3.1 INSTALLATION

Sprinkler system shall be installed after site grading has been completed. Excavation, trenching, and backfilling for sprinkler system shall be in accordance with the applicable provisions of SECTION 02316, EXCAVATION, TRENCHING, AND BACKFILLING FOR UTILITIES SYSTEMS, except as modified herein.

3.1.1 TRENCHING AND PIPE SLEEVES

Trench around roots shall be hand excavated to pipe grade when roots of 50 mm diameter or greater are encountered. Trench width shall be 100 mm minimum or 1-1/2 times diameter of pipe, whichever is wider. Backfill shall be hand tamped over excavation. Trench shall be excavated 100 mm deeper and backfilled with silty sand (SM) or well-graded sand (SW) to 50 mm min. above top of pipe. Trenches shall be kept free of obstructions and debris that would damage pipe. Subsoil shall not be mixed with topsoil. Existing concrete walks, drives and other obstacles shall be bored at a depth conforming to bottom of adjacent trenches. Pipe sleeves shall be two pipe diameters larger than sprinkler pipe.

3.1.2 PIPING SYSTEM

3.1.2.1 Cover

Underground piping shall be installed to meet the minimum depth of backfill cover specified.

3.1.2.2 Clearances

Minimum horizontal clearances between lines shall be 100 mm for pipe 50 and less; 300 mm for 65 mm and larger. Minimum vertical clearances between lines shall be 25 mm. .

3.1.2.3 Minimum Slope

Minimum slope shall be 50 mm per 10 m in direction of drain valves.

3.1.3 PIPING INSTALLATION

3.1.3.1 Polyvinyl Chloride (PVC) Pipe

a. Solvent-cemented joints shall conform to the requirements of ASTM D 2855.

b. Threaded joints shall be full cut with a maximum of three threads remaining exposed on pipe and nipples. Threaded joints shall be made tight without recourse to wicks or fillers, other than polytetrafluoroethylene thread tape.

c. Piping shall be joined to conform with requirements of ASTM D 2774 or ASTM D 2855, and pipe manufacturer's instructions. Pipe shall be installed in a serpentine (snaked) manner to allow for

expansion and contraction in trench before backfilling. Pipes shall be installed at temperatures over 5 degrees C.

3.1.3.3 Galvanized Steel Pipe

Prior to installation, pipe shall be reamed. Threads shall be cut in conformance with ASME B1.2. Pipe joint compound shall be applied to male end only.

3.1.4 INSTALLATION OF VALVES

3.1.4.1 Manual Valves

Valves shall be installed in a valve box extending from grade to below valve body, with a minimum of 100 mm cover measured from finish grade to top of valve stem.

3.1.4.2 Automatic Valves

Valve shall be set plumb in a valve box extending from grade to below valve body, with minimum of 100 mm cover measured from grade to top of valve. Automatic valves shall be installed beside sprinkler heads with a valve box.

3.1.4.3 Drain Valves

Entire system shall be manually or automatically drainable. Low points of system shall be equipped with drain valve draining into an excavation containing 0.03 cubic meter gravel. Gravel shall be covered with building paper then backfilled with excavated material and 150 mm of topsoil.

3.1.5 SPRINKLERS AND QUICK COUPLING VALVES

Sprinklers and valves shall be installed plumb and level with terrain.

3.1.6 INSTALLATION OF DRIP IRRIGATION SYSTEM

3.1.6.1 Emitter Hose

Emitter laterals shall be buried 150 mm deep. Connections shall be solvent welded in accordance with manufacturer's recommendation to standard weight Schedule 40 PVC fittings and bushings. Hose shall be installed in a serpentine manner. When cutting hose, shearing tool such as a pipe cutter, knife, or shears shall be used. Manufacturer's recommended tool and procedures when punching hose for emitters shall be followed.

3.1.6.2 Emitter Heads

Emitters shall be installed in a plastic emitter box. Emitter on a rigid PVC nipple shall be connected to PVC drip lateral with a tee or elbow. Tubing shall be attached to barbed fitting and daylight distribution tubing at root ball secured with stake, with bug cap at end of secured distribution tubing. After installing emitters and before operating system, end of drip lateral shall be opened and flushed clean. The number of emitters on a line shall not exceed manufacturer's recommendations for that hose or distribution tubing size and length.

3.1.6.3 Tubing Stakes

Stakes shall be spaced to ensure that hose does not shift location in presence of foot traffic, operations, gravity on slope installations, or environmental effects. Discharge of the emitter distribution tubing shall be staked to ensure that discharge point of emitter will be maintained at specified position in relation to plant material to be irrigated. Install end of distribution tubing 50 mm above grade with plastic stake. Remainder of distribution tubing shall be buried below mulch.

3.1.7 BACKFLOW PREVENTERS

Backflow preventer shall be installed in new connection to existing water distribution system, between connection and control valves. Backflow preventer shall be installed with concrete pads.

3.1.7.2 Reduced Pressure Type

Pipe lines shall be flushed prior to installing reduced pressure device; device shall be protected by a strainer located upstream. Device shall not be installed in pits or where any part of device could become submerged in standing water.

3.1.8 CONTROL WIRE AND CONDUIT

3.1.8.1 Wires

Low voltage wires may be buried beside pipe in same trench. Rigid conduit shall be provided where wires run under paving. Wires shall be number tagged at key locations along main to facilitate service. One control circuit shall be provided for each zone and a circuit to control sprinkler system.

3.1.8.2 Loops

A 300 mm loop of wire shall be provided at each valve where controls are connected.

3.1.8.3 Expansion and Contraction

Multiple tubes or wires shall be bundled and taped together at 6 m intervals with 300 mm loop for expansion and contraction.

3.1.8.4 Splices

Electrical splices shall be waterproof.

3.1.9 AUTOMATIC CONTROLLER

Exact field location of controllers shall be determined before installation. Coordinate the electrical service to these locations. Install in accordance with manufacturer's recommendations and NFPA 70.

Concrete shall be placed so that sides subject to thrust or load are against undisturbed earth, and valves and fittings are serviceable after concrete has set. Thrust blocks shall be as specified in SECTION 02510 WATER DISTRIBUTION SYSTEM.

3.1.11 BACKFILL

3.1.11.1 Minimum Cover

Depth of cover shall be 300 mm for 13 mm pipe; 450 mm for 19 to 50 pipe; 600 mm for main lines and pipe under sidewalks; 1000 mm for pipes under traffic loads; and 300 mm for low-voltage wires. Remainder of trench or pipe cover shall be filled to within 80 mm of top with excavated soil, and compact soil with plate hand-held compactors to same density as undisturbed adjacent soil.

3.1.11.2 Restoration

Top 80 mm shall be filled with topsoil and compacted with same density as surrounding soil. Lawns and plants shall be restored in accordance with SECTION 02922 SODDING and SECTION 02930 EXTERIOR PLANTING. Pavements shall be restored in accordance with SECTION 02741 Bituminous Paving for Roads, Streets and Open Storage Areas, SECTION 02754 Concrete Pavements, and SECTION 02770 Concrete Sidewalks and Curbs and Gutters.

3.1.12 ADJUSTMENT

After grading, seeding, and rolling of planted areas, sprinkler heads shall be adjusted flush with finished grade. Adjustments shall be made by providing new nipples of proper length or by use of heads having an approved device, integral with head, which will permit adjustment in height of head without changing piping.

3.1.13 DISINFECTION

Sprinkler system fed from a potable water system shall be disinfected upstream of backflow preventer in accordance with SECTION 02510 WATER DISTRIBUTION SYSTEM.

3.1.14 CLEANING OF PIPING

Prior to the hydrostatic and operation tests, the interior of the pipe shall be flushed with clean water until pipe is free of all foreign materials. Flushing and cleaning out of system pipe, valves, and components shall not be considered completed until witnessed and accepted by Contracting Officer.

3.2 FIELD TESTS

All instruments, equipment, facilities, and labor required to conduct the tests shall be provided by Contractor.

3.2.1 HYDROSTATIC PRESSURE TEST

Piping shall be tested hydrostatically before backfilling and proved tight at a hydrostatic pressure of 1034 kPa without pumping for a period of one hour with an allowable pressure drop of 35 kPa . If

hydrostatic pressure cannot be held for a minimum of 4 hours, Contractor shall make adjustments or replacements and the tests repeated until satisfactory results are achieved and accepted by the Contracting Officer.

3.2.2 LEAKAGE TESTS

Leakage tests for service main shall be in accordance with SECTION 02510 WATER DISTRIBUTION SYSTEM.

3.2.3 OPERATION TEST

At conclusion of pressure test, sprinkler heads or emitter heads, quick coupling assemblies, and hose valves shall be installed and entire system tested for operation under normal operating pressure. Operation test consists of the system operating through at least one complete programmed cycle for all areas to be sprinkled.

3.3 FRAMED INSTRUCTIONS

Framed instructions containing wiring and control diagrams under glass or in laminated plastic shall be posted where directed. Condensed operating instructions, prepared in typed form, shall be framed as specified above and posted beside the diagrams. The framed instructions shall be posted before acceptance testing of the system. After as-built drawings are approved by Contracting Officer, controller charts and programming schedule shall be prepared. One chart for each controller shall be supplied. Chart shall be a reduced drawing of actual as-built system that will fit the maximum dimensions inside controller housing. Black line print for chart and a different pastel or transparent color shall indicate each station area of coverage. After chart is completed and approved for final acceptance, chart shall be sealed between two 0.505 mm pieces of clear plastic.

3.4 FIELD TRAINING

A field training course shall be provided for designated operating and maintenance staff members. Training shall be provided for a total period of 4 hours of normal working time and shall start after the system is functionally complete but prior to final acceptance tests. Field training shall cover all of the items contained in the operating and maintenance manuals.

3.5 CLEANUP

Upon completion of installation of system, all debris and surplus materials resulting from the work shall be removed.

END OF SECTION

SECTION 02870

SITE FURNISHINGS

PART 1 GENERAL

1.1 REFERENCES

The publications listed below form a part of this specification to the extent referenced. The publications shall be referred to in the text by basic designation only.

AMERICAN SOCIETY FOR TESTING AND MATERIALS (ASTM)

ASTM A 36/A 36M	(1996) Carbon Structural Steel
ASTM A 48	(1994a) Gray Iron Castings
ASTM A 48M	(1994) Gray Iron Castings (Metric)
ASTM A 123	(1989a) Zinc (Hot-Dip Galvanized) Coatings on Iron and Steel Products
ASTM A 153	(1996) Zinc Coating (Hot-Dip) on Iron and Steel Hardware
ASTM A 500	(1993) Cold-Formed Welded and Seamless Carbon Steel Structural Tubing in Rounds and Shapes
ASTM A 501	(1993) Hot-Formed Welded and Seamless Carbon Steel Structural Tubing
ASTM A 615/A 615M	(1996a) Deformed and Plain Billet-Steel Bars for Concrete Reinforcement
ASTM B 26/B 26M	(1996a) Aluminum-Alloy Sand Castings
ASTM B 62	(1993) Composition Bronze or Ounce Metal Castings
ASTM B 108	(1996a) Aluminum-Alloy Permanent Mold Castings
ASTM C 150	(1996) Portland Cement
ASTM D 648	(1996) Deflection Temperature of Plastics Under Flexural Load
ASTM D 2990	(1995) Tensile, Compressive, and Flexural Creep and Creep-Rupture of Plastics

ASTM F 1487	(1995) Standard Consumer Safety Performance Specification for Playground Equipment for Public Use

1.2 SUBMITTALS

Government approval is required for submittals with a "GA" designation; submittals having an "FIO" designation are for information only. The following shall be submitted in accordance with SECTION 01330 SUBMITTAL PROCEDURES:

SD-01 Data

Site Furnishings; FIO.

Manufacturer's descriptive data and catalog cuts.

SD-04 Drawings.

Site Furnishing Standards; FIO.

Drawings showing scaled details of proposed site furnishings, elevations for each type of site furnishing; dimensions, details, and methods of mounting or anchoring; shape and thickness of materials; and details of construction. Complete drawings for the following shall be provided:

Trash receptacles
Benches
Picnic Tables
Bike Rack
Outdoor Announcement Board
Exterior Signage
Wire Screen Trellis

SD-06 Instructions

INSTALLATION; FIO.

Manufacturer's installation and maintenance instructions.

SD-08 Statements

Materials; FIO.

A listing indicating the furnishings provided have been in proven satisfactory use for at least 2 years.

SD-09 Reports

Recycled Material; FIO.

A report of site furnishing parts consisting of recycled materials. Product specification data shall provide test information for deflection and creep in accordance with ASTM D 648 and ASTM D 2990 for site furnishings which use plastic lumber as a component, shall be submitted. The data shall provide a comparison of deflection and creep measurements to other comparable materials.

Testing; FIO.

A report of post-installation test results.

SD-14 Samples

FINISH; FIO.

Two sets of color data for each furnishing displaying manufacturer's color selections and finishes, and identifying those colors and finishes proposed for use.

1.3 DELIVERY, STORAGE, AND HANDLING

Materials shall be delivered, handled, and stored in accordance with the manufacturer's recommendations. The storage area shall be as designated. The materials shall be stored in a dry, covered area until installed.

1.4 INSPECTION

Site furnishings shall be inspected upon arrival at the job site for conformity to specifications and quality in accordance with paragraph MATERIALS. Unacceptable items shall be removed from the job site.

PART 2 PRODUCTS

2.1 TRASH RECEPTACLE

Metro Trash Receptacle, Canterbury International or approved equal. Precast reinforced concrete, charcoal gray color, light sandblasted, 533 mm-560 mm square trash receptacle. Height shall be 1016 mm-1040 mm with two side openings 150 mm by 300 mm. Receptacle shall have a 75.7L rigid removable plastic liner. Door shall be 1.3 mm (18 ga) steel, 432 mm by 806.5 mm dark brown powder coated, with door lock. Trash receptacles that can be anchored to resist overturning by typical use, high winds, or animals shall be furnished and anchored in accordance with the manufacturer's recommendations. Locate where shown on drawings. Concrete shall be finished with a clear acrylic plastic coating.

2.2 BENCHES

Benches shall match Model No. 03-121P, by Natural Structures, recycled bench or approved equal. Bench shall be 1778 mm long with back on dark brown powder-coated steel frame. Seven, 100 mm by 100 mm slats constructed of recycled plastic, cedar brown color. Locate and install as shown on drawings.

2.3 PICNIC TABLES

Picnic tables shall be Model No. 91-215 (4 seats) or Model No. 91-212 (2 seats) by Natural Structures, or approved equal. Square table (915 mm) on center square tubular steel post. Post shall be dark brown powder-coated with two or four backless benches cantilevered from center support, as indicated on drawings. Table and benches constructed of 100 mm by 100 mm slats of recycled plastic, cedar brown color. Locate and install as shown on drawings.

2.4 BIKE RACK

Bike rack shall be Expo 7510, by Cora Bike Rack, Inc., or approved equal. Capacity shall be for 10 bikes as rated for double-sided access. Bike shall be constructed of heavy duty quality steels. Mainframe shall be 61 mm O.D., and hangers shall be 19 mm minimum diameter round bar. Bike rack shall include all flanges or hardware for surface mounting. Mainframe finish shall be semi-gloss dark brown-powder coated or dark brown plastic color coated carbon steel. Finish shall factory applied. Hangers shall be of the same finish as the mainframe. Locate and install as shown on drawings.

2.5 OUTDOOR ANNOUNCEMENT BOARD

Outdoor announcement board shall be Wide Profile Modulex by ASI Sign Systems; Model No. UVP-1306 by UpBeat, Inc. or approved equal. Outdoor announcement board shall be illuminated, 1000 mm by 1000mm approximate dimensions, satin aluminum finish with black vinyl letter board. White translucent acrylic header panel shall be provided with “North Fort Athletic Complex” in black vinyl letters. Board shall have a lockable satin aluminum double door frame with shatter-resistant acrylic door panels and a cylinder lock. Two keys shall be provided. A 280 piece minimum assortment of vinyl letters in 19 mm and 25 mm sizes shall also be included to be used with the board. Board shall be permanently mounted to exterior wall of new building where indicated on the drawings.

2.6 EXTERIOR SIGNAGE

Two exterior signs are required to be constructed and installed as part of this contract. One sign (primary) will be provided at the main (north) entrance to the building and one sign (secondary) will be provided at the courtyard or south entrance to the building. The primary entrance sign shall be larger as dimensioned on the drawings, and the secondary sign shall be smaller as indicated on the drawings. Both signs will be constructed of concrete and brick base. Concrete finish shall be smooth, light sandblast. Sign mounts shall be 300 mm by 1118 mm by 3.125 mm steel plate. Construction and assembly shall be as shown on the detail drawings.

2.7 WIRE SCREEN TRELLIS

Wire screen trellis shall be modular panels constructed of 1.9 mm galvanized steel wire welded to form a 50 mm by 50 mm gace grid, front and back, separated by bent wire trusses either 50 mm or 75 mm in depth. All panels shall be available in any width up to 1.2M and any length up to 3.6M in 50 mm increments in either 50 mm or 75 mm depth. Channel trim shall be 75 mm by 13 mm by 13 mm and edge trim shall be 13 mm by 12 mm. All trim shall be 1.0 mm galvanized sheet steel, welded, with all exterior surfaces ground smooth prior to powder coat finish. All mounting clips shall be fabricated from 1.9 mm, 1.5 mm, or 1.2 mm galvanized steel sheet stock. All bending, forming, and drilling shall be done prior to powder coat finish. All panels, trim and miscellaneous mounting clips shall be coated

with thermally-set powder paint in black finish color. Wire screen trellis shall be Greenscreen by Atmospherics/greenscreen or approved equal.

2.8 MATERIALS

Materials shall be the standard products of a manufacturer regularly engaged in the manufacture of such products. The materials provided shall be of a type with proven satisfactory use for at least 2 years.

2.8.1 Concrete

Portland cement shall conform to ASTM C 150 Types I, II, or III.

2.8.1.1 Pre-cast Concrete

Pre-cast concrete material and products shall conform to SECTION 03413 PRECAST ARCHITECTURAL CONCRETE.

2.8.1.2 Cast-in-Place Concrete

Cast-in-place concrete materials and products shall conform to SECTION 03300 CONCRETE FOR BUILDING CONSTRUCTION.

2.8.3 Metal

Metallic materials and products shall conform to SECTION 05500 MISCELLANEOUS METAL. Metal components shall be furnished with factory drilled holes. Components shall be free of excess weld and spatter. Metal components with holes that will not be filled by hardware or hidden by other components will be rejected.

2.8.3.2 Reinforcing Steel

Steel used for reinforcement shall be deformed billet steel Grade 40. Steel shall conform to ASTM A 615/A 615M.

2.8.3.4 Cast Aluminum

Cast aluminum shall conform to ASTM B 26/B 26M and ASTM B 108. The Contractor shall provide castings manufactured true to pattern and component parts that fit together in a satisfactory manner. Castings shall be of uniform quality, free from blowholes, porosity, hard spots, shrinkage, distortion, or other defects. Smooth castings shall be well-cleaned by sand or shot blasting.

2.8.4 Brick

See SECTION 04200 MASONRY for specifications on brick and mortar.

2.8.5 Recycled Material

2.8.5.1 General Requirements

Recycled materials shall contain a minimum 85 percent recycled post-consumer product. Recycled materials shall be constructed or manufactured with a maximum 6 mm 1 deflection or creep in any member in conformance with ASTM D 648 and ASTM D 2990.

2.8.5.2 High Density Polyethylene

The Contractor shall provide panels and components molded of ultraviolet (UV) and color stabilized polyethylene, with minimum 6 mm wall thickness; exposed edges shall be smoothed, rounded, and free of burrs and points; and the material shall be resistant to fading, cracking, fogging, and shattering. The material shall be non-toxic and have no discernible contaminates such as paper, foil, or wood. The material shall contain no more than 3 percent air voids. Material shall be resistant to deformation from solar radiation heat gain.

2.8.5.3 Structural Component

Recycled materials to include plastic lumber will not be used as structural components of site furnishings.

2.9 HARDWARE

Hardware shall be zinc-chromate platedorgalvanized steelin accordance with ASTM A 153 and compatible with the material to which applied. All exposed hardware shall match in color and finish. Mounting hardware shall be concealed, recessed, and plugged.

2.10 ANCHORS

Anchors shall be provided, where necessary, for fastening site furnishings securely in place and in accordance with approved manufacturer's instructions. Anchoring devices that may be used, when no anchors are otherwise specified or indicated, include anchor bolts, slotted inserts, expansion shields for concrete; toggle bolts and through bolts for masonry; machine carriage bolts for steel; and lag bolts and screws for recycled plastic members .

2.11 FINISH

Finish shall be as specified by the manufacturer or as indicated. Exposed surfaces and edges shall be rounded, polished, or sanded. Finish shall be non-toxic, non-glare, and resistant to corrosion. Exposed surfaces shall be smooth and splinter-free exposed surfaces.

2.11.1 Coatings

2.11.1.1 Galvanizing

Galvanized components shall be hot-dipped in zinc after fabrication in accordance with ASTM A 123. Tailings and sharp protrusions formed as a result of the hot-dip process shall be removed and exposed edges burnished.

2.11.1.2 Polyester Powder

Powder-coated surfaces shall receive electrostatic zinc coating prior to painting. Powder coating shall be electrostatically applied and oven cured. Polyester powder coating shall be resistant to ultraviolet (UV) light.

2.11.3 Paint

Paint shall be factory applied with a minimum of 2 coats. Paint shall be weather-resistant and resistant to cracking, peeling and fading.

2.11.4 Color

Color of site furnishing components shall be in accordance with the drawings.

2.12 SITE FURNISHING STANDARDS

Site furnishings shall be furnished with the dimensions and requirements indicated.

PART 3 EXECUTION

3.1 INSTALLATION

The Contractor shall verify that finished grades and other operations affecting mounting surfaces have been completed prior to the installation of site furnishings. Site furnishings shall be installed plumb and true in accordance with the approved manufacturer's instructions. Wire screen trellis shall be installed in accordance with approved manufacturer’s recommendations and as detailed on the drawings.

3.1.6 Testing

Each site furnishing shall be tested to determine a secure and correct installation. A correct installation shall be according to the manufacturer's recommendations and by the following procedure: The Contractor shall measure the physical dimensions and clearance of each installed site furnishing for compliance with manufacturer's recommendations and as indicated. Site furnishings which do not comply shall be reinstalled. Fasteners and anchors determined to be non-compliant shall be replaced. A written report describing the results of the testing shall be provided.

3.2 RESTORATION AND CLEAN UP

When the installation has been completed, the Contractor shall clean up and protect the site. Existing areas that have been damaged from the installation operation shall be restored to original condition at Contractor's expense.

3.2.1 Clean Up

The site shall be cleaned of all materials associated with the installation. Site furnishing surfaces shall be cleaned of dirt, stains, filings, and other blemishes occurring from shipment and installation. Cleaning methods and agents shall be according to manufacturer's instructions or as indicated.

3.2.2 Protection

The area shall be protected as required or directed by providing barricades and temporary signage

3.2.3 Disposal of Materials

Excess and waste material shall be removed and disposed off Government property .

3.3 RE-INSTALLATION

Where re-installation is required, the following shall be accomplished:

a. Re-install the product as specified. Material acquisition of replacement parts is the responsibility of the Contractor. Provide replacement materials that are new and supplied by the original manufacturer to match.

b. Damage caused by the failed installation shall be repaired.

END OF SECTION

SECTION 02922

SODDING

PART 1 GENERAL

1.1 REFERENCES

AMERICAN SOCIETY FOR TESTING AND MATERIALS (ASTM)

ASTM C 602	(1995a) Agricultural Liming Materials
ASTM D 4972	(1995a) pH of Soils
ASTM D 5268	(1992; R 1996) Topsoil Used for Landscaping Purposes

1.2 SUBMITTALS

Government approval is required for submittals with a "GA" designation; submittals having an "FIO" designation are for information only. The following shall be submitted in accordance with SECTION 01330 SUBMITTAL PROCEDURES:

SD-01 Data

Equipment; FIO. Chemical Treatment Material; FIO.

Manufacturer's literature including physical characteristics, application and installation instructions for equipment and chemical treatment material.

SD-07 Schedules

Equipment; FIO.

A listing of equipment to be used for the sodding operation.

SD-08 Statements

Delivery; FIO.

Delivery schedule.

Finished Grade and Topsoil; FIO.

Finished grade status.

Topsoil; FIO.

Availability of topsoil from the stripping and stock piling operation.

SD-09 Reports

Equipment Calibration; FIO.

Certification of calibration tests conducted on the equipment used in the sodding operation.

Soil Test; FIO.

Certified reports of inspections and laboratory tests, prepared by an independent testing agency, including analysis and interpretation of test results. Each report shall be properly identified. Test methods used and compliance with recognized test standards shall be described.

SD-13 Certificates

Sod; FIO. Topsoil; FIO. pH Adjuster; FIO. Fertilizer; FIO. Organic Material; FIO. Soil Conditioner; FIO. Pesticide; GA.

Prior to the delivery of materials, certificates of compliance attesting that materials meet the specified requirements. Certified copies of the material certificates shall include the following:

a. Sod. Classification, botanical name, common name, mixture percentage of species, percent purity, quality grade, field location and state certification.

b. Topsoil. Particle size, pH, organic matter content, textural class, soluble salts, chemical and mechanical analyses.

c. pH Adjuster. Calcium carbonate equivalent and sieve analysis.

d. Fertilizer. Chemical analysis and composition percent.

e. Organic Material: Composition and source.

f. Soil Conditioner: Composition and source.

g. Pesticide. EPA registration number and registered uses.

SD-14 Samples

Delivered Topsoil; FIO.

Samples taken from several locations at the source.

Soil Amendments; FIO.

A 4.5 kilogram sample.

SD-18 Records

Quantity Check; FIO.

Bag count or bulk weight measurements of material used compared with area covered to determine the application rate and quantity installed. The quantity of sod used shall be compared against the total area installed.

Sod Establishment Period; GA.

Calendar time period for the sod establishment period. When there is more than one sod establishment period, the boundaries of the sodded area covered for each period shall be described.

Maintenance Record; FIO.

Maintenance work performed, area repaired or reinstalled, diagnosis for unsatisfactory stand of grass plants.

Application of Pesticide; GA.

Pesticide treatment plan with sequence of treatment work with dates and times. The pesticide trade name, EPA registration number, chemical composition, formulation, concentration of original and diluted material, application rate of active ingredients, method of application, area treated, amount applied; and the name and state license number of the state certified applicator shall be included.

1.3 SOURCE INSPECTION

The sources of sod material and delivered topsoil shall be subject to inspection.

1.4 DELIVERY, INSPECTION, STORAGE, AND HANDLING

1.4.1 Delivery

A delivery schedule shall be provided at least 10 calendar days prior to the first day of delivery.

1.4.1.1 Sod

Sod shall be protected during delivery to prevent desiccation, internal heat buildup, or contamination.

1.4.1.2 Delivered Topsoil

Prior to the delivery of any topsoil, its availability shall be verified in paragraph TOPSOIL. A soil test shall be provided for topsoil delivered to the site.

1.4.1.3 Soil Amendments

Soil amendments shall be delivered to the site in the original, unopened containers bearing the manufacturer's chemical analysis. In lieu of containers, soil amendments may be furnished in bulk. A chemical analysis shall be provided for bulk deliveries.

1.4.1.4 Pesticides

Pesticide material shall be delivered to the site in the original, unopened containers bearing legible labels indicating the EPA registration number and the manufacturer's registered uses.

1.4.2 Inspection

Sod shall be inspected upon arrival at the job site for conformity to species. Sod shall be checked for visible broadleaf weeds, and a visible consistency with no obvious patches of foreign grasses that exceed 2 percent of the canopy. Sod that is heating up, dry, moldy, yellow, irregularly shaped, torn, or of uneven thickness shall be rejected. Other materials shall be inspected for compliance with specified requirements. Open soil amendment containers or wet soil amendments; topsoil that contains slag, cinders, stones, lumps of soil, sticks, roots, trash or other material over a minimum 40 mm diameter; and topsoil that contains viable plants and plant parts, shall be rejected. Unacceptable materials shall be removed from the job site.

1.4.3 Storage

1.4.3.1 Sod

Sod shall be stored in designated areas and kept in a moist condition by watering with a fine mist, and covered with moist burlap, straw, or other covering. Covering shall allow air to circulate, preventing internal heat from building up. Sod shall be protected from exposure to wind and direct sunlight until installed.

1.4.3.2 Other Material Storage

Materials shall be stored in designated areas. Lime and fertilizer shall be stored in cool, dry locations, away from contaminants. Chemical treatment material shall be stored according to manufacturer's instructions and not with sod operation materials.

1.4.4 Handling

Sod shall not be damaged during handling. Except for bulk deliveries, materials shall not be dropped or dumped from vehicles.

1.4.5 Time Limitation

Time limitation between harvesting and installing sod shall be a maximum 36 hours.

PART 2 PRODUCTS

2.1 SOD

2.1.1 Sod Classification

State-certified sod shall be provided as classified by applicable state laws. Sod section shall be sized to permit rolling and lifting without breaking.

2.1.2 Grass Species

Grass species shall be proportioned as follows:

Botanical Name	Common Name	Mixture Percent
Lolium perenne	Turf-type Perennial Ryegrass	50
Festuca rubra Var. rubra	Creeping Red Fescue	50

2.1.3 Quality

Sod shall be relatively free of thatch, diseases, nematodes, soil-borne insects, weeds or undesirable plants, stones larger than 25 mm in diameter, woody plant roots, and other materials detrimental to a healthy stand of grass plants. Broadleaf weeds and patches of foreign grasses shall be a maximum 2 percent of the sod section.

2.1.4 Thickness

Sod shall be machine cut to a minimum 35 mm thickness. Measurement for thickness shall exclude top growth and thatch.

2.1.5 Anchors

Sod anchors shall be as recommended by the sod supplier.

2.1.6 Substitutions

Substitutions will not be allowed without written request and approval from the Contracting Officer.

2.2 TOPSOIL

Topsoil shall be as defined in ASTM D 5268. Topsoil shall be delivered and amended as recommended by the soil test for the seed specified. Topsoil shall be free from slag, cinders, stones, lumps of soil, sticks, roots, trash or other material over a minimum 25 mm diameter. Topsoil shall be free from viable plants and plant parts. Topsoil shall be a sandy loam, sandy clay loam, loam, clay loam, silty clay loam, or silty loam as described by the USDA textural class and shall have a maximum particle size of 19 mm with a maximum of 3 percent retained on a 6.4 mm screen and a minimum of 5 percent passing through a 120 mesh screen. Topsoil shall contain 10-20 percent by volume mised, composted, fine-particle organic matter. Topsoil shall be obtained from well-drained areas and shall not contain more than 5 percent water by volume. Topsoil shall be free from debris, noxious weeds, rhizomes, roots, toxic substances or any other material that may be harmful to plant growth. Decomposed wood derivatives (ground bark, sawdust, or other woodwaste) used in the topsoil shall be free of weeds, weed seeds, and sticks and shall be fully decomposed a minimum of 6 months or stabilized with nitrogen. The pH shall be between 5.5 and 7.5. Soluble salts shall not exceed 500 ppm.

2.3 SOIL AMENDMENTS

Soil amendments shall consist of pH adjuster, fertilizer, organic material, and soil conditioners meeting the following requirements. Vermiculite shall not be used.

2.3.1 pH Adjuster

The pH adjuster shall be an agricultural liming material in accordance with ASTM C 602. These materials may be burnt lime, hydrated lime, ground limestone, or shells. The pH adjuster shall be used to create a favorable soil pH for the plant material specified.

2.3.1.1 Limestone

Limestone material shall contain a minimum calcium carbonate equivalent of 80 percent. Gradation: A minimum 95 percent shall pass through a 2.36 mm sieve and a minimum 55 percent shall pass through a 0.250 mm sieve. To raise soil pH, ground limestone shall be used.

2.3.1.2 Hydrated Lime

Hydrated lime shall contain a minimum calcium carbonate equivalent of 110 percent. Gradation: A minimum 100 percent shall pass through a 2.36 mm sieve and a minimum 97 percent shall pass through a 0.250 mm sieve.

2.3.1.3 Burnt Lime

Burnt lime shall contain a minimum calcium carbonate equivalent of 140 percent. Gradation: A minimum 95 percent shall pass through a 2.36 mm sieve and a minimum 35 percent shall pass through a 0.250 mm sieve.

2.3.2 Fertilizer

It shall be as recommended by the soil test. For bidding purposes, the nutrients ratio shall be 18 percent nitrogen, 24 percent phosphorus, and 6 percent potassium]. Fertilizer shall be controlled release commercial grade, free flowing, uniform in composition, and consist of a nitrogen-phosphorus-potassium ratio. The fertilizer shall be derived from sulphur coated urea, urea formaldehyde, plastic or polymer coated pills, or isobutylenediurea (IBDU). Fertilizer shall be balanced with the inclusion of trace minerals and micro-nutrients.

2.3.4 Organic Material

Organic material shall consist of either bonemeal, rotted manure, decomposed wood derivatives, recycled compost, or worm castings.

2.3.4.1 Bonemeal

Bonemeal shall be finely ground, steamed bone product containing from 2 to 4 percent nitrogen and 16 to 40 percent phosphoric acid.

2.3.4.2 Rotted Manure

Rotted manure shall be unleached horse, chicken or cattle manure containing a maximum 25 percent by volume straw, sawdust, or other bedding materials. Manure shall contain no chemicals or ingredients harmful to plants. The manure shall be heat treated to kill weed seeds and be free of stones, sticks, and soil.

2.3.4.3 Decomposed Wood Derivatives

Decomposed wood derivatives shall be ground bark, sawdust, yard trimmings, or other wood waste material free of stones, sticks, soil, and toxic substances harmful to plants, fully composted or stabilized with nitrogen.

2.3.4.4 Recycled Compost

Compost shall be a well decomposed, stable, weed free organic matter source. Compost shall be derived from food; agricultural or industrial residuals; biosolids (treated sewage sludge); yard trimmings; or source-separated or mixed solid waste. The compost shall possess no objectionable odors and shall not resemble the raw material from which it was derived. The material shall not contain substances toxic to plants. Gradation: The compost material shall pass through a 10 mm screen, possess a pH of 5.5 to 8.0, and have a moisture content between 35-55 percent by weight. The material shall not contain more than 1 percent or less by weight of man-made foreign matter. Compost shall be cleaned of plastic materials larger than 50 mm in length.

2.3.4.5 Worm Castings

Worm castings shall be screened from worms and food source, and shall be commercially packaged.

2.3.5 Soil Conditioner

Soil conditioner shall be sand, super absorbent polymers, calcined clay, or gypsum for use singly or in combination to meet the requirements for topsoil.

2.3.5.1 Sand

Sand shall be clean and free of toxic materials. Gradation: A minimum 95 percent by weight shall pass a 2 mm sieve and a minimum 10 percent by weight shall pass a 1.18 mm sieve. Greensand shall be balanced with the inclusion of trace minerals and nutrients.

2.3.5.2 Super Absorbent Polymers

To improve water retention in soils, super absorbent polymers shall be sized and applied according to the manufacturer's recommendations. Polymers shall be added as a soil amendment and be cross-linked polyacrylamide with an absorption capacity of 250-400 times its weight.

2.3.5.3 Calcined Clay

Calcined clay shall be granular particles produced from montmorillonite clay calcined to minimum temperature of 650 degrees C. Gradation: A minimum 90 percent passing 2.36 mm sieve; a minimum 99 percent shall be retained on a 0.250 mm sieve; and a maximum 2 percent shall pass a 0.150 mm sieve. Bulk density: A maximum 640 kilogram per cubic meter .

2.3.5.4 Gypsum

Gypsum shall be commercially packaged, free flowing, and a minimum 95 percent calcium sulfate by volume.

2.3.5.5 Expanded Shale, Clay, or Slate (ESCS)

Rotary kiln produced ESCS material shall be in conformance with ASTM D 5883.

2.4 WATER

Water shall be the responsibility of the Contractor unless otherwise noted. Water shall not contain elements toxic to plant life.

2.5 PESTICIDE

Pesticide shall be insecticide, herbicide, fungicide, nematocide, rodenticide or miticide. For the purpose of this specification, a soil fumigant shall have the same requirements as a pesticide. The pesticide material shall be EPA registered and approved.

PART 3 EXECUTION

3.1 INSTALLING SOD TIME AND CONDITIONS

3.1.1 Sodding Time

Sod shall be installed from 1 April to 30 May for spring establishment; and from 15 August to 30 October for fall establishment.

3.1.2 Sodding Conditions

Sodding operations shall be performed only during periods when beneficial results can be obtained. When drought, excessive moisture or other unsatisfactory conditions prevail, the work shall be stopped when directed. When special conditions warrant a variance to the sodding operations, proposed alternate times shall be submitted for approval.

3.1.3 Equipment Calibration

Immediately prior to the commencement of sodding operations, calibration tests shall be conducted on the equipment to be used. These tests shall confirm that the equipment is operating within the manufacturer's specifications and will meet the specified criteria. The equipment shall be calibrated a minimum of once every day during the operation. Provide calibration test results within one week of testing.

3.1.4 Soil Test

Delivered topsoil, existing soil in smooth graded areas, and stockpiled topsoil shall be tested in accordance with ASTM D 5268 and ASTM D 4972 for determining the particle size, pH, organic matter content, textural class, chemical analysis, soluble salts analysis, and mechanical analysis. Sample collection on site shall be random over the entire site. Sample collection for stockpiled topsoil

shall be at different levels in the stockpile. The soil shall be free from debris, noxious weeds, toxic substances, or other materials harmful to plant growth. The test shall determine the quantities and type of soil amendments required to meet local growing conditions for the sod species specified.

3.2 SITE PREPARATION

3.2.1 Finished Grade and Topsoil

The contractor shall verify that elevations are as indicated on drawings and the rough grading has been completed in accordance with SECTION 02300 EARTHWORK. Prior to placing topsoil over compacted or impermeable soils only, thoroughly till areas to a minimum depth of 50 mm by scarifying, disking, harrowing, or other approved method. Topsoil shall be placed to a minimum compacted depth of 150 mm. Do not spread topsoil or soil amendment when frozen or excessively wet or dry. Protect topsoiled areas from damage by vehicular or pedestrian traffic. Fine grading shall be performed by hand to obtain a smooth, even finish, free of irregularities. Topsoil shall be compacted by one pass of a cultipacker roller, or other approved equipment weighing 45Kg to 73Kg per 300 mm of roller.

3.2.2 Application of Soil Amendments

3.2.2.1 Applying pH Adjuster

The pH adjuster shall be applied at the rate recommended by the soil test. The pH adjuster shall be incorporated into the soil to a maximum 100 mm depth or may be incorporated as part of the tillage operation.

3.2.2.2 Applying Fertilizer

The fertilizer shall be applied at the rate recommended by the soil test. Fertilizer shall be incorporated into the soil to a maximum 100 mm depth or may be incorporated as part of the tillage or hydroseeding operation.

3.2.2.3 Applying Soil Conditioner

The soil conditioner shall be as recommended by the soil test. The soil conditioner shall be spread uniformly over the soil a minimum 25 mm depth and thoroughly incorporated by tillage into the soil to a maximum 100 mm depth.

3.2.2.4 Applying Super Absorbent Polymers

Polymers shall be spread uniformly over the soil as recommended by the manufacturer and thoroughly incorporated by tillage into the soil to a maximum 50 mm deep prior to placement of sod.

3.2.3 Tillage

Soil on slopes up to a maximum 3-horizontal-to-1-vertical shall be tilled to a minimum 100 mm deep. On slopes between 3-horizontal-to-1-vertical and 1-horizontal-to-1 vertical, the soil shall be tilled to a minimum 50 mm deep by scarifying with heavy rakes, or other method. Rototillers shall be used where soil conditions and length of slope permit. On slopes 1-horizontal-to-1 vertical and steeper, no tillage is required. Drainage patterns shall be maintained as indicated on drawings. Areas compacted by construction operations shall be completely pulverized by tillage. Soil used for repair of surface

erosion or grade deficiencies shall conform to topsoil requirements. The pH adjuster, fertilizer, and soil conditioner may be applied during this procedure.

3.2.4 Prepared Surface

3.2.4.1 Preparation

The prepared surface shall be a maximum 25 mm below the adjoining grade of any surfaced area. New surfaces shall be blended to existing areas. The prepared surface shall be rolled and completed with a light raking to remove from the surface debris and stones over a minimum 16 mm in any dimension.

3.2.4.2 Protection

Areas within the prepared surface shall be protected from compaction or damage by vehicular or pedestrian traffic and surface erosion.

3.3 INSTALLATION

Prior to installing sod, any previously prepared surface compacted or damaged shall be reworked to meet the requirements of paragraph SITE PREPARATION. Areas shall be sodded as indicated. Adequate soil moisture shall be ensured prior to sodding by spraying water on the area to be sodded and wetting the soil to a maximum 25 mm depth.

3.3.1 Installing Sod

Rows of sod sections shall be placed parallel to and tightly against each other. Joints shall be staggered laterally. The sod sections shall not be stretched or overlapped. All joints shall be butted tight. Voids and air drying of roots shall be prevented. Sod sections shall be laid across the slope on long slopes. Sod sections shall be laid at right angles to the flow of water in ditches. Sod sections shall be anchored on slopes steeper than 3-horizontal-to-1-vertical. Anchoring may be required when surface weight or pressure upon placed sod sections is anticipated to cause lateral movement. Sod anchors shall be placed a minimum 600 mm on center with a minimum 2 anchors per sod section.

3.3.2 Finishing

Displacement of the sod shall be prevented by tamping or rolling the sod in place and knitting the sod to the soil. Air pockets shall be eliminated and a true and even surface shall be provided. Frayed edges shall be trimmed, and holes or missing corners shall be patched with sod.

3.3.3 Rolling

The entire area shall be firmed with a roller not exceeding 130 kilograms per meter roller width. Slopes over a maximum 3-horizontal-to-1 vertical shall not be rolled.

3.3.4 Watering Sod

Watering shall be started immediately after completing each day of installing sod. Water shall be applied at least 3 times per week to supplement rainfall, at a rate sufficient to ensure moist soil conditions to a minimum depth of 25 mm. Run-off, puddling, and wilting shall be prevented. Unless otherwise directed, watering trucks shall not be driven over turf areas. Watering of other adjacent areas or plant material shall be prevented.

3.4.1 Soil Amendments, Tillage and Watering

When soil amendments have not been applied to the area, the quantity of 1/2 of the required soil amendments shall be applied and the area tilled in accordance with paragraph SITE PREPARATION. The area shall be watered in accordance with paragraph Watering Sod as required.

3.4.2 Remaining Soil Amendments

The remaining soil amendments shall be applied in accordance with the paragraph Tillage when the surface is prepared for installing sod.

3.5 QUANTITY CHECK

For materials provided in bags, the empty bags shall be retained for recording the amount used. For materials provided in bulk, the weight certificates shall be retained as a record of the amount used. The amount of the material used shall be compared with the total area covered to determine the rate of application. The quantity of sod used shall be compared against the total area established with sod. Differences between the quantity applied and the quantity specified shall be adjusted as directed.

3.6 APPLICATION OF PESTICIDE

When application of a pesticide becomes necessary to remove a pest or disease, a pesticide treatment plan shall be submitted and coordinated with the installation pest management program.

3.6.1 Technical Representative

The certified installation pest management coordinator shall be the technical representative, and shall be present at all meetings concerning treatment measures for pest or disease control. They may be present during treatment application.

3.6.2 Application

A state certified applicator shall apply required pesticides in accordance with EPA label restrictions and recommendations. Clothing and personal protective equipment shall be used as specified on the pesticide label. A closed system is recommended as it prevents the pesticide from coming into contact with the applicator or other persons. Water for formulating shall only come from designated locations. Filling hoses shall be fitted with a backflow preventer meeting local plumbing codes or standards. Overflow shall be prevented during the filling operation. Prior to each day of use, the equipment used for applying pesticide shall be inspected for leaks, clogging, wear, or damage. Any repairs are to be performed immediately.

3.7 RESTORATION AND CLEAN UP

3.7.1 Restoration

Existing turf areas, pavements, and facilities that have been damaged from the sodding operation shall be restored to original condition at Contractor's expense.

3.7.2 Clean Up

Excess and waste material shall be removed from the sodded areas and shall be disposed offsite. Adjacent paved areas shall be cleaned.

3.8 PROTECTION OF INSTALLED AREAS

Immediately upon completion of the sodding operation in an area, the area shall be protected against traffic or other use by erecting barricades and providing signage as required, or as directed.

3.9 SOD ESTABLISHMENT PERIOD

3.9.1 Commencement

The sod establishment period to obtain a healthy stand of grass plants shall begin on the first day of work under this contract and shall end 3 months after the last day of sodding operation. Written calendar time period shall be furnished for the sod establishment period. When there is more than 1 sod establishment period, the boundaries of the sodded area covered for each period shall be described. The sod establishment period should be coordinated with SECTIONS 02921 SEEDING and 02930 EXTERIOR PLANTING. The sod establishment period shall be modified for inclement weather, shut down periods, or for separate completion dates of areas.

3.9.2 Satisfactory Stand of Grass Plants

Grass plants shall be evaluated for species and health. A satisfactory stand of grass plants from the sodding operation shall be living sod uniform in color and leaf texture. Bare spots shall be a maximum 50 mm square. Joints between sod pieces shall be tight and free from weeds and other undesirable growth.

3.9.3 Maintenance During Establishment Period

Maintenance of the sodded areas shall include eradicating weeds, insects and diseases; protecting embankments and ditches from surface erosion; maintaining erosion control materials and mulch; protecting installed areas from traffic; mowing; watering; and post-fertilization.

3.9.3.1 Mowing

Sodded areas shall be mowed to a minimum 75 mm height when the turf is a maximum 100 mm height. Clippings shall be removed when the amount cut prevents sunlight from reaching the ground surface.

3.9.3.2 Post-Fertilization

A maximum 4 kilograms per hectare of actual available nitrogen shall be provided to the grass plants. The application shall be timed prior to the advent of winter dormancy and shall be made without burning the installed grass plants.

3.9.3.3 Pesticide Treatment

Treatment for disease or pest shall be in accordance with paragraph APPLICATION OF PESTICIDE.

3.9.3.4 Repair

Unsatisfactory stand of grass plants shall be repaired or reinstalled, and eroded areas shall be repaired in accordance with paragraph SITE PREPARATION.

3.9.3.5 Maintenance Record

A record of each site visit shall be furnished which describes the maintenance work performed; areas repaired or reinstalled; and diagnosis for unsatisfactory stand of grass plants.

END OF SECTION

This page intentionally blank

SECTION 02930

EXTERIOR PLANTING

PART 1 GENERAL

1.1 REFERENCES

The publications listed below form a part of this specification to the extent referenced. The publications are referred to in the text by basic designation only.

AMERICAN NURSERY AND LANDSCAPE ASSOCIATION (ANLA)

ANLA ANSI/ANLA Z60.1	(1996) American Standard for Nursery Stock

AMERICAN NATIONAL STANDARDS INSTITUTE (ANSI)

ANSI A300	(1995) Tree Care Operations - Trees, Shrubs and other Woody Plant Maintenance

AMERICAN SOCIETY FOR TESTING AND MATERIALS (ASTM)

ASTM C 602	(1995a) Agricultural Liming Materials
ASTM D 4972	(1995a) pH of Soils
ASTM D 5034	(1995) Breaking Strength and Elongation of Textile Fabrics (Grab Test)
ASTM D 5035	(1995) Breaking Strength and Elongation of Textile Fabrics (Grab Test)
ASTM D 5268	(1992; R1996) Topsoil Used for Landscaping Purposes

1.2 SUBMITTALS

Government approval is required for submittals with a "GA" designation; submittals having an "FIO" designation are for information only. The following shall be submitted in accordance with SECTION 01330 SUBMITTAL PROCEDURES:

SD-01 Data

Geotextile; FIO. Chemical Treatment Material; GA.

Manufacturer's literature including physical characteristics, application and installation instructions for geotextile and chemical treatment material.

SD-07 Schedules

Equipment; FIO.

A listing of equipment to be used for the planting operation.

SD-08 Statements

Delivery; FIO.

Delivery schedule.

Finished Grade, Topsoil and Underground Utilities; FIO.

Finished grade status; location of underground utilities and facilities; and availability of topsoil from the stripping and stock piling operation.

SD-09 Reports

Soil Test; FIO. Percolation Test; FIO.

Certified reports of inspections and laboratory tests, prepared by an independent testing agency, including analysis and interpretation of test results. Each report shall be properly identified. Test methods used and compliance with recognized test standards shall be described.

SD-13 Certificates

Plant Material; FIO. Topsoil; FIO. pH Adjuster; FIO. Fertilizer; FIO. Organic Material; FIO. Soil Conditioner; FIO. Organic Mulch; FIO. Mycorrhizal Fungi Inoculum; FIO. Pesticide; GA.

Prior to delivery of materials, certificates of compliance attesting that materials meet the specified requirements. Certified copies of the material certificates shall include the following.

a. Plant Material: Classification, botanical name, common name, size, quantity by species, and location where grown.

b. Topsoil: Particle size, pH, organic matter content, textural class, soluble salts, chemical and mechanical analyses.

c. pH Adjuster: Sieve analysis and calcium carbonate equivalent.

d. Fertilizer: Chemical analysis and composition percent.

e. Organic Material: Composition and source.

f. Soil Conditioner: Composition and source.

g. Organic Mulch: Composition, source, and treatment against fungi growth.

h. Mycorrhizal Fungi Inoculum: Plant material treated.

i. Pesticide. EPA registration number and registered uses.

SD-14 Samples

Delivered Topsoil; FIO.

Samples taken from several locations at the source.

Soil Amendments; FIO.

A 4.5 kilogram sample.

Mulch; FIO.

A 4.5 kilogram sample.

Geotextile; FIO.

A 150 mm square sample.

SD-18 Records

Plant Establishment Period; GA.

Calendar time period for the plant establishment period. When there is more than one establishment period, the boundaries of the planted areas covered for each period shall be described.

Maintenance Record; FIO.

Maintenance work performed, quantity of plant losses, and replacements; and diagnosis of unhealthy plant material.

Application of Pesticide; GA.

Pesticide treatment plan with sequence of treatment work with dates and times. The pesticide trade name, EPA registration number, chemical composition, formulation, concentration of original and diluted material, application rate of active ingredients, method of application, area treated, amount applied; and the name and state license number of the state certified applicator shall be included.

SD-19 Operation and Maintenance Manuals

Maintenance Instructions; FIO.

Instruction for year-round care of installed plant material and planting bed maintenance required including watering, pruning, and fertilization.

1.3 SOURCE INSPECTIONS

The nursery or source of plant material and the source of delivered topsoil shall be subject to inspection.

1.4 DELIVERY, INSPECTION, STORAGE, AND HANDLING

1.4.1 Delivery

A delivery schedule shall be provided at least 10 calendar days prior to the first day of delivery.

1.4.1.1 Plant Material Identification

Plant material shall be identified with attached, durable, waterproof labels and weather-resistant ink, stating the correct botanical plant name and size.

1.4.1.2 Protection During Delivery

Plant material shall be protected during delivery to prevent desiccation and damage to the branches, trunk, root system, or earth ball. Branches shall be protected by tying-in. Exposed branches shall be covered during transport.

1.4.1.3 Delivered Topsoil

Prior to the delivery of any topsoil, the availability of topsoil shall be verified in paragraph TOPSOIL. A soil test shall be provided for delivered topsoil.

1.4.1.4 Soil Amendments

Soil amendments shall be delivered to the site in the original, unopened containers bearing the manufacturer's chemical analysis. In lieu of containers, soil amendments may be furnished in bulk. A chemical analysis shall be provided for bulk deliveries.

1.4.1.5 Pesticide Material

Pesticide material shall be delivered to the site in the original, unopened containers bearing legible labels indicating the Environmental Protection Agency (EPA) registration number and the manufacturer's registered uses.

1.4.2 Inspection

Plant material shall be well shaped, vigorous and healthy with a healthy, well branched root system, free from disease, harmful insects and insect eggs, sun-scald injury, disfigurement or abrasion. Plant material shall be checked for unauthorized substitution and to establish nursery grown status. Plant material showing desiccation, abrasion, sun-scald injury, disfigurement, or unauthorized substitution shall be rejected. The plant material shall exhibit typical form of branch to height ratio; and meet the caliper and height measurements specified. Plant material that measures less than specified, or has been poled, topped off or headed back, shall be rejected. Container-grown plant material shall show new fibrous roots and the root mass shall contain its shape when removed from the container. Plant material with broken or cracked balls; or broken containers shall be rejected. Bare-root plant material that is not

dormant or is showing roots were pulled from the ground shall be rejected. Other materials shall be inspected for compliance with paragraph PRODUCTS. Open soil amendment containers or wet soil amendments shall be rejected. Topsoil that contains slag, cinders, stones, lumps of soil, sticks, roots, trash or other material larger than 40 mm diameter shall be rejected. Topsoil that contains viable plant material and plant parts shall be rejected. Unacceptable material shall be removed from the job site.

1.4.3 Storage

1.4.3.1 Plant Material Storage

Plant material not installed on the day of arrival at the site shall be stored and protected in designated areas. Plant material shall not be stored longer than 30 days. Plant material shall be protected from direct exposure to wind and sun. Bare-root plant material shall be heeled-in. All plant material shall be kept in a moist condition by watering with a fine mist spray until installed.

1.4.3.2 Other Material Storage

Storage of other material shall be in designated areas. Soil amendments shall be stored in dry locations and away from contaminants. Chemical treatment material shall be stored according to manufacturer's instructions and not with planting operation material.

1.4.4 Handling

Plant material shall not be injured in handling. Cracking or breaking the earth ball of balled and burlapped plant material shall be avoided. Plant material shall not be handled by the trunk or stems. Materials shall not be dropped from vehicles.

1.4.5 Time Limitation

Except for container-grown plant material, the time limitation from digging to installing plant material shall be a maximum 90 days. The time limitation between installing the plant material and placing the mulch shall be a maximum 24 hours.

1.5 WARRANTY

Furnished plant material shall have a warranty for plant growth to be in a vigorous growing condition for a minimum 12 month period. A minimum 12 month calendar time period for the warranty of plant growth shall be provided regardless of the contract time period. When plant material is determined to be unhealthy in accordance with paragraph PLANT ESTABLISHMENT PERIOD, it shall be replaced once under this warranty.

PART 2 PRODUCTS

2.1 PLANT MATERIAL

2.1.1 Plant Material Classification

The plant material shall be nursery grown stock conforming to ANLA ANSI/ANLA Z60.1 and shall be the species specified.

2.1.2 Plant Schedule

The plant schedule shall provide botanical names as included in one or more of the publications listed under "Nomenclature" in ANLA ANSI/ANLA Z60.1.

2.1.3 Substitutions

Substitutions will not be permitted without written request and approval from the Contracting Officer.

2.1.4 Quality

Well shaped, well grown, vigorous plant material having healthy and well branched root systems in accordance with ANLA ANSI/ANLA Z60.1 shall be provided. Plant material shall be provided free from disease, harmful insects and insect eggs, sun-scald injury, disfigurement and abrasion. Plant material shall be free of shock or damage to branches, trunk, or root systems, which may occur from the digging and preparation for shipment, method of shipment, or shipment. Plant quality is determined by the growing conditions; method of shipment to maintain health of the root system; and growth of the trunk and crown as follows.

2.1.5 Growing Conditions

Plant material shall be native to or well-suited to the growing conditions of the project site. Plant material shall be grown under climatic conditions similar to those at the project site.

2.1.6 Method of Shipment to Maintain Health of Root System

2.1.6.1 Balled and Burlapped (BB) Plant Material

Ball size and ratio shall be in accordance with ANLA ANSI/ANLA Z60.1. The ball shall be of a diameter and depth to encompass enough fibrous and feeding root system necessary for the full recovery of the plant. The plant stem or trunk shall be centered in the ball. All roots shall be clean cut at the ball surface. Roots shall not be pulled from the ground. Before shipment the root ball shall be dipped in gels containing mycorrhizal fungi inoculum. The root ball shall be completely wrapped with burlap or other suitable material and securely laced with biodegradable twine.

2.1.6.5 Container-Grown (C) Plant Material

Container size shall be in accordance with ANLA ANSI/ANLA Z60.1. Plant material shall be grown in a container over a duration of time for new fibrous roots to have developed and for the root mass to retain its shape and hold together when removed from the container. Container-grown plant material shall be inoculated with mycorrhizal fungi during germination in the nursery. Before shipment the root system shall be dipped in gels containing mycorrhizal fungi inoculum. The container shall be sufficiently rigid to hold ball shape and protect root mass during shipping.

2.1.7 Growth of Trunk and Crown

2.1.7.1 Deciduous Trees

A height to caliper relationship shall be provided in accordance with ANLA ANSI/ANLA Z60.1. Height of branching shall bear a relationship to the size and species of tree specified and with the crown in good balance with the trunk. The trees shall not be "poled" or the leader removed.

a. Single stem: The trunk shall be reasonably straight and symmetrical with crown and have a persistent main leader.

b. Multi-stem: All countable stems, in aggregate, shall average the size specified. To be considered a stem, there shall be no division of the trunk which branches more than 150 mm from ground level.

c. Specimen: The tree provided shall be well branched and pruned naturally according to the species. The form of growth desired, which may not be in accordance with natural growth habit, shall be as indicated.

of determining plant health.

2.1.7.3 Deciduous Shrubs

Deciduous shrubs shall have the height and number of primary stems recommended by ANLA ANSI/ANLA Z60.1. Acceptable plant material shall be well shaped, with sufficient well-spaced side branches, and recognized by the trade as typical for the species grown in the region of the project.

2.1.7.4 Coniferous Evergreen Plant Material

Coniferous Evergreen plant material shall have the height-to-spread ratio recommended by ANLA ANSI/ANLA Z60.1. The coniferous evergreen trees shall not be "poled" or the leader removed. Acceptable plant material shall be exceptionally heavy, well shaped and trimmed to form a symmetrical and tightly knit plant. The form of growth desired shall be as indicated.

2.1.7.5 Broadleaf Evergreen Plant Material

Broadleaf evergreen plant material shall have the height-to-spread ratio recommended by ANLA ANSI/ANLA Z60.1. Acceptable plant material shall be well shaped and recognized by the trade as typical for the variety grown in the region of the project.

2.1.7.6 Ground Cover and Vine Plant Material

Ground cover and vine plant material shall have the minimum number of runners and length of runner recommended by ANLA ANSI/ANLA Z60.1. Plant material shall have heavy, well developed and balanced crown with vigorous, well developed root system and shall be furnished in containers.

2.1.8 Plant Material Size

Plant material shall be furnished in sizes indicated. Plant material larger in size than specified may be provided at no additional cost to the Government.

2.1.9 Plant Material Measurement

Plant material measurements shall be in accordance with ANLA ANSI/ANLA Z60.1.

2.2 TOPSOIL

Topsoil shall be as defined in SECTION 02922 SODDING.

2.3 SOIL AMENDMENTS

Soil amendments shall consist of pH adjuster, fertilizer, organic material and soil conditioners meeting the following requirements. Vermiculite is not recommended.

2.3.1 pH Adjuster

The pH adjuster shall be an agricultural liming material in accordance with ASTM C 602. These materials may be burnt lime, hydrated lime, ground limestone, or shells. The pH adjuster shall be used to create a favorable soil pH for the plant material specified.

2.3.1.1 Limestone

Limestone material shall contain a minimum calcium carbonate equivalent of 80 percent. Gradation: A minimum 95 percent shall pass through a 2.36 mm sieve and a minimum 55 percent shall pass through a 0.25 mm sieve. To raise soil pH, ground limestone shall be used.

2.3.1.2 Hydrated Lime

Hydrated lime shall contain a minimum calcium carbonate equivalent of 110 percent. Gradation: A minimum 100 percent shall pass through a 2.36 mm sieve and a minimum 97 percent shall pass through a 0.25 mm sieve.

2.3.1.3 Burnt Lime

Burnt lime shall contain a minimum calcium carbonate equivalent of 140 percent. Gradation: A minimum 95 percent shall pass through a 2.36 mm sieve and a minimum 35 percent shall pass through a 0.25 mm sieve.

2.3.2 Fertilizer

The nutrients ratio shall be 20 percent nitrogen, 10 percent phosphorus, and 5 percent potassium. Fertilizer shall be controlled release commercial grade; free flowing, pellet or tablet form; uniform in composition; and consist of a nitrogen-phosphorus-potassium ratio. The fertilizer shall be derived from sulphur coated urea, urea formaldehyde, plastic or polymer coated pills, or isobutylenediurea (IBDU). Fertilizer shall be balanced with the inclusion of trace minerals and micro-nutrients.

2.3.3 Organic Material

Organic material shall consist of either bonemeal, peat, rotted manure, decomposed wood derivatives, recycled compost, or worm castings.

2.3.3.1 Bonemeal

Bonemeal shall be a finely ground, steamed bone product containing from 2 to 4 percent nitrogen and 16 to 40 percent phosphoric acid.

2.3.3.2 Rotted Manure

Rotted manure shall be unleached horse, chicken, or cattle manure containing a maximum 25 percent by volume of straw, sawdust, or other bedding materials. Manure shall contain no chemicals or ingredients harmful to plants. The manure shall be heat treated to kill weed seeds and shall be free of stones, sticks, and soil.

2.3.3.3 Decomposed Wood Derivatives

Decomposed wood derivatives shall be ground bark, sawdust, or other wood waste material free of stones, sticks, and toxic substances harmful to plants, and stabilized with nitrogen.

2.3.3.4 Recycled Compost

Compost shall be a well decomposed, stable, weed free organic matter source. It shall be derived from food, agricultural, or industrial residuals; biosolids (treated sewage sludge); yard trimmings; or source-separated or mixed solid waste. The compost shall possess no objectionable odors and shall not resemble the raw material from which it was derived. The material shall not contain substances toxic to plants. Gradation: The compost material shall pass through a 10 mm screen, possess a pH of 5.5 to 8.0, and have a moisture content between 35-55 percent by weight. The material shall not contain more than 1 percent or less by weight of man-made foreign matter. Compost shall be cleaned of plastic materials larger than 50 mm in length.

2.3.3.5 Worm Castings

Worm castings shall be screened from worms and food source and shall be commercially packaged.

2.3.4 Soil Conditioner

Soil conditioner shall be sand, super absorbent polymers, calcined clay, or gypsum for single use or in combination to meet topsoil requirements for the plant material specified.

2.3.4.1 Sand

Sand shall be clean and free of toxic materials. Gradation: A minimum 95 percent by weight shall pass a 2 mm sieve and a minimum 10 percent by weight shall pass a 1.18 mm sieve. Greensand shall be balanced with the inclusion of trace minerals and nutrients.

2.3.4.2 Super Absorbent Polymers

To improve water retention in soils, super absorbent polymers shall be sized according to manufacturer's recommendations. Polymers shall be added as a soil amendment and be cross-linked polyacrylamide with an absorption capacity of 250-400 times its weight.

2.3.4.3 Calcined Clay

Granular particles shall be produced from montmorillonite clay calcined to minimum temperature of 650 degrees C. Gradation: A minimum 90 percent passing 2.36 mm sieve; a minimum 99 percent shall be retained on 0.25 mm sieve; and a maximum 2 percent shall pass a 0.15 mm sieve. Bulk density: A maximum 640 kilogram per cubic meter .

2.3.4.4 Gypsum

Gypsum shall be commercially packaged, free flowing, and a minimum 95 percent calcium sulfate by volume.

2.4 MULCH

Mulch shall be free from weeds, mold, and other deleterious materials. Mulch materials shall be native to the region. Rotted manure is not recommended to be used as a mulch because it would encourage surface rooting of the plant material and weeds.

2.4.1 Inorganic Mulch

When inorganic mulch is required for decorative purposes, it shall be provided in areas designated, and consist of:

a. Rock mulch materials shall be washed riverbank stone ranging in size from 38mm to 50mm.

2.4.2 Organic Mulch

Organic mulch materials shall be ground or shredded bark mulch ranging in size from 25mm to 38mm. Locally chipped or ground material shall be treated to retard the growth of mold and fungi.

2.5 GEOTEXTILE

Geotextile shall be woven or nonwoven; polypropylene, polyester, or fiberglass, mat in accordance with ASTM D 5034 or ASTM D 5035. It shall be made specifically for use as a fabric around plant material. Nominal weight shall be a minimum 120 grams per square meter . Permeability rate shall be a minimum 1 mm per second.

2.6 WOOD STAKING MATERIAL

Wood stakes shall be hardwood or fir; rough sawn; free from knots, rot, cross grain, or other defects that would impair their strength.

2.6.1 Bracing Stake

Wood bracing stakes shall be a minimum 50 x 50 mm square and a minimum 2400 mm long with a point at one end. Stake shall be set without damaging rootball.

2.6.2 Wood Ground Stakes

Wood ground stakes shall be a minimum of 50 x 50 mm square and a minimum 900 mm long with a point at one end.

2.6.3 Deadmen

Wood deadmen shall be a minimum 100 x 100 x 900 mm long.

2.7 METAL STAKING AND GUYING MATERIAL

Metal shall be aluminum or steel consisting of recycled content made for holding plant material in place.

2.7.1 Bracing Stakes

Metal bracing stakes shall be a minimum 25 mm diameter and a minimum 2400 mm long. Stake shall be set without damaging rootball.

2.7.2 Metal Ground Stakes

Metal ground stakes shall be a minimum 13 mm diameter and a minimum 900 mm long.

2.7.3 Earth Anchor

Metal earth anchors shall be a minimum 13 mm diameter and a minimum 600 mm long.

2.7.4 Guying Material

Metal guying material shall be a minimum 12 gauge wire. Multi-strand cable shall be woven wire. Guying material tensile strength shall conform to the size of tree to be held firmly in place.

2.7.5 Turnbuckle

Metal turnbuckles shall be galvanized or cadmium-plated steel, and shall be a minimum 75 mm long with closed screw eyes on each end. Screw thread tensile strength shall conform to the size of tree to be held firmly in place.

2.8 PLASTIC STAKING AND GUYING MATERIAL

Plastic shall consist of recycled plastic product made for holding plant material firmly in place. Plastic shall not be used for deadmen.

2.8.1 Plastic Bracing Stake

Plastic bracing stakes shall be a minimum 50 mm diameter and a minimum 2400 mm long. Stake shall be set without damaging rootball.

2.8.2 Plastic Ground Stakes

Plastic ground stakes shall be a minimum 50 mm diameter and a minimum 900 mm long.

2.8.3 Plastic Guying Material

Plastic guying material shall be designed specifically for the purpose of firmly holding plant material in high wind velocities.

2.8.4 Chafing Guard

Plastic chafing guards shall be used to protect tree trunks and branches when metal is used as guying material. The material shall be the same color throughout the project site. Length shall be a minimum 1.5 times the circumference of the plant trunk at its base.

2.9 RUBBER GUYING MATERIAL

Rubber chafing guards, consisting of recycled material, shall be used to protect tree trunks and branches when metal guying material is applied. The material shall be the same color throughout the project. Length shall be a minimum 1.5 times the circumference of the plant trunk at its base.

2.10 FLAG

Plastic flag material shall be used on guying material. It shall be a minimum 150 mm long. Tape color shall be consistent and visually complimentary to the entire project area. The tape color shall meet pedestrian visual safety requirements for day and night.

2.12 MYCORRHIZAL FUNGI INOCULUM

Mycorrhizal fungi inoculum shall be composed of multiple-fungus inoculum as recommended by the manufacturer for the plant material specified.

2.13 WATER

Unless otherwise directed, water shall be the responsibility of the Contractor. Water shall not contain elements toxic to plant life.

2.14 PESTICIDE

Pesticide shall be insecticide, herbicide, fungicide, nematocide, rodenticide or miticide. For the purpose of this specification a soil fumigant shall have the same requirements as a pesticide. The pesticide material shall be EPA registered and approved.

2.15 LANDSCAPE ROCKS

Rock for aesthetic use in the landscaping shall be existing rocks currently located along ‘C’ and ‘D’St. stockpiled for reuse. Existing rocks vary in size as indicated on the drawings.

PART 3 EXECUTION

3.1 INSTALLING PLANT MATERIAL TIME AND CONDITIONS

3.1.1 Deciduous Plant Material Time

Deciduous plant material shall be installed from 1 September to 30 May.

3.1.2 Evergreen Plant Material Time

Evergreen plant material shall be installed from 1 September to 30 May.

3.1.3 Plant Material Conditions

Planting operations shall be performed only during periods when beneficial results can be obtained. When drought, excessive moisture, frozen ground or other unsatisfactory conditions prevail, the work shall be stopped when directed. When special conditions warrant a variance to the planting operations, proposed planting times shall be submitted for approval.

3.1.4 Tests

3.1.4.1 Percolation Test

Test for percolation shall be done to determine positive drainage of plant pits and beds. A positive percolation shall consist of a minimum 25 mm per 3 hours; when a negative percolation test occurs, a shop drawing shall be submitted indicating the corrective measures.

3.1.4.2 Soil Test

Delivered topsoil, excavated plant pit soil, and stockpiled topsoil shall be tested in accordance with ASTM D 5268 and ASTM D 4972 for determining the particle size, pH, organic matter content, textural class, chemical analysis, soluble salts analysis, and mechanical analysis. Sample collection onsite shall be random over the entire site. Sample collection for stockpiled topsoil shall be at different levels in the stockpile. The soil shall be free from debris, noxious weeds, toxic substances, or other materials harmful to plant growth. The test shall determine the quantities and type of soil amendments required to meet local growing conditions for the plant material specified.

3.2 SITE PREPARATION

3.2.1 Finished Grade, Topsoil and Underground Utilities

The Contractor shall verify that finished grades are as indicated on drawings, and that the placing of topsoil, the smooth grading, and the compaction requirements have been completed in accordance with SECTION 02922 SODDING, prior to the commencement of the planting operation. The location of

underground utilities and facilities in the area of the planting operation shall be verified. Damage to underground utilities and facilities shall be repaired at the Contractor's expense.

3.2.2 Layout

Plant material locations and bed outlines shall be staked on the project site before any excavation is made. Plant material locations may be adjusted to meet field conditions.

3.2.3 Protecting Existing Vegetation

When there are established lawns in the planting area, the turf shall be covered and/or protected during planting operations. Existing trees, shrubs, and plant beds that are to be preserved shall be barricaded along the dripline to protect them during planting operations.

3.3 EXCAVATION

3.3.1 Obstructions Below Ground

When obstructions below ground affect the work, shop drawings showing proposed adjustments to plant material location, type of plant and planting method shall be submitted for approval.

3.3.2 Turf Removal

Where the planting operation occurs in an existing lawn area, the turf shall be removed from the excavation area to a depth that will ensure the removal of the entire root system.

3.3.3 Plant Pits

Plant pits for ball and burlapped or container plant material shall be dug to a depth equal to the height of the root ball as measured from the base of the ball to the base of the plant trunk. Plant pits for bare-root plant material shall be dug to a depth equal to the height of the root system. Plant pits shall be dug a minimum 50 percent wider than the ball or root system to allow for root expansion. The pit shall be constructed with sides sloping towards the base as a cone, to encourage well aerated soil to be available to the root system for favorable root growth. Cylindrical pits with vertical sides shall not be used.

3.4 INSTALLATION

3.4.1 Setting Plant Material

Plant material shall be set plumb and held in position until sufficient soil has been firmly placed around root system or ball. In relation to the surrounding grade, the plant material shall be set even with the grade at which it was grown.

3.4.3 Backfill Soil Mixture

The backfill soil mixture may be a mix of ½ topsoil and ½ excavated existing soil and shall include required soil amendments suitable for the plant material specified.

3.4.4 Adding Mycorrhizal Fungi Inoculum

Mycorrhizal fungi inoculum shall be added as recommended by the manufacturer for the plant material specified.

3.4.5 Backfill Procedure

Prior to backfilling, all metal, wood, synthetic products, or treated burlap devices shall be removed from the ball or root system avoiding damage to the root system. The backfill procedure shall remove air pockets from around the root system. Additional requirements are as follows.

3.4.5.1 Balled and Burlapped Plant Material

Biodegradable burlap and tying material shall be carefully opened and folded back from the top a minimum 1/3 depth from the top of the root ball. Backfill mixture shall be added to the plant pit in 150 mm layers with each layer tamped.

3.4.5.3 Container-Grown Plant Material

The plant material shall be carefully removed from containers that are not biodegradeable. Prior to setting the plant in the pit, a maximum 1/4 depth of the root mass, measured from the bottom, shall be spread apart to promote new root growth. For plant material in biodegradable containers the container shall be split prior to setting the plant with container. Backfill mixture shall be added to the plant pit in 150 mm layers with each layer tamped.

3.4.5.4 Earth Berm

An earth berm, consisting of backfill soil mixture, shall be formed with a minimum 100 mm height around the edge of the plant pit to aid in water retention and to provide soil for settling adjustments.

3.4.6 Plant Bed

Plant material shall be set in plant beds according to the drawings. Backfill soil mixture shall be placed on previously scarified subsoil to completely surround the root balls, and shall be brought to a smooth and even surface, blending to existing areas. Earth berms shall be provided. Polymers shall be spread uniformly over the plant bed and in the planting pit as recommended by the manufacturer and thoroughly incorporated into the soil to a maximum 100 mm depth.

3.4.7 Watering

Plant pits and plant beds shall be watered immediately after backfilling, until completely saturated.

3.4.8 Staking and Guying

Staking will be required when trees are unstable or will not remain set due to their size, shape, or exposure to high wind velocity.

3.4.8.1 One Bracing Stake

Trees 1200 to 1800 mm high shall be firmly anchored in place with one bracing stake. The bracing stake shall be placed on the side of the tree facing the prevailing wind. The bracing stake shall be driven vertically into firm ground and shall not injure the ball or root system. The tree shall be held firmly to the stake with a double strand of guying material. The guying material shall be firmly anchored at a minimum 1/2 tree height and shall prevent girdling. A chafing guard shall be used when metal is the guying material.

3.4.8.2 Two Bracing Stakes

Trees from 1800 to 2400 m height shall be firmly anchored in place with 2 bracing stakes placed on opposite sides. Bracing stakes shall be driven vertically into firm ground and shall not injure the ball or root system. The tree shall be held firmly between the stakes with a double strand of guying material. The guying material shall be firmly anchored at a minimum 1/2 tree height and shall prevent girdling. Chafing guards shall be used when metal is the guying material.

3.4.8.3 Three Ground Stakes

Trees over a minimum 2400 mm height and less than a maximum 150 mm caliper shall be held firmly in place with 3 bracing or ground stakes spaced equidistantly around the tree. Ground stakes shall be avoided in areas to be mowed. Stakes shall be driven into firm ground outside the earth berm. The guying material shall be firmly anchored at a minimum 1/2 tree height and shall prevent girdling. For trees over maximum 75 mm diameter at breast height, turnbuckles shall be used on the guying material for tree straightening purposes. One turnbuckle shall be centered on each guy line. Chafing guards shall be used when metal is the guying material.

3.4.9 Deadmen or Earth Anchors

Trees over a minimum 150 mm caliper shall be held firmly in place with wood deadmen buried a minimum 900 mm in the ground or metal earth anchors. Multi-strand cable guying material shall be firmly anchored at a minimum 1/2 tree height and shall prevent girdling. Turnbuckles shall be used on the guying material for tree straightening purposes. One turnbuckle shall be centered on each guy line. Chafing guards shall be used.

3.4.10 Flags

A flag shall be securely fastened to each guy line equidistant between the tree and the stake, deadmen, or earth anchor. The flag shall be visible to pedestrians.

3.5 FINISHING

3.5.1 Plant Material

Prior to placing mulch, the installed area shall be uniformly edged to provide a clear division line between the planted area and the adjacent turf area, shaped as indicated. The installed area shall be raked and smoothed while maintaining the earth berms.

3.5.2 Placing Geotextile

Prior to placing mulch, geotextile shall be placed as indicated in accordance with the manufacturer's recommendations.

3.5.3 Placing Mulch

The placement of mulch shall occur a maximum 48 hours after planting. Mulch, used to reduce soil water loss, regulate soil temperature and prevent weed growth, shall be spread to cover the installed area with a minimum 100 mm uniform thickness. Mulch shall be kept out of the crowns of shrubs, ground cover, and vines and shall be kept off buildings, sidewalks and other facilities.

3.5.4 Pruning

Pruning shall be accomplished by trained and experienced personnel. The pruning of trees and palms shall be in accordance with ANSI A300. Only dead or broken material shall be pruned from installed plants. The typical growth habit of individual plant material shall be retained. Clean cuts shall be made flush with the parent trunk. Improper cuts, stubs, dead and broken branches shall be removed. "Headback" cuts at right angles to the line of growth will not be permitted. Trees shall not be poled or the leader removed, nor shall the leader be pruned or "topped off".

3.6 MAINTENANCE DURING PLANTING OPERATION

Installed plant material shall be maintained in a healthy growing condition. Maintenance operations shall begin immediately after each plant is installed to prevent desiccation and shall continue until the plant establishment period commences. Installed areas shall be kept free of weeds, grass, and other undesired vegetation. The maintenance includes maintaining the mulch, watering, and adjusting settling.

3.7 APPLICATION OF PESTICIDE

When application of a pesticide becomes necessary to remove a pest or disease, a pesticide treatment plan shall be submitted and coordinated with the installation pest management program.

3.7.1 Technical Representative

The certified installation pest management coordinator shall be the technical representative, and shall be present at all meetings concerning treatment measures for pest or disease control. They may be present during treatment application.

3.7.2 Application

A state certified applicator shall apply required pesticides in accordance with EPA label restrictions and recommendations. Clothing and personal protective equipment shall be used as specified on the pesticide label. A closed system is recommended as it prevents the pesticide from coming into contact with the applicator or other persons. Water for formulating shall only come from designated locations. Filling hoses shall be fitted with a backflow preventer meeting local plumbing codes or standards. Overflow shall be prevented during the filling operation. Prior to each day of use, the equipment used for applying pesticide shall be inspected for leaks, clogging, wear, or damage. Any repairs are to be performed immediately.

3.8 LANDSCAPE ROCKS

Rock placement locations shall be as shown on the landscape plans. Rocks shall be installed by persons experience in the handling of large scale rocks, and with equipment specific for such tasks. Extreme care shall be taken to prevent damage to surrounding facilities, walls, pavements, landscaping and irrigation systems. Notify the Contracting Officer 48 hours prior to placement of rocks. Placement shall be executed only in the presence of the Contracting Officer.

3.9 RESTORATION AND CLEAN UP

3.9.1 Restoration

Turf areas, pavements and facilities that have been damaged from the planting operation shall be restored to original condition at the Contractor's expense.

3.9.2 Clean Up

Excess and waste material shall be removed from the installed area and shall be disposed offsite. Adjacent paved areas shall be cleared.

3.10 PLANT ESTABLISHMENT PERIOD

3.10.1 Commencement

Upon completion of the last day of the planting operation, the plant establishment period for maintaining installed plant material in a healthy growing condition shall commence and shall be in effect for 12 months. Written calendar time period shall be furnished for the plant establishment period. When there is more than one plant establishment period, the boundaries of the planted area covered for each period shall be described. The plant establishment period shall be coordinated with SECTION 02922 SODDING. The plant establishment period shall be modified for inclement weather shut down periods, or for separate completion dates for areas.

3.10.2 Maintenance During Establishment Period

Maintenance of plant material shall include straightening plant material, straightening stakes; tightening guying material; correcting girdling; supplementing mulch; pruning dead or broken branch tips; maintaining plant material labels; watering; eradicating weeds, insects and disease; post-fertilization; and removing and replacing unhealthy plants.

3.10.2.1 Watering Plant Material

The plant material shall be watered as necessary to prevent desiccation and to maintain an adequate supply of moisture within the root zone. An adequate supply of moisture is estimated to be the equivalent of 25 mm absorbed water per week, delivered in the form of rain or augmented by watering. Run-off, puddling and wilting shall be prevented. Unless otherwise directed, watering trucks shall not be driven over turf areas. Watering of other adjacent areas or existing plant material shall be prevented.

3.10.2.2 Weeding

Grass and weeds in the installed areas shall not be allowed to reach a maximum 75 mm height before being completely removed, including the root system.

3.10.2.3 Pesticide Treatment

Treatment for disease or pest shall be in accordance with paragraph APPLICATION OF PESTICIDE.

3.10.2.4 Post-Fertilization

The plant material shall be topdressed at least once during the period of establishment with controlled release fertilizer, reference paragraph SOIL AMENDMENTS. Apply at the rate of 1 kilogram per 10 square meters of plant pit or bed area. Dry fertilizer adhering to plants shall be flushed off. The application shall be timed prior to the advent of winter dormancy.

3.10.2.5 Plant Pit Settling

When settling occurs to the backfill soil mixture, additional backfill soil shall be added to the plant pit or plant bed until the backfill level is equal to the surrounding grade. Serious settling that affects the setting of the plant in relation to the maximum depth at which it was grown requires replanting in accordance with paragraph INSTALLATION. The earth berm shall be maintained.

3.10.2.6 Maintenance Record

A record shall be furnished describing the maintenance work performed, the quantity of plant losses, diagnosis of the plant loss, and the quantity of replacements made on each site visit.

3.10.3 Unhealthy Plant Material

A tree shall be considered unhealthy or dead when the main leader has died back, or up to a maximum 25 percent of the crown has died. A shrub shall be considered unhealthy or dead when up to a maximum 25 percent of the plant has died. This condition shall be determined by scraping on a branch an area 2 mm square, maximum, to determine if there is a green cambium layer below the bark. The Contractor shall determine the cause for unhealthy plant material and shall provide recommendations for replacement. Unhealthy or dead plant material shall be removed immediately and shall be replaced as soon as seasonal conditions permit.

3.10.4 Replacement Plant Material

Unless otherwise directed, plant material shall be provided for replacement in accordance with paragraph PLANT MATERIAL. Replacement plant material shall be installed in accordance with paragraph INSTALLATION, and recommendations in paragraph PLANT ESTABLISHMENT PERIOD. Plant material shall be replaced in accordance with paragraph WARRANTY. An extended plant establishment period shall not be required for replacement plant material.

3.10.5 Maintenance Instructions

Written instructions shall be furnished containing drawings and other necessary information for year-round care of the installed plant material; including, when and where maintenance should occur, and the procedures for plant material replacement.

3.10.6 Removal of Guying and Staking

Guying and staking materials on trees, including stakes, wires, rubberhose, and trunk wrap material shall be completely removed and disposed of by the Contractor at the end of the establishment period and prior to final acceptance.

END OF SECTION

SECTION 03100

STRUCTURAL CONCRETE FORMWORK

PART 1 GENERAL

1.1 REFERENCES

The publications listed below form a part of this specification to the extent referenced. The publications are referred to in the text by basic designation only.

ACI INTERNATIONAL (ACI)

ACI 347R	(1994) Guide to Formwork for Concrete

AMERICAN HARDBOARD ASSOCIATION (AHA)

AHA ANSI/AHA A135.4	(1995) Basic Hardboard

AMERICAN SOCIETY FOR TESTING AND MATERIALS (ASTM)

ASTM C 578	(1995) Rigid, Cellular Polystyrene Thermal Insulation

DEPARTMENT OF COMMERCE (DOC)

DOC PS 1	(1996) Voluntary Product Standard - Construction and Industrial Plywood

1.2 SUBMITTALS

Government approval is required for submittals with a "GA" designation; submittals having an "FIO" designation are for information only. The following shall be submitted in accordance with SECTION 01330 SUBMITTAL PROCEDURES:

SD-01 Data

Design; FIO.

Design analysis and calculations for form design and methodology used in the design.

Form Materials; FIO.

Manufacturer's data including literature describing form materials, accessories, and form releasing agents.

SD-04 Drawings

Concrete Formwork; FIO.

Drawings showing details of formwork, including dimensions of fiber voids, joints, supports, studding and shoring, and sequence of form and shoring removal.

SD-06 Instructions

Form Releasing Agents; FIO.

Manufacturer's recommendation on method and rate of application of form releasing agents.

SD-13 Certificates

Fiber Voids; FIO.

Certificates attesting that fiber voids conform to the specified requirements.

SD-14 Samples

Fiber Voids; FIO.

One sample unit of fiber voids prior to installation of the voids.

1.3 DESIGN

Formwork shall be designed in accordance with methodology of ACI 347R for anticipated loads, lateral pressures, and stresses. Forms shall be capable of producing a surface which meets the requirements of the class of finish specified in SECTION 03300 CAST-IN-PLACE STRUCTURAL CONCRETE. Forms shall be capable of withstanding the pressures resulting from placement and vibration of concrete.

1.4 STORAGE AND HANDLING

Fiber voids shall be stored above ground level in a dry location. Fiber voids shall be kept dry until installed and overlaid with concrete.

PART 2 PRODUCTS

2.1 FORM MATERIALS

2.1.1 Forms For Class A and Class B Finish

Forms for Class A and Class B finished surfaces shall be plywood panels conforming to DOC PS 1, Grade B-B concrete form panels, Class I or II. Other form materials or liners may be used provided the

smoothness and appearance of concrete produced will be equivalent to that produced by the plywood concrete form panels. Forms for round columns shall be the prefabricated seamless type.

2.1.2 Forms For Class C Finish

Forms for Class C finished surfaces shall be shiplap lumber; plywood conforming to DOC PS 1, Grade B-B concrete form panels, Class I or II; tempered concrete form hardboard conforming to AHA ANSI/AHA A135.4; other approved concrete form material; or steel, except that steel lining on wood sheathing shall not be used. Forms for round columns may have one vertical seam.

2.1.3 Forms For Class D Finish

Forms for Class D finished surfaces, except where concrete is placed against earth, shall be wood or steel or other approved concrete form material.

2.1.4 Retain-In-Place Metal Forms

Retain-in-place metal forms for concrete slabs and roofs shall be as specified in SECTION 05300 STEEL DECKING.

2.1.5 Pan-Form Units

Pan-form units for one-way or two-way concrete joist and slab construction shall be factory-fabricated units of the approximate section indicated. Units shall consist of steel or molded fiberglass concrete form pans. Closure units shall be furnished as required.

2.1.6 Form Ties

Form ties shall be factory-fabricated metal ties, shall be of the removable or internal disconnecting or snap-off type, and shall be of a design that will not permit form deflection and will not spall concrete upon removal. Solid backing shall be provided for each tie. Except where removable tie rods are used, ties shall not leave holes in the concrete surface less than 6 mm nor more than 25 mm deep and not more than 25 mm in diameter. Removable tie rods shall be not more than 38 mm in diameter.

2.1.7 Form Releasing Agents

Form releasing agents shall be commercial formulations that will not bond with, stain or adversely affect concrete surfaces. Agents shall not impair subsequent treatment of concrete surfaces depending upon bond or adhesion nor impede the wetting of surfaces to be cured with water or curing compounds.

2.1.8 Fiber Voids

Fiber voids shall be the product of a reputable manufacturer regularly engaged in the commercial production of fiber voids. The voids shall be constructed of double faced, corrugated fiberboard. The corrugated fiberboard shall be fabricated of paper liners, impregnated with paraffin, and laminated with moisture resistant adhesive, and shall have a board strength of 20 kg per square centimeter. Voids which are impregnated with paraffin after construction, in lieu of being constructed with paraffin impregnated fiberboard, are acceptable. Voids shall be designed to support not less than 4900 kg per square meter. To prevent separation during concrete placement fiber voids shall be assembled with steel or plastic

banding at 1.22 meters on center maximum, or by adequate stapling or gluing as recommended by the manufacturer. Fiber voids placed under concrete slabs and that are 200 mm in depth may be heavy duty "waffle box" type, constructed of paraffin impregnated corrugated fiberboard.

2.2 FIBER VOID RETAINERS

2.2.1 Polystyrene Rigid Insulation

Polystyrene rigid insulation shall conform to ASTM C 578, Type V, VI, or VII, square edged. Size shall be 38 mm thick by 400 mm in height by 1 meter in length, unless otherwise indicated.

2.2.2 Precast Concrete

Precast concrete units shall have a compressive strength of not less than 17 MPa, reinforced with 150 mm by 150 mm by W1.4 WWF wire mesh, and 300 mm (height) by 1 m (length) by 40 mm (thickness) in size unless otherwise indicated.

PART 3 EXECUTION

3.1 INSTALLATION

3.1.1 Formwork

Forms shall be mortar tight, properly aligned and adequately supported to produce concrete surfaces meeting the surface requirements specified in SECTION 03300 CAST-IN-PLACE STRUCTURAL CONCRETE and conforming to construction tolerance given in TABLE 1. Where concrete surfaces are to have a Class A or Class B finish, joints in form panels shall be arranged as approved. Where forms for continuous surfaces are placed in successive units, the forms shall fit over the completed surface to obtain accurate alignment of the surface and to prevent leakage of mortar. Forms shall not be reused if there is any evidence of surface wear and tear or defects which would impair the quality of the surface. Surfaces of forms to be reused shall be cleaned of mortar from previous concreting and of all other foreign material before reuse. Form ties that are to be completely withdrawn shall be coated with a nonstaining bond breaker.

3.2 CHAMFERING

Except as otherwise shown, external corners that will be exposed shall be chamfered, beveled, or rounded by moldings placed in the forms.

3.3 COATING

Forms for Class A and Class B finished surfaces shall be coated with a form releasing agent before the form or reinforcement is placed in final position. The coating shall be used as recommended in the manufacturer's printed or written instructions. Forms for Class C and D finished surfaces may be wet with water in lieu of coating immediately before placing concrete, except that in cold weather with probable freezing temperatures, coating shall be mandatory. Surplus coating on form surfaces and coating on reinforcing steel and construction joints shall be removed before placing concrete.

3.4 REMOVAL OF FORMS

Forms shall be removed preventing injury to the concrete and ensuring the complete safety of the structure. Formwork for columns, walls, side of beams and other parts not supporting the weight of concrete may be removed when the concrete has attained sufficient strength to resist damage from the removal operation but not before at least 24 hours has elapsed since concrete placement. Supporting forms and shores shall not be removed from beams, floors and walls until the structural units are strong enough to carry their own weight and any other construction or natural loads. Supporting forms or shores shall not be removed before the concrete strength has reached 70 percent of design strength, as determined by field cured cylinders or other approved methods. This strength shall be demonstrated by job-cured test specimens, and by a structural analysis considering the proposed loads in relation to these test strengths and the strength of forming and shoring system. The job-cured test specimens for form removal purposes shall be provided in numbers as directed and shall be in addition to those required for concrete quality control. The specimens shall be removed from molds at the age of 24 hours and shall receive, insofar as possible, the same curing and protection as the structures they represent.

TABLE 1

TOLERANCES FOR FORMED SURFACES

1.	Variations from the plumb:	In any 3 m of length -------- 6 mm
	a. In the lines and surfaces of columns, piers, walls and in arises	Maximum for entire length -- 25 mm
	b. For exposed corner columns, control-joint grooves, and other conspicuous lines	In any 6 m of length -------- 6 mm Maximum for entire length 13 mm
2.	Variation from the level or from the grades indicated on the drawings:	In any 3 m of length ------- 6 mm In any bay or in any 6 m of length ---------- 10 mm
	a. In slab soffits, ceilings beam soffits, and in arises, measured before removal of supporting shores	Maximum for entire length - 20 mm
	b. In exposed lintels, sills, parapets, horizontal grooves, and other conspicuous lines	In any bay or in any 6 m of length ---------- 6 mm Maximum for entire length - 13 mm
3.	Variation of the linear building lines from established position in plan	In any 6 m ---------- 13 mm Maximum ---------- 25 mm

4. Variation of distance between walls, columns, partitions	6 mm per 3 m of distance, but not more than 13 mm in any one bay, and not more than 25 mm total variation
5. Variation in the sizes and locations of sleeves, floor openings, and wall opening	Minus ---------- 6 mm Plus ---------- 13 mm
6. Variation in cross-sectional dimensions of columns and beams and in the thickness of slabs and walls	Minus ---------- 6 mm Plus ---------- 13 mm
7. Footings:	
a. Variation of dimensions in plan	Minus ---------- 13 mm Plus ---------- 50 mm when formed or plus 75 mm when placed against unformed excavation
b. Misplacement of eccentricity	2 percent of the footing width in the direction of misplacement but not more than --------- 50 mm
c. Reduction in thickness	Minus ---------- 5 percent of specified thickness
8. Variation in steps:	Riser ---------- 3 mm
a. In a flight of stairs	Tread ---------- 6 mm
b. In consecutive steps	Riser ---------- 2 mm Tread ---------- 3 mm

END OF SECTION

SECTION 03150

EXPANSION JOINTS, CONTRACTION JOINTS, AND WATERSTOPS

PART 1 GENERAL

1.1 REFERENCES

The publications listed below form a part of this specification to the extent referenced. The publications are referred to in the text by basic designation only.

AMERICAN ASSOCIATION OF STATE HIGHWAY AND TRANSPORTATION OFFICIALS (AASHTO)

AASHTO T 111	(1983) Inorganic Matter or Ash in Bituminous Materials

AMERICAN HARDBOARD ASSOCIATION (AHA)

AHA ANSI/AHA A135.4	(1995) Basic Hardboard

AMERICAN SOCIETY FOR TESTING AND MATERIALS (ASTM)

ASTM A 109	(1993) Steel, Strip, Carbon, Cold-Rolled
ASTM A 109M	(1991) Steel, Strip, Carbon, Cold-Rolled (Metric)
ASTM A 167	(1996) Stainless and Heat-Resisting Chromium-Nickel Steel Plate, Sheet, and Strip
ASTM A 480/A 480M	(1996a) General Requirements for Flat-Rolled Stainless and Heat-Resisting Steel Plate, Sheet, and Strip
ASTM A 570/A 570M	(1996) Steel, Sheet and Strip, Carbon, Hot-Rolled, Structural Quality
ASTM B 152	(1994) Copper Sheet, Strip, Plate, and Rolled Bar
ASTM B 152M	(1995) Copper Sheet, Strip, Plate, and Rolled Bar (Metric)
ASTM B 370	(1992) Copper Sheet and Strip for Building Construction
ASTM C 919	(1984; R 1992) Use of Sealants in Acoustical Applications
ASTM C 920	(1995) Elastomeric Joint Sealants

ASTM D 4	(1986; R 1993) Bitumen Content
ASTM D 6	(1995) Loss on Heating of Oil and Asphaltic Compounds
ASTM D 412	(1997) Vulcanized Rubber and Thermoplastic Rubbers and Thermoplastic Elastomers - Tension
ASTM D 471	(1996) Rubber Property - Effect of Liquids
ASTM D 1190	(1996) Concrete Joint Sealer, Hot-Applied Elastic Type
ASTM D 1191	(1984; R 1994) Test Methods for Concrete Joint Sealers
ASTM D 1751	(1983; R 1991) Preformed Expansion Joint Filler for Concrete Paving and Structural Construction (Nonextruding and Resilient Bituminous Types)
ASTM D 1752	(1984; R 1996) Preformed Sponge Rubber and Cork Expansion Joint Fillers for Concrete Paving and Structural Construction
ASTM D 1854	(1996) Specification for Jet-Fuel-Resistant Concrete Joint Sealer, Hot-Poured Elastic Type
ASTM D 1855	(1989) Test Method for Jet-Fuel Resistant Concrete Joint Sealer, Hot-Applied Elastic Type
ASTM D 2628	(1991) Preformed Polychloroprene Elastomeric Joint Seals for Concrete Pavements
ASTM D 2835	(1989; R 1993) Lubricant for Installation of Preformed Compression Seals in Concrete Pavements
ASTM D 5249	(1995) Backer Material for Use With Cold and Hot-Applied Joint Sealants in Portland-Cement Concrete and Asphalt Joints

CORPS OF ENGINEERS (COE)

COE CRD-C 513	(1974) Corps of Engineers Specifications for Rubber Waterstops
COE CRD-C 572	(1974) Corps of Engineers Specifications for Polyvinylchloride Waterstop

1.2 SUBMITTALS

Government approval is required for submittals with a "GA" designation; submittals having an "FIO" designation are for information only. The following shall be submitted in accordance with SECTION 01330: SUBMITTAL PROCEDURES:

SD-01 Data

Preformed Expansion Joint Filler; GA. Sealant; GA. Waterstops; GA.

Manufacturer's literature, including safety data sheets, for preformed fillers and the lubricants used in their installation; field-molded sealants and primers (when required by sealant manufacturer); preformed compression seals; and waterstops.

SD-04 Drawings

Waterstops; FIO.

Shop drawings and fabrication drawings provided by the manufacturer or prepared by the Contractor.

SD-06 Instructions

Preformed Expansion Joint Filler; FIO. Sealant; FIO. Waterstops; FIO.

Manufacturer's recommended instructions for installing preformed fillers, field-molded sealants; preformed compression seals; and waterstops; and for splicing non-metallic waterstops.

SD-13 Certificates

Preformed Expansion Joint Filler; GA. Sealant; GA. Waterstops; GA.

Certificates of compliance stating that the joint filler and sealant materials and waterstops conform to the requirements specified.

SD-14 Samples

Preformed Compression Seals and Lubricants; FIO.

Specimens identified to indicate the manufacturer, type of material, size and quantity of material, and shipment or lot represented. Each sample shall be a piece not less than 3 m of 25 mm nominal width or wider seal or a piece not less than 4 m of compression seal less than 25 mm nominal width. One liter of lubricant shall be provided.

Field-Molded Type; FIO.

Four liters of field-molded sealant and one liter of primer (when primer is recommended by the sealant manufacturer) identified to indicate manufacturer, type of material, quantity, and shipment or lot represented.

Non-metallic Materials; FIO.

Specimens identified to indicate manufacturer, type of material, size, quantity of material, and shipment or lot represented. Each sample shall be a piece not less than 300 mm long cut from each 61 m of finished waterstop furnished, but not less than a total of 1 m of each type, size, and lot furnished. One splice sample of each size and type for every 50 splices made in the factory and every 10 splices made at the job site. The splice samples shall be made using straight run pieces with the splice located at the mid-length of the sample and finished as required for the installed waterstop. The total length of each splice shall be not less than 300 mm long.

1.3 DELIVERY AND STORAGE

Material delivered and placed in storage shall be stored off the ground and protected from moisture, dirt, and other contaminants. Sealants shall be delivered in the manufacturer's original unopened containers. Sealants whose shelf life has expired shall be removed from the site.

PART 2 PRODUCTS

2.1 CONTRACTION JOINT STRIPS

Contraction joint strips shall be 3 mm thick tempered hardboard conforming to AHA ANSI/AHA A135.4, Class 1. In lieu of hardboard strips, rigid polyvinylchloride (PVC) or high impact polystyrene (HIPS) insert strips specifically designed to induce controlled cracking in slabs on grade may be used. Such insert strips shall have removable top section.

2.2 PREFORMED EXPANSION JOINT FILLER

Expansion joint filler shall be preformed material conforming to ASTM D 1751or ASTM D 1752. Unless otherwise indicated, filler material shall be 10 mm thick and of a width applicable for the joint formed. Backer material, when required, shall conform to ASTM D 5249.

2.3 SEALANT

Joint sealant shall conform to the following:

2.3.1 Preformed Polychloroprene Elastomeric Type

ASTM D 2628.

2.3.2 Lubricant for Preformed Compression Seals

ASTM D 2835.

2.3.3 Hot-Poured Type

ASTM D 1190 tested in accordance with ASTM D 1191.

2.3.4 Field Molded Type

ASTM C 920, Type M for horizontal joints or Type NS for vertical joints, Class 25, and Use NT. Bond breaker material shall be polyethylene tape, coated paper, metal foil or similar type materials. The back-up material shall be compressible, non-shrink, nonreactive with sealant, and non-absorptive material type such as extruded butyl or polychloroprene rubber.

2.4 WATERSTOPS

Intersection and change of direction waterstops shall be shop fabricated.

2.4.1 Flexible Metal

Copper waterstops shall conform to ASTM B 152M and ASTM B 370, O60 soft anneal temper and 0.686 mm (20 oz mass per sq ft) sheet thickness. Stainless steel waterstops shall conform to ASTM A 167 and ASTM A 480/A 480M, UNS S30453 (Type 304L), and 0.9525 mm (20 gauge) thick strip.

2.4.2 Rigid Metal

Flat steel waterstops shall conform to ASTM A 109M , No. 2 (half hard) temper, No. 2 edge, No. 1 (matte or dull) finish or ASTM A 570/A 570M, Grade 40.

2.4.3 Non-Metallic Materials`

Non-metallic waterstops shall be manufactured from a prime virgin resin; reclaimed material is not acceptable. The compound shall contain plasticizers, stabilizers, and other additives to meet specified requirements. Rubber waterstops shall conform to COE CRD-C 513. Polyvinylchloride waterstops shall conform to COE CRD-C 572. Thermoplastic elastomeric rubber waterstops shall conform to ASTM D 471.

2.4.4 Non-Metallic Hydrophilic

Swellable strip type compound of polymer modified chloroprene rubber that swells upon contact with water shall conform to ASTM D 412 as follows: Tensile strength 2.9 MPa minimum; ultimate elongation 600 percent minimum. Hardness shall be 50 minimum on the type A durometer and the volumetric expansion ratio in distilled water at 20 degrees C shall be 3 to 1 minimum.

2.4.5 Preformed Elastic Adhesive

Preformed plastic adhesive waterstops shall be produced from blends of refined hydrocarbon resins and plasticizing compounds reinforced with inert mineral filler, and shall contain no solvents, asbestos, irritating fumes or obnoxious odors. The compound shall not depend on oxidizing, evaporating, or chemical action for its adhesive or cohesive strength.

2.4.5.1 Chemical Composition

The chemical composition of the sealing compound shall meet the requirements shown below:

PERCENT BY WEIGHT

COMPONENT	MIN.	MAX.	TEST
Bitumen (Hydrocarbon plastic)	50	70	ASTM D 4
Inert Mineral Filler	30	50	AASHTO T 111
Volatile Matter		2	ASTM D 6

2.4.5.2 Adhesion Under Hydrostatic Pressure

The sealing compound shall not leak at the joints for a period of 24 hours under a vertical 2 m head pressure. In a separate test, the sealing compound shall not leak under a horizontal pressure of 65 kPa which is reached by slowly applying increments of 13 kPa every minute.

2.4.5.3 Sag of Flow Resistance

Sagging shall not be detected when tested as follows: Fill a wooden form 25 mm wide and 150 mm long flush with sealing compound and place in an oven at 58 degrees C in a vertical position for 5 days.

2.4.5.4 Chemical Resistance

The sealing compound when immersed separately in a 5 percent solution of caustic potash, a 5 percent solution of hydrochloric acid, 5 percent solution of sulfuric acid and a saturated hydrogen sulfide solution for 30 days at ambient room temperature shall show no visible deterioration.

PART 3 EXECUTION

3.1 JOINTS

Joints shall be installed at locations indicated and as authorized.

3.1.1 Contraction Joints

Contraction joints may be constructed by inserting tempered hardboard strips or rigid PVC or HIPS insert strips into the plastic concrete using a steel parting bar, when necessary, or by cutting the concrete with a saw after concrete has set. Joints shall be approximately 3 mm wide and shall extend into the slab one-fourth the slab thickness, minimum, but not less than 25 mm .

3.1.1.1 Joint Strips

Strips shall be of the required dimensions and as long as practicable. After the first floating, the concrete shall be grooved with a tool at the joint locations. The strips shall be inserted in the groove and depressed until the top edge of the vertical surface is flush with the surface of the slab. The slab shall be floated and finished as specified. Working of the concrete adjacent to the joint shall be the minimum necessary to fill voids and consolidate the concrete. Where indicated, the top portion of the strip shall be sawed out after the curing period to form a recess for sealer. The removable section of PVC or HIPS strips shall be discarded and the insert left in place. True alignment of the strips shall be maintained during insertion.

3.1.1.2 Sawed Joints

Joint sawing shall be early enough to prevent uncontrolled cracking in the slab, but late enough that this can be accomplished without appreciable spalling. Concrete sawing machines shall be adequate in number and power, and with sufficient replacement blades to complete the sawing at the required rate. Joints shall be cut to true alignment and shall be cut in sequence of concrete placement. Sludge and cutting debris shall be removed.

3.1.2 Expansion Joints

Preformed expansion joint filler shall be used in expansion and isolation joints in slabs around columns and between slabs on grade and vertical surfaces where indicated. The filler shall extend the full slab depth, unless otherwise indicated. The edges of the joint shall be neatly finished with an edging tool of 3 mm radius, except where a resilient floor surface will be applied. Where the joint is to receive a sealant, the filler strips shall be installed at the proper level below the finished floor with a slightly tapered, dressed and oiled wood strip temporarily secured to the top to form a recess to the size shown on the drawings. The wood strip shall be removed after the concrete has set. Contractor may opt to use a removable expansion filler cap designed and fabricated for this purpose in lieu of the wood strip. The groove shall be thoroughly cleaned of laitance, curing compound, foreign materials, protrusions of hardened concrete, and any dust which shall be blown out of the groove with oil-free compressed air.

3.1.3 Joint Sealant

Sawed contraction joints and expansion joints in slabs shall be filled with joint sealant, unless otherwise shown. Joint surfaces shall be clean, dry, and free of oil or other foreign material which would adversely affect the bond between sealant and concrete. Joint sealant shall be applied as recommended by the manufacturer of the sealant.

3.1.3.1 Joints With Preformed Compression Seals

Compression seals shall be installed with equipment capable of installing joint seals to the prescribed depth without cutting, nicking, twisting, or otherwise distorting or damaging the seal or concrete and with no more than 5 percent stretching of the seal. The sides of the joint and, if necessary, the sides of the compression seal shall be covered with a coating of lubricant. Butt joints shall be coated with liberal applications of lubricant.

3.1.3.2 Joints With Field-Molded Sealant

Joints shall not be sealed when the sealant material, ambient air, or concrete temperature is less than 4 degrees C . When the sealants are meant to reduce the sound transmission characteristics of interior walls, ceilings, and floors the guidance provided in ASTM C 919 shall be followed. Joints requiring a bond breaker shall be coated with curing compound or with bituminous paint. Bond breaker and back-up material shall be installed where required. Joints shall be primed and filled flush with joint sealant in accordance with the manufacturer's recommendations.

3.2 WATERSTOPS, INSTALLATION AND SPLICES

Waterstops shall be installed at the locations shown to form a continuous water-tight diaphragm. Adequate provision shall be made to support and completely protect the waterstops during the progress

of the work. Any waterstop punctured or damaged shall be repaired or replaced. Exposed waterstops shall be protected during application of form release agents to avoid being coated. Suitable guards shall be provided to protect exposed projecting edges and ends of partially embedded waterstops from damage when concrete placement has been discontinued. Splices shall be made by certified trained personnel using approved equipment and procedures.

3.2.1 Copper And Stainless Steel

Splices in copper waterstops shall be lap joints made by brazing. Splices in stainless steel waterstops shall be welded using a TIG or MIG process utilizing a weld rod to match the stainless. All welds shall not be annealed to maintain physical properties. Carbon flame shall not be used in the annealing process. Damaged waterstops shall be repaired by removing damaged portions and patching. Patches shall overlap a minimum of 25 mm onto undamaged portion of the waterstop.

3.2.2 Flat Steel

Splices in flat steel waterstops shall be properly aligned, butt welded, and cleaned of excessive material.

3.2.3 Non-Metallic

Fittings shall be shop made using a machine specifically designed to mechanically weld the waterstop. A miter guide, proper fixturing (profile dependant), and portable power saw shall be used to miter cut the ends to be joined to ensure good alignment and contact between joined surfaces. The splicing of straight lengths shall be done by squaring the ends to be joined. Continuity of the characteristic features of the cross section of the waterstop (ribs, tabular center axis, protrusions, etc.) shall be maintained across the splice.

3.2.3.1 Rubber Waterstop

Splices shall be vulcanized or shall be made using cold bond adhesive as recommended by the manufacturer. Splices for TPE-R shall be as specified for PVC.

3.2.3.2 Polyvinyl Chloride Waterstop

Splices shall be made by heat sealing the adjacent waterstop edges together using a thermoplastic splicing iron utilizing a non-stick surface specifically designed for waterstop welding. The correct temperature shall be used to sufficiently melt without charring the plastic. The spliced area, when cooled, shall show no signs of separation, holes, or other imperfections when bent by hand in as sharp an angle as possible.

3.2.3.3 Quality Assurance

Edge welding will not be permitted. Centerbulbs shall be compressed or closed when welding to non-centerbulb type. Waterstop splicing defects which are unacceptable include, but are not limited to the following: 1) Tensile strength less than 80 percent of parent section. 2) Free lap joints. 3) Misalignment of centerbulb, ribs, and end bulbs greater than 2 mm . 4) Misalignment which reduces waterstop cross section more than 15 percent. 5) Bond failure at joint deeper than 2 mm or 15 percent of material thickness. 6) Misalignment of waterstop splice resulting in misalignment of waterstop in excess of 13 mm in 3 m. 7) Visible porosity in the weld area, including pin holes. 8) Charred or burnt

material. 9) Bubbles or inadequate bonding. 10) Visible signs of splice separation when cooled splice is bent by hand at a sharp angle.

3.2.4 Non-Metallic Hydrophilic Waterstop Installation

Ends to be joined shall be miter cut with sharp knife or shears. The ends shall be adhered with cyanacryiate (super glue) adhesive. When joining hydrophilic type waterstop to PVC waterstop, the hydrophilic waterstop shall be positioned as shown on the drawings. A liberal amount of a single component hydrophilic sealant shall be applied to the junction to complete the transition.

3.2.5 Preformed Plastic Adhesive Installation

The installation of preformed plastic adhesive waterstops shall be a prime, peel, place and pour procedure. Joint surfaces shall be clean and dry before priming and just prior to placing the sealing strips. The end of each strip shall be spliced to the next strip with a 25 mm overlap; the overlap shall be pressed firmly to release trapped air. During damp or cold conditions the joint surface shall be flashed with a safe, direct flame to warm and dry the surface adequately; the sealing strips shall be dipped in warm water to soften the material to achieve maximum bond to the concrete surface.

3.3 CONSTRUCTION JOINTS

Construction joints are specified in SECTION 03300: CAST-IN-PLACE STRUCTURAL CONCRETE except that construction joints coinciding with expansion and contraction joints shall be treated as expansion or contraction joints as applicable.

END OF SECTION

This page intentionally blank

SECTION 03200

CONCRETE REINFORCEMENT

PART 1 GENERAL

1.1 REFERENCES

The publications listed below form a part of this specification to the extent referenced. The publications are referred to in the text by basic designation only.

ACI INTERNATIONAL (ACI)

ACI 318/318R	(1995) Building Code Requirements for Structural Concrete and Commentary
ACI 318M	(1995) Building Code Requirements for Structural Concrete and Commentary (Metric)

AMERICAN SOCIETY FOR TESTING AND MATERIALS (ASTM)

ASTM A 53	(1996) Pipe, Steel, Black and Hot-Dipped, Zinc-Coated, Welded and Seamless
ASTM A 82	(1995a) Steel Wire, Plain, for Concrete Reinforcement
ASTM A 184/A 184M	(1996) Fabricated Deformed Steel Bar Mats for Concrete Reinforcement
ASTM A 185	(1994) Steel Welded Wire Fabric, Plain, for Concrete Reinforcement
ASTM A 496	(1995a) Steel Wire, Deformed, for Concrete Reinforcement
ASTM A 497	(1995) Steel Welded Wire Fabric, Deformed, for Concrete Reinforcement
ASTM A 615/A 615M	(1996a) Deformed and Plain Billet-Steel Bars for Concrete Reinforcement
ASTM A 675/A 675M	(1990a; R 1995) Steel Bars, Carbon, Hot-Wrought, Special Quality, Mechanical Properties
ASTM A 706/A 706M	(1995b) Low-Alloy Steel Deformed and Plain Bars for Concrete Reinforcement

ASTM A 767/A 767M	(1995) Zinc-Coated (Galvanized) Steel Bars in Concrete Reinforcement
ASTM A 775/A 775M	(1996) Epoxy-Coated Reinforcement Steel Bars
ASTM A 884/A 884M	(1996a) Epoxy-Coated Steel Wire and Welded Wire Fabric for Reinforcement
ASTM C 1116	(1995) Fiber-Reinforced Concrete and Shotcrete

AMERICAN WELDING SOCIETY (AWS)

AWS D1.4	(1992) Structural Welding Code - Reinforcing Steel

CONCRETE REINFORCING STEEL INSTITUTE (CRSI)

CRSI MSP-1	(1996) Manual of Standard Practice

1.2 SUBMITTALS

Government approval is required for submittals with a "GA" designation; submittals having an "FIO" designation are for information only. The following shall be submitted in accordance with SECTION 01330: SUBMITTAL PROCEDURES:

SD-04 Drawings

Concrete Reinforcement System; GA.

Detail drawings showing reinforcing steel placement, schedules, sizes, grades, and splicing and bending details. Drawings shall show support details including types, sizes and spacing.

SD-08 Statements

Welding; FIO.

A list of qualified welders names.

SD-13 Certificates

Reinforcing Steel; GA.

Certified copies of mill reports attesting that the reinforcing steel furnished contains no less than 25 percent recycled scrap steel and meets the requirements specified herein, prior to the installation of reinforcing steel.

1.3 WELDING

Welders shall be qualified in accordance with AWS D1.4. Qualification test shall be performed at the worksite and the Contractor shall notify the Contracting Officer 24 hours prior to conducting tests.

Special welding procedures and welders qualified by others may be accepted as permitted by AWS D1.4.

1.4 DELIVERY AND STORAGE

Reinforcement and accessories shall be stored off the ground on platforms, skids, or other supports.

PART 2 PRODUCTS

2.1 DOWELS

Dowels shall conform to ASTM A 675/A 675M, Grade 80. Steel pipe conforming to ASTM A 53, Schedule 80, may be used as dowels provided the ends are closed with metal or plastic inserts or with mortar.

2.2 FABRICATED BAR MATS

Fabricated bar mats shall conform to ASTM A 184/A 184M.

2.3 REINFORCING STEEL

Reinforcing steel shall be deformed bars conforming to ASTM A 615/A 615M or ASTM A 706/A 706M, grades and sizes as indicated. Cold drawn wire used for spiral reinforcement shall conform to ASTM A 82.

2.4 WELDED WIRE FABRIC

Welded wire fabric shall conform to ASTM A 185 or ASTM A 497.

2.5 WIRE TIES

Wire ties shall be 16 gauge or heavier black annealed steel wire.

2.6 SUPPORTS

Bar supports for formed surfaces shall be designed and fabricated in accordance with CRSI MSP-1 and shall be steel or precast concrete blocks. Precast concrete blocks shall have wire ties and shall be not less than 100 by 100 mm when supporting reinforcement on ground. Precast concrete block shall have compressive strength equal to that of the surrounding concrete. Where concrete formed surfaces will be exposed to weather or where surfaces are to be painted, steel supports within 13 mm of concrete surface shall be galvanized, plastic protected or of stainless steel. Concrete supports used in concrete exposed to view shall have the same color and texture as the finish surface. For slabs on grade, supports shall be precast concrete blocks, plastic coated steel fabricated with bearing plates, or specifically designed wire-fabric supports fabricated of plastic.

PART 3 EXECUTION

3.1 REINFORCEMENT

Reinforcement shall be fabricated to shapes and dimensions shown and shall conform to the requirements of ACI 318M . Reinforcement shall be cold bent unless otherwise authorized. Bending may be accomplished in the field or at the mill. Bars shall not be bent after embedment in concrete. Safety caps shall be placed on all exposed ends of vertical concrete reinforcement bars that pose a danger to life safety. Wire tie ends shall face away from the forms.

3.1.1 Placement

Reinforcement shall be free from loose rust and scale, dirt, oil, or other deleterious coating that could reduce bond with the concrete. Reinforcement shall be placed in accordance with ACI 318M at locations shown plus or minus one bar diameter. Reinforcement shall not be continuous through expansion joints and shall be as indicated through construction or contraction joints. Concrete coverage shall be as indicated or as required by ACI 318M . If bars are moved more than one bar diameter to avoid interference with other reinforcement, conduits or embedded items, the resulting arrangement of bars, including additional bars required to meet structural requirements, shall be approved before concrete is placed.

3.1.2 Splicing

Splices of reinforcement shall conform to ACI 318M and shall be made only as required or indicated. Splicing shall be by lapping or by mechanical or welded butt connection; except that lap splices shall not be used for bars larger than No. 11 unless otherwise indicated. Welding shall conform to AWS D1.4. Welded butt splices shall be full penetration butt welds. Lapped bars shall be placed in contact and securely tied or spaced transversely apart to permit the embedment of the entire surface of each bar in concrete. Lapped bars shall not be spaced farther apart than one-fifth the required length of lap or 150 mm. Mechanical butt splices shall be in accordance with the recommendation of the manufacturer of the mechanical splicing device. Butt splices shall develop 125 percent of the specified minimum yield tensile strength of the spliced bars or of the smaller bar in transition splices. Bars shall be flame dried before butt splicing. Adequate jigs and clamps or other devices shall be provided to support, align, and hold the longitudinal centerline of the bars to be butt spliced in a straight line.

3.2 WELDED-WIRE FABRIC PLACEMENT

Welded-wire fabric shall be placed in slabs as indicated. Fabric placed in slabs on grade shall be continuous between expansion, construction, and contraction joints. Fabric placement at joints shall be as indicated.
Lap splices shall be made in such a way that the overlapped area equals the distance between the outermost crosswires plus 50 mm. Laps shall be staggered to avoid continuous laps in either direction. Fabric shall be wired or clipped together at laps at intervals not to exceed 1.2 m. Fabric shall be positioned by the use of supports.

3.3 DOWEL INSTALLATION

Dowels shall be installed in slabs on grade at locations indicated and at right angles to joint being doweled. Dowels shall be accurately positioned and aligned parallel to the finished concrete surface

before concrete placement. Dowels shall be rigidly supported during concrete placement. One end of dowels shall be coated with a bond breaker.

END OF SECTION

This page intentionally blank

SECTION 03300

CONCRETE FOR BUILDING CONSTRUCTION

PART 1 GENERAL

1.1 REFERENCES

The publications listed below form a part of this specification to the extent referenced. The publications are referred to in the text by basic designation only.

AMERICAN ASSOCIATION OF STATE HIGHWAY AND TRANSPORTATION OFFICIALS (AASHTO)

AASHTO M 182	(1991I) Burlap Cloth Made From Jute or Kenaf

ACI INTERNATIONAL (ACI)

ACI 117/A117R	(1990; Errata) Standard Tolerances for Concrete Construction and Materials
ACI 211.1	(1991) Standard Practice for Selecting Proportions for Normal, Heavyweight, and Mass Concrete
ACI 211.2	(1991) Standard Practice for Selecting Proportions for Structural Lightweight Concrete
ACI 213R	(1987) Guide for Structural Lightweight Aggregate Concrete
ACI 214.3R	(1988) Simplified Version of the Recommended Practice for Evaluation of Strength Test Results of Concrete
ACI 301	(1996) Specifications for Structural Concrete for Buildings
ACI 303R	(1991) Guide to Cast-In-Place Architectural Concrete Practice
ACI 305R	(1991) Hot Weather Concreting
ACI 318/318R	(1995) Building Code Requirements for Reinforced Concrete and Commentaries

AMERICAN SOCIETY FOR TESTING AND MATERIALS (ASTM)

ASTM C 31	(1991) Making and Curing Concrete Test Specimens in the Field
ASTM C 33	(1993) Concrete Aggregates
ASTM C 39	(1994) Compressive Strength of Cylindrical Concrete Specimens

ASTM C 42	(1994) Obtaining and Testing Drilled Cores and Sawed Beams of Concrete
ASTM C 78	(1994) Flexural Strength of Concrete (Using Simple Beam With Third-Point Loading)
ASTM C 94	(1996) Ready-Mixed Concrete
ASTM C 131	(1989) Resistance to Degradation of Small-Size Coarse Aggregate by Abrasion and Impact in the Los Angeles Machine
ASTM C 136	(1995a) Sieve Analysis of Fine and Coarse Aggregates
ASTM C 143	(1990a) Slump of Hydraulic Cement Concrete
ASTM C 150	(1995) Portland Cement
ASTM C 171	(1995) Sheet Materials for Curing Concrete
ASTM C 172	(1990) Sampling Freshly Mixed Concrete
ASTM C 173	(1994a) Air Content of Freshly Mixed Concrete by the Volumetric Method
ASTM C 192	(1990a) Making and Curing Concrete Test Specimens in the Laboratory
ASTM C 231	(1991b) Air Content of Freshly Mixed Concrete by the Pressure Method
ASTM C 260	(1995) Air-Entraining Admixtures for Concrete
ASTM C 309	(1995) Liquid Membrane-Forming Compounds for Curing Concrete
ASTM C 330	(1989) Lightweight Aggregates for Structural Concrete
ASTM C 494	(1992) Chemical Admixtures for Concrete
ASTM C 496	(1990) Splitting Tensile Strength of Cylindrical Concrete Specimens
ASTM C 552	(1991) Cellular Glass Thermal Insulation
ASTM C 567	(1991) Unit Weight of Structural Lightweight Concrete
ASTM C 578	(1995) Rigid, Cellular Polystyrene Thermal Insulation
ASTM C 591	(1994) Unfaced Preformed Rigid Cellular Polyurethane Thermal Insulation
ASTM C 595	(1995a) Blended Hydraulic Cements

ASTM C 618	(1996a) Coal Fly Ash and Raw or Calcined Natural Pozzolan for Use as a Mineral Admixture in Portland Cement Concrete
ASTM C 685	(1995) Concrete Made by Volumetric Batching and Continuous Mixing
ASTM C 881	(1990) Epoxy-Resin-Base Bonding Systems for Concrete
ASTM C 937	(1980, R 1991) Grout Fluidifier for Preplaced-Aggregate Concrete
ASTM C 940	(1989) Expansion and Bleeding of Freshly Mixed Grouts for Preplaced-Aggregate Concrete in the Laboratory
ASTM C 989	(1994a) Ground Granulated Blast-Furnace Slag for Use in Concrete and Mortars
ASTM C 1017	(1992) Chemical Admixtures for Use in Producing Flowing Concrete
ASTM C 1059	(1991) Latex Agents for Bonding Fresh to Hardened Concrete
ASTM C 1064	(1986, R 1993) Temperature of Freshly Mixed Portland Cement Concrete
ASTM C 1077	(1995b) Standard Practice for Laboratories Testing Concrete and Concrete Aggregates for Use in Construction and Criteria for Laboratory Evaluation
ASTM C 1107	(1991a) Packaged Dry, Hydraulic-Cement Grout (Nonshrink)
ASTM C 1116	(1991) Fiber-Reinforced Concrete and Shotcrete
ASTM C 1240	(1995) Silica Fume for Use in Hydraulic Cement Concrete and Mortar
ASTM D 75	(1987; R 1992) Sampling Aggregates
ASTM D 1751	(1983; R 1991) Preformed Expansion Joint Filler for Concrete Paving and Structural Construction (Nonextruding and Resilient Bituminous Types)
ASTM D 1752	(1984; R 1992) Preformed Sponge Rubber and Cork Expansion Joint Fillers for Concrete Paving and Structural Construction
ASTM E 96	(1995) Water Vapor Transmission of Materials
ASTM E 1155	(1996) Determining Floor Flatness and Levelness Using the F-Number System

CORPS OF ENGINEERS (COE)

COE CRD-C 94	(1995) Surface Retarders

COE CRD-C 104	(1980) Method of Calculation of the Fineness Modulus of Aggregate
COE CRD-C 400	(1963) Requirements for Water for Use in Mixing or Curing Concrete
COE CRD-C 521	(1981) Standard Test Method for Frequency and Amplitude of Vibrators for Concrete
COE CRD-C 540	(1971; R 1981) Standard Specification for Nonbituminous Inserts for Contraction Joints in Portland Cement Concrete Airfield Pavements, Sawable Type
COE CRD-C 572	(1974) Corps of Engineers Specifications for Polyvinylchloride Waterstop

NATIONAL INSTITUTE OF STANDARDS AND TECHNOLOGY (NIST)

NIST HB 44	(1995) NIST Handbook 44: Specifications, Tolerances, and Other Technical Requirements for Weighing and Measuring Devices

NATIONAL READY-MIXED CONCRETE ASSOCIATION (NRMCA)

NRMCA TMMB-01	(1992) Truck Mixer Agitator and Front Discharge Concrete Carrier Standards of the Truck Mixer Manufacturers Bureau
NRMCA CPMB 100	(1990) Concrete Plant Standards
NRMCA QC 3	(1984) Quality Control Manual: Section 3, Plant Certifications Checklist: Certification of Ready Mixed Concrete Production Facilities

1.2 SUBMITTALS

Government approval is required for submittals with a "GA" designation; submittals having an "FIO" designation are for information only. The following shall be submitted in accordance with Section 01300 SUBMITTALS:

Statements

Mixture Proportions; GA.

The results of trial mixture design studies along with a statement giving the maximum nominal coarse aggregate size and the proportions of ingredients that will be used in the manufacture of each strength or class of concrete, at least 14 days prior to commencing concrete placing operations. Aggregate weights shall be based on the saturated surface dry condition. The statement shall be accompanied by test results from an approved independent commercial testing laboratory, showing that mixture design studies have been made with materials proposed for the project and that the proportions selected will produce concrete of the qualities indicated. No substitutions shall be made in the materials used in the mixture design studies without additional tests to show that the quality of the concrete is satisfactory.

Reports

Testing and Inspection for Contractor Quality Control; GA.

Certified copies of laboratory test reports, including mill tests and all other test data, for portland cement, blended cement, pozzolan, ground granulated blast furnace slag, silica fume, aggregate, admixtures, and curing compound proposed for use on this project.

Certificates

Qualifications; GA.

Written documentation for Contractor Quality Control personnel.

1.3 QUALIFICATIONS

Contractor Quality Control personnel assigned to concrete construction shall be American Concrete Institute (ACI) Certified Workmen in one of the following grades or shall have written evidence of having completed similar qualification programs:

Concrete Field Testing Technician, Grade I
Concrete Laboratory Testing Technician, Grade I or II
Concrete Construction Inspector, Level II

The foreman or lead journeyman of the flatwork finishing crew shall have similar qualification for ACI Concrete Flatwork Technician/Finisher or equal, with written documentation.

1.4 GENERAL REQUIREMENTS

1.4.1 Tolerances

Except as otherwise specified herein, tolerances for concrete batching, mixture properties, and construction as well as definition of terms and application practices shall be in accordance with ACI 117/A117R. Level and grade tolerance measurements of slabs shall be made as soon as possible after finishing; when forms or shoring are used, the measurements shall be made prior to removal.

1.4.1.1 Floors

For the purpose of this Section the following terminology correlation between ACI 117/A117R and this Section shall apply:

Floor Profile Quality Classification From ACI 117/A117R	This Section
Conventional Straightedged	Same
Flat	Float Finish or Trowel Finish

Levelness tolerance shall not apply where design requires floors to be sloped to drains or sloped for other reasons.

1.4.1.2 Floors by the Straightedge System

The flatness of the floors shall be carefully controlled and the tolerances shall be measured by the straightedge system as specified in paragraph 4.5.7 of ACI 117/A117R, using a 3 m straightedge, within 72 hours after floor slab installation and before shores and/or forms are removed. The listed tolerances shall be met at any and every location at which the straightedge can be placed.

Straightedged	8 mm
Float Finish	5 mm
Trowel Finish	5 mm

1.4.2 Strength Requirements and w/c Ratio

1.4.2.1 Strength Requirements

Specified compressive strength (f'c) shall be as follows:

COMPRESSIVE STRENGTH	STRUCTURE OR PORTION OF STRUCTURE
27.5 MPa at 28 days	All concrete for building construction

Concrete slabs on-grade shall have a 28-day flexural strength of 4.5 MPa. Concrete made with high-early strength cement shall have a 7-day strength equal to the specified 28-day strength for concrete made with Type I or II portland cement. Compressive strength shall be determined in accordance with ASTM C 39. Flexural strength shall be determined in accordance with ASTM C 78.

a. Evaluation of Concrete Compressive Strength. Compressive strength specimens (152 by 305 mm cylinders) shall be fabricated by the Contractor and laboratory cured in accordance with ASTM C 31 and tested in accordance with ASTM C 39. The strength of the concrete will be considered satisfactory so long as the average of all sets of three consecutive test results equals or exceeds the specified compressive strength f'c and no individual test result falls below the specified strength f'c by more than 3.5 MPa. A "test" is defined as the average of two companion cylinders, or if only one cylinder is tested, the results of the single cylinder test. Additional analysis or testing, including taking cores and/or load tests may be required at the Contractor's expense when the strength of the concrete in the structure is considered potentially deficient.

b. Investigation of Low-Strength Compressive Test Results. When any strength test of standard-cured test cylinders falls below the specified strength requirement by more than 3.5 MPa or if tests of field-cured cylinders indicate deficiencies in protection and curing, steps shall be taken to assure that the load-carrying capacity of the structure is not jeopardized. When the strength of concrete in place is considered potentially deficient, cores shall be obtained and tested in accordance with ASTM C 42. At least three representative cores shall be taken from each member or area of concrete in place that is considered potentially deficient. The location of cores will be determined by the Contracting Officer to least impair the strength of the structure. Concrete in the area represented by the core testing will be considered adequate if the average strength of the cores is equal to at least 85 percent of the specified strength requirement and if no single core is less than 75 percent of the specified strength requirement. Non-destructive tests (tests other than test cylinders or cores) shall not be used as a basis for acceptance or rejection. The Contractor shall perform the coring and repair the holes. Cores will be tested by the Government.

c. Load Tests. If the core tests are inconclusive or impractical to obtain or if structural analysis does not confirm the safety of the structure, load tests may be directed by the Contracting Officer in accordance with the requirements of ACI 318/318R. Concrete work evaluated by structural analysis or by results of a load test as being understrength shall be corrected in a manner satisfactory to the Contracting Officer. All investigations, testing, load tests, and correction of deficiencies shall be performed by and at the expense of the Contractor and must be approved by the Contracting Officer, except that if all concrete is found to be in compliance with the drawings and specifications, the cost of investigations, testing, and load tests will be at the expense of the Government.

d. Evaluation of Concrete Flexural Strength. Flexural strength specimens (beams) shall be fabricated by the Contractor and laboratory cured in accordance with ASTM C 31 and tested in accordance with ASTM C 78. The strength of the concrete will be considered satisfactory so long as the average of all sets of three consecutive test results equals or exceeds the specified flexural strength and no individual test result falls below the specified flexural strength by more than 350 kPa. A "test" is defined as the average of two companion beams. Additional analysis or testing, including taking cores and/or load tests may be required at the Contractor's expense when the strength of the concrete in the slab is considered potentially deficient.

1.4.2.2 Water-Cement Ratio

Maximum water-cement ratio (w/c) for normal weight concrete shall be as follows:

WATER-CEMENT RATIO, BY WEIGHT	STRUCTURE OR PORTION OF STRUCTURE
0.45	All concrete for building construction

These w/c's may cause higher strengths than that required above for compressive or flexural strength. The maximum w/c required will be the equivalent w/c as determined by conversion from the weight ratio of water to cement plus pozzolan, by the weight equivalency method as described in ACI 211.1.

1.4.3 Air Entrainment

All normal weight concrete shall be air entrained to contain between 4 and 7 percent total air, except that when the nominal maximum size coarse aggregate is 19 mm or smaller it shall be between 4.5 and 7.5 percent. Specified air content shall be attained at point of placement into the forms. Air content for normal weight concrete shall be determined in accordance with ASTM C 231.

1.4.4 Slump

Slump of the concrete, as delivered to the point of placement into the forms, shall be within the following limits. Slump shall be determined in accordance with ASTM C 143.

Structural Element	Slump, Minimum	Slump, Maximum
Walls, columns and beams	50 mm	100 mm
Foundation walls, substructure walls, footings, slabs	25 mm	75 mm
Any structural concrete approved for placement by pumping:		
At pump	50 mm	150 mm
At discharge of line	25 mm	100 mm

When use of a plasticizing admixture conforming to ASTM C 1017 or when a Type F or G high range water reducing admixture conforming to ASTM C 494 is permitted to increase the slump of concrete, concrete shall have a slump of 50 to 100 mm before the admixture is added and a maximum slump of 200 mm at the point of delivery after the admixture is added.

1.4.5 Concrete Temperature

The temperature of the concrete as delivered shall not exceed 32 degrees C. When the ambient temperature during placing is 5 degrees C or less, or is expected to be at any time within 6 hours after placing, the temperature of the concrete as delivered shall be between 12 and 25 degrees C.

1.4.6 Size of Coarse Aggregate

The largest feasible nominal maximum size aggregate (NMSA) specified in paragraph AGGREGATES shall be used in each placement. However, nominal maximum size of aggregate shall not exceed any of the following: three-fourths of the minimum cover for reinforcing bars, three-fourths of the minimum clear spacing between reinforcing bars, one-fifth of the narrowest dimension between sides of forms, or one-third of the thickness of slabs or toppings.

1.4.7 Special Properties and Products

Concrete may contain admixtures other than air entraining agents, such as water reducers, superplasticizers, or set retarding agents to provide special properties to the concrete, if specified or approved. Any of these materials to be used on the project shall be used in the mix design studies.

1.4.8 Level and Grade

Variation in alignment, grade, and dimensions of the structure from the established alignment, grade, and dimensions shown on the drawings shall be within the tolerances specified as follows:

TOLERANCES FOR BRIDGES, PIERS, AND OTHER STRUCTURES

Departure from established alignment		25 mm
Departure from established grades		25 mm
Variation from the plumb or the specified batter in the lines and surfaces of columns and piers	Exposed, in 3 meters	12.5 mm
	Backfilled, in 3 meters	25 mm
Variation from the level or from the grades indicated on the drawings in decks, beams, and railing offsets	Exposed, in 3 meters	12.5 mm
	Backfilled, in 3 meters	25 mm
Variation in the cross-sectional dimensions of columns, piers, decks, beams, and similar parts	Minus	6.25 mm
	Plus	12.5 mm
Variation in thickness of bridge decks and slabs		12.5 mm
Footings	Minus	12.5 mm
	Plus	12.5 mm

1.5 MIXTURE PROPORTIONS

Concrete shall be composed of portland cement, other cementitious and pozzolanic materials as specified, aggregates, water and admixtures as specified.

1.5.1 Proportioning Studies for Normal Weight Concrete

Trial design batches, mixture proportioning studies, and testing requirements for various classes and types of concrete specified shall be the responsibility of the Contractor. Except as specified for flexural strength concrete, mixture proportions shall be based on compressive strength as determined by test specimens fabricated in accordance with ASTM C 192 and tested in accordance with ASTM C 39. Samples of all materials used in mixture proportioning studies shall be representative of those proposed for use in the project and shall be accompanied by the manufacturer's or producer's test reports indicating compliance with these specifications. Trial mixtures having proportions, consistencies, and air content suitable for the work shall be made based on methodology described in ACI 211.1, using at least three different water-cement ratios for each type of mixture, which will produce a range of strength encompassing those required for each class and type of concrete required on the project. The maximum water-cement ratios required in the paragraph Maximum Allowable w/c Ratio will be the equivalent water-cement ratio as determined by conversion from the weight ratio of water to cement plus pozzolan, silica fume, and ground granulated blast furnace slag (GGBF slag) by the weight equivalency method as described in ACI 211.1. In the case where silica fume or GGBF slag is used, the weight of the silica fume and GGBF slag shall be included in the

equations in ACI 211.1 for the term P, which is used to denote the weight of pozzolan. If pozzolan is used in the concrete mixture, the minimum pozzolan content shall be 15 percent by weight of the total cementitious material, and the maximum shall be 35 percent. Laboratory trial mixtures shall be designed for maximum permitted slump and air content. Separate sets of trial mixture studies shall be made for each combination of cementitious materials and each combination of admixtures proposed for use. No combination of either shall be used until proven by such studies, except that, if approved in writing and otherwise permitted by these specifications, an accelerator or a retarder may be used without separate trial mixture study. Separate trial mixture studies shall also be made for concrete for any conveying or placing method proposed which requires special properties and for concrete to be placed in unusually difficult placing locations. The temperature of concrete in each trial batch shall be reported. For each water-cement ratio, at least three test cylinders for each test age shall be made and cured in accordance with ASTM C 192. They shall be tested at 7 and 28 days in accordance with ASTM C 39. From these test results, a curve shall be plotted showing the relationship between water-cement ratio and strength for each set of trial mix studies. In addition, a curve shall be plotted showing the relationship between 7 day and 28 day strengths. Each mixture shall be designed to promote easy and suitable concrete placement, consolidation and finishing, and to prevent segregation and excessive bleeding.

1.5.2 Proportioning Studies for Flexural Strength Concrete

Trial design batches, mixture proportioning studies, and testing requirements shall conform to the requirements specified in paragraph Proportioning Studies for Normal Weight Concrete, except that proportions shall be based on flexural strength as determined by test specimens (beams) fabricated in accordance with ASTM C 192 and tested in accordance with ASTM C 78. Procedures given in ACI 211.1 shall be modified as necessary to accommodate flexural strength.

1.5.3 Average Compressive Strength Required for Mixtures

The mixture proportions selected during mixture design studies shall produce a required average compressive strength (f'cr) exceeding the specified compressive strength (f'c) by the amount indicated below. This required average compressive strength, f'cr, will not be a required acceptance criteria during concrete production. However, whenever the daily average compressive strength at 28 days drops below f'cr during concrete production, or daily average 7-day strength drops below a strength correlated with the 28-day f'cr, the mixture shall be adjusted, as approved, to bring the daily average back up to f'cr. During production, the required f'cr shall be adjusted, as appropriate, based on the standard deviation being attained on the job.

1.5.3.1 Computations from Test Records

Where a concrete production facility has test records, a standard deviation shall be established in accordance with the applicable provisions of ACI 214.3R. Test records from which a standard deviation is calculated shall represent materials, quality control procedures, and conditions similar to those expected; shall represent concrete produced to meet a specified strength or strengths (f'c) within 7 MPa of that specified for proposed work; and shall consist of at least 30 consecutive tests. A strength test shall be the average of the strengths of two cylinders made from the same sample of concrete and tested at 28 days. Required average compressive strength f'cr used as the basis for selection of concrete proportions shall be the larger of the equations that follow using the standard deviation as determined above:

$$f'cr = f'c + 1.34S$$
$$f'cr = f'c + 2.33S - 500$$

Where S = standard deviation

Where a concrete production facility does not have test records meeting the requirements above but does have a record based on 15 to 29 consecutive tests, a standard deviation shall be established as the product of the calculated standard deviation and a modification factor from the following table:

NUMBER OF TESTS	MODIFICATION FACTOR FOR STANDARD DEVIATION
15	1.16
20	1.08
25	1.03
30 or more	1.00

1.5.3.2 Computations without Previous Test Records

When a concrete production facility does not have sufficient field strength test records for calculation of the standard deviation, the required average strength f'cr shall be determined as follows:

a. If the specified compressive strength f'c is less than 20 Mpa,

f'cr = f'c + 6.9 MPa

b. If the specified compressive strength f'c is 20 to 35 Mpa,

f'cr = f'c + 8.3 MPa

c. If the specified compressive strength f'c is over 35 MPa,

f'cr = f'c + 9.7 MPa

1.5.4 Average Flexural Strength Required for Mixtures

The mixture proportions selected during mixture design studies for flexural strength mixtures and the mixture used during concrete production shall be designed and adjusted during concrete production as approved, except that the overdesign for average flexural strength shall simply be 15 percent greater than the specified flexural strength at all times.

1.6 STORAGE OF MATERIALS

Cement and other cementitious materials shall be stored in weathertight buildings, bins, or silos which will exclude moisture and contaminants and keep each material completely separated. Aggregate stockpiles shall be arranged and used in a manner to avoid excessive segregation and to prevent contamination with other materials or with other sizes of aggregates. Aggregate shall not be stored directly on ground unless a sacrificial layer is left undisturbed. Reinforcing bars and accessories shall be stored above the ground on platforms, skids or other supports. Other materials shall be stored in such a manner as to avoid contamination and deterioration. Admixtures which have been in storage at the project site for longer than 6 months or which have been subjected to freezing shall not be used unless retested and proven to meet the

specified requirements. Materials shall be capable of being accurately identified after bundles or containers are opened.

1.7 GOVERNMENT ASSURANCE INSPECTION AND TESTING

Day-to day inspection and testing shall be the responsibility of the Contractor Quality Control (CQC) staff. However, representatives of the Contracting Officer can and will inspect construction as considered appropriate and will monitor operations of the Contractor's CQC staff. Government inspection or testing will not relieve the Contractor of any of his CQC responsibilities.

1.7.1 Materials

The Government may sample and test aggregates, cementitious materials, other materials, and concrete to determine compliance with the specifications as considered appropriate. The Contractor shall provide facilities and labor as may be necessary for procurement of representative test samples. Samples of aggregates will be obtained at the point of batching in accordance with ASTM D 75. Other materials will be sampled from storage at the jobsite or from other locations as considered appropriate. Samples may be placed in storage for later testing when appropriate.

1.7.2 Fresh Concrete

Fresh concrete will be sampled by the Contractor as delivered in accordance with ASTM C 172 and tested in accordance with these specifications, as considered necessary.

1.7.3 Hardened Concrete

Tests on hardened concrete may be performed by the Government when such tests are considered necessary.

1.7.4 Inspection

Concrete operations may be tested and inspected by the Government as the project progresses. Failure to detect defective work or material will not prevent rejection later when a defect is discovered nor will it obligate the Government for final acceptance.

PART 2 PRODUCTS

2.1 CEMENTITIOUS MATERIALS

Cementitious Materials shall be portland cement, or portland cement in combination with pozzolan and shall conform to appropriate specifications listed below. Use of cementitious materials in concrete which will have surfaces exposed in the completed structure shall be restricted so there is no change in color, source, or type of cementitious material.

2.1.1 Portland Cement

ASTM C 150, Type I, low alkali with a maximum 15 percent amount of tricalcium aluminate or Type II, low alkali, including false set requirements.

2.1.2 High-Early-Strength Portland Cement

ASTM C 150, Type III with tricalcium aluminate limited to 5 percent, low alkali. Type III cement shall be used only in isolated instances and only when approved in writing.

2.1.3 Pozzolan (Fly Ash)

ASTM C 618, Class F with the optional requirements for multiple factor, drying shrinkage, and uniformity from Table 2A of ASTM C 618. Requirement for maximum alkalies from Table 1A of ASTM C 618 shall apply. If pozzolan is used, it shall never be less than 15 percent nor more than 35 percent by weight of the total cementitious material.

2.2 AGGREGATES

Aggregates shall conform to the following.

2.2.1 Fine Aggregate

Fine aggregate shall conform to the quality and gradation requirements of ASTM C 33.

2.2.2 Coarse Aggregate

Coarse aggregate shall conform to ASTM C 33, Class 5S, size designation 57 or 67.

2.3 CHEMICAL ADMIXTURES

Chemical admixtures, when required or permitted, shall conform to the appropriate specification listed. Admixtures shall be furnished in liquid form and of suitable concentration for easy, accurate control of dispensing.

2.3.1 Air-Entraining Admixture

ASTM C 260 and shall consistently entrain the air content in the specified ranges under field conditions.

2.3.2 Accelerating Admixture

ASTM C 494, Type C or E, except that calcium chloride or admixtures containing calcium chloride shall not be used.

2.3.3 Water-Reducing or Retarding Admixture

ASTM C 494, Type A, B, or D, except that the 6-month and 1-year compressive and flexural strength tests are waived.

2.3.4 High-Range Water Reducer

ASTM C 494, Type F or G, except that the 6-month and 1-year strength requirements are waived. The admixture shall be used only when approved in writing, such approval being contingent upon particular

mixture control as described in the Contractor's Quality Control Plan and upon performance of separate mixture design studies.

2.3.5 Other Chemical Admixtures

Chemical admixtures for use in producing flowing concrete shall comply with ASTM C 1017, Type I or II. These admixtures shall be used only when approved in writing, such approval being contingent upon particular mixture control as described in the Contractor's Quality Control Plan and upon performance of separate mixture design studies.

2.4 CURING MATERIALS

2.4.1 Impervious-Sheet

Impervious-sheet materials shall conform to ASTM C 171, type optional, except, that polyethylene sheet shall not be used.

2.4.2 Membrane-Forming Compound

Membrane-Forming curing compound shall conform to ASTM C 309, Type 1-D or 2, except that only a styrene acrylate or chlorinated rubber compound meeting Class B requirements shall be used for surfaces that are to be painted or are to receive bituminous roofing, or waterproofing, or floors that are to receive adhesive applications of resilient flooring. The curing compound selected shall be compatible with any subsequent paint, roofing, waterproofing, or flooring specified. Nonpigmented compound shall contain a fugitive dye, and shall have the reflective requirements in ASTM C 309 waived.

2.4.3 Burlap and Cotton Mat

Burlap and cotton mat used for curing shall conform to AASHTO M 182.

2.5 WATER

Water for mixing and curing shall be fresh, clean, potable, and free of injurious amounts of oil, acid, salt, or alkali, except that non-potable water may be used if it meets the requirements of COE CRD-C 400.

2.6 NONSHRINK GROUT

Nonshrink grout shall conform to ASTM C 1107, Grade A, B, or C, and shall be a commercial formulation suitable for the proposed application.

2.7 LATEX BONDING AGENT

Latex agents for bonding fresh to hardened concrete shall conform to ASTM C 1059.

2.8 EPOXY RESIN

Epoxy resins for use in repairs shall conform to ASTM C 881, Type V, Grade 2. Class as appropriate to the existing ambient and surface temperatures.

2.9 EMBEDDED ITEMS

Embedded items shall be of the size and type indicated or as needed for the application. Dovetail slots shall be galvanized steel. Hangers for suspended ceilings shall be as specified in SECTION: ACOUSTICAL CEILINGS. Inserts for shelf angles and bolt hangers shall be of malleable iron or cast or wrought steel.

2.10 PERIMETER INSULATION

Perimeter insulation shall be polystyrene conforming to ASTM C 578, Type II; polyurethane conforming to ASTM C 591, Type II; or cellular glass conforming to ASTM C 552, Type I or IV.

2.11 VAPOR BARRIER

Vapor barrier shall be polyethylene sheeting with a minimum thickness of 0.15 mm or other equivalent material having a vapor permeance rating not exceeding 30 nanograms per Pascal per second per square meter as determined in accordance with ASTM E 96.

2.12 JOINT MATERIALS

2.12.1 Joint Fillers, Sealers, and Waterstops

Expansion joint fillers shall be preformed materials conforming to ASTM D 1752. Materials for waterstops shall be in accordance with SECTION 03150 EXPANSION JOINTS, CONTRACTION JOINTS, AND WATERSTOPS. Materials for and sealing of joints shall conform to the requirements of SECTION 07900 JOINT SEALING.

2.12.2 Contraction Joints in Slabs

Contraction joints in slabs shall be sawed.

PART 3 EXECUTION

3.1 PREPARATION FOR PLACING

Before commencing concrete placement, the following shall be performed. Surfaces to receive concrete shall be clean and free from frost, ice, mud, and water. Forms shall be in place, cleaned, coated, and adequately supported, in accordance with SECTION 03100 STRUCTURAL CONCRETE FORMWORK. Reinforcing steel shall be in place, cleaned, tied, and adequately supported, in accordance with SECTION 03200 CONCRETE REINFORCEMENT. Transporting and conveying equipment shall be in-place, ready for use, clean, and free of hardened concrete and foreign material. Equipment for consolidating concrete shall be at the placing site and in proper working order. Equipment and material for curing and for protecting concrete from weather or mechanical damage shall be at the placing site, in proper working condition and in sufficient amount for the entire placement. When hot, windy conditions during concreting appear probable, equipment and material shall be at the placing site to provide windbreaks, shading, fogging, or other action to prevent plastic shrinkage cracking or other damaging drying of the concrete.

3.1.1 Foundations

3.1.1.1 Concrete on Earth Foundations

Earth (subgrade or base) surfaces upon which concrete is to be placed shall be clean, damp, and free from debris, frost, ice, and standing or running water. Prior to placement of concrete, the foundation shall be well drained and shall be satisfactorily graded and uniformly compacted.

3.1.2 Vapor Barrier

Vapor barrier shall be provided beneath the interior on-grade concrete floor slabs. The greatest widths and lengths practicable shall be used to eliminate joints wherever possible. Joints shall be lapped a minimum of 300 mm. Torn, punctured, or damaged vapor barrier material shall be removed and new vapor barrier shall be provided prior to placing concrete. For minor repairs, patches may be made using laps of at least 300 mm. Lapped joints shall be sealed and edges patched with pressure-sensitive adhesive or tape not less than 50 mm wide and compatible with the membrane. Vapor barrier shall be placed directly on underlying subgrade, base course, or capillary water barrier, unless it consists of crushed material or large granular material which could puncture the vapor barrier. In this case, the surface shall be choked with a light layer of sand, as approved, before placing the vapor barrier.

3.1.3 Perimeter Insulation

Perimeter insulation shall be installed at locations indicated. Adhesive shall be used where insulation is applied to the interior surface of foundation walls and may be used for exterior application.

3.1.4 Embedded Items

Before placement of concrete, care shall be taken to determine that all embedded items are firmly and securely fastened in place as indicated on the drawings, or required. Conduit and other embedded items shall be clean and free of oil and other foreign matter such as loose coatings or rust, paint, and scale. The embedding of wood in concrete will be permitted only when specifically authorized or directed. Voids in sleeves, inserts, and anchor slots shall be filled temporarily with readily removable materials to prevent the entry of concrete into voids. Welding shall not be performed on embedded metals within 600 mm of the surface of the concrete. Tack welding shall not be performed on or to embedded items.

3.2 CONCRETE PRODUCTION

3.2.1 Batching, Mixing, and Transporting Concrete

Concrete shall either be furnished from a ready-mixed concrete plant. Ready-mixed concrete shall be batched, mixed, and transported in accordance with ASTM C 94, except as otherwise specified. Truck mixers, agitators, and nonagitating transporting units shall comply with NRMCA TMMB-01. Ready-mix plant equipment and facilities shall be certified in accordance with NRMCA QC 3. Approved batch tickets shall be furnished for each load of ready-mixed concrete. Site-mixed concrete shall conform to the following subparagraphs.

3.2.1.1 General

The batching plant shall be located off site close to the project. The batching, mixing and placing system shall have a capacity of at least 100 cubic meters per hour. The batching plant shall conform to the requirements of NRMCA CPMB 100 and as specified; however, rating plates attached to batch plant equipment are not required.

3.2.1.2 Batching Equipment

The batching controls shall be semiautomatic or automatic, as defined in NRMCA CPMB 100. A semiautomatic batching system shall be provided with interlocks such that the discharge device cannot be actuated until the indicated material is within the applicable tolerance. The batching system shall be equipped with accurate recorder or recorders that meet the requirements of NRMCA CPMB 100. The weight of water and admixtures shall be recorded if batched by weight. Separate bins or compartments shall be provided for each size group of aggregate and type of cementitious material, to prevent intermingling at any time. Aggregates shall be weighed either in separate weigh batchers with individual scales or, provided the smallest size is batched first, cumulatively in one weigh batcher on one scale. Aggregate shall not be weighed in the same batcher with cementitious material. If both portland cement and other cementitious material are used, they may be batched cumulatively, provided that the portland cement is batched first. Water may be measured by weight or volume. Water shall not be weighed or measured cumulatively with another ingredient. Filling and discharging valves for the water metering or batching system shall be so interlocked that the discharge valve cannot be opened before the filling valve is fully closed. Piping for water and for admixtures shall be free from leaks and shall be properly valved to prevent backflow or siphoning. Admixtures shall be furnished as a liquid of suitable concentration for easy control of dispensing. An adjustable, accurate, mechanical device for measuring and dispensing each admixture shall be provided. Each admixture dispenser shall be interlocked with the batching and discharging operation of the water so that each admixture is separately batched and individually discharged automatically in a manner to obtain uniform distribution throughout the water as it is added to the batch in the specified mixing period. When use of truck mixers makes this requirement impractical, the admixture dispensers shall be interlocked with the sand batchers. Different admixtures shall not be combined prior to introduction in water and shall not be allowed to intermingle until in contact with the cement. Admixture dispensers shall have suitable devices to detect and indicate flow during dispensing or have a means for visual observation. The plant shall be arranged so as to facilitate the inspection of all operations at all times. Suitable facilities shall be provided for obtaining representative samples of aggregates from each bin or compartment, and for sampling and calibrating the dispensing of cementitious material, water, and admixtures. Filling ports for cementitious materials bins or silos shall be clearly marked with a permanent sign stating the contents.

3.2.1.3 Scales

The weighing equipment shall conform to the applicable requirements of CPMB Concrete Plant Standard, and of NIST HB 44, except that the accuracy shall be plus or minus 0.2 percent of scale capacity. The Contractor shall provide standard test weights and any other auxiliary equipment required for checking the operating performance of each scale or other measuring devices. The tests shall be made at the specified frequency in the presence of a Government inspector. The weighing equipment shall be arranged so that the plant operator can conveniently observe all dials or indicators.

3.2.1.4 Batching Tolerances

(A) Tolerances with Weighing Equipment

MATERIAL	PERCENT OF REQUIRED WEIGHT
Cementitious materials	0 to plus 2
Aggregate	plus or minus 2
Water	plus or minus 1
Chemical admixture	0 to plus 6

(B) Tolerances with Volumetric Equipment

For volumetric batching equipment used for water and admixtures, the following tolerances shall apply to the required volume of material being batched:

MATERIAL	PERCENT OF REQUIRED MATERIAL
Water:	plus or minus 1 percent
Chemical admixtures:	0 to plus 6 percent

3.2.1.5 Moisture Control

The plant shall be capable of ready adjustment to compensate for the varying moisture content of the aggregates and to change the weights of the materials being batched.

3.2.1.6 Concrete Mixers

Mixers shall be stationary mixers or truck mixers. Mixers shall be capable of combining the materials into a uniform mixture and of discharging this mixture without segregation. The mixers shall not be charged in excess of the capacity recommended by the manufacturer. The mixers shall be operated at the drum or mixing blade speed designated by the manufacturer. The mixers shall be maintained in satisfactory operating condition, and the mixer drums shall be kept free of hardened concrete. Should any mixer at any time produce unsatisfactory results, its use shall be promptly discontinued until it is repaired.

3.2.1.7 Stationary Mixers

Concrete plant mixers shall be drum-type mixers of tilting, nontilting, horizontal-shaft, or vertical-shaft type, or shall be pug mill type and shall be provided with an acceptable device to lock the discharge mechanism until the required mixing time has elapsed. The mixing time and uniformity shall conform to all the requirements in ASTM C 94 applicable to central-mixed concrete.

3.2.1.8 Truck Mixers

Truck mixers, the mixing of concrete therein, and concrete uniformity shall conform to the requirements of ASTM C 94. A truck mixer may be used either for complete mixing (transit-mixed) or to finish the partial mixing done in a stationary mixer (shrink-mixed). Each truck shall be equipped with two counters from which it is possible to determine the number of revolutions at mixing speed and the number of revolutions at agitating speed. Or, if approved in lieu of this, the number of revolutions shall be marked on the batch tickets. Water shall not be added at the placing site unless specifically approved; and in no case shall it exceed the specified w/c. Any such water shall be injected at the base of the mixer, not at the discharge end.

3.3 TRANSPORTING CONCRETE TO PROJECT SITE

Concrete shall be transported to the placing site in truck mixers, agitators, nonagitating transporting equipment conforming to NRMCA TMMB-01 or by approved pumping equipment or conveyors.

3.4 CONVEYING CONCRETE ON SITE

Concrete shall be conveyed from mixer or transporting unit to forms as rapidly as possible and within the time interval specified by methods which will prevent segregation or loss of ingredients using following equipment. Conveying equipment shall be cleaned before each placement.

3.4.1 Buckets

The interior hopper slope shall be not less than 58 degrees from the horizontal, the minimum dimension of the clear gate opening shall be at least 5 times the nominal maximum-size aggregate, and the area of the gate opening shall not be less than 0.2 square meters. The maximum dimension of the gate opening shall not be greater than twice the minimum dimension. The bucket gates shall be essentially grout tight when closed and may be manually, pneumatically, or hydraulically operated except that buckets larger than 1.5 cubic meters shall not be manually operated. The design of the bucket shall provide means for positive regulation of the amount and rate of deposit of concrete in each dumping position.

3.4.2 Transfer Hoppers

Concrete may be charged into nonagitating hoppers for transfer to other conveying devices. Transfer hoppers shall be capable of receiving concrete directly from delivery vehicles and shall have conical-shaped discharge features. The transfer hopper shall be equipped with a hydraulically operated gate and with a means of external vibration to effect complete discharge. Concrete shall not be held in nonagitating transfer hoppers more than 30 minutes.

3.4.3 Trucks

Truck mixers operating at agitating speed or truck agitators used for transporting plant-mixed concrete shall conform to the requirements of ASTM C 94. Nonagitating equipment shall be used only for transporting plant-mixed concrete over a smooth road and when the hauling time is less than 15 minutes. Bodies of nonagitating equipment shall be smooth, watertight, metal containers specifically designed to transport concrete, shaped with rounded corners to minimize segregation, and equipped with gates that will permit positive control of the discharge of the concrete.

3.4.4 Chutes

When concrete can be placed directly from a truck mixer, agitator, or nonagitating equipment, the chutes normally attached to this equipment by the manufacturer may be used. A discharge deflector shall be used when required by the Contracting Officer. Separate chutes and other similar equipment will not be permitted for conveying concrete.

3.4.5 Belt Conveyors

Belt conveyors shall be designed and operated to assure a uniform flow of concrete from mixer to final place of deposit without segregation of ingredients or loss of mortar and shall be provided with positive

means, such as discharge baffle or hopper , for preventing segregation of the concrete at the transfer points and the point of placing. Belt conveyors shall be constructed such that the idler spacing shall not exceed 900 mm. The belt speed shall be a minimum of 90 meters per minute and a maximum of 225 meters per minute. If concrete is to be placed through installed horizontal or sloping reinforcing bars, the conveyor shall discharge concrete into a pipe or elephant truck that is long enough to extend through the reinforcing bars.

3.4.6 Concrete Pumps

Concrete may be conveyed by positive displacement pump when approved. The pumping equipment shall be piston or squeeze pressure type; pneumatic placing equipment shall not be used. The pipeline shall be rigid steel pipe or heavy-duty flexible hose. The inside diameter of the pipe shall be at least 3 times the nominal maximum-size coarse aggregate in the concrete mixture to be pumped but not less than 100 mm. Aluminum pipe shall not be used.

3.5 PLACING CONCRETE

Mixed concrete shall be discharged within 1-1/2 hours or before the mixer drum has revolved 300 revolutions, whichever comes first after the introduction of the mixing water to the cement and aggregates. When the concrete temperature exceeds 30 degrees C, the time shall be reduced to 45 minutes. Concrete shall be placed within 15 minutes after it has been discharged from the transporting unit. Concrete shall be handled from mixer or transporting unit to forms in a continuous manner until the approved unit of operation is completed. Adequate scaffolding, ramps and walkways shall be provided so that personnel and equipment are not supported by in-place reinforcement. Placing will not be permitted when the sun, heat, wind, or limitations of facilities furnished by the Contractor prevent proper consolidation, finishing and curing. Sufficient placing capacity shall be provided so that concrete can be kept free of cold joints.

3.5.1 Depositing Concrete

Concrete shall be deposited as close as possible to its final position in the forms, and there shall be no vertical drop greater than 1.5 meters except where suitable equipment is provided to prevent segregation and where specifically authorized. Depositing of the concrete shall be so regulated that it will be effectively consolidated in horizontal layers not more than 300 mm thick, except that all slabs shall be placed in a single layer. Concrete to receive other construction shall be screeded to the proper level. Concrete shall be deposited continuously in one layer or in layers so that fresh concrete is deposited on in-place concrete that is still plastic. Fresh concrete shall not be deposited on concrete that has hardened sufficiently to cause formation of seams or planes of weakness within the section. Concrete that has surface dried, partially hardened, or contains foreign material shall not be used. When temporary spreaders are used in the forms, the spreaders shall be removed as their service becomes unnecessary. Concrete shall not be placed in slabs over columns and walls until concrete in columns and walls has been in-place at least two hours or until the concrete begins to lose its plasticity. Concrete for beams, girders, brackets, column capitals, haunches, and drop panels shall be placed at the same time as concrete for adjoining slabs.

3.5.2 Consolidation

Immediately after placing, each layer of concrete shall be consolidated by internal vibrators, except for slabs 100 mm thick or less. The vibrators shall at all times be adequate in effectiveness and number to properly consolidate the concrete; a spare vibrator shall be kept at the jobsite during all concrete placing operations. The vibrators shall have a frequency of not less than 10,000 vibrations per minute, an

amplitude of at least 0.6 mm, and the head diameter shall be appropriate for the structural member and the concrete mixture being placed. Vibrators shall be inserted vertically at uniform spacing over the area of placement. The distance between insertions shall be approximately 1-1/2 times the radius of action of the vibrator so that the area being vibrated will overlap the adjacent just-vibrated area by a reasonable amount. The vibrator shall penetrate rapidly to the bottom of the layer and at least 150 mm into the preceding layer if there is such. Vibrator shall be held stationary until the concrete is consolidated and then vertically withdrawn slowly while operating. Form vibrators shall not be used unless specifically approved and unless forms are constructed to withstand their use. Vibrators shall not be used to move concrete within the forms. Slabs 100 mm and less in thickness shall be consolidated by properly designed vibrating screeds or other approved technique. Excessive vibration of lightweight concrete resulting in segration or flotation of coarse aggregate shall be prevented. Frequency and amplitude of vibrators shall be determined in accordance with COE CRD-C 521. Grate tampers ("jitterbugs") shall not be used.

3.5.3 Cold Weather Requirements

Special protection measures, approved by the Contracting Officer, shall be used if freezing temperatures are anticipated before the expiration of the specified curing period. The ambient temperature of the air where concrete is to be placed and the temperature of surfaces to receive concrete shall be not less than 5 degrees C. The temperature of the concrete when placed shall be not less than 10 degrees C nor more than 25 degrees C. Heating of the mixing water or aggregates will be required to regulate the concrete placing temperature. Materials entering the mixer shall be free from ice, snow, or frozen lumps. Salt, chemicals or other materials shall not be incorporated in the concrete to prevent freezing. Upon written approval, an accelerating admixture conforming to ASTM C 494, Type C or E may be used, provided it contains no calcium chloride. Calcium chloride shall not be used.

3.5.4 Hot Weather Requirements

When the ambient temperature during concrete placing is expected to exceed 30 degrees C, the concrete shall be placed and finished with procedures previously submitted and as specified herein. The concrete temperature at time of delivery to the forms shall not exceed the temperature shown in the table below when measured in accordance with ASTM C 1064. Cooling of the mixing water or aggregates or placing concrete in the cooler part of the day may be required to obtain an adequate placing temperature. A retarder may be used, as approved, to facilitate placing and finishing. Steel forms and reinforcements shall be cooled as approved prior to concrete placement when steel temperatures are greater than 49 degrees C. Conveying and placing equipment shall be cooled if necessary to maintain proper concrete-placing temperature.

Maximum Allowable Concrete Placing Temperature

Relative Humidity, Percent, During Time of Concrete Placement	Maximum Allowable Concrete Temperature, Degrees
Greater than 60	33 C
40-60	30 C
Less than 40	27 C

3.5.5 Prevention of Plastic Shrinkage Cracking

During hot weather with low humidity, and particularly with appreciable wind, as well as interior placements when space heaters produce low humidity, the Contractor shall be alert to the tendency for plastic shrinkage cracks to develop and shall institute measures to prevent this. Particular care shall be taken if plastic shrinkage cracking is potentially imminent and especially if it has developed during a previous placement. Periods of high potential for plastic shrinkage cracking can be anticipated by use of Fig. 2.1.5 of ACI 305R. In addition the concrete placement shall be further protected by erecting shades and windbreaks and by applying fog sprays of water, sprinkling, ponding or wet covering. Plastic shrinkage cracks that occur shall be filled by injection of epoxy resin as directed, after the concrete hardens. Plastic shrinkage cracks shall never be troweled over or filled with slurry.

3.5.6 Placing Flowable Concrete

If a plasticizing admixture conforming to ASTM C 1017 is used or if a Type F or G high range water reducing admixture is permitted to increase the slump, the concrete shall meet all requirements of paragraph GENERAL REQUIREMENTS in PART 1. Extreme care shall be used in conveying and placing the concrete to avoid segregation. Consolidation and finishing shall meet all requirements of paragraphs Placing Concrete, Finishing Formed Surfaces, and Finishing Unformed Surfaces. No relaxation of requirements to accommodate flowable concrete will be permitted.

3.6 JOINTS

Joints shall be located and constructed as indicated or approved. Joints not indicated on the drawings shall be located and constructed to minimize the impact on the strength of the structure. In general, such joints shall be located near the middle of the spans of supported slabs, beams, and girders unless a beam intersects a girder at this point, in which case the joint in the girder shall be offset a distance equal to twice the width of the beam. Joints in walls and columns shall be at the underside of floors, slabs, beams, or girders and at the tops of footings or floor slabs, unless otherwise approved. Joints shall be perpendicular to the main reinforcement. All reinforcement shall be continued across joints; except that reinforcement or other fixed metal items shall not be continuous through expansion joints, or through construction or contraction joints in slabs on grade. Reinforcement shall be 50 mm clear from each joint. Except where otherwise indicated, construction joints between interior slabs on grade and vertical surfaces shall consist of 1.5 kg per square meter asphalt-saturated felt, extending for the full depth of the slab. The perimeters of the slabs shall be free of fins, rough edges, spalling, or other unsightly appearance. Reservoir for sealant for construction and contraction joints in slabs shall be formed to the dimensions shown on the drawings by removing snap-out joint-forming inserts, by sawing sawable inserts, or by sawing to widen the top portion of sawed joints. Joints to be sealed shall be cleaned and sealed as indicated and in accordance with SECTION 07900 JOINT SEALING.

3.6.1 Construction Joints

For concrete other than slabs on grade, construction joints shall be located as indicated. Concrete shall be placed continuously so that each unit is monolithic in construction. Fresh concrete shall not be placed against adjacent hardened concrete until it is at least 24 hours old. Construction joints shall be located as indicated or approved. Where concrete work is interrupted by weather, end of work shift or other similar type of delay, location and type of construction joint shall be subject to approval of the Contracting Officer. Unless otherwise indicated and except for slabs on grade, reinforcing steel shall extend through construction joints. Construction joints in slabs on grade shall be keyed or doweled as shown. Concrete columns, walls, or piers shall be in place at least 2 hours, or until the concrete begins to lose its plasticity, before placing concrete for beams, girders, or slabs thereon. In walls having door or window openings, lifts

shall terminate at the top and bottom of the opening. Other lifts shall terminate at such levels as to conform to structural requirements or architectural details. Where horizontal construction joints in walls or columns are required, a strip of 25 mm square-edge lumber, bevelled and oiled to facilitate removal, shall be tacked to the inside of the forms at the construction joint. Concrete shall be placed to a point 25 mm above the underside of the strip. The strip shall be removed 1 hour after the concrete has been placed, and any irregularities in the joint line shall be leveled off with a wood float, and all laitance shall be removed. Prior to placing additional concrete, horizontal construction joints shall be prepared as specified in paragraph PREVIOUSLY PLACED CONCRETE.

3.6.2 Contraction Joints in Slabs on Grade

Contraction joints shall be located and detailed as shown on the drawings. Contraction Joints shall be produced by forming a weakened plane in the concrete slab by sawing a continuous slot with a concrete saw. The weakened plane shall be 1/4 the depth of the slab thickness and between 3 and 5 mm wide. For saw-cut joints, cutting shall be timed properly with the set of the concrete. Cutting shall be started as soon as the concrete has hardened sufficiently to prevent ravelling of the edges of the saw cut. Cutting shall be completed before shrinkage stresses become sufficient to produce cracking. Reservoir for joint sealant shall be formed as previously specified.

3.6.3 Expansion Joints

Installation of expansion joints and sealing of these joints shall conform to the requirements of SECTION 03150 EXPANSION JOINTS, CONTRACTION JOINTS, AND WATERSTOPS and SECTION 07900 JOINT SEALING.

3.6.4 Waterstops

Waterstops shall be installed in conformance with the locations and details shown on the drawings using materials and procedures specified in SECTION 03150 EXPANSION JOINTS, CONTRACTION JOINTS, AND WATERSTOPS.

3.6.5 Dowels

Dowels shall be installed at the locations shown on the drawings and to the details shown, using materials and procedures specified in SECTION 03200 CONCRETE REINFORCEMENT and herein. Conventional smooth "paving" dowels shall be installed in slabs using approved methods to hold the dowel in place during concreting within a maximum alignment tolerance of 1 mm in 100 mm. Care shall be taken during placing adjacent to and around dowels to ensure there is no displacement of the dowel and that the concrete completely embeds the dowel and is thoroughly consolidated.

3.7 FINISHING FORMED SURFACES

Forms, form materials, and form construction are specified in SECTION 03100 STRUCTURAL CONCRETE FORMWORK. Finishing of formed surfaces shall be as specified herein. Unless another type of architectural or special finish is specified, surfaces shall be left with the texture imparted by the forms except that defective surfaces shall be repaired. Unless painting of surfaces is required, uniform color of the concrete shall be maintained by use of only one mixture without changes in materials or proportions for any structure or portion of structure that requires a Class A or B finish. Except for major defects, as defined hereinafter, surface defects shall be repaired as specified herein within 24 hours after

forms are removed. Repairs of the so-called "plaster-type" will not be permitted in any location. Tolerances of formed surfaces shall conform to the requirements of ACI 117/A117R. These tolerances apply to the finished concrete surface, not to the forms themselves; forms shall be set true to line and grade. Form tie holes requiring repair and other defects whose depth is at least as great as their surface diameter shall be repaired as specified in paragraph Damp-Pack Mortar Repair. Defects whose surface diameter is greater than their depth shall be repaired as specified in paragraph Repair of Major Defects. Repairs shall be finished flush with adjacent surfaces and with the same surface texture. The cement used for all repairs shall be a blend of job cement with white cement proportioned so that the final color after curing and aging will be the same as the adjacent concrete. Concrete with excessive honeycomb, or other defects which affect the strength of the member, will be rejected. Repairs shall be demonstrated to be acceptable and free from cracks or loose or drummy areas at the completion of the contract and, for Class A and B Finishes, shall be inconspicuous. Repairs not meeting these requirements will be rejected and shall be replaced.

3.7.1 Class A Finish and Class B Finish

Class A finish is required for surfaces permanently exposed to public view that require excellent appearance at close range. Class B finish is required for surfaces exposed to public view that do not require the excellent appearance of Class A. Fins, ravelings, and loose material shall be removed, all surface defects over 12 mm in diameter or more than 12 mm deep, shall be repaired and, except as otherwise indicated or as specified in SECTION 03100 STRUCTURAL CONCRETE FORMWORK, holes left by removal of form ties shall be reamed and filled. Defects more than 12 mm in diameter shall be cut back to sound concrete, but in all cases at least 25 mm deep. The Contractor shall prepare a sample panel for approval (as specified in PART 1) before commencing repair, showing that the surface texture and color match will be attained. Metal tools shall not be used to finish repairs in Class A surfaces.

3.7.2 Class C and Class D Finish

Class C finish is required for concealed surfaces not exposed to view and for all surfaces not covered by Class A, B, or D finish. Class D finish is required for surfaces where roughness and irregularities are not objectionable. Fins, ravelings, and loose material shall be removed, and, except as otherwise indicated or as specified in SECTION 03100 STRUCTURAL CONCRETE FORMWORK, holes left by removal of form ties shall be reamed and filled. Honeycomb and other defects more than 12 mm deep or more than 50 mm in diameter shall be repaired. Defects more than 50 mm in diameter shall be cut back to sound concrete, but in all cases at least 25 mm deep.

3.8 REPAIRS

3.8.1 Damp-Pack Mortar Repair

Form tie holes requiring repair and other defects whose depth is at least as great as their surface diameter but not over 100 mm shall be repaired by the damp-pack mortar method. Form tie holes shall be reamed and other similar defects shall be cut out to sound concrete. The void shall then be thoroughly cleaned, thoroughly wetted, brush-coated with a thin coat of neat cement grout and filled with mortar. Mortar shall be a stiff mix of 1 part portland cement to 2 parts fine aggregate passing the 1.18 mm sieve, and minimum amount of water. Only sufficient water shall be used to produce a mortar which, when used, will stick together on being molded into a ball by a slight pressure of the hands and will not exude water but will leave the hands damp. Mortar shall be mixed and allowed to stand for 30 to 45 minutes before use with remixing performed immediately prior to use. Mortar shall be thoroughly tamped in place in thin layers using a hammer and hardwood block. Holes passing entirely through walls shall be completely filled from

the inside face by forcing mortar through to the outside face. All holes shall be packed full. Damp-pack repairs shall be moist cured for at least 48 hours.

3.8.2 Repair of Major Defects

Major defects will be considered to be those more than 12 mm deep or, for Class A and B finishes, more than 12 mm in diameter and, for Class C and D finishes, more than 50 mm in diameter. Also included are any defects of any kind whose depth is over 100 mm or whose surface diameter is greater than their depth. Major defects shall be repaired as specified below.

3.8.2.1 Surface Application of Mortar Repair

Defective concrete shall be removed, and removal shall extend into completely sound concrete. Approved equipment and procedures which will not cause cracking or microcracking of the sound concrete shall be used. If reinforcement is encountered, concrete shall be removed so as to expose the reinforcement for at least 50 mm on all sides. All such defective areas greater than 7800 square mm shall be outlined by saw cuts at least 25 mm deep. Defective areas less than 7800 square mm shall be outlined by a 25 mm deep cut with a core drill in lieu of sawing. All saw cuts shall be straight lines in a rectangular pattern in line with the formwork panels. After concrete removal, the surface shall be thoroughly cleaned by high pressure washing to remove all loose material. Surfaces shall be kept continually saturated for the first 12 of the 24 hours immediately before placing mortar and shall be damp but not wet at the time of commencing mortar placement. The Contractor, at his option, may use either hand-placed mortar or mortar placed with a mortar gun. If hand-placed mortar is used, the edges of the cut shall be perpendicular to the surface of the concrete. The prepared area shall be brush-coated with a thin coat of neat cement grout. The repair shall then be made using a stiff mortar, preshrunk by allowing the mixed mortar to stand for 30 to 45 minutes and then remixed, thoroughly tamped into place in thin layers. If hand-placed mortar is used, the Contractor shall test each repair area for drumminess by firm tapping with a hammer and shall inspect for cracks, both in the presence of the Contracting Officer's representative, immediately before completion of the contract, and shall replace any showing drumminess or cracking. If mortar placed with a mortar gun is used, the gun shall be a small compressed air-operated gun to which the mortar is slowly hand fed and which applies the mortar to the surface as a high-pressure stream, as approved. Repairs made using shotcrete equipment will not be accepted. The mortar used shall be the same mortar as specified for damp-pack mortar repair. If gun-placed mortar is used, the edges of the cut shall be beveled toward the center at a slope of 1:1. All surface applied mortar repairs shall be continuously moist cured for at least 7 days. Moist curing shall consist of several layers of saturated burlap applied to the surface immediately after placement is complete and covered with polyethylene sheeting, all held closely in place by a sheet of plywood or similar material rigidly braced against it. Burlap shall be kept continually wet.

3.8.2.2 Repair of Deep and Large Defects

Deep and large defects will be those that are more than 150 mm deep and also have an average diameter at the surface more than 450 mm or that are otherwise so identified by the Contracting Officer, or defects which affect the strength of the structure shall not be repaired and that portion of the structure shall be completely removed and replaced

3.9 FINISHING UNFORMED SURFACES

The finish of all unformed surfaces shall meet the requirements of paragraph Tolerances in PART 1, when tested as specified herein.

3.9.1 General

The ambient temperature of spaces adjacent to unformed surfaces being finished and of the base on which concrete will be placed shall be not less than 10 degrees C. In hot weather all requirements of paragraphs Hot Weather Requirements and Prevention of Plastic Shrinkage Cracking shall be met. Unformed surfaces that are not to be covered by additional concrete or backfill shall have a float finish, with additional finishing as specified below, and shall be true to the elevation shown on the drawings. Surfaces to receive additional concrete or backfill shall be brought to the elevation shown on the drawings, properly consolidated, and left true and regular. Unless otherwise shown on the drawings, exterior surfaces shall be sloped for drainage, as directed. Where drains are provided, interior floors shall be evenly sloped to the drains. Joints shall be carefully made with a jointing or edging tool. The finished surfaces shall be protected from stains or abrasions. Grate tampers or "jitterbugs" shall not be used for any surfaces. The dusting of surfaces with dry cement or other materials or the addition of any water during finishing shall not be permitted. If bleedwater is present prior to finishing, the excess water shall be carefully dragged off or removed by absorption with porous materials such as burlap. During finishing operations, extreme care shall be taken to prevent over finishing or working water into the surface; this can cause "crazing" (surface shrinkage cracks which appear after hardening) of the surface. Any slabs with surfaces which exhibit significant crazing shall be removed and replaced. During finishing operations, surfaces shall be checked with a 3.05 meter straightedge, applied in both directions at regular intervals while the concrete is still plastic, to detect high or low areas.

3.9.1.1 Troweled Finish

Areas as indicated on the drawings shall be given a trowel finish. After floating is complete and after the surface moisture has disappeared, unformed surfaces shall be steel-troweled to a smooth, even, dense finish, free from blemishes including trowel marks. In lieu of hand finishing, an approved power finishing machine may be used in accordance with the directions of the machine manufacturer. Additional trowelings shall be performed, either by hand or machine until the surface has been troweled 2-4 times, with waiting period between each, as approved. Care shall be taken to prevent blistering and if such occurs, troweling shall immediately be stopped and operations and surfaces corrected. A final hard steel troweling shall be done by hand, with the trowel tipped, and using hard pressure, when the surface is at a point that the trowel will produce a ringing sound. The finished surface shall be thoroughly consolidated and shall be essentially free of trowel marks and be uniform in texture and appearance. The concrete mixture used for troweled finished areas shall be adjusted, if necessary, in order to provide sufficient fines (cementitious material and fine sand) to finish properly.

3.9.1.2 Broomed

Areas as indicated on the drawings shall be given a broomed finish. After floating, the surface shall be lightly steel troweled, and then carefully scored by pulling a coarse fiber push-type broom across the surface. Brooming shall be transverse to traffic or at right angles to the slope of the slab. After the end of the curing period, the surface shall be vigorously broomed with a coarse fiber broom to remove all loose or semi-detached particles.

3.10 EXTERIOR SLAB AND RELATED ITEMS

3.10.1 Pavements (Not Applicable)

3.10.2 Sidewalks

Portland cement concrete sidewalks shall be constructed in accordance with SECTION: 02770, CONCRETE SIDEWALKS AND CURBS AND GUTTERS.

3.10.3 Curbs and Gutters

Portland cement concrete sidewalks shall be constructed in accordance with SECTION: 02770, CONCRETE SIDEWALKS AND CURBS AND GUTTERS.

3.10.4 Pits and Trenches

Pits and trenches shall be constructed as indicated on the drawings. Bottoms and walls shall be placed monolithically or waterstops and keys, shall be provided as approved.

3.11 CURING AND PROTECTION

3.11.1 General

Concrete shall be cured by an approved method for the period of time given below:

Concrete with Type III cement	3 days
All other concrete	7 days

Immediately after placement, concrete shall be protected from premature drying, extremes in temperatures, rapid temperature change, mechanical injury and damage from rain and flowing water for the duration of the curing period. Air and forms in contact with concrete shall be maintained at a temperature above 10 degrees C for the first 3 days and at a temperature above 0 degrees C for the remainder of the specified curing period. Exhaust fumes from combustion heating units shall be vented to the outside of the enclosure, and heaters and ducts shall be placed and directed so as not to cause areas of overheating and drying of concrete surfaces or to create fire hazards. Materials and equipment needed for adequate curing and protection shall be available and at the site prior to placing concrete. No fire or excessive heat, including welding, shall be permitted near or in direct contact with the concrete at any time. Except as otherwise permitted by paragraph Membrane Forming Curing Compounds, moist curing shall be provided for any areas to receive floor hardener, any paint or other applied coating, or to which other concrete is to be bonded. Concrete containing silica fume shall be initially cured by fog misting during finishing, followed immediately by continuous moist curing. Except for plastic coated burlap, impervious sheeting alone shall not be used for curing.

3.11.2 Moist Curing

Concrete to be moist-cured shall be maintained continuously wet for the entire curing period, commencing immediately after finishing. If water or curing materials used stain or discolor concrete surfaces which are to be permanently exposed, the concrete surfaces shall be cleaned as approved. When wooden forms are left in place during curing, they shall be kept wet at all times. If steel forms are used in hot weather, nonsupporting vertical forms shall be broken loose from the concrete soon after the concrete hardens and curing water continually applied in this void. If the forms are removed before the end of the curing period, curing shall be carried out as on unformed surfaces, using suitable materials. Surfaces shall be cured by ponding, by continuous sprinkling, by continuously saturated burlap or cotton mats, or by continuously

saturated plastic coated burlap. Burlap and mats shall be clean and free from any contamination and shall be completely saturated before being placed on the concrete. The Contractor shall have an approved work system to ensure that moist curing is continuous 24 hours per day.

3.11.3 Membrane Forming Curing Compounds

Concrete may be cured with a nonpigmented curing compound containing a fugitive dye in lieu of moist curing. Membrane curing shall not be used on surfaces that are to receive any subsequent treatment depending on adhesion or bonding to the concrete, including surfaces to which a smooth finish is to be applied or other concrete to be bonded. However, a styrene acrylate or chlorinated rubber compound meeting ASTM C 309, Class B requirements, may be used for surfaces which are to be painted or are to receive bituminous roofing or waterproofing, or floors that are to receive adhesive applications of resilient flooring. The curing compound selected shall be compatible with any subsequent paint, roofing, waterproofing or flooring specified. Membrane curing compound shall not be used on surfaces that are maintained at curing temperatures with free steam. Curing compound shall be applied to formed surfaces immediately after the forms are removed and prior to any patching or other surface treatment except the cleaning of loose sand, mortar, and debris from the surface. All surfaces shall be thoroughly moistened with water. Curing compound shall be applied to slab surfaces as soon as the bleeding water has disappeared, with the tops of joints being temporarily sealed to prevent entry of the compound and to prevent moisture loss during the curing period. The curing compound shall be applied in a two-coat continuous operation by approved motorized power-spraying equipment operating at a minimum pressure of 500 kPa, at a uniform coverage of not more than 10 cubic meters per L for each coat, and the second coat shall be applied perpendicular to the first coat. Concrete surfaces which have been subjected to rainfall within 3 hours after curing compound has been applied shall be resprayed by the method and at the coverage specified. Surfaces on which clear compound is used shall be shaded from direct rays of the sun for the first 3 days. Surfaces coated with curing compound shall be kept free of foot and vehicular traffic, and from other sources of abrasion and contamination during the curing period.

3.11.4 Impervious Sheeting

Horizontal or near horizontal concrete surfaces may be cured using impervious sheets. However, except for plastic coated burlap, impervious sheeting alone shall not be used for curing. Impervious-sheet curing shall only be used on horizontal or nearly horizontal surfaces. Surfaces shall be thoroughly wetted and be completely covered with the sheeting. Sheeting shall be at least 450 mm wider than the concrete surface to be covered. Covering shall be laid with light-colored side up. Covering shall be lapped not less than 300 mm and securely weighted down or shall be lapped not less than 100 mm and taped to form a continuous cover with completely closed joints. The sheet shall be weighted to prevent displacement so that it remains in contact with the concrete during the specified length of curing. Coverings shall be folded down over exposed edges of slabs and secured by approved means. Sheets shall be immediately repaired or replaced if tears or holes appear during the curing period.

3.11.5 Ponding or Immersion

Concrete shall be continually immersed throughout the curing period. Water shall not be more than 10 degrees C less than the temperature of the concrete.

3.11.6 Cold Weather Curing and Protection

When the daily ambient low temperature is less than 0 degrees C the temperature of the concrete shall be maintained above 5 degrees C for the first seven days after placing. During the period of protection removal, the air temperature adjacent to the concrete surfaces shall be controlled so that concrete near the surface will not be subjected to a temperature differential of more than 13 degrees C as determined by suitable temperature measuring devices furnished by the Contractor, as required, and installed adjacent to the concrete surface and 50 mm inside the surface of the concrete. The installation of the thermometers shall be made by the Contractor as directed.

3.12 SETTING BASE PLATES AND BEARING PLATES

After being properly positioned, column base plates, bearing plates for beams and similar structural members, and machinery and equipment base plates shall be set to the proper line and elevation with damp-pack bedding mortar, except where nonshrink grout is indicated. The thickness of the mortar or grout shall be approximately 1/24 the width of the plate, but not less than 20 mm. Concrete and metal surfaces in contact with grout shall be clean and free of oil and grease, and concrete surfaces in contact with grout shall be damp and free of laitance when grout is placed. Nonshrink grout shall be used for as approved.

3.12.1 Damp-Pack Bedding Mortar

Damp-pack bedding mortar shall consist of 1 part cement and 2-1/2 parts fine aggregate having water content such that a mass of mortar tightly squeezed in the hand will retain its shape but will crumble when disturbed. The space between the top of the concrete and bottom of the bearing plate or base shall be packed with the bedding mortar by tamping or ramming with a bar or rod until it is completely filled.

3.12.2 Nonshrink Grout

Nonshrink grout shall be a ready-mixed material requiring only the addition of water. Water content shall be the minimum that will provide a flowable mixture and completely fill the space to be grouted without segregation, bleeding, or reduction of strength.

3.12.2.1 Mixing and Placing of Nonshrink Grout

Mixing and placing shall be in conformance with the material manufacturer's instructions and as specified therein. Ingredients shall be thoroughly dry-mixed before adding water. After adding water, the batch shall be mixed for 3 minutes. Batches shall be of size to allow continuous placement of freshly mixed grout. Grout not used within 30 minutes after mixing shall be discarded. The space between the top of the concrete or machinery-bearing surface and the plate shall be filled solid with the grout. Forms shall be of wood or other equally suitable material for completely retaining the grout on all sides and on top and shall be removed after the grout has set. The placed grout shall be carefully worked by rodding or other means to eliminate voids; however, overworking and breakdown of the initial set shall be avoided. Grout shall not be retempered or subjected to vibration from any source. Where clearances are unusually small, placement shall be under pressure with a grout pump. Temperature of the grout, and of surfaces receiving the grout, shall be maintained at 18 to 30 degrees C until after setting.

3.12.2.2 Treatment of Exposed Surfaces

For metal-oxidizing nonshrink grout, exposed surfaces shall be cut back 25 mm and immediately covered with a parge coat of mortar consisting of 1 part portland cement and 2-1/2 parts fine aggregate by weight, with sufficient water to make a plastic mixture. The parge coat shall have a smooth finish. For other

mortars or grouts, exposed surfaces shall have a smooth-dense finish and be left untreated. Curing shall comply with paragraph CURING AND PROTECTION.

3.13 TESTING AND INSPECTION FOR CONTRACTOR QUALITY CONTROL

The Contractor shall perform the inspection and tests described below and, based upon the results of these inspections and tests, shall take the action required and shall submit specified reports. When, in the opinion of the Contracting Officer, the concreting operation is out of control, concrete placement shall cease and the operation shall be corrected. The laboratory performing the tests shall be onsite and shall conform with ASTM C 1077. Materials may be subjected to check testing by the Government from samples obtained at the manufacturer, at transfer points, or at the project site. The Government may inspect the laboratory, equipment, and test procedures prior to start of concreting operations for conformance with ASTM C 1077.

3.13.1 Grading and Corrective Action

3.13.1.1 Fine Aggregate

At least once during each shift when the concrete plant is operating, there shall be one sieve analysis and fineness modulus determination in accordance with ASTM C 136 and COE CRD-C 104 for the fine aggregate or for each fine aggregate if it is batched in more than one size or classification. The location at which samples are taken may be selected by the Contractor as the most advantageous for control. However, the Contractor is responsible for delivering fine aggregate to the mixer within specification limits. When the amount passing on any sieve is outside the specification limits, the fine aggregate shall be immediately resampled and retested. If there is another failure on any sieve, the fact shall immediately reported to the Contracting Officer, concreting shall be stopped, and immediate steps taken to correct the grading.

3.13.1.2 Coarse Aggregate

At least once during each shift in which the concrete plant is operating, there shall be a sieve analysis in accordance with ASTM C 136 for each size of coarse aggregate. The location at which samples are taken may be selected by the Contractor as the most advantageous for production control. However, the Contractor shall be responsible for delivering the aggregate to the mixer within specification limits. A test record of samples of aggregate taken at the same locations shall show the results of the current test as well as the average results of the five most recent tests including the current test. The Contractor may adopt limits for control coarser than the specification limits for samples taken other than as delivered to the mixer to allow for degradation during handling. When the amount passing any sieve is outside the specification limits, the coarse aggregate shall be immediately resampled and retested. If the second sample fails on any sieve, that fact shall be reported to the Contracting Officer. Where two consecutive averages of 5 tests are outside specification limits, the operation shall be considered out of control and shall be reported to the Contracting Officer. Concreting shall be stopped and immediate steps shall be taken to correct the grading.

3.13.2 Quality of Aggregates

Thirty days prior to the start of concrete placement, the Contractor shall perform all tests for aggregate quality required by ASTM C 33. In addition, after the start of concrete placement, the Contractor shall perform tests for aggregate quality at least every three months, and when the source of aggregate or

aggregate quality changes. Samples tested after the start of concrete placement shall be taken immediately prior to entering the concrete mixer.

3.13.3 Scales, Batching and Recording

The accuracy of the scales shall be checked by test weights prior to start of concrete operations and at least once every three months. Such tests shall also be made as directed whenever there are variations in properties of the fresh concrete that could result from batching errors. Once a week the accuracy of each batching and recording device shall be checked during a weighing operation by noting and recording the required weight, recorded weight, and the actual weight batched. At the same time, the Contractor shall test and ensure that the devices for dispensing admixtures are operating properly and accurately. When either the weighing accuracy or batching accuracy does not comply with specification requirements, the plant shall not be operated until necessary adjustments or repairs have been made. Discrepancies in recording accuracies shall be corrected immediately.

3.13.4 Batch-Plant Control

The measurement of concrete materials including cementitious materials, each size of aggregate, water, and admixtures shall be continuously controlled. The aggregate weights and amount of added water shall be adjusted as necessary to compensate for free moisture in the aggregates. The amount of air-entraining agent shall be adjusted to control air content within specified limits. A report shall be prepared indicating type and source of cement used, type and source of pozzolan or slag used, amount and source of admixtures used, aggregate source, the required aggregate and water weights per cubic meter, amount of water as free moisture in each size of aggregate, and the batch aggregate and water weights per cubic meter for each class of concrete batched during each day's plant operation.

3.13.5 Concrete Mixture

a. Air Content Testing. Air content tests shall be made when test specimens are fabricated. In addition, at least two tests for air content shall be made on randomly selected batches of each separate concrete mixture produced during each 8-hour period of concrete production. Additional tests shall be made when excessive variation in workability is reported by the placing foreman or Government inspector. Tests shall be made in accordance with ASTM C 231 for normal weight concrete and ASTM C 173 for lightweight concrete. Test results shall be plotted on control charts which shall at all times be readily available to the Government and shall be submitted weekly. Copies of the current control charts shall be kept in the field by testing crews and results plotted as tests are made. When a single test result reaches either the upper or lower action limit, a second test shall immediately be made. The results of the two tests shall be averaged and this average used as the air content of the batch to plot on both the air content and the control chart for range, and for determining need for any remedial action. The result of each test, or average as noted in the previous sentence, shall be plotted on a separate control chart for each mixture on which an "average line" is set at the midpoint of the specified air content range from paragraph Air Entrainment. An upper warning limit and a lower warning limit line shall be set 1.0 percentage point above and below the average line, respectively. An upper action limit and a lower action limit line shall be set 1.5 percentage points above and below the average line, respectively. The range between each two consecutive tests shall be plotted on a secondary control chart for range where an upper warning limit is set at 2.0 percentage points and an upper action limit is set at 3.0 percentage points. Samples for air content may be taken at the mixer, however, the Contractor is responsible for delivering the concrete to the placement site at the stipulated air content. If the Contractor's materials or transportation methods cause air content loss between the mixer

and the placement, correlation samples shall be taken at the placement site as required by the Contracting Officer, and the air content at the mixer controlled as directed.

b. Air Content Corrective Action. Whenever points on the control chart for percent air reach either warning limit, an adjustment shall immediately be made in the amount of air-entraining admixture batched. As soon as practical after each adjustment, another test shall be made to verify the result of the adjustment. Whenever a point on the secondary control chart for range reaches the warning limit, the admixture dispenser shall be recalibrated to ensure that it is operating accurately and with good reproducibility. Whenever a point on either control chart reaches an action limit line, the air content shall be considered out of control and the concreting operation shall immediately be halted until the air content is under control. Additional air content tests shall be made when concreting is restarted.

c. Slump Testing. In addition to slump tests which shall be made when test specimens are fabricated, at least four slump tests shall be made on randomly selected batches in accordance with ASTM C 143 for each separate concrete mixture produced during each 8-hour or less period of concrete production each day. Also, additional tests shall be made when excessive variation in workability is reported by the placing foreman or Government inspector. Test results shall be plotted on control charts which shall at all times be readily available to the Government and shall be submitted weekly. Copies of the current control charts shall be kept in the field by testing crews and results plotted as tests are made. When a single slump test reaches or goes beyond either the upper or lower action limit, a second test shall immediately be made. The results of the two tests shall be averaged and this average used as the slump of the batch to plot on both the control charts for slump and the chart for range, and for determining need for any remedial action. Limits shall be set on separate control charts for slump for each type of mixture. The upper warning limit shall be set at 12.5 mm below the maximum allowable slump specified in paragraph Slump in PART 1 for each type of concrete and an upper action limit line and lower action limit line shall be set at the maximum and minimum allowable slumps, respectively, as specified in the same paragraph. The range between each consecutive slump test for each type of mixture shall be plotted on a single control chart for range on which an upper action limit is set at 50 mm. Samples for slump shall be taken at the mixer. However, the Contractor is responsible for delivering the concrete to the placement site at the stipulated slump. If the Contractor's materials or transportation methods cause slump loss between the mixer and the placement, correlation samples shall be taken at the placement site as required by the Contracting Officer, and the slump at the mixer controlled as directed.

d. Slump Corrective Action. Whenever points on the control charts for slump reach the upper warning limit, an adjustment shall immediately be made in the batch weights of water and fine aggregate. The adjustments are to be made so that the total water content does not exceed that amount allowed by the maximum w/c ratio specified, based on aggregates which are in a saturated surface dry condition. When a single slump reaches the upper or lower action limit, no further concrete shall be delivered to the placing site until proper adjustments have been made. Immediately after each adjustment, another test shall be made to verify the correctness of the adjustment. Whenever two consecutive individual slump tests, made during a period when there was no adjustment of batch weights, produce a point on the control chart for range at or above the upper action limit, the concreting operation shall immediately be halted, and the Contractor shall take appropriate steps to bring the slump under control. Additional slump tests shall be made as directed.

e. Temperature. The temperature of the concrete shall be measured when compressive strength specimens are fabricated. Measurement shall be in accordance with ASTM C 1064. The temperature shall be reported along with the compressive strength data.

f. Strength Specimens. At least one set of test specimens shall be made, for compressive or flexural strength as appropriate, on each different concrete mixture placed during the day for each 250 cubic meters or portion thereof of that concrete mixture placed each day. Additional sets of test specimens shall be made, as directed by the Contracting Officer, when the mixture proportions are changed or when low strengths have been detected. A truly random (not haphazard) sampling plan shall be developed by the Contractor and approved by the Contracting Officer prior to the start of construction. The plan shall assure that sampling is done in a completely random and unbiased manner. A set of test specimens for concrete with a 28-day specified strength per paragraph Strength Requirements in PART 1 shall consist of four specimens, two to be tested at 7 days and two at 28 days. Test specimens shall be molded and cured in accordance with ASTM C 31 and tested in accordance with ASTM C 39 for test cylinders and ASTM C 78 for test beams. Results of all strength tests shall be reported immediately to the Contracting Officer. Quality control charts shall be kept for individual strength "tests", ("test" as defined in parargraph Strength Requirements in PART 1) moving average of last 3 "tests" for strength, and moving average for range for the last 3 "tests" for each mixture. The charts shall be similar to those found in ACI 214.3R.

3.13.6 Inspection Before Placing

Foundations, construction joints, forms, and embedded items shall be inspected by the Contractor in sufficient time prior to each concrete placement in order to certify to the Contracting Officer that they are ready to receive concrete. The results of each inspection shall be reported in writing.

3.13.7 Placing

The placing foreman shall supervise placing operations, shall determine that the correct quality of concrete or grout is placed in each location as specified and as directed by the Contracting Officer, and shall be responsible for measuring and recording concrete temperatures and ambient temperature hourly during placing operations, weather conditions, time of placement, volume placed, and method of placement. The placing foreman shall not permit batching and placing to begin until it has been verified that an adequate number of vibrators in working order and with competent operators are available. Placing shall not be continued if any pile of concrete is inadequately consolidated. If any batch of concrete fails to meet the temperature requirements, immediate steps shall be taken to improve temperature controls.

3.13.8 Vibrators

The frequency and amplitude of each vibrator shall be determined in accordance with COE CRD-C 521 prior to initial use and at least once a month when concrete is being placed. Additional tests shall be made as directed when a vibrator does not appear to be adequately consolidating the concrete. The frequency shall be determined while the vibrator is operating in concrete with the tachometer being held against the upper end of the vibrator head while almost submerged and just before the vibrator is withdrawn from the concrete. The amplitude shall be determined with the head vibrating in air. Two measurements shall be taken, one near the tip and another near the upper end of the vibrator head, and these results averaged. The make, model, type, and size of the vibrator and frequency and amplitude results shall be reported in writing. Any vibrator not meeting the requirements of paragraph Consolidation, shall be immediately removed from service and repaired or replaced.

3.13.9 Curing Inspection

a. Moist Curing Inspections. At least once each shift, and not less than twice per day on both work and non-work days, an inspection shall be made of all areas subject to moist curing. The surface moisture condition shall be noted and recorded.

b. Moist Curing Corrective Action. When a daily inspection report lists an area of inadequate curing, immediate corrective action shall be taken, and the required curing period for those areas shall be extended by 1 day.

c. Membrane Curing Inspection. No curing compound shall be applied until the Contractor has verified that the compound is properly mixed and ready for spraying. At the end of each operation, the Contractor shall estimate the quantity of compound used by measurement of the container and the area of concrete surface covered, shall compute the rate of coverage in square meters per Liter, and shall note whether or not coverage is uniform.

d. Membrane Curing Corrective Action. When the coverage rate of the curing compound is less than that specified or when the coverage is not uniform, the entire surface shall be sprayed again.

e. Sheet Curing Inspection. At least once each shift and once per day on non-work days, an inspection shall be made of all areas being cured using impervious sheets. The condition of the covering and the tightness of the laps and tapes shall be noted and recorded.

f. Sheet Curing Corrective Action. When a daily inspection report lists any tears, holes, or laps or joints that are not completely closed, the tears and holes shall promptly be repaired or the sheets replaced, the joints closed, and the required curing period for those areas shall be extended by 1 day.

3.13.10 Cold-Weather Protection

At least once each shift and once per day on non-work days, an inspection shall be made of all areas subject to cold-weather protection. Any deficiencies shall be noted, corrected, and reported.

3.13.11 Mixer Uniformity

a. Stationary Mixers. Prior to the start of concrete placing and once every 6 months when concrete is being placed, or once for every 60,000 cubic meters of concrete placed, whichever results in the shortest time interval, uniformity of concrete mixing shall be determined in accordance with ASTM C 94.

b. Truck Mixers. Prior to the start of concrete placing and at least once every 6 months when concrete is being placed, uniformity of concrete mixing shall be determined in accordance with ASTM C 94. The truck mixers shall be selected randomly for testing. When satisfactory performance is found in one truck mixer, the performance of mixers of substantially the same design and condition of the blades may be regarded as satisfactory.

c. Mixer Uniformity Corrective Action. When a mixer fails to meet mixer uniformity requirements, either the mixing time shall be increased, batching sequence changed, batch size reduced, or adjustments shall be made to the mixer until compliance is achieved.

3.13.12 Reports

All results of tests or inspections conducted shall be reported informally as they are completed and in writing daily. A weekly report shall be prepared for the updating of control charts covering the entire period from the start of the construction season through the current week. During periods of cold-weather protection, reports of pertinent temperatures shall be made daily. These requirements do not relieve the Contractor of the obligation to report certain failures immediately as required in preceding paragraphs. Such reports of failures and the action taken shall be confirmed in writing in the routine reports. The Contracting Officer has the right to examine all contractor quality control records.

END OF SECTION

This page intentionally blank

SECTION 03413

PRECAST ARCHITECTURAL CONCRETE

PART 1 GENERAL

1.1 REFERENCES

The publications listed below form a part of this specification to the extent referenced. The publications are referred to in the text by basic designation only.

ACI INTERNATIONAL (ACI)

ACI 211.1	(1991) Standard Practice for Selecting Proportions for Normal, Heavyweight, and Mass Concrete
ACI 211.2	(1991) Standard Practice for Selecting Proportions for Structural Lightweight Concrete
ACI 315	(1994) ACI Detailing Manual: Section Details and Detailing of Concrete Reinforcement
ACI 318/318R	(1995) Building Code Requirements for Structural Concrete and Commentary
ACI 318M	(1995) Metric Building Code Requirements for Structural Concrete and Commentary

AMERICAN SOCIETY FOR TESTING AND MATERIALS (ASTM)

ASTM A 416/416 M	(1996) Steel Strand, Uncoated Seven-Wire for Prestressed Concrete
ASTM C 494	(1992) Chemical Admixtures for Concrete
ASTM C 1017	(1992) Chemical Admixtures for Use in Producing Flowing Concrete

AMERICAN WELDING SOCIETY (AWS)

AWS D1.1	(1996) Structured Welding Code - Steel

PRECAST/PRESTRESSED CONCRETE INSTITUTE (PCI)

PCI Mnl-116S	(1985) Manual for Quality Control for Plants and Production of Precast and Prestressed Concrete Products
PCI Mnl-117	(1996) Manual for Quality Control for Plants and Production of Architectural Precast Concrete Products
PCI Mnl-122	(1989) Architectural Precast Concrete

1.2 GENERAL REQUIREMENTS

Precast concrete units shall be designed and fabricated by an experienced and acceptable precast concrete manufacturer certified under the PCI Plant Certification Program. The manufacturer shall have been regularly and continuously engaged in the manufacture of precast concrete work similar to that indicated on the drawings for at least 3 years. Precast work shall be coordinated with the work of other trades.

1.3 DESIGN

1.3.1 Standards and Loads

Precast unit design shall conform to ACI 318M ACI 318/318R and PCI Mnl-122. Design loads for precast concrete shall be as indicated on the drawings. A differential temperature of 89 degrees C (160 degrees F), between interior and exterior faces of the units, shall be considered in the design. Stresses due to restrained volume change caused by shrinkage and temperature differential, handling, transportation and erection shall be accounted for in the design.

1.3.2 Connections

Connection of units to other members, or to other units shall be of the type and configuration indicated.

1.3.3 Concrete Strength

Precast concrete units shall have a 28-day compressive strength of 34 MPa (5000 psi). Concrete mix shall include 4 to 6 percent entrained air.

1.3.4 Concrete Proportion

Selection of proportions for concrete shall be based on the methodology presented in ACI 211.1 for normal weight concrete and ACI 211.2 for lightweight concrete. The concrete proportion shall be developed using the same type and brand of cement, the same type and gradation of aggregates, and the same type and brand of admixture that will be used in the manufacture of precast concrete units for the project. Calcium chloride shall not be used in precast concrete and admixtures containing chloride ions, nitrates, or other substances that are corrosive shall not be used in prestressed concrete.

1.3.5 Calculations

Calculations for design of members and connections not shown shall be made by a professional engineer experienced in the design of precast architectural concrete. Calculation shall include the analysis of member for lifting stresses and the sizing of the lifting inserts.

1.4 SUBMITTALS

Government approval is required for submittals with a "GA" designation; submittals having an "FIO" designation are for information only. The following shall be submitted in accordance with SECTION: 01330 SUBMITTALS:

SD-01 Data

Calculations; FIO.

Design calculations, prior to the manufacture of any precast architectural concrete units for the project.

Mix Design; FIO.

A statement giving the maximum nominal coarse aggregate size, the proportions of all ingredients and the type and amount of any admixtures that will be used in the manufacture of each strength and type of concrete, prior to commencing operations. The statement shall be accompanied by test results from an approved testing laboratory, certifying that the proportions selected will produce concrete of the properties required. No substitutions shall be made without additional tests to verify that the concrete properties are satisfactory.

SD-04 Drawings

Architectural Concrete System; GA.

Detail drawings showing details in accordance with ACI 315 and ACI 318M ACI 318/318R, including installation details. Detail drawings shall indicate separate identification marks for each different precast unit, location of units in the work, elevations, fabrication details, welding details, reinforcement, connections, dimensions, interface with adjacent members, blocking points for units stored at the precast concrete plant or at the jobsite, lifting points and special handling instructions in sufficient detail to cover manufacture, handling, and erection.

SD-09 Reports

Materials; FIO.

Certified copies of test reports including all test data and all test results. Tests for compressive strength of concrete shall be performed by an approved independent commercial testing laboratory, except that compressive strength tests for initial prestress may be performed in the manufacturer's plant laboratory.

SD-14 Samples

Precast Concrete Units; GA.

Two 300 by 300 by 50 mm samples of each type of precast unit finish required for the project. Samples shall show matrix color, surface color, surface texture, and panel back finish. A full-size mock-up, maintained at the precast concrete manufacturer's plant until approval by the Contracting Officer for removal or incorporating in the project. The mock-up shall be used to establish quality and acceptance of precast units to be used on the project, and shall consist of three or more units, showing the exterior finish (matrix color, surface color, surface texture), panel back finish, edge treatment, joint treatment, reinforcement, anchorage insert, lifting inserts, and other accessories. Mockup shall also include doors and windows and typical joints, including exterior corner joints and joints between units.

SD-18 Records

Manufacturer's Qualifications; FIO.

A statement giving the qualifications of the precast concrete manufacturer and of the installers, prior to commencing operations.

1.5 STORAGE AND INSPECTION AT MANUFACTURER'S PLANT

Precast units temporarily stored at the manufacturer's plant shall be protected from damage in accordance with PCI Mnl-117 and PCI Mnl-122. Immediately prior to shipment to the jobsite, all precast concrete units shall be inspected for quality to insure all precast units conform to the requirements specified. Inspection for quality shall include, but shall not necessarily be limited to, the following elements: color, texture, dimensional tolerances, chipping, cracking, staining, warping and honeycombing. All defective precast concrete units shall be replaced or repaired as approved.

1.6 HANDLING AND STORAGE

Precast units shall be delivered to the site in accordance with delivery schedule to avoid excessive build-up of units in storage at the site. Upon delivery to the jobsite all precast units shall be inspected for quality as specified in paragraph STORAGE AND INSPECTION AT MANUFACTURER’S PLANT. If the precast units cannot be unloaded and placed directly into the work, they shall be stored onsite, off the ground and protected from weather, marring, or overload. Precast units shall be handled in accordance with manufacturer's instructions.

PART 2 PRODUCTS

2.1 MATERIALS

Except as otherwise specified, material shall conform to SECTION: 03300 CONCRETE FOR BUILDING CONSTRUCTION and SECTION: 03200 CONCRETE REINFORCEMENT.

2.1.1 Aggregates

Aggregates shall be 6 mm minus and silica sand.

2.1.2 Reinforcing Steel

Reinforcing steel shall be galvanized if clearance to an exterior face is 25 mm or less.

2.1.3 Prestressing Strands

Prestressing strands shall conform to ASTM A 416/A 416M.

2.1.4 Tie Wire

Tie wire shall be soft monel or 18-8 stainless steel.

2.1.5 Inserts

Inserts shall be manufacturer's standard, suited for the application.

2.1.6 Plates, Angles, Anchors and Embedments

Material shall be as specified in PCI Mnl-117. Steel items, other than stainless, shall be coated with a rust-inhibiting paint or shall be hot-dip galvanized. Steel items, including items embedded in concrete, shall be either stainless steel or hot dip galvanized steel.

2.1.7 Form Release Agent

Release agent shall be manufacturer's standard nonstaining type.

2.1.8 Admixtures

Admixtures shall conform to ASTM C 494. Plasticizing admixture, if used, shall conform to ASTM C 1017.

2.1.9 Color

Color shall be in accordance with the color schedule as indicated on the plans.

2.2 PRECAST CONCRETE UNITS

Precast concrete units shall be manufactured and cured in accordance with the applicable provisions of PCI Mnl-117. Units shall be manufactured within the allowable tolerances given in PCI Mnl-117 and PCI Mnl-122.

2.2.1 Formwork

Forms shall be steel of adequate thickness, braced, stiffened, anchored and aligned to produce precast architectural concrete units within required dimensional tolerances. Forms shall be sufficiently rigid to provide dimensional stability during handling and concrete placement and consolidation. Fiberglass-reinforced plastic, plastic coated wood, elastomeric or other nonabsorptive material shall be used for making tight joints and rustication pieces.

2.2.2 Reinforcement

Fabrication and placement of reinforcement shall conform to the details shown on the approved detail drawings and PCI Mnl-116S and PCI Mnl-117.

2.2.3 Embedded Accessories

Anchors, inserts, lifting devices, and other accessories which are to be embedded in the precast units shall be furnished and installed in accordance with the approved detail drawings. Embedded items shall be accurately positioned in their designed location, and shall have sufficient anchorage and embedment to satisfy design requirements.

2.2.4 Stripping

Precast concrete units shall not be removed from forms until units develop sufficient strength to safely strip the formwork and to remove the precast concrete units from the forms to prevent damage to the units from overstress or chipping.

2.2.5 Identification

Each precast concrete unit shall be marked to correspond to the identification marks for each different precast unit shown on the detail drawings.

2.2.6 Finishes

2.2.6.1 Exposed Surfaces

Surfaces of precast units exposed to view or surfaces indicated to be finished shall be finished as follows: Utilize three-step finishing process: acid etch surface, sack rub in all exposed voids with grout matching to approved concrete color, then re-etch the surface to yield a fine texture with no voids or coarse aggregate exposed.

2.2.6.2 Other Surfaces

Surfaces of precast units not exposed to view or not otherwise indicated to be finished shall be finished in accordance with SECTION: 03300 CONCRETE FOR BUILDING CONSTRUCTION.

PART 3 EXECUTION

3.1 ERECTION

Precast units shall be erected in accordance with the detail drawings and without damage to other units or to adjacent members. Coordinate installation/erection with SECTION: 04220, NONBEARING MASONRY VENEER/STEEL STUD WALLS. Units shall be set true to alignment and level, with joints properly spaced and aligned both vertically and horizontally. Erection tolerances shall be in accordance with the requirements of PCI Mnl-117 and PCI Mnl-122. As units are being erected, shims and wedges shall be placed as required to maintain correct alignment. After final attachment, precast units shall be grouted as shown. After erection, welds and abraded surfaces of steel shall be cleaned and touched-up with a zinc-rich paint. Welds shall be made by a certified welder in accordance with the manufacturer's erection drawings. Pickup points, boxouts, inserts, and similar items shall be finished to match adjacent areas after erection. Erection of precast units shall be supervised and performed by workmen skilled in this type of work. Welding and the qualifications of welders shall be in accordance with AWS D1.1.

3.2 JOINT SEALING

Joint sealing shall be as specified in Section 07900 JOINT SEALING.

3.3 CLEANING

Not sooner than 72 hours after joints are sealed, faces and other exposed surfaces of precast concrete discolored during erection shall be cleaned to remove dirt and stains by dry scrubbing with a stiff fiber

brush, wetting the surface and vigorous scrubbing of the finish with a stiff fiber brush followed by additional washing, or by chemical cleaning compounds such as detergents or other commercial cleaners. Commercial cleaners shall be used in accordance with the manufacturer's recommendations. Cleaning procedure shall be performed on a designated test area and shall be approved prior to proceeding with cleaning work. Discolorations which cannot be removed by these procedures, will be considered defective work. Cleaning work shall be done when temperature and humidity permit surfaces to dry rapidly. Adjacent surfaces shall not be damaged during cleaning operations. Reference cleaning proceedures under SECTION: 04220, NONBEARING MASONRY VENEER /STEEL STUD WALLS.

3.4 PROTECTION OF WORK

Precast units shall be protected against damage from subsequent operations.

3.5 DEFECTIVE WORK

Precast concrete units damaged during erection shall be repaired as soon after occurrence as possible or replaced, as directed, using approved procedures. All repairs to precast concrete units shall match the adjacent surfaces in color and texture and shall be as approved. Unless otherwise approved, repair procedures shall conform to PCI Mnl-117.

END OF SECTION

This page intentionally blank

SECTION 04200

MASONRY

PART 1 GENERAL

1.1 REFERENCES

The publications listed below form a part of this specification to the extent referenced. The publications are referred to in the text by basic designation only.

AMERICAN SOCIETY FOR TESTING AND MATERIALS (ASTM)

ASTM A 82	(1995a) Steel Wire, Plain, for Concrete Reinforcement
ASTM A 153	(1996) Zinc Coating (Hot-Dip) on Iron and Steel Hardware
ASTM A 615/A 615M	(1996a) Deformed and Plain Billet-Steel Bars for Concrete Reinforcement
ASTM C 90	(1996a) Load bearing Concrete Masonry Units
ASTM C 91	(1996) Masonry Cement
ASTM C 270	(1997) Mortar for Unit Masonry
ASTM C 494	(1992) Chemical Admixtures for Concrete
ASTM C 641	(1982; R 1991) Staining Materials in Lightweight Concrete Aggregates
ASTM C 780	(1996) Preconstruction and Construction Evaluation of Mortars for Plain and Reinforced Unit Masonry
ASTM C 1072	(1994) Measurement of Masonry Flexural Bond Strength

1.2 SUBMITTALS

Government approval is required for submittals with a "GA" designation; submittals having an "FIO" designation are for information only. The following shall be submitted in accordance with Section 01330 SUBMITTAL PROCEDURES:

SD-01 Data

Concrete Masonry Units (CMU); GA.

Manufacturer's descriptive data.

SD-04 Drawings

Masonry Work; FIO.

Drawings including plans, elevations, and details of wall reinforcement; details of reinforcing bars at corners and wall intersections; offsets; tops, bottoms, and ends of walls; control and expansion joints; and wall openings. Bar splice locations shall be shown. If the Contractor opts to furnish inch-pound CMU products, drawings showing elevation of walls exposed to view and indicating the location of all cut CMU products shall be submitted for approval. Bent bars shall be identified on a bending diagram and shall be referenced and located on the drawings. Wall dimensions, bar clearances, and wall openings greater than one masonry unit in area shall be shown. No approval will be given to the shop drawings until the Contractor certifies that all openings, including those for mechanical and electrical service, are shown. If, during construction, additional masonry openings are required, the approved shop drawings shall be resubmitted with the additional openings shown along with the proposed changes. Location of these additional openings shall be clearly highlighted. The minimum scale for wall elevations shall be 1 to 50 (1/4 inch per foot). Reinforcement bending details shall conform to the requirements of ACI SP-66.

SD-08 Statements

Cold Weather Installation; GA.

Cold weather construction procedures.

SD-09 Reports

Efflorescence Test; FIO. Field Testing of Mortar; FIO. Field Testing of Grout; FIO. Masonry Cement; FIO.

Test reports from an approved independent laboratory. Test reports on a previously tested material shall be certified as the same as that proposed for use in this project.

SD-13 Certificates

Concrete Masonry Units (CMU); FIO. Control Joint Keys; FIO. Anchors, Ties, and Bar Positioners; FIO. Joint Reinforcement; FIO. Reinforcing Steel Bars and Rods; FIO.

Masonry Cement; FIO. Mortar Coloring; FIO. Precast Concrete Items; FIO. Mortar Admixtures; FIO.

Certificates of compliance stating that the materials meet the specified requirements.

SD-14 Samples

Concrete Masonry Units (CMU); GA

Color samples of three stretcher units and one unit for each type of special shape. Units shall show the full range of color and texture.

Anchors, Ties, and Bar Positioners; FIO.

Two of each type used.

Joint Reinforcement; FIO.

One piece of each type used, including corner and wall intersection pieces, showing at least two cross wires.

1.3 SAMPLE MASONRY PANELS

After material samples are approved and prior to starting masonry work, sample masonry panels shall be constructed for each type and color of masonry required. At least 48 hours prior to constructing the sample panel or panels, the Contractor shall submit written notification to the Contracting Officer's Representative. Sample panels shall not be built in, or as part of the structure, but shall be located where directed.

1.3.1 Configuration

Panels shall be L-shaped or otherwise configured to represent all of the wall elements. Panels shall be of the size necessary to demonstrate the acceptable level of workmanship for each type of masonry represented on the project. The minimum size of a straight panel or a leg of an L-shaped panel shall be 2.5 m (8 feet) long by 1.2 m. (4 feet) high.

1.3.2 Usage

The completed panels shall be used as the standard of workmanship for the type of masonry represented. Masonry work shall not commence until the sample panel for that type of masonry construction has been completed and approved. Panel shall be protected from the weather and construction operations until the masonry work has been completed and approved. After completion of the work, the sample panels, including all foundation concrete, shall become the property of the Contractor and shall be removed from the construction site.

1.4 DELIVERY, HANDLING, AND STORAGE

Materials shall be delivered, handled, stored, and protected to avoid chipping, breakage, and contact with soil or contaminating material.

1.4.1 Concrete Masonry Units (CMU)

Concrete masonry units shall be covered or protected from inclement weather and shall conform to the moisture content as specified in ASTM C 90when delivered to the job site. Prefabricated lintels shall be marked on top sides to show either the lintel schedule number or the number and size of top and bottom bars.

1.4.2 Reinforcement, Anchors, and Ties

Steel reinforcing bars, coated anchors, ties, and joint reinforcement shall be stored above the ground. Steel reinforcing bars and un coated ties shall be free of loose mill scale and rust.

1.4.3 Cementitious Materials, Sand and Aggregates

Cementitious and other packaged materials shall be delivered in unopened containers, plainly marked and labeled with manufacturers' names and brands. Cementitious material shall be stored in dry, weather tight enclosures or be completely covered. Cement shall be handled in a manner that will prevent the inclusion of foreign materials and damage by water or dampness. Sand and aggregates shall be stored in a manner to prevent contamination or segregation.

1.5 SPECIAL INSPECTION

A qualified masonry inspector approved by the Contracting Officer shall perform inspection of the masonry work. Minimum qualifications for the masonry inspector shall be 5 years of reinforced masonry inspection experience or acceptance by a State, municipality, or other governmental body having a program of examining and certifying inspectors for reinforced masonry construction. The masonry inspector shall be present during preparation of masonry sampling and placing of masonry units, placement of reinforcement (including placement of dowels in footings and foundation walls). The masonry inspector shall assure Contractor compliance with the drawings and specifications. The masonry inspector shall keep a complete record of all inspections and shall submit daily written reports to the Quality Control Supervisory Representative reporting the quality of masonry construction.

PART 2 PRODUCTS

2.1 GENERAL REQUIREMENTS

The source of materials which will affect the appearance of the finished work shall not be changed after the work has started except with Contracting Officer's approval. The Contractor has the option to use either hard metric or substitute inch-pound (soft-metric) CMU products. If the Contractor decides to substitute inch-pound CMU products, the following additional requirements shall be met:

a. The metric dimensions indicated on the drawings shall not be altered to accommodate inch-pound CMU products either horizontally or vertically. The 100 mm building module shall be maintained, except for the CMU products themselves.

b. Mortar joint widths shall be maintained as specified.

c. Rebars shall not be cut, bent or eliminated to fit into the inch-pound CMU products module.

d. Inch-pound CMU products shall not be reduced in size by more than one-third (1/3) in height and one-half (1/2) in length. Cut CMU products shall not be located at ends of walls, corners, and other openings.

e. Cut, exposed CMU products shall be held to a minimum and located where they would have the least impact on the architectural aesthetic goals of the facility.

f. Other building components, built into the CMU products, such as window frames, door frames, louvers, grilles, fire dampers, etc., that are required to be metric, shall remain metric.

g. Additional metric guidance shall conform to Section 01415 METRIC MEASUREMENTS.

2.2 CONCRETE MASONRY UNITS (CMU)

Hollow and solid concrete masonry units shall conform to ASTM C 90, Type I. Cement shall have a low alkali content and be of one brand. Exposed interior concrete masonry units shall be lightly sand blasted after installation.

2.2.1 Aggregates

Lightweight aggregates and blends of lightweight and heavier aggregates in proportions used in producing the units, shall comply with the following requirements when tested for stain-producing iron compounds in accordance with ASTM C 641: by visual classification

method, the iron stain deposited on the filter paper shall not exceed the "light stain" classification.

2.2.2 Acoustical Units

Acoustical concrete masonry units shall be sound absorbing, having funnel shaped vertical slots in front of cavities and separate open cavities for reinforcing steel . Units shall be factory finished with sound absorbing material in cavities.

2.3 NOT USED ~~PRECAST CONCRETE ITEMS~~

~~Where shown on the drawings, shall be factory-made units from a plant regularly engaged in producing precast concrete units. Unless otherwise indicated, concrete shall be 28 MPa (4000 psi) minimum conforming to Section 03300 CAST-IN-PLACE STRUCTURAL CONCRETE using 13 mm (1/2 inch) to No. 4 nominal-size coarse aggregate, and minimum reinforcement shall be the reinforcement required for handling of the units. Clearance of 20 mm (3/4 inch) shall be maintained between reinforcement and faces of units. Unless precast-concrete items have been subjected during manufacture to saturated-steam pressure of at least 827 kPa (120 psi) for at least 5 hours, the items, after casting, shall be either damp-cured for 24 hours or steam-cured and shall then be aged under cover for 28 days or longer. Cast-concrete members weighing over 35 kg 80 pounds shall have built-in loops of galvanized wire or other approved provisions for lifting and anchoring. Units shall have beds and joints at right angles to the face, with sharp true arises and shall be cast with drip grooves on the underside where units overhang walls. Exposed-to-view surfaces shall be free of surface voids, spalls, cracks, and chipped or broken edges. Precast units exposed-to-view shall be of uniform appearance and color. Unless otherwise specified, units shall have a smooth dense finish. Prior to use, each item shall be wetted and inspected for crazing. Items showing evidence of dusting, spalling, crazing, or having surfaces treated with a protective coating will be rejected.~~

~~2.3.1 Headers and Sills~~

~~Headers and sills shall be cast with washes. The ends of sills, except a 20 mm (3/4 inch) wide margin at exposed surfaces, shall be roughened for bond.~~

2.4 MORTAR

Mortar shall be Type N in accordance with the proportion specification of ASTM C 270. Type N cement-lime mortar proportions shall be 1 part cement, 1 part lime and 6 parts aggregate; when masonry cement ASTM C 91 is used the maximum air content shall be limited to 12 percent and performance equal to cement-lime mortar shall be verified. Verification of masonry cement performance shall be based on ASTM C 780 and ASTM C 1072. Cement shall have a low alkali content and be of one brand. Aggregates shall be from one source.

In cold weather, a non-chloride based accelerating admixture may be used subject to approval. Accelerating admixture shall be non-corrosive, shall contain less than 0.2 percent chlorides, and shall conform to ASTM C 494, Type C.

2.4.1 Coloring

Mortar coloring shall be added to the mortar used for exposed masonry surfaces to produce a uniform color. Mortar coloring shall not exceed 3 percent of the weight of cement for carbon black and ten percent of the weight of cement for all other pigments. Mortar coloring shall be chemically inert, of finely ground lime proof pigment, and furnished in accurately pre-measured and packaged units that can be added to a measured amount of cement.

2.5 ANCHORS, TIES, AND BAR POSITIONERS

Anchors and ties shall be fabricated without drips or crimps and shall be zinc-coated in accordance with ASTM A 153, Class B-2. Steel wire used for anchors and ties shall be fabricated from steel wire conforming to ASTM A 82. Anchors and ties shall be sized to provide a minimum of 16 mm (5/8 inch) mortar cover from either face.

2.5.1 Wire Mesh Ties

Wire mesh for tying 100 mm (4 inch) thick concrete masonry unit partitions to other intersecting masonry partitions shall be 13 mm (1/2 inch) mesh of minimum 16 gauge steel wire. Minimum lengths shall be not less than 300 mm (12 inches).

2.5.2 Bar Positioners

Bar positioners, used to prevent displacement of reinforcing bars during the course of construction, shall be factory fabricated from 9 gauge steel wire or equivalent, and coated with a hot-dip galvanized finish. Not more than one wire shall cross the cell.

2.6 JOINT REINFORCEMENT

Joint reinforcement shall be factory fabricated from steel wire conforming to ASTM A 82, welded construction. Tack welding will not be acceptable in reinforcement used for wall ties. Wire shall have zinc coating conforming to ASTM A 153, Class B-2. All wires shall be a minimum of 9 gauge. Reinforcement shall be ladder type design, having one longitudinal wire in the mortar bed of each face shell for hollow units and one wire for solid units. Joint reinforcement shall be placed a minimum of 16 mm (5/8 inch) cover from either face. The distance between cross wires shall not exceed 400 mm (16 inches). Joint reinforcement for straight runs shall be furnished in flat sections not less than 3 m (10 feet) long. Joint reinforcement shall be provided with factory formed corners and intersections. If approved for use, joint reinforcement may be furnished with adjustable wall tie features.

2.7 REINFORCING STEEL BARS AND RODS

Reinforcing steel bars and rods shall conform to ASTM A 615/A 615M, Grade 60.

PART 3 EXECUTION

3.1 ENVIRONMENTAL REQUIREMENTS

3.1.1 Hot Weather Installation

The following precautions shall be taken if masonry is erected when the ambient air temperature is more than 37 degrees C (99 degrees F) in the shade and the relative humidity is less than 50 percent. All masonry materials shall be shaded from direct sunlight; mortar beds shall be spread no more than 1.2 m (4 feet) ahead of masonry; masonry units shall be set within one minute of spreading mortar; and after erection, masonry shall be protected from direct exposure to wind and sun for 48 hours.

3.1.2 Cold Weather Installation

Before erecting masonry when ambient temperature or mean daily air temperature falls below 4 degrees C (40 degrees F), a written statement of proposed cold weather construction procedures shall be submitted for approval. The following precautions shall be taken during all cold weather erection.

3.1.2.1 Preparation

Ice or snow formed on the masonry bed shall be thawed by the application of heat. Heat shall be applied carefully until the top surface of the masonry is dry to the touch. Sections of masonry deemed frozen and damaged shall be removed before continuing construction of those sections.

a. Air Temperature 4 to 0 degrees C (40 to 32 Degrees F). Sand or mixing water shall be heated to produce mortar temperatures between 4 degrees C and 49 degrees C (40 degrees F and 120 degrees F).

b. Air Temperature 0 to minus 4 degrees C (32 to 25 Degrees F). Sand and mixing water shall be heated to produce mortar temperatures between 4 degrees C and 49 degrees C (40 degrees F and 120 degrees F). Temperature of mortar on boards shall be maintained above freezing.

c. Air Temperature minus 4 to minus 7 degrees C (25 to 20 Degrees F). Sand and mixing water shall be heated to provide mortar temperatures between 4 degrees C and 49 degrees C (40 degrees F and 120 degrees F). Temperature of mortar on boards shall be maintained above freezing. Sources of heat shall be used on both sides of walls under

construction. Windbreaks shall be employed when wind is in excess of 24 km/hour. 15 mph.

d. Air Temperature minus 7 degrees C (20 Degrees F) and below. Sand and mixing water shall be heated to provide mortar temperatures between 4 degrees C and 49 degrees C (40 degrees F and 120 degrees F). Enclosure and auxiliary heat shall be provided to maintain air temperature above 0 degrees C (32 degrees F). Temperature of units when laid shall not be less than minus 7 degrees C (20 degrees F).

3.1.2.2 Completed Masonry and Masonry Not Being Worked On

a. Mean daily air temperature 4 degrees C to 0 degrees C (40 degrees F to 32 degrees F). Masonry shall be protected from rain or snow for 24 hours by covering with weather-resistive membrane.

b. Mean daily air temperature 0 degrees C to minus 4 degrees C (32 degrees F to 25 degrees F). Masonry shall be completely covered with weather-resistant membrane for 24 hours.

c. Mean Daily Air Temperature minus 4 degrees C to minus 7 degrees C (25 Degrees F to 20 Degrees F). Masonry shall be completely covered with insulating blankets or equally protected for 24 hours.

d. Mean Daily Temperature minus 7 degrees C (20 Degrees F) and Below. Masonry temperature shall be maintained above 0 degrees C (32 degrees F) for 24 hours by enclosure and supplementary heat, by electric heating blankets, infrared heat lamps, or other approved methods.

3.2 LAYING MASONRY UNITS

Masonry units shall be laid in running bond pattern. Each unit shall be adjusted to its final position while mortar is still soft and plastic. Units that have been disturbed after the mortar has stiffened shall be removed, cleaned, and re laid with fresh mortar. Vertical joints shall be kept plumb. Units being laid and surfaces to receive units shall be free of water film and frost. Units shall be shoved into place so that the vertical joints are tight. Vertical joints of face shells of concrete masonry units, except where indicated, shall be completely filled with mortar. Mortar will be permitted to protrude up to 13 mm (1/2 inch) into the cells to be grouted. Means shall be provided to prevent mortar from dropping into the space below.

3.2.1 Surface Preparation

Surfaces upon which masonry is placed shall be cleaned of laitance, dust, dirt, oil, organic matter, or other foreign materials and shall be slightly roughened to provide a surface

texture with a depth of at least 3 mm (1/8 inch). Sandblasting shall be used, if necessary, to remove laitance from pores and to expose the aggregate. Do not paint masonry units.

3.2.2 Concrete Masonry Units

Units in piers, pilasters, columns, starting courses on footings and where cells are to be filled with grout shall be full bedded in mortar under both face shells and webs. Other units shall be full bedded under both face shells. Head joints shall be filled solidly with mortar for a distance in from the face of the unit not less than the thickness of the face shell. Jamb units shall be of the shapes and sizes to conform with wall units. Solid units may be incorporated in the masonry work where necessary to fill out at corners, gable slopes, and elsewhere as approved. Walls and partitions shall be adequately reinforced for support of wall-hung plumbing fixtures when chair carriers are not specified.

3.2.3 Tolerances

Masonry shall be laid plumb, true to line, with courses level. Bond pattern shall be kept plumb throughout. Corners shall be square unless noted otherwise. Masonry shall be laid within the following tolerances (plus or minus unless otherwise noted):

TABLE II

TOLERANCES
IN METRIC UNITS

Variation from the plumb in the lines and surfaces of columns, walls and arises	
In adjacent masonry units	3 mm
In 3 m	6 mm
In 6 m	10 mm
In 12 m or more	13 mm

Variations from the plumb for external corners and other conspicuous lines	
In 6 m	6 mm
In 12 m or more	13 mm

Variations from the level for exposed headers, sills, horizontal bands, and other conspicuous lines

In 3 m	6 mm
In 6 m	10 mm
In 12 m or more	13 mm

Variations in cross sectional dimensions of columns and in thickness of walls

Minus	6 mm
Plus	13 mm

TABLE II

TOLERANCES
IN ENGLISH UNITS

Variation from the plumb in the lines and surfaces of columns, walls and arises

In adjacent masonry units	1/8 inch
In 10 feet	1/4 inch
In 20 feet	3/8 inch
In 40 feet or more	1/2 inch

Variations from the plumb for external corners, expansion joints, and other conspicuous lines

In 20 feet	1/4 inch
In 40 feet or more	1/2 inch

Variations from the level for exposed headers, sills, horizontal bands and other conspicuous lines

In 10 feet	1/4 inch
In 20 feet	3/8 inch
In 40 feet or more	1/2 inch

Variations in cross sectional dimensions of columns and in thickness of walls

Minus	1/4 inch
Plus	1/2 inch

3.2.4 Cutting and Fitting

Full units of the proper size shall be used wherever possible, in lieu of cut units. Cutting and fitting, including that required to accommodate the work of others, shall be done by masonry mechanics using power masonry saws. Concrete masonry units may be wet or dry cut. Wet cut units, before being placed in the work, shall be dried to the same surface-dry appearance as uncut units being laid in the wall. Cut edges shall be clean, true and sharp. Openings in the masonry shall be made carefully so that wall plates, cover plates or escutcheons required by the installation will completely conceal the openings and will have bottoms parallel with the masonry bed joints. Reinforced masonry lintels shall be provided above openings over 300 mm (12 inches) wide for pipes, ducts, cable trays, and other wall penetrations, unless steel sleeves are used.

3.2.5 Jointing

Joints shall be tooled when the mortar is thumbprint hard. Horizontal joints shall be tooled last. Joints shall be brushed to remove all loose and excess mortar. Mortar joints shall be finished as follows:

3.2.5.1 Tooled Joints

Joints in exposed exterior and interior masonry surfaces shall be tooled slightly concave. Joints shall be tooled with a jointer slightly larger than the joint width so that complete contact is made along the edges of the unit. Tooling shall be performed so that the mortar is compressed and the joint surface is sealed. Jointer of sufficient length shall be used to obtain a straight and true mortar joint.

3.2.5.2 Door and Window Frame Joints

On the exposed interior side of exterior frames, joints between frames and abutting masonry walls shall be raked to a depth of 10 mm (3/8 inch). On the exterior side of exterior frames, joints between frames and abutting masonry walls shall be raked to a depth of 10 mm. 3/8 inch.

3.2.5.3 Joint Widths

Concrete masonry units shall have 10 mm (3/8 inch) joints.

3.2.5.4 Masonry Wall Intersections

Each course shall be masonry bonded at corners and elsewhere as shown. Masonry walls shall be anchored or tied together at corners and intersections with bond beam

3.3 WEEP HOLES

Weep holes shall be provided not more than 600 mm (24 inches) on centers in mortar joints of the exterior perimeter wall above foundations. Weep holes shall be formed by placing short lengths of well-greased No. 10, 8 mm (5/16 inch) nominal diameter, braided cotton sash cord in the mortar and withdrawing the cords after the wall has been completed. Other approved methods may be used for providing weep holes. Weep holes shall be kept free of mortar and other obstructions.

3.4 MORTAR

Mortar shall be mixed in a mechanically operated mortar mixer for at least 3 minutes, but not more than 5 minutes. Measurement of ingredients for mortar shall be by volume. Ingredients not in containers, such as sand, shall be accurately measured by the use of measuring boxes. Water shall be mixed with the dry ingredients in sufficient amount to provide a workable mixture which will adhere to the vertical surfaces of masonry units. Mortar that has stiffened because of loss of water through evaporation shall be re tempered by adding water to restore the proper consistency and workability. Mortar that has reached its initial set or that has not been used within 2-1/2 hours after mixing shall be discarded.

3.5 REINFORCING STEEL

Reinforcement shall be cleaned of loose, flaky rust, scale, grease, mortar, grout, or other coating which might destroy or reduce its bond prior to placing grout. Bars with kinks or bends not shown on the drawings shall not be used. Reinforcement shall be placed prior to grouting. Unless otherwise indicated, vertical wall reinforcement shall extend to within 50 mm 2 inches of tops of walls.

3.5.1 Positioning Bars

Vertical bars shall be accurately placed within the cells at the positions indicated on the drawings. A minimum clearance of 13 mm (1/2 inch) shall be maintained between the bars and masonry units. Minimum clearance between parallel bars shall be one diameter of the reinforcement. Vertical reinforcing may be held in place using bar positioners located near the ends of each bar and at intermediate intervals of not more than 192 diameters of the reinforcement. Column and pilaster ties shall be wired in position around the vertical steel. Ties shall be in contact with the vertical reinforcement and shall not be placed in horizontal bed joints.

3.5.2 Splices

Bars shall be lapped a minimum of 48 diameters of the reinforcement. Welded or mechanical connections shall develop at least 125 percent of the specified yield strength of the reinforcement.

3.6 JOINT REINFORCEMENT

Joint reinforcement shall be installed at 400 mm (16 inches) on center or as indicated. Reinforcement shall be lapped not less than 150 mm (6 inches). Prefabricated sections shall be installed at corners and wall intersections. The longitudinal wires of joint reinforcement shall be placed to provide not less than 16 mm (5/8 inch) cover to either face of the unit.

3.7 PLACING GROUT

Cells containing reinforcing bars shall be filled with grout. Hollow masonry units in walls or partitions supporting plumbing, heating, or other mechanical fixtures, voids at door and window jambs, and other indicated spaces shall be filled solid with grout. Grout not in place within 1-1/2 hours after water is first added to the batch shall be discarded. Sufficient time shall be allowed between grout lifts to preclude displacement or cracking of face shells of masonry units. If blowouts, flowouts, misalignment, or cracking of face shells should occur during construction, the wall shall be torn down and rebuilt.

3.7.1 Grout Placement

Masonry shall be laid to the top of a pour before placing grout. Grout shall not be placed in hollow unit masonry until mortar joints have set for at least 24 hours. Grout shall be placed using a hand bucket, concrete hopper, or grout pump to completely fill the grout spaces without segregation of the aggregates. Vibrators shall not be inserted into lower pours that are in a semi-solidified state. The height of grout pours and type of grout used shall be limited by the dimensions of grout spaces as indicated in Table III. Low-lift grout methods may be used on pours up to and including 1.5 m (5 feet) in height. High-lift grout methods shall be used on pours exceeding 1.5 m (5 feet) in height.

3.7.1.1 Low-Lift Method

Grout shall be placed at a rate that will not cause displacement of the masonry due to hydrostatic pressure of the grout. Mortar protruding more than 13 mm (1/2 inch) into the grout space shall be removed before beginning the grouting operation. Grout pours 300 mm (12 inches) or less in height shall be consolidated by mechanical vibration or by puddling. Grout pours over 300 mm (12 inches) in height shall be consolidated by mechanical vibration and reconsolidated by mechanical vibration after initial water loss and

settlement has occurred. Vibrators shall not be inserted into lower pours that are in a semi-solidified state. Low-lift grout shall be used subject to the limitations of Table III.

3.7.1.2 High-Lift Method

Mortar droppings shall be cleaned from the bottom of the grout space and from reinforcing steel. Mortar protruding more than 6 mm (1/4 inch) into the grout space shall be removed by dislodging the projections with a rod or stick as the work progresses. Reinforcing, bolts, and embedded connections shall be rigidly held in position before grouting is started. CMU units shall not be pre-wetted. Grout, from the mixer to the point of deposit in the grout space shall be placed as rapidly as practical by pumping and placing methods which will prevent segregation of the mix and cause a minimum of grout splatter on reinforcing and masonry surfaces not being immediately encased in the grout lift. The individual lifts of grout shall be limited to 1.2 m (4 feet) in height. The first lift of grout shall be placed to a uniform height within the pour section and vibrated thoroughly to fill all voids. This first vibration shall follow immediately behind the pouring of the grout using an approved mechanical vibrator. After a waiting period sufficient to permit the grout to become plastic, but before it has taken any set, the succeeding lift shall be poured and vibrated 300 to 450 mm (12 to 18 inches) into the preceding lift. If the placing of the succeeding lift is going to be delayed beyond the period of workability of the preceding, each lift shall be re consolidated by reworking with a second vibrator as soon as the grout has taken its settlement shrinkage. The waiting, pouring, and re consolidation steps shall be repeated until the top of the pour is reached. The top lift shall be re consolidated after the required waiting period. The high-lift grouting of any section of wall between vertical grout barriers shall be completed to the top of a pour in one working day unless a new series of cleanout holes is established and the resulting horizontal construction joint cleaned. High-lift grout shall be used subject to the limitations in Table III.

TABLE III

POUR HEIGHT AND TYPE OF GROUT FOR VARIOUS GROUT SPACE DIMENSIONS

Maximum Grout Pour Height (m)	Grout Type	Grouting Procedure	Minimum Dimensions of the Total Clear Areas Within Grout Spaces and Cells (mm) (1, 2) Hollow-unit Masonry
0.3	Fine	Low Lift	40 x 50
1.5	Fine	Low Lift	50 x 75
2.4	Fine	High Lift	50 x 75

3.6	Fine	High Lift	65 x 75
7.3	Fine	High Lift	75 x 75
0.3	Coarse	Low Lift	40 x 75
1.5	Coarse	Low Lift	65 x 75
2.4	Coarse	High Lift	75 x 75
3.6	Coarse	High Lift	75 x 75
7.3	Coarse	High Lift	75 x 100

TABLE III

POUR HEIGHT AND TYPE OF GROUT FOR VARIOUS GROUT SPACE DIMENSIONS

Maximum Grout Pour Height (feet) (3)	Grout Type	Grouting Procedure	Minimum Dimensions of the Total Clear Areas Within Grout Spaces and Cells (in.) (1, 2) Hollow-unit Masonry
1	Fine	Low Lift	1-1/2 x 2
5	Fine	Low Lift	2 x 3
8	Fine	High Lift	2 x 3
12	Fine	High Lift	2-1/2 x 3
24	Fine	High Lift	3 x 3
1	Coarse	Low Lift	1-1/2 x 3
5	Coarse	Low Lift	2-1/2 x 3
8	Coarse	High Lift	3 x 3
12	Coarse	High Lift	3 x 3
24	Coarse	High Lift	3 x 4

Notes:
(1) The actual grout space or cell dimension must be larger than the sum of the following items:
a) The required minimum dimensions of total clear areas given in the table above;
b) The width of any mortar projections within the space;
c) The horizontal projections of the diameters of the horizontal reinforcing bars within a cross section of the grout space or cell.

(2) The minimum dimensions of the total clear areas shall be made up of one or more open areas, with at least one area being 20 mm 3/4 inchor greater in width.

(3) Where only cells of hollow masonry units containing reinforcement are grouted, the maximum height of the pour shall not exceed the distance between horizontal bond beams.

3.8 BOND BEAMS

Bond beams shall be filled with grout and reinforced as indicated on the drawings. Grout barriers shall be installed under bond beam units to retain the grout as required. Reinforcement shall be continuous, including around corners, except through control joints or expansion joints, unless otherwise indicated on the drawings. Where splices are required for continuity, reinforcement shall be lapped 48 bar diameters. A minimum clearance of 13 mm (1/2 inch) shall be maintained between reinforcement and interior faces of units.

3.9 HEADERS AND SILLS

Headers and sills shall be set in a full bed of mortar with faces plumb and true.

3.10 POINTING AND CLEANING

After mortar joints have attained their initial set, but prior to hardening, mortar and grout daubs or splashings shall be completely removed from masonry-unit surfaces that will be exposed or painted. Before completion of the work, defects in joints of masonry to be exposed or painted shall be raked out as necessary, filled with mortar, and tooled to match existing joints. Immediately after grout work is completed, scum and stains which have percolated through the masonry work shall be removed using a high pressure stream of water and a stiff bristled brush. Masonry surfaces shall not be cleaned, other than removing excess surface mortar, until mortar in joints has hardened. Masonry surfaces shall be left clean, free of mortar daubs, dirt, stain, and discoloration, including scum from cleaning operations, and with tight mortar joints throughout. Metal tools and metal brushes shall not be used for cleaning.

3.10.1 Concrete Masonry Unit

Exposed concrete masonry unit surfaces shall be dry-brushed at the end of each day's work and after any required pointing, using stiff-fiber bristled brushes.

3.11 PROTECTION

Facing materials shall be protected against staining. Top of walls shall be covered with nonstaining waterproof covering or membrane when work is not in progress. Covering of the top of the unfinished walls shall continue until the wall is waterproofed with a complete roof or parapet system. Covering shall extend a minimum of 600 mm (2 feet) down on each side of the wall and shall be held securely in place. Before starting or resuming, top surface of masonry in place shall be cleaned of loose mortar and foreign material.

3.12 TEST REPORTS

Field Testing of Mortar

At least three specimens of mortar shall be taken each day. A layer of mortar 13 to 16 mm (1/2 to 5/8 inch) thick shall be spread on the masonry units and allowed to stand for one minute. The specimens shall then be prepared and tested for compressive strength in accordance with ASTM C 780.

END OF SECTION

SECTION 04220

NONBEARING MASONRY VENEER/STEEL STUD WALLS

PART 1 GENERAL

1.1 REFERENCES

The publications listed below form a part of this specification to the extent referenced. The publications are referred to in the text by the basic designation only.

AMERICAN INSTITUTE OF STEEL CONSTRUCTION (AISC)

AISC ASD Manual	(1989) Manual of Steel Construction Allowable Stress Design

AMERICAN IRON AND STEEL INSTITUTE (AISI)

AISI-01	(1996) Cold-Formed Steel Design Manual

AMERICAN SOCIETY FOR TESTING AND MATERIALS (ASTM)

ASTM A 36/A 36M	(1997a) Carbon Structural Steel
ASTM A 82	(1997) Steel Wire, Plain, for Concrete Reinforcement
ASTM A 123/A 123M	(1997a) Zinc (Hot-Dip Galvanized) Coatings on Iron and Steel Products
ASTM A 153/A 153M	(1995) Zinc Coating (Hot-Dip) on Iron and Steel Hardware
ASTM A 653/A 653M	(1997) Steel Sheet, Zinc-Coated (Galvanized) or Zinc-Iron Alloy-Coated (Galvannealed) by the Hot-Dip Process
ASTM C 67	(1996) Sampling and Testing Brick and Structural Clay Tile
ASTM C 79/C 79M	(1997) Treated Core and Nontreated Core Gypsum Sheathing Board
ASTM C 90	(1997) Load-Bearing Concrete Masonry Units
ASTM C 91	(1997) Masonry Cement
ASTM C 216	(1997) Facing Brick (Solid Masonry Units Made from Clay or Shale)
ASTM C 270	(1997a) Mortar for Unit Masonry
ASTM C 494	(1992) Chemical Admixtures for Concrete
ASTM C 578	(1995) Rigid, Cellular Polystyrene Thermal Insulation

ASTM C 591	(1994) Unfaced Preformed Rigid Cellular Polyisocyanurate Thermal Insulation
ASTM C 665	(1995) Mineral-Fiber Blanket Thermal Insulation for Light Frame Construction and Manufactured Housing
ASTM C 744	(1997) Prefaced Concrete and Calcium Silicate Masonry Units
ASTM C 780	(1996) Preconstruction and Construction Evaluation of Mortars for Plain and Reinforced Unit Masonry
ASTM C 954	(1996a) Steel Drill Screws for the Application of Gypsum Panel Products or Metal Plaster Bases to Steel Studs from 0.033 in. (0.84 mm) to 0.112 in. (2.84 mm) in Thickness
ASTM C 955	(1996a) Load-Bearing (Transverse and Axial) Steel Studs, Runners (Tracks), and Bracing or Bridging for Screw Application of Gypsum Panel Products and Metal Plaster Bases
ASTM C 1002	(1996a) Steel Drill Screws for the Application of Gypsum Panel Products or Metal Plaster Bases
ASTM C 1072	(1997) Measurement of Masonry Flexural Bond Strength
ASTM D 226	(1997) Asphalt-Saturated Organic Felt Used in Roofing and Waterproofing
ASTM D 1056	(1991) Flexible Cellular Materials - Sponge or Expanded Rubber
ASTM D 1330	(1985; R 1995) Rubber Sheet Gaskets
ASTM D 1667	(1997) Flexible Cellular Materials - Vinyl Chlorine Polymers and Copolymers (Closed-Cell Foam)
ASTM D 2103	(1997) Polyethylene Film and Sheeting

AMERICAN SOCIETY OF HEATING, REFRIGERATING AND AIR-CONDITIONING (ASHRAE)

ASHRAE Fundament Hdbk-IP	(1993) Handbook, Fundamentals I-P Edition

AMERICAN WELDING SOCIETY (AWS)

AWS D1.3	(1989) Structural Welding Code - Sheet Steel

DEPARTMENT OF COMMERCE (DOC)

DOC PS 1	(1996) Voluntary Product Standard - Construction and Industrial Plywood

1.2 SUBMITTALS

Government approval is required for submittals with a "GA" designation; submittals having an "FIO" designation are for information only. The following shall be submitted in accordance with Section 01330 SUBMITTAL PROCEDURES:

SD-01 Data

Masonry Veneer/Steel Stud Wall System; GA.

Calculations demonstrating the structural adequacy of steel lintels and shelf angles for the calculated gravity loads being supported; this analysis shall be in accordance with AISC ASD Manual. Test results demonstrating that the veneer anchors are structurally adequate to resist the specified loadings shall be submitted for approval. Calculations demonstrating the insulation shown on the drawings provides the specified U-value for heat transmission of the completed exterior wall construction; this analysis shall be in accordance with ASHRAE Fundament Hdbk-IP. Manufacturer's descriptive data and installation instructions for the insulation, the vapor barrier and the moisture barrier.

SD-04 Drawings

Masonry Veneer/Steel Stud Wall System; GA.

Details of cold-formed steel framing and support around openings, including framing connections, steel lintels, steel shelf angles, attachment to other building elements and bridging. Drawings shall indicate thickness, material, dimensions, protective coatings, and section properties of all steel lintels and shelf angles used in exterior wall framing. Drawings shall also indicate size and type of all fasteners including size and type of all welds. If the Contractor opts to furnish inch-pound (IP) CMU products, drawings showing elevation of walls exposed to view and indicating the location of all cut CMU products shall be submitted for approval.

SD-13 Certificates

Brick; FIO. Joint Reinforcement; FIO. Expansion Joint Materials; FIO. Insulation; FIO. Gypsum Sheathing; FIO. Moisture Barrier; FIO. Vapor Barrier; FIO. Veneer Anchors; FIO. Welders Qualification; FIO.

Certificates stating that the materials and welders meet the requirements specified. Each certificate shall be signed by an authorized certification official and shall include their organization and position and shall identify the products covered under their certifying signature.

SD-14 Samples

Expansion Joint Materials; GA. Brick; GA. Concrete Masonry Units; GA. Sample Panel; GA.

A portable panel, approximately 600 by 600 mm, containing approximately 24 brick facings to establish the range of color and texture. One of each type of masonry veneer anchor used.

1.3 SAMPLE PANEL

After the material samples are approved and prior to starting masonry work, a sample masonry panel shall be built on the project site where directed. The sample panel shall be not less than 1.8 m long by 1.2 m high. The panel shall be of typical wall thickness for the construction represented. The panel shall show color range, texture, bond pattern, expansion joints, and cleaning of the masonry as required in the work. The panel shall also show cold-formed steel framing, insulation, gypsum wallboard, gypsum sheathing, moisture barrier, vapor barrier, veneer anchors, joint reinforcement, steel shelf angles, flashing and weep holes. The approved sample panel shall be used as a standard of workmanship required in the actual installation. The sample panel shall be protected from weather and construction operations and shall not be removed until the masonry veneer/steel stud wall work has been completed and accepted.

1.4 DELIVERY, HANDLING AND STORAGE

Materials shall be delivered and handled avoiding chipping, breakage, bending or other damage, and contact with soil or other contaminating materials. The masonry products shall be stored off the ground and protected from inclement weather. Cementitious materials shall be delivered in unopened containers plainly marked and labeled with manufacturer's names and brands. Cementitious materials shall be stored in dry, weather-tight enclosures or covers. Sand and other aggregates shall be stored preventing contamination or segregation and under a weather-tight covering permitting good air circulation. Finish of the framing members shall be maintained at all times, using an approved high zinc dust content galvanizing repair paint whenever necessary to prevent the formation of rust. Insulation, moisture barrier, and gypsum sheathing shall be stored in dry, well ventilated, weather-tight areas protected from sunlight and excessive heat. Air infiltration type vapor barrier shall be stored in accordance with the manufacturer's recommendations.

1.5 EFFLORESCENCE TESTS

Efflorescence tests shall be performed by an approved commercial testing laboratory. Sampling for the tests shall be the responsibility of the Contractor. Brick shall be sampled and tested for efflorescence in accordance with ASTM C 67 and the rating shall be: "not effloresced".

PART 2 PRODUCTS

2.1 VENEER WYTHE

The source of masonry materials which will affect the appearance of the finished work shall not be changed after the work has started except with the Contracting Officer's approval. The Contractor has the option to use either hard metric or substitute inch-pound (soft-metric) masonry products. If the Contractor decides to substitute inch-pound masonry products, the following additional requirements shall be met:

a. The dimensions indicated on the drawings shall not be altered to accommodate inch-pound masonry products either horizontally or vertically. The 100 mm building module shall be maintained, except for the actual physical size of the masonry products themselves.

b. Mortar joint widths shall be maintained as specified.

c. Indicated reinforcing bar spacing shall not be exceeded. Inch-pound masonry products shall accommodate reinforcing bar placement. Reinforcing bars shall not be cut, bent or eliminated to fit into the inch-pound masonry product modules.

d. Masonry inch-pound products shall not be reduced in size by more than one-third (1/3) in height and one-half (1/2) in length. Masonry products shall not be cut at ends of walls, corners, and other openings.

e. Cut, exposed masonry products shall be held to a minimum and shall be located where they will have the least impact on the aesthetics of the facility.

f. Other building components built into the masonry products, such as window frames, door frames, louvers, fire dampers, etc., that are required to be metric, shall remain metric.

g. Additional metric guidance shall conform to Section 01415 METRIC MEASUREMENTS.

2.1.1 Clay or Shale Brick

Clay or shale brick veneer shall be masonry units conforming to ASTM C 216, Type FBS. Color range and texture shall be as indicated and shall conform to the approved sample. Grade SW shall be used for all brickwork. Brick unit sizes shall be modular.

2.2 MORTAR

Mortar shall conform to ASTM C 270, Type S. Mortar mix shall be based on proportion specifications. Laboratory testing of mortar shall be in accordance with the preconstruction evaluation of mortar section of ASTM C 780. Cement shall have a low alkali content and be of one brand. Aggregates shall be from one source.

2.2.1 Masonry Cement

Masonry cement in conformance with ASTM C 91 may be used in the mortar. When using a masonry cement a comparative test shall be performed between a Portland cement-lime mortar and the masonry cement mortar proposed for the project to evaluate the ASTM C 1072 bond and the ASTM C 780 compressive strength of the two mixes. The test shall be conducted with the proposed masonry units for the project. The masonry cement mortar will be acceptable if the bond and compressive strength values are equal to or higher than the portland cement-lime mix. The air-content of the masonry cement shall be limited to 12 percent maximum.

2.2.2 Admixtures

In cold weather, a non-chloride based accelerating admixture may be used subject to approval. Accelerating admixtures shall be non-corrosive, contain less than 0.2 percent chlorides, and conform to ASTM C 494, Type C.

2.3 JOINT REINFORCEMENT

Joint reinforcement shall be of steel wire conforming to ASTM A 82. Fabrication shall be by welding. Tack welding will not be permitted. Reinforcement shall be zinc-coated after fabrication in accordance with ASTM A 153/A 153M, Class B-2. Joint reinforcement shall consist of at least 1 continuous longitudinal wire in the veneer wythe. Minimum wire cross section shall be 11 square mm (0.017 square inches).

2.4 COLD-FORMED STEEL FRAMING

Cold-formed framing shall consist of steel studs, top and bottom tracks, runners, horizontal bridging, and other cold-formed members and other accessories. All members and components made of sheet steel shall be hot-dip galvanized in accordance with ASTM A 653/A 653M with a minimum coating thickness of G 60. Framing covered herein shall be used only in framing the exterior masonry veneer steel stud wall system as indicated on the drawings.

2.4.1 Steel Studs

Studs shall be furnished as shown in the contract drawings.

2.4.2 Runners, Tracks, Bridging and Accessories

Cold-formed steel sheet framing members, components, and accessories, other than the steel studs, shall conform to ASTM C 955 and be of steel conforming to ASTM A 653/A 653M, Grade 33, having a minimum yield strength of 230 MPa.

2.5 INSULATION

2.5.1 Blanket Insulation

Insulation placed between the steel studs shall be batt or blanket type mineral wool conforming to ASTM C 665.

2.5.2 Rigid Board-Type Insulation

Insulation for wall cavities shall be rigid board-type insulation. Rigid board-type insulation shall be either polystyrene conforming to ASTM C 578, Type I or II, Grade 2 or polyurethane conforming to ASTM C 591. Insulation thickness shall be sufficient to provide an R-value as noted under Section 13120.

2.6 GYPSUM WALLBOARD

Gypsum wallboard that is installed on the interior side of the cold-formed steel framing system shall be as specified in Section 09250 GYPSUM WALLBOARD.

2.7 EXTERIOR SHEATHING

Gypsum sheathing that is installed on the exterior side of the cold-formed steel framing system shall have a minimum thickness of 13 mm and shall be 1.2 m wide. Gypsum sheathing shall conform to

ASTM C 79/C 79M. Gypsum sheathing shall have a water-resistant gypsum core with a water-repellent paper firmly bonded to the core.

2.8 MOISTURE PROTECTION

2.8.1 Moisture Barrier

The moisture barrier shall be 6.7 kg asphalt-saturated felt conforming to ASTM D 226 Type I (No. 15).

2.8.2 Vapor Retarder

The vapor retarder shall be polyethylene film conforming to ASTM D 2103, 0.15 mm (6 mil) minimum thickness.

2.8.3 Staples

Staples for attaching the moisture barrier to the exterior sheathing shall be the type and size best suited to provide a secure connection. Staples shall be made from either galvanized steel or stainless steel wire.

2.8.4 Joint Tape

Tape for sealing the joints in the vapor retarder shall be laminated tape with pressure sensitive adhesive as recommended by the manufacturer of the polyethylene film.

2.9 VENEER ANCHORS

Anchor assemblies for the attachment of the masonry veneer to the cold-formed steel framing, structural steel and/or concrete beam and column members, and concrete floor slabs shall be designed for the design loadings shown. Anchors shall transfer the design loadings from the masonry veneer to the cold-formed steel framing system or other support without exceeding the allowable stresses and deflections in the anchors. Length of anchor wires shall be such that the outermost wires lie between 32 mm from each face of the masonry veneer. Anchors wires shall not have drips. Wires for veneer anchors shall be rectangular or triangular hoops formed from 5 mm diameter steel wire conforming to ASTM A 82. Anchor assemblies including wires and anchor plates shall be hot-dip galvanized conforming to ASTM A 153/A 153M, Class B-2. The veneer anchor shall have a minimum capacity of 900 newtons. The load-displacement capacity of each veneer anchor, both in direct pull-out for tension and compression, shall be not less than 350 kilo newtons per meter (2000 pounds per inch) (or a deflection of 2.85 mm per kilo newton (0.05 inches per 100 pounds) of load in tension or compression). In the direction perpendicular to the masonry veneer, the anchor assembly shall have a maximum play of 1.6 mm.

2.9.1 Adjustable Pintle-Eye Type Wire Anchors

Adjustable pintle-eye type wall anchors shall be two pieces rectangular type double pintle anchors.

2.9.2 Dovetail Anchors

Dovetail slots are specified in Section 03300 CAST-IN-PLACE STRUCTURAL CONCRETE.

2.10 CONNECTIONS

Screws, bolts and anchors shall be hot-dip galvanized in accordance with ASTM A 123/A 123M or ASTM A 153/A 153M as appropriate.

2.10.1 Framing Screws, Bolts and Anchors

Screws, bolts and anchors used in the assembly of the cold-formed steel framing system shall be as required by design of the framing system for the specified loading. Screw, bolt and anchor sizes shall be shown on the detail drawings.

2.10.2 Welding

Welded connections shall be designed and all welding shall be performed in accordance with AWS D1.3, as modified by AISI-01. Welders shall be qualified in accordance with AWS D1.3. All welds shall be cleaned and touched-up with zinc-rich paint.

2.10.3 Veneer Anchor Screws

Screws for attachment of the veneer anchors to the cold-formed steel framing members shall be as required by design to provide the needed pullout load capacity but not less than No. 12. Screws shall be shown on the detail drawings. The length of screws shall be such that the screws penetrate the holding member by not less than 16 mm.

2.10.4 Gypsum Sheathing Screws

Screws for attachment of gypsum sheathing to cold-formed steel framing shall conform to ASTM C 1002, Type S.

2.11 SYNTHETIC RUBBER WASHERS

Synthetic rubber washers for placement between veneer anchors and the moisture barrier on the outside face of the exterior sheathing shall conform to ASTM D 1330, Grade I.

2.12 EXPANSION JOINT MATERIAL

Expansion joint materials shall be bellows or U-shaped type conforming to Section 07600 SHEET METALWORK, GENERAL. Premolded type shall be closed-cell cellular rubber conforming to ASTM D 1056 or closed-cell vinyl or polyvinyl chloride conforming to ASTM D 1667.

2.13 FLASHING

Copper or stainless steel flashing shall conform to the requirements in Section 07600 SHEET METALWORK, GENERAL. Flashing shall be supplied in a continuous sheet extending from the exterior sheathing across the cavity and through the masonry veneer as shown.

2.14 STEEL LINTELS AND SHELF ANGLES

Steel shapes used for lintels and shelf angles shall conform to ASTM A 36/A 36M. Lintels and shelf angles shall be provided as shown. These steel members shall be hot-dip galvanized in accordance with ASTM A 123/A 123M.

2.15 CAULKING AND SEALANTS

Caulking and sealants shall be as specified in Section 07900 JOINT SEALING.

PART 3 EXECUTION

3.1 GENERAL INSTALLATION REQUIREMENTS

Wall sections, types of construction and dimensions shall be as shown. Metal door and window frames and other special framing shall be built and anchored into the wall system as indicated.

3.2 STEEL STUD WALL FRAMING

The top track of the stud wall system shall be slip jointed to accommodate vertical deflections of the supporting members as shown on the drawings. Top and bottom tracks shall be securely anchored to resist track rotation by alternating fastener locations to provide two rows, one row near each track flange as shown on the drawings. Both flanges of all steel studs shall be securely fastened with screws to the flanges of the top and bottom tracks as shown on the drawings. All details for affixing steel studs to runners and all other sheet steel framing members along with all details necessary for anchorage of the steel stud wall system to the building structural systems shall be as shown on the drawings. Horizontal bridging shall be provided as necessary. Studs shall be spaced as required to resist the specified design wind or seismic loadings, but not exceeding on center spacing indicated on drawings. Coordinate stud spacing with sheathing and anchor requirements. At wall openings for doors, windows and other similar features, the framing system shall provide for the installation and anchorage of the required subframes or finish frames. Steel frames shall be securely attached through built-in anchors to the nearest stud on each side of the opening with self-drilling screws. Double studs shall be provided at both jambs of all door openings. Door frames and other built-in items shall be grouted solid.

3.3 STEEL SHELF ANGLES

Unless otherwise shown, steel shelf angles shall be provided in segments that do not exceed 3.0 m in length. At building corners, shelf angle segments shall be mitered and securely attached together by welding with legs no less than 1.2 m where possible. Shelf angle segments shall not be connected together but instead shall be installed with 6 mm wide gaps between the segments. Fabrication and erection tolerances shall be in accordance with the AISC Code of Standard Practice, as indicated in AISC ASD Manual.

3.4 INSULATION

The actual installed thickness of insulation shall provide a minimum thermal R of 1.76 sqmk/ w (11 square ft/Btuh) for the completed exterior wall construction as determined in accordance with ASHRAE Fundament Hdbk-IP. Insulation thickness shall be as shown on the approved drawings. Installation, except as otherwise specified or shown, shall be in accordance with the manufacturer's instructions which shall be approved by the Contracting Officer. Insulation shall be installed between wall framing members. Insulation with facings shall be secured to the sides of the framing members to provide a continuous seal so that the entire weight of the insulation is carried by the framing members. Where electrical outlets, ducts, pipes, vents or other utility items occur, insulation shall be placed on the dry side of the item away from excessive humidity.

3.5 GYPSUM WALLBOARD

Gypsum wallboard shall be installed on the interior face of the cold-formed steel framing system. Installation shall be as specified in Section 09250 GYPSUM WALLBOARD except at vertical slip joints, the gypsum wallboard shall be connected to the vertical studs to prevent movement at the slip joint.

3.6 EXTERIOR SHEATHING

Sheathing shall be installed on the exterior face of the cold-formed steel framing system with self-drilling screws. Screws shall be located a minimum of 10 mm from the ends and edges of sheathing panels and shall be spaced not more than 200 mm on each supporting member except at vertical slip joints, the sheathing shall be connected to the vertical studs to prevent movement of the slip joint. Edges and ends of gypsum sheathing panels shall be butted snugly with vertical joints staggered to provide full and even support for the moisture barrier. Holes and gaps resulting from abandoned screw installations, from damage to panels, and from cutting and fitting of panels at junctures with doors, windows, foundation walls, floor slabs and other similar locations shall be filled with exterior rubber-base caulk.

3.7 MOISTURE PROTECTION

3.7.1 Moisture Barrier

The asphalt-saturated felt or other approved moisture barrier shall be installed on the outer face of the exterior sheathing. The moisture barrier shall be installed horizontally and shingled with each sheet lapped not less than 150 mm over the sheet below. Vertical end joints shall be lapped not less than 150 mm and shall be staggered. Attachment of the moisture barrier shall be with staples spaced not greater than 400 mm on center or as required by the manufacturer.

3.7.2 Vapor Retarder

A vapor retarder shall be installed between the steel studs and the gypsum wall. The vapor retarder shall be installed in accordance with the manufacturer's recommendations to form a complete retarder to vapor infiltration. The joints shall be lapped and sealed with tape.

3.8 VENEER ANCHORS

Veneer anchors shall be attached with screws through the sheathing and rigid insulation to the steel studs or other support members at the locations shown. When rigid insulation is used, the method of connecting the veneer anchor through the insulation shall be approved by the Contracting Officer. Veneer anchors shall be installed with the outermost wires lying between 16 mm from each face of the masonry veneer. Synthetic rubber washers shall be used between the anchor connector plates and the moisture barrier. A clutch torque slip screw gun shall be used on screws attaching veneer anchors to cold-formed steel members. Veneer anchors with corrugated sheet metal or wire mesh members extending across the wall cavity shall not be used. There shall be one veneer anchor for each 0.2 square meters of wall and shall be attached to steel studs and other supports with a maximum spacing of 600 mm on center. For pintle-eye anchors the vertical distance between the pintle section horizontal wires and the eye section horizontal wires shall not exceed 13 mm. Dovetail slots shall be installed as specified in the Section 03300 CAST-IN-PLACE STRUCTURAL CONCRETE.

3.9 FLASHING

Continuous flashing shall be provided at the bottom of the wall cavity just above grade. Flashing shall also be provided above and below openings at lintels and sills, at shelf angles, and as indicated on the drawings. Flashing shall be as detailed and as specified in Section 07600 SHEET METALWORK, GENERAL. Flashing shall be lapped a minimum of 150 mm at joints and shall be sealed with a mastic as recommended by the flashing manufacturer. Ends over doors, windows and openings shall be turned up and secured. Flashing shall be lapped under the moisture barrier a minimum of 150 mm and securely attached to the gypsum sheathing. Flashing shall extend through the exterior face of the masonry veneer and shall be turned down to form a drip.

3.10 MASONRY VENEER

Exterior masonry wythes shall be constructed to the thickness indicated on the drawings. A cavity consisting of a 50 mm minimum width air space will be provided between the moisture barrier and the masonry veneer. Masonry veneer shall not be installed until the exterior sheathing, moisture barrier, veneer anchors and flashing have been installed on the cold-formed steel framing system. Extreme care shall be taken to avoid damage to the moisture barrier and flashing during construction of the masonry veneer. Any portion of the moisture barrier and flashing that is damaged shall be repaired or replaced prior to completion of the veneer. Masonry shall be placed in running bond pattern unless noted otherwise on the drawings. Longitudinal reinforcement consisting of at least one continuous galvanized steel wire shall be placed in the veneer wythe. The minimum wire size shall be 9 gauge. Vertical joints on alternating courses shall be aligned and kept vertically plumb. Solid masonry units shall be laid in a non-furrowed full bed of mortar, beveled and sloped toward the center of the wythe on which the mortar is placed. Units shall be shoved into place so that the vertical mortar joints are completely full and tight. Units that have been disturbed after the mortar has stiffened shall be removed, cleaned and relaid. Mortar which protrudes more than 13 mm into the cavity space shall be removed. Means shall be provided to ensure that the cavity space is kept clean of mortar droppings and other loose debris. Chases and raked-out joints shall be kept free from mortar and debris. Faces of units used in finished exposed areas shall be free from chipped edges, material texture or color defects or other imperfections distracting from the appearance of the finished work.

3.10.1 Surface Preparation

Surfaces on which masonry is to be laid shall be cleaned of laitance or other foreign material. No units having a film of water shall be laid.

3.10.2 Hot Weather Construction

Temperatures of masonry units and mortar shall not be greater than 50 degrees C when laid. Masonry erected when the ambient air temperature is more than 37 degrees C in the shade and when the relative humidity is less than 50 percent shall be given protection from the direct exposure to wind and sun for 48 hours after the installation.

3.10.3 Cold Weather Construction

Temperatures of masonry units and mortar shall not be less than 4 degrees C when laid. When the ambient air temperature is 0 degrees C or less, masonry veneer under construction shall be protected and maintained at a temperature greater than 0 degrees C for a period of 48 hours after installation. The proposed method of maintaining the temperature within the specified range shall be submitted for approval prior to implementation. No units shall be laid on a surface having a film of frost or water.

3.10.4 Tolerances

Masonry shall be laid plumb, level and true to line within the tolerances specified in TABLE 1. All masonry corners shall be square unless otherwise indicated on the drawings.

TABLE 1

Variation From Plumb

In adjacent units	3 mm
In 3 m	6 mm
In 6 m	10 mm
In 12 m or more	13 mm

Variation From Level Or Grades

In 3 m	3 mm
In 6 m	6 mm
In 12 m or more	13 mm

Variation From Linear Building Lines

In 6 m	13 mm
In 12 m or more	19 mm

Variation From Cross Sectional Dimensions Of Walls

Plus	13 mm
Minus	6 mm

3.10.5 Mixing of Mortar

Mortar shall be mixed in a mechanically operated mortar mixer for at least 3 minutes but not more than 5 minutes. Measurement of ingredients for mortar shall be by volume. Measurement of sand shall be accomplished by the use of a container of known capacity or shovel count based on a container of known capacity. Water shall be mixed with the dry ingredients in sufficient amount to provide a workable mixture which will adhere to the vertical surfaces of the masonry units. Mortar that has stiffened because of loss of water through evaporation shall be retempered by adding water to restore the proper consistency and workability. Mortar that has reached its initial set or that has not been used within 2-1/2 hours shall be discarded.

3.10.6 Cutting and Fitting

Wherever possible, full units shall be used in lieu of cut units. Where cut units are required to accommodate the design, cutting shall be done by masonry mechanics using power masonry saws. Wet-cut units shall be dried to the same surface-dry appearances of uncut units before being placed in the work. Cut edges shall be clean, true and sharp. Openings to accommodate pipes, conduits, and other accessories shall be neatly formed so that framing or escutcheons required will completely conceal the cut edges. Insofar as practicable, all cutting and fitting shall be accomplished while masonry work is being erected.

3.10.7 Masonry Units

When being laid, masonry units shall have suction sufficient to hold the mortar and to absorb water from the mortar, but shall be damp enough to allow the mortar to remain in a plastic state to permit the unit to be leveled and plumbed immediately after being laid without destroying bond. Masonry units with frogging shall be laid with the frog side down and better or face side exposed to view. Masonry units that are cored, recessed or otherwise deformed may be used in sills or in other areas except where deformations will be exposed to view.

3.10.8 Mortar Joints

Mortar joint widths shall be uniform and such that the specified widths are maintained throughout. Joints shall be of thickness equal to the difference between the actual and nominal dimensions of the masonry units in either height or length but in no case shall the joints be less than 6 mm nor more than 13 mm wide. Joints shall be tooled slightly concave. Tooling shall be accomplished when mortar is thumbprint hard and in a manner that will compress and seal the mortar joint and produce joints of straight and true lines free of tool marks.

3.10.9 Joint Reinforcement

Unless otherwise shown, joint reinforcement shall be spaced at 400 mm on center vertically. Joint reinforcement shall not be placed in the same masonry course as veneer anchors unless the anchors are designed to accommodate the wire. Joint reinforcement shall be placed so that longitudinal wires are centered in the veneer wythe for solid units. Longitudinal wires shall be fully embedded in mortar for their entire length. Splices in joint reinforcement shall be lapped a minimum of 150 mm. Joint reinforcement must be discontinuous at all veneer joints. The minimum cover for joint reinforcement is 16 mm.

3.10.10 Veneer Joints

Brick expansion joints shall be provided at the locations shown on the drawings. Details of joints shall be as indicated on the drawings. Joints shall be clean and free of mortar and shall contain only backer rod and sealant, installed in accordance with Section 07900 JOINT SEALING. Horizontal reinforcement shall not extend through the joints.

3.10.11 Weep Holes

Weep holes shall be provided at all flashing locations at intervals of 400 mm. Weep holes shall be placed in head joints just above the flashing. Weep holes shall be formed by leaving head joints open or head joint vents may be used. Weep holes shall be kept free of mortar and other obstructions.

3.10.12 Head Joint Vents

Head joint vents shall be provided near the top of the veneer wythe at the same spacing as the weep holes.

3.10.13 Discontinuous Work

When necessary to temporarily discontinue the work, masonry shall be stepped back for joining when work resumes. Toothing may be used only when specifically approved. Before resuming work, loose

mortar shall be removed and the exposed joint shall be thoroughly cleaned. Top of walls subjected to rain or snow shall be covered with nonstaining waterproof covering or membrane when work is not in process. Covering shall extend a minimum of 600 mm down on each side of the wall and shall be held securely in place.

3.10.14 Cleaning

Mortar daubs or splashings shall be completely removed from finished exposed masonry surfaces before they harden or set up. Before completion of the work, defects in mortar joints shall be raked out as necessary, filled with mortar, and tooled to match the adjacent existing mortar in the joints. The proposed cleaning method shall be done on the sample wall panel and the sample panel shall be examined for discoloration or stain. If the sample panel is discolored or stained, the method of cleaning shall be changed to ensure that the masonry surfaces in the structure will not be adversely affected. Masonry surfaces shall not be cleaned, other than removing excess surface mortar, until mortar in joints has hardened. Cleaning shall be accomplished with the use of stiff bristle fiber brushes, wooden paddles, wooden scrapers, or other suitable nonmetallic tools. The exposed brick surfaces shall be saturated with water and cleaned with a proprietary brick cleaning agent recommended by the clay products manufacturer. The cleaning agent shall not adversely affect the brick masonry surfaces. Proprietary cleaning agents shall be used in conformance with the cleaning product manufacturer's printed recommendations. Efflorescence or other stains shall be removed in conformance with the recommendations of the masonry unit manufacturer. After construction and cleaning, masonry surfaces shall be left clean, free of mortar daubs, stain, and discolorations, including scum from cleaning operations, and will have tight mortar joints throughout. Metallic tools and brushes shall not be used for cleaning.

3.11 BUILDING EXPANSION JOINTS

Expansion joints shall be located where indicated and shall be of the size and details shown.

END OF SECTION

SECTION 05090

WELDING, STRUCTURAL

1 PART 1 GENERAL

1.1 REFERENCES

The publications listed below form a part of this specification to the extent referenced. The publications are referred to in the text by basic designation only.

AMERICAN INSTITUTE OF STEEL CONSTRUCTION (AISC)

AISC-04	(1989) Specification for Structural Steel Buildings - Allowable Stress Design, Plastic Design

AMERICAN SOCIETY FOR NONDESTRUCTIVE TESTING (ASNT)

ASNT-01	(1996) Recommended Practice SNT-TC-1A

AMERICAN WELDING SOCIETY (AWS)

AWS A2.4	(1993) Standard Symbols for Welding, Brazing and Nondestructive Examination
AWS A3.0	(1994) Standard Welding Terms and Definitions
AWS D1.1	(1996) Structural Welding Code - Steel
AWS Z49.1	(1994) Safety in Welding and Cutting and Allied Processes

1.2 DEFINITIONS

Definitions of welding terms shall be in accordance with AWS A3.0.

1.3 GENERAL REQUIREMENTS

The design of welded connections shall conform to AISC-04 unless otherwise indicated or specified. Material with welds will not be accepted unless the welding is specified or indicated on the drawings or otherwise approved. Welding shall be as specified in this section, except where additional requirements are shown on the drawings or are specified in other sections. Welding shall not be started until welding procedures, welders, welding operators, and tackers have been qualified and the submittals approved by the Contracting Officer. Qualification testing shall be performed at or near the work site. Each Contractor performing welding shall maintain records of the test results obtained in welding procedure, welder, welding operator, and tacker performance qualifications.

1.4 SUBMITTALS

Government approval is required for submittals with a "GA" designation; submittals having an "FIO" designation are for information only. The following shall be submitted in accordance with Section 01330 SUBMITTAL PROCEDURES:

SD-08 Statements

Welding Procedure Qualifications; FIO.

Welder, Welding Operator, and Tacker Qualification; FIO.

Inspector Qualification; FIO.

Copies of the welding procedure specifications; the procedure qualification test records; and the welder, welding operator, or tacker qualification test records.

SD-18 Records

Quality Control; FIO.

A quality assurance plan and records of tests and inspections.

1.5 WELDING PROCEDURE QUALIFICATIONS

Except for prequalified (per AWS D1.1) and previously qualified procedures, each Contractor performing welding shall record in detail and shall qualify the welding procedure specification for any welding procedure followed in the fabrication of weldments. Qualification of welding procedures shall conform to AWS D1.1 and to the specifications in this section. Copies of the welding procedure specification and the results of the procedure qualification test for each type of welding which requires procedure qualification shall be submitted for approval. Approval of any procedure, however, will not relieve the Contractor of the sole responsibility for producing a finished structure meeting all the requirements of these specifications. This information shall be submitted on the forms in Appendix E of AWS D1.1. Welding procedure specifications shall be individually identified and shall be referenced on the detail drawings and erection drawings, or shall be suitably keyed to the contract drawings. In case of conflict between this specification and AWS D1.1, this specification governs.

1.5.1 Previous Qualifications

Welding procedures previously qualified by test may be accepted for this contract without requalification if the following conditions are met:

a. Testing was performed by an approved testing laboratory, technical consultant, or the Contractor's approved quality control organization.

b. The qualified welding procedure conforms to the requirements of this specification and is applicable to welding conditions encountered under this contract.

c. The welder, welding operator, and tacker qualification tests conform to the requirements of this specification and are applicable to welding conditions encountered under this contract.

1.5.2 Prequalified Procedures

Welding procedures which are considered prequalified as specified in AWS D1.1 will be accepted without further qualification. The Contractor shall submit for approval a listing or an annotated drawing to indicate the joints not prequalified. Procedure qualification shall be required for these joints.

1.5.3 Retests

If welding procedure fails to meet the requirements of AWS D1.1, the procedure specification shall be revised and requalified, or at the Contractor's option, welding procedure may be retested in accordance with AWS D1.1. If the welding procedure is qualified through retesting, all test results, including those of test welds that failed to meet the requirements, shall be submitted with the welding procedure.

1.6 WELDER, WELDING OPERATOR, AND TACKER QUALIFICATION

Each welder, welding operator, and tacker assigned to work on this contract shall be qualified in accordance with the applicable requirements of AWS D1.1 and as specified in this section. Welders, welding operators, and tackers who make acceptable procedure qualification test welds will be considered qualified for the welding procedure used.

1.6.1 Previous Qualifications

At the discretion of the Contracting Officer, welders, welding operators, and tackers qualified by test within the previous 6 months may be accepted for this contract without requalification if all the following conditions are met:

a. Copies of the welding procedure specifications, the procedure qualification test records, and the welder, welding operator, and tacker qualification test records are submitted and approved in accordance with the specified requirements for detail drawings.

b. Testing was performed by an approved testing laboratory, technical consultant, or the Contractor's approved quality control organization.

c. The previously qualified welding procedure conforms to the requirements of this specification and is applicable to welding conditions encountered under this contract.

d. The welder, welding operator, and tacker qualification tests conform to the requirements of this specification and are applicable to welding conditions encountered under this contract.

1.6.2 Certificates

Before assigning any welder, welding operator, or tacker to work under this contract, the Contractor shall submit the names of the welders, welding operators, and tackers to be employed, and certification that each individual is qualified as specified. The certification shall state the type of welding and positions for which the welder, welding operator, or tacker is qualified, the code and procedure under which the individual is qualified, the date qualified, and the name of the firm and person certifying the qualification tests. The certification shall be kept on file, and 3 copies shall be furnished. The certification shall be kept current for the duration of the contract.

1.6.3 Renewal of Qualification

Requalification of a welder or welding operator shall be required under any of the following conditions:

a. It has been more than 6 months since the welder or welding operator has used the specific welding process for which he is qualified.

b. There is specific reason to question the welder or welding operator's ability to make welds that meet the requirements of these specifications.

c. The welder or welding operator was qualified by an employer other than those firms performing work under this contract, and a qualification test has not been taken within the past 12 months. Records showing periods of employment, name of employer where welder, or welding operator, was last employed, and the process for which qualified shall be submitted as evidence of conformance.

d. A tacker who passes the qualification test shall be considered eligible to perform tack welding indefinitely in the positions and with the processes for which he is qualified, unless there is some specific reason to question the tacker's ability. In such a case, the tacker shall be required to pass the prescribed tack welding test.

1.7 INSPECTOR QUALIFICATION

Inspection and nondestructive testing personnel shall be qualified in accordance with the requirements of ASNT-01 for Levels I or II in the applicable nondestructive testing method. The inspector may be supported by assistant welding inspectors who are not qualified to ASNT-01, and assistant inspectors may perform specific inspection functions under the supervision of the qualified inspector.

1.8 SYMBOLS

Symbols shall be in accordance with AWS A2.4, unless otherwise indicated.

1.9 SAFETY

Safety precautions during welding shall conform to AWS Z49.1.

2 PART 2 PRODUCTS

2.1 WELDING EQUIPMENT AND MATERIALS

All welding equipment, electrodes, welding wire, and fluxes shall be capable of producing satisfactory welds when used by a qualified welder or welding operator performing qualified welding procedures. All welding equipment and materials shall comply with the applicable requirements of AWS D1.1.

3 PART 3 EXECUTION

3.1 WELDING OPERATIONS

3.1.1 Requirements

Workmanship and techniques for welded construction shall conform to the requirements of AWS D1.1 and AISC-04. When AWS D1.1 and the AISC-04 specification conflict, the requirements of AWS D1.1 shall govern.

3.1.2 Identification

Welds shall be identified in one of the following ways:

a. Written records shall be submitted to indicate the location of welds made by each welder, welding operator, or tacker.

b. Each welder, welding operator, or tacker shall be assigned a number, letter, or symbol to identify welds made by that individual. The Contracting Officer may require welders, welding operators, and tackers to apply their symbol next to the weld by means of rubber stamp, felt-tipped marker with waterproof ink, or other methods that do not cause an indentation in the metal. For seam welds, the identification mark shall be adjacent to the weld at 1 meter intervals. Identification with die stamps or electric etchers shall not be allowed.

3.2 QUALITY CONTROL

Testing shall be done by an approved inspection or testing laboratory or technical consultant; or if approved, the Contractor's inspection and testing personnel may be used instead of the commercial inspection or testing laboratory or technical consultant. The Contractor shall perform visual and ultrasonic inspection to determine conformance with paragraph STANDARDS OF ACCEPTANCE. Procedures and techniques for inspection shall be in accordance with applicable requirements of AWS D1.1.

3.3 STANDARDS OF ACCEPTANCE

Dimensional tolerances for welded construction, details of welds, and quality of welds shall be in accordance with the applicable requirements of AWS D1.1 and the contract drawings. Nondestructive testing shall be by visual inspection and ultrasonic methods. The minimum extent of nondestructive testing shall be as indicated on the drawings.

3.3.1 Nondestructive Examination

The welding shall be subject to inspection and tests in the mill, shop, and field. Inspection and tests in the mill or shop will not relieve the Contractor of the responsibility to furnish weldments of satisfactory quality. When materials or workmanship do not conform to the specification requirements, the Government reserves the right to reject material or workmanship or both at any time before final acceptance of the structure containing the weldment.

3.3.2 Destructive Tests

When metallographic specimens are removed from any part of a structure, the Contractor shall make repairs. The Contractor shall employ qualified welders or welding operators, and shall use the proper joints and welding procedures, including peening or heat treatment if required, to develop the full strength of the members and joints cut and to relieve residual stress.

3.4 GOVERNMENT INSPECTION AND TESTING

In addition to the inspection and tests performed by the Contractor for quality control, the Government will perform inspection and testing for acceptance to the extent determined by the Contracting Officer. The costs of such inspection and testing will be borne by the Contractor if unsatisfactory welds are discovered, or by the Government if the welds are satisfactory. The work may be performed by the Government's own forces or under a separate contract for inspection and testing. The Government reserves the right to perform supplemental nondestructive and destructive tests to determine compliance with paragraph STANDARDS OF ACCEPTANCE.

3.5 CORRECTIONS AND REPAIRS

When inspection or testing indicates defects in the weld joints, the welds shall be repaired using a qualified welder or welding operator as applicable. Corrections shall be in accordance with the requirements of AWS D1.1 and the specifications. Defects shall be repaired in accordance with the approved procedures. Defects discovered between passes shall be repaired before additional weld material is deposited. Wherever a defect is removed and repair by welding is not required, the affected area shall be blended into the surrounding surface to eliminate sharp notches, crevices, or corners. After a defect is thought to have been removed, and before rewelding, the area shall be examined by suitable methods to ensure that the defect has been eliminated. Repair welds shall meet the inspection requirements for the original welds. Any indication of a defect shall be regarded as a defect, unless reevaluation by nondestructive methods or by surface conditioning shows that no unacceptable defect is present.

END OF SECTION

SECTION 05120

STRUCTURAL STEEL

1 GENERAL

1.1 REFERENCES

The publications listed below form a part of this specification to the extent referenced. The publications are referred to in the text by basic designation only.

AMERICAN INSTITUTE OF STEEL CONSTRUCTION (AISC)

AISC FCD	(1995a) Quality Certification Program Description
AISC ASD Mnl	(1989) Manual of Steel Construction Allowable Stress Design
AISC ASD/LRFD Vol II	(1992) Manual of Steel Construction Vol II: Connections
AISC Design Guide #10	(1989) Erection Bracing of Low-Rise Structural Steel Frames
AISC LRFD Vol I	(1995) Manual of Steel Construction Load & Resistance Factor Design, Vol I: Structural Members, Specifications & Codes
AISC LRFD Vol II	(1995) Manual of Steel Construction Load & Resistance Factor Design, Vol II: Structural Members, Specifications & Codes
AISC Pub No. S303	(1992) Code of Standard Practice for Steel Buildings and Bridges

AMERICAN SOCIETY FOR TESTING AND MATERIALS (ASTM)

ASTM A 6/A 6M	(1997) General Requirements for Rolled Structural Steel Bars, Plates, Shapes, and Sheet Piling
ASTM A 36/A 36M	(1996) Carbon Structural Steel
ASTM A 53	(1997) Pipe, Steel, Black and Hot-Dipped, Zinc-Coated, Welded and Seamless
ASTM A 242/A 242M	(1993a) High-Strength Low-Alloy Structural Steel
ASTM A 307	(1994) Carbon Steel Bolts and Studs, 60 000 PSI Tensile Strength
ASTM A 325	(1997) Structural Bolts, Steel, Heat Treated, 120/105 ksi Minimum Tensile Strength

ASTM A 325M	(1993) High-Strength Bolts for Structural Steel Joints (Metric)
ASTM A 490	(1997) Heat-Treated Steel Structural Bolts, 150 ksi Minimum Tensile Strength
ASTM A 490M	(1993) High-Strength Steel Bolts, Classes 10.9 and 10.9.3, for Structural Steel Joints (Metric)
ASTM A 500	(1996) Cold-Formed Welded and Seamless Carbon Steel Structural Tubing in Rounds and Shapes
ASTM A 501	(1996) Hot-Formed Welded and Seamless Carbon Steel Structural Tubing
ASTM A 502	(1993) Steel Structural Rivets
ASTM A 514/A 514M	(1994a) High-Yield-Strength, Quenched and Tempered Alloy Steel Plate, Suitable for Welding
ASTM A 529/A 529M	(1996) High-Strength Carbon-Manganese Steel of Structural Quality
ASTM A 563	(1996) Carbon and Alloy Steel Nuts
ASTM A 563M	(1996) Carbon and Alloy Steel Nuts (Metric)
ASTM A 572/A 572M	(1997) High-Strength Low-Alloy Columbium-Vanadium Structural Steel
ASTM A 588/A 588M	(1997) High-Strength Low-Alloy Structural Steel with 50 ksi (345 MPa) Minimum Yield Point to 4 in. (100 mm) Thick
ASTM A 618	(1996) Hot-Formed Welded and Seamless High-Strength Low-Alloy Structural Tubing
ASTM A 709/A 709M	(19997a) Carbon and High-Strength Low-Alloy Structural Steel Shapes, Plates, and Bars and Quenched-and-Tempered Alloy Structural Steel Plates for Bridges
ASTM A 852/A 852M	(1997) Quenched and Tempered Low-Alloy Structural Steel Plate with 70 ksi (485 MPa) Minimum Yield Strength to 4 in. (100 mm) Thick
ASTM F 436	(1993) Hardened Steel Washers
ASTM F 436M	(1993) Hardened Steel Washers (Metric)
ASTM F 844	(1990) Washers, Steel, Plain (Flat), Unhardened for General Use

ASTM F 959	(1996) Compressible-Washer-Type Direct Tension Indicators for Use with Structural Fasteners

AMERICAN SOCIETY OF MECHANICAL ENGINEERS (ASME)

ASME B18.21.1	(1994) Lock Washers (Inch Series)
ASME B46.1	(1995) Surface Texture (Surface Roughness, Waviness, and Lay)

AMERICAN WELDING SOCIETY (AWS)

AWS A2.4	(1993) Standard Symbols for Welding, Brazing and Nondestructive Examination
AWS D1.1	(1996) Structural Welding Code - Steel

STEEL STRUCTURES PAINTING COUNCIL (SSPC)

SSPC Paint 25	(1991) Red Iron Oxide, Zinc Oxide, Raw Linseed Oil and Alkyd Primer (without Lead and Chromate Pigments)

1.2 GENERAL REQUIREMENTS

Structural steel fabrication and erection shall be performed by an organization experienced in structural steel work of equivalent magnitude. The Contractor shall be responsible for correctness of detailing, fabrication, and for the correct fitting of structural members. Connections, for any part of the structure not shown on the contract drawings, shall be considered simple shear connections and shall be designed and detailed in accordance with pertinent provisions of AISC ASD Mnl and AISC LRFD Vol II. Substitution of sections or modification of connection details will not be accepted unless approved by the Contracting Officer. AISC ASD Mnl and AISC ASD/LRFD Vol II shall govern the work. Welding shall be in accordance with AWS D1.1. High-strength bolting shall be in accordance with AISC ASD Mnl

1.3 SUBMITTALS

Government approval is required for submittals with a "GA" designation; submittals having an "FIO" designation are for information only. The following shall be submitted in accordance with Section 01330 SUBMITTAL PROCEDURES:

SD-04 Drawings

Structural Steel System; GA. Structural Connections; GA.

Shop and erection details including members (with their connections) not shown on the contract drawings. Welds shall be indicated by standard welding symbols in accordance with AWS A2.4.

SD-08 Statements

Erection; GA.

Prior to erection, erection plan of the structural steel framing describing all necessary temporary supports, including the sequence of installation and removal.

SD-13 Certificates

Mill Test Reports; FIO.

Certified copies of mill test reports for structural steel, structural bolts, nuts, washers and other related structural steel items, including attesting that the structural steel furnished contains no less than 25 percent recycled scrap steel and meets the requirements specified, prior to the installation.

Welder Qualifications; FIO.

Certified copies of welder qualifications test records showing qualification in accordance with AWS D1.1.

Fabrication; FIO.

A copy of the AISC certificate indicating that the fabrication plant meets the specified structural steelwork category.

SD-14 Samples

High Strength Bolts and Nuts; FIO. Carbon Steel Bolts and Nuts; FIO. Nuts Dimensional Style; FIO. Washers; FIO

Random samples of bolts, nuts, and washers as delivered to the job site if requested, taken in the presence of the Contracting Officer and provided to the Contracting Officer for testing to establish compliance with specified requirements.

1.4 STORAGE

Material shall be stored out of contact with the ground in such manner and location as will minimize deterioration.

2 PRODUCTS

2.1 STRUCTURAL STEEL

2.1.1 Carbon Grade Steel

Carbon grade steel shall conform to ASTM A 36/A 36M.

2.1.2 High-Strength Low-Alloy Steel

High-strength low-alloy steel shall conform to ASTM A 572/A 572M, Grade 50.

2.1.3 Quenched and Tempered Alloy Steel

Tempered alloy steel shall conform to ASTM A 514/A 514M.

2.1.4 Carbon and High-Strength Low-Alloy Steel

Carbon and high-strength low-alloy steel shall conform to ASTM A 709/A 709M.

2.1.5 Quenched and Tempered Low-Alloy Steel

Quenched and tempered low-alloy steel shall conform to ASTM A 852/A 852M, 485 MPa.

2.2 STRUCTURAL TUBING

Structural tubing shall conform to ASTM A 500, Grade B.

2.3 STEEL PIPE

Steel pipe shall conform to ASTM A 53, Type S, Grade B.

2.4 HIGH STRENGTH BOLTS AND NUTS

High strength bolts shall conform to ASTM A 325M, Type 1 with carbon steel nuts conforming to ASTM A 563M, Grade C, or ASTM A 490M , Type 1 with carbon steel nuts conforming to ASTM A 563M , Grade DH.

2.5 CARBON STEEL BOLTS AND NUTS

Carbon steel bolts shall conform to ASTM A 307, Grade A with carbon steel nuts conforming to ASTM A 563M, Grade A.

2.6 NUTS DIMENSIONAL STYLE

Carbon steel nuts shall be Square style when used with ASTM A 307 bolts or Heavy Hex style when used with ASTM A 325M or ASTM A 490M bolts.

2.7 WASHERS

Plain washers shall conform to ASTM F 844. Other types, when required, shall conform to ASTM F 436M.

2.8 PAINT

Paint shall conform to SSPC Paint 25.

3 EXECUTION

3.1 FABRICATION

Fabrication shall be in accordance with the applicable provisions of AISC ASD Mnl. Fabrication and assembly shall be done in the shop to the greatest extent possible. The fabricating plant shall be

certified under the AISC FCD for Category e structural steelwork. Compression joints depending on contact bearing shall have a surface roughness not in excess of 13 micrometer as determined by ASME B46.1, and ends shall be square within the tolerances for milled ends specified in ASTM A 6/A 6M. Structural steelwork, except surfaces of steel to be encased in concrete, surfaces to be field welded, surfaces to be fireproofed, and contact surfaces of friction-type high-strength bolted connections shall be prepared for painting in accordance with [\endorsement "P" of AISC FCD and primed with the specified paint.

3.2 ERECTION

a: Erection of structural steel, except as indicated in item b. below, shall be in accordance with the applicable provisions of AISC ASD Mnl. Erection plan shall be reviewed, stamped and sealed by a structural engineer licensed by the state in which the project is located.

b. For low-rise structural steel buildings (18 m tall or less and a maximum of 2 stories), the erection plan shall conform to AISC Pub No. S303 and the structure shall be erected in accordance with AISC Design Guide #10.

3.2.1 Structural Connections

Anchor bolts and other connections between the structural steel and foundations shall be provided and shall be properly located and built into connecting work. Field welded structural connections shall be completed before load is applied.

3.2.2 Base Plates and Bearing Plates

Column base plates for columns and bearing plates for beams, girders, and similar members shall be provided. Base plates and bearing plates shall be provided with full bearing after the supported members have been plumbed and properly positioned, but prior to placing superimposed loads. Separate setting plates under column base plates will not be permitted. The area under the plate shall be damp-packed solidly with bedding mortar, except where nonshrink grout is indicated on the drawings. Bedding mortar and grout shall be as specified in Section 03300 CAST-IN-PLACE STRUCTURAL CONCRETE.

3.2.3 Field Priming

After erection, the field bolt heads and nuts, field welds, and any abrasions in the shop coat shall be cleaned and primed with paint of the same quality as that used for the shop coat.

END OF SECTION

SECTION 05300

STEEL DECKING

1 PART 1 GENERAL

1.1 REFERENCES

The publications listed below form a part of this specification to the extent referenced. The publications are referred to in the text by basic designation only.

AMERICAN INSTITUTE OF STEEL CONSTRUCTION (AISC)

AISC-04	(1989) Specification for Structural Steel Buildings - Allowable Stress Design and Plastic Design

AMERICAN IRON AND STEEL INSTITUTE (AISI)

AISI-01	(1996) Cold-Formed Steel Design Manual

AMERICAN SOCIETY FOR TESTING AND MATERIALS (ASTM)

ASTM A 108	(1995) Steel Bars, Carbon, Cold Finished, Standard Quality
ASTM A 570/A 570M	(1996) Steel, Sheet and Strip, Carbon, Hot-Rolled, Structural Quality
ASTM A 611	(1996) Steel, Sheet, Carbon, Cold-Rolled, Structural Quality
ASTM A 653/A 653M	(1996) Steel Sheet, Zinc-Coated (Galvanized) or Zinc-Iron Alloy-Coated (Galvannealed) by the Hot-Dip Process
ASTM A 780	(1993a) Repair of Damaged and Uncoated Areas of Hot-Dipped Galvanized Coatings
ASTM A 792/A 792M	(1996) Steel Sheet, 55% Aluminum-Zinc Alloy-Coated by the Hot-Dip Process
ASTM C 423	(1990a) Sound Absorption and Sound Absorption Coefficients by the Reverberation Room Method
ASTM E 795	(1993) Mounting Test Specimens During Sound Absorption Tests

AMERICAN WELDING SOCIETY (AWS)

AWS D1.1	(1996) Structural Welding Code - Steel
AWS D1.3	(1989) Structural Welding Code - Sheet Steel

STEEL DECK INSTITUTE (SDI)

SDI-02	(1987; Amended 1991) Diaphragm Design Manual
SDI Pub No 29	(1995) Design Manual for Composite Decks, Form Decks, Roof Decks, and Cellular Metal Floor Deck with Electrical Distribution

STEEL STRUCTURES PAINTING COUNCIL (SSPC)

SSPC Paint 20	(1991) Zinc-Rich Primers (Type I - Inorganic and Type II - Organic)

1.2 SUBMITTALS

Government approval is required for submittals with a "GA" designation; submittals having an "FIO" designation are for information only. The following shall be submitted in accordance with Section 01330 SUBMITTAL PROCEDURES:

SD-01 Data

Deck Units; FIO.

Design computations for the structural properties of the deck units or SDI certification that the units are designed in accordance with SDI specifications.

SD-04 Drawings

Deck Units; GA. Accessories; FIO. Attachments; FIO. Holes and Openings; FIO.

Drawings shall include type, configuration, structural properties, location, and necessary details of deck units, accessories, and supporting members; size and location of holes to be cut and reinforcement to be provided; location and sequence of welded connections; and the manufacturer's erection instructions.

SD-13 Certificates

Deck Units; FIO. Attachments; FIO.

Manufacturer's certificates attesting that the decking material meets the specified requirements. Manufacturer's certificate attesting that the operators are authorized to use the low-velocity piston tool.

SD-14 Samples

Deck Units; FIO. Accessories; FIO.

A 0.19 sq meter sample of the decking material to be used, along with a sample of each of the accessories used. A sample of acoustical material to be used shall be included.

SD-18 Records

Attachments; FIO.

Prior to welding operations, copies of qualified procedures and lists of names and identification symbols of qualified welders and welding operators.

1.3 DELIVERY, STORAGE, AND HANDLING

Deck units shall be delivered to the site in a dry and undamaged condition, stored off the ground with one end elevated, and stored under a weather tight covering permitting good air circulation. Finish of deck units shall be maintained at all times by using touch-up paint whenever necessary to prevent the formation of rust.

2 PART 2 PRODUCTS

2.1 DECK UNITS

Deck units shall conform to SDI Pub No 29. Panels of maximum possible lengths shall be used to minimize end laps. Deck units shall be fabricated in lengths to span 3 or more supports with flush, telescoped, or nested 50 mm laps at ends, and interlocking, or nested side laps, unless otherwise indicated. Deck with cross-sectional configuration differing from the units indicated may be used, provided that the properties of the proposed units, determined in accordance with AISI-01, are equal to or greater than the properties of the units indicated and that the material will fit the space provided without requiring revisions to adjacent materials or systems.

2.1.1 Roof Deck

Steel deck used in conjunction with insulation and built-up roofing shall conform to ASTM A 792/A 792M, ASTM A 611 or ASTM A 792/A 792M. Roof deck units shall be fabricated of the steel design thickness required by the design drawings and shall be shop painted.

2.1.2 Composite Deck

Deck to receive concrete as a filler or for composite deck assembly shall conform to ASTM A 653/A 653M. Deck used as the tension reinforcing in composite deck shall be fabricated of the steel design thickness required by the design drawings, and shall be zinc-coated in conformance with ASTM A 653/A 653M, G90 coating class. Deck units used in composite deck shall have adequate embossment to develop mechanical shear bond to provide composite action between the deck and the concrete.

2.2 TOUCH-UP PAINT

Touch-up paint for shop-painted units shall be of the same type used for the shop painting, and touch-up paint for zinc-coated units shall be an approved galvanizing repair paint with a high-zinc dust content. Welds shall be touched-up with paint conforming to SSPC Paint 20 in accordance with ASTM A 780. Finish of deck units and accessories shall be maintained by using touch-up paint whenever necessary to prevent the formation of rust.

2.3 ADJUSTING PLATES

Adjusting plates or segments of deck units shall be provided in locations too narrow to accommodate full-size units. As far as practical, the plates shall be the same thickness and configuration as the deck units.

2.4 CLOSURE PLATES

2.4.1 Closure Plates for Roof Deck

Voids above interior walls shall be closed with sheet metal where shown. Open deck cells at parapets, end walls, eaves, and openings through roofs shall be closed with sheet metal. Sheet metal shall be same thickness as deck units.

2.4.2 Closure Plates for Composite Deck

The concrete shall be supported and retained at each floor level. Provide edge closures at all edges of the slab of sufficient strength and stiffness to support the wet concrete. Metal closures shall be provided for all openings in composite steel deck 6 mm and over, including but not limited to:

2.4.2.1 Cover Plates to Close Panels

Cover plates to close panel edge and end conditions and where panels change direction or abut. Butt joints in composite steel deck may receive a tape joint cover.

2.4.2.2 Column Closures to Close Openings

Column closures to close openings between steel deck and structural steel columns.

2.4.2.3 Sheet Metal

Where deck is cut for passage of pipes, ducts, columns, etc., and deck is to remain exposed, provide a neatly cut sheet metal collar to cover edges of deck. Do not cut deck until after installation of supplemental supports.

2.5 ACCESSORIES

The manufacturer's standard accessories shall be furnished as necessary to complete the deck installation. Metal accessories shall be of the same material as the deck and have minimum design thickness as follows: saddles, 1.204 mm (0.0474 inch); welding washers, 1.519 mm (0.0598 inch); cant strip, 0.749 mm (0.0295 inch); other metal accessories, 0.909 mm (0.0358 inch); unless otherwise indicated. Accessories shall include but not be limited to saddles, welding washers, cant strips, butt cover plates, underlapping sleeves, and ridge and valley plates.

3 PART 3 EXECUTION

3.1 ERECTION

Erection of deck and accessories shall be in accordance with SDI Pub No 29 and the approved detail drawings. Damaged deck and accessories including material which is permanently stained or contaminated, with burned holes or deformed shall not be installed. The deck units shall be placed on

secure supports, properly adjusted, and aligned at right angles to supports before being permanently secured in place. The deck shall not be filled with concrete, used for storage or as a working platform until the units have been secured in position. [Shoring shall be in position before concrete placement begins in composite or form deck.] Loads shall be distributed by appropriate means to prevent damage during construction and to the completed assembly. The maximum uniform distributed storage load shall not exceed the design live load. There shall be no loads suspended directly from the steel deck.

3.2 ATTACHMENTS

All fasteners shall be installed in accordance with the manufacturers recommended procedure, except as otherwise specified. The deck units shall be welded with nominal 16 mm diameter puddle welds or fastened with screws, powder-actuated fasteners or pneumatically driven fasteners to supports as indicated on the design drawings and in accordance with requirements of SDI Pub No 29. All welding of steel deck shall be in accordance with AWS D1.3 using methods and electrodes as recommended by the manufacturer of the steel deck being used. Welds shall be made only by operators previously qualified by tests prescribed in AWS D1.3 to perform the type of work required. Welding washers shall not be used at the connections of the deck to supports. Welding washers shall not be used at side laps. Holes and similar defects will not be acceptable. Deck ends shall be lapped 50 mm. All partial or segments of deck units shall be attached to structural supports in accordance with Section 2.5 of SDI-02. Powder-actuated fasteners shall be driven with a low-velocity piston tool by an operator authorized by the manufacturer of the piston tool. Pneumatically driven fasteners shall be driven with a low-velocity fastening tool and shall comply with the manufacturer's recommendations.

3.3 HOLES AND OPENINGS

All holes and openings required shall be coordinated with the drawings, specifications, and other trades. Holes and openings shall be drilled or cut, reinforced and framed as indicated on the drawings or described in the specifications and as required for rigidity and load capacity. Holes and openings less than 150 mm across require no reinforcement. Holes and openings 150 to 300 mm across shall be reinforced by 1.204 mm (0.0474 inch) thick steel sheet at least 300 mm wider and longer than the opening and be fastened to the steel deck at each corner of the sheet and at a maximum of 150 mm on center. Holes and openings larger than 300 mm shall be reinforced by steel angles installed perpendicular to the purlins and supported by the adjacent purlins. Steel angles shall be installed perpendicular to the deck ribs and shall be fastened to the angles perpendicular to the purlins. Openings must not interfere with seismic members such as chords and drag struts.

3.4 PREPARATION OF FIRE-PROOFED SURFACES

Deck surfaces, both composite and non-composite, which are to receive sprayed-on fireproofing, shall be galvanized and shall be free of all grease, mill oil, paraffin, dirt, salt, and other contaminants which impair adhesion of the fireproofing. Any required cleaning shall be done prior to steel deck installation using a cleaning method that is compatible with the sprayed-on fireproofing.

END OF SECTION

This page intentionally blank

SECTION 05500

MISCELLANEOUS METAL

PART 1 GENERAL

1.1 REFERENCES

The publications listed below form a part of this specification to the extent referenced. The publications are referred to in the text by basic designation only.

AMERICAN NATIONAL STANDARDS INSTITUTE (ANSI)

ANSI A14.3	(1992) Ladders - Fixed - Safety Requirements

AMERICAN SOCIETY FOR TESTING AND MATERIALS (ASTM)

ASTM A 36	(1996) Carbon Structural Steel
ASTM A 53	(1996) Pipe, Steel, Black and Hot-Dipped, Zinc-Coated, Welded and Seamless
ASTM A 123	(1989a) Zinc (Hot-Dip Galvanized) Coatings on Iron and Steel Products
ASTM A 467	(1993) Machine and Coil Chain
ASTM A 653	(1996) Steel Sheet, Zinc-Coated (Galvanized) or Zinc-Iron Alloy-Coated (Galvannealed) by the Hot-Dip Process
ASTM A 924	(1996a) Steel Sheet, Metallic-Coated by the Hot-Dip Process
ASTM F 1267	(1991) Metal, Expanded, Steel

AMERICAN WELDING SOCIETY (AWS)

AWS D1.1	(1994) Structural Welding Code - Steel

NATIONAL ASSOCIATION OF ARCHITECTURAL METAL MANUFACTURERS (NAAMM)

NAAMM MBG 531	(1993) Metal Bar Grating Manual
NAAMM MBG 532	(1988) Heavy Duty Metal Bar Grating Manual

NATIONAL FIRE PROTECTION ASSOCIATION (NFPA)

NFPA 211	(1992) Chimneys, Fireplaces, Vents and Solid Fuel-Burning Appliances

1.2 SUBMITTALS

Government approval is required for submittals with a "GA" designation; submittals having an "FIO" designation are for information only. The following shall be submitted in accordance with Section 01330 SUBMITTAL PROCEDURES:

SD-04 Drawings

Miscellaneous Metal Items; FIO.

Detail drawings indicating material thickness, type, grade, and class; dimensions; and construction details. Drawings shall include catalog cuts, erection details, manufacturer's descriptive data and installation instructions, and templates.

1.3 GENERAL REQUIREMENTS

The Contractor shall verify all measurements and shall take all field measurements necessary before fabrication. Welding to or on structural steel shall be in accordance with AWS D1.1. Items specified to be galvanized, when practicable and not indicated otherwise, shall be hot-dip galvanized after fabrication. Galvanizing shall be in accordance with ASTM A 123, ASTM A 653, or ASTM A 924, as applicable. Exposed fastenings shall be compatible materials, shall generally match in color and finish, and shall harmonize with the material to which fastenings are applied. Materials and parts necessary to complete each item, even though such work is not definitely shown or specified, shall be included. Poor matching of holes for fasteners shall be cause for rejection. Fastenings shall be concealed where practicable. Thickness of metal and details of assembly and supports shall provide strength and stiffness. Joints exposed to the weather shall be formed to exclude water.

1.4 DISSIMILAR MATERIALS

Where dissimilar metals are in contact, or where aluminum is in contact with concrete, mortar, masonry, wet or pressure-treated wood, or absorptive materials subject to wetting, the surfaces shall be protected with a coat of bituminous paint or asphalt varnish.

1.5 WORKMANSHIP

Miscellaneous metalwork shall be well formed to shape and size, with sharp lines and angles and true curves. Drilling and punching shall produce clean true lines and surfaces. Welding shall be continuous along the entire area of contact except where tack welding is permitted. Exposed connections of work in place shall not be tack welded. Exposed welds shall be ground smooth. Exposed surfaces of work in place shall have a smooth finish, and unless otherwise approved, exposed riveting shall be flush. Where tight fits are required, joints shall be milled. Corner joints shall be coped or mitered, well formed, and in true alignment. Work shall be accurately set to established lines and elevations and securely fastened in place. Installation shall be in accordance with manufacturer's installation instructions and approved drawings, cuts, and details.

1.6 ANCHORAGE

Anchorage shall be provided where necessary for fastening miscellaneous metal items securely in place. Anchorage not otherwise specified or indicated shall include slotted inserts made to engage with the anchors, expansion shields, and power-driven fasteners when approved for concrete; toggle bolts and through bolts for masonry; machine and carriage bolts for steel; and lag bolts and screws for wood.

1.7 SHOP PAINTING

Surfaces of ferrous metal except galvanized surfaces, shall be cleaned and shop coated with the manufacturer's standard protective coating unless otherwise specified. Surfaces of items to be embedded in concrete shall not be painted. Items to be finish painted shall be prepared according to manufacturer's recommendations or as specified.

PART 2 PRODUCTS

2.1 ACCESS DOORS AND PANELS

Doors and panels shall be flush type unless otherwise indicated. Frames for access doors shall be fabricated of not lighter than 16 gauge steel with welded joints and finished with anchorage for securing into construction. Access doors shall be a minimum of 355.6 by 508 mm (14 by 20 inches) and of not lighter than 1.9939 mm (14 gauge) steel, with stiffened edges, complete with attachments. Access doors shall be hinged to frame and provided with a flush face, screw driver operated latch. Exposed metal surfaces shall have a baked enamel finish.

2.2 PIPE GUARDS

Pipe guards shall be heavy duty steel pipe conforming to ASTM A 53, Type E or S, weight STD, black finish.

2.3 NOT USED ~~DOWNSPOUT BOOTS~~

~~Downspout boots shall be cast iron with receiving bells sized to fit downspouts.~~

2.4 FLOOR GRATINGS AND FRAMES

Carbon steel grating shall be designed in accordance with NAAMM MBG 532 to meet the indicated load requirements. Edges shall be banded with bars 6.35 mm (1/4 inch) less in height than bearing bars for grating sizes above 19.05 mm (3/4 inch). Banding bars shall be flush with the top of bearing grating. Frames shall be of welded steel construction finished to match the grating. Floor gratings and frames shall be galvanized after fabrication.

2.5 HANDRAILS

Handrails shall be designed to resist a concentrated load of 90.8 kg (200 pounds) in any direction at any point of the top of the rail or 29.8 kg/m (20 pounds per foot) applied horizontally to top of the rail, whichever is more severe.

2.5.1 Steel Handrails, Including Carbon Steel Inserts

Steel handrails, including inserts in concrete, shall be steel pipe conforming to ASTM A 53. Steel railings shall be 38.1 mm (1-1/2 inch) nominal size. Railings shall be hot-dip galvanized. Pipe collars shall be hot-dip galvanized steel.

a. Joint posts, rail, and corners shall be fabricated by one of the following methods:

(1) Flush type rail fittings of commercial standard, welded and ground smooth with railing splice locks secured with 9.525 mm (3/8 inch) hexagonal recessed-head setscrews.

(2) Mitered and welded joints by fitting post to top rail and intermediate rail to post, mitering corners, groove welding joints, and grinding smooth. Railing splices shall be butted and reinforced by a tight fitting interior sleeve not less than 152.4 mm (6 inches) long.

(3) Railings may be bent at corners in lieu of jointing, provided bends are made in suitable jigs and the pipe is not crushed.

b. Removable sections, toe-boards, and brackets shall be provided as indicated.

2.6 LADDERS

Ladders shall be galvanized steel, fixed rail type in accordance with ANSI A14.3.

2.7 STORAGE SHELVING

Storage shelving shall consist of 14 gauge rolled steel channels, continuously seam-welded electro zinc plated and chromate dipped punched to accept 6 mm (1/4") lag screws and bolts for mounting to walls. Shelves shall be 300 mm (12 ") deep full height wall to ceiling.

2.8 MISCELLANEOUS

Miscellaneous plates and shapes for items that do not form a part of the structural steel framework, such as lintels, sill angles, miscellaneous mountings, and frames, shall be provided to complete the work.

2.9 PARTITIONS, DIAMOND MESH TYPE

Partitions shall be constructed of metal fabric attached to structural steel framing members. Fabric shall be 1.9939 mm (14 gauge) steel wires woven into 38.1 mm (1-1/2 inch) diamond mesh with wire secured through weaving channels. Framing members shall be channels 38.1 by 3.175 mm (1-1/2 by 1/8 inch) minimum size. Channel frames shall be mortised and tenoned at intersections. Steel frames, posts, and intermediate members shall be of the sizes and shapes indicated. Cast-iron floor shoes and caps shall have setscrew adjustment. Doors and grilles shall be provided as indicated, complete with hardware and accessories including sliding mechanisms, locks, guard plates, sill shelves and brackets, and fixed pin butts. Doors and grilles shall have cover plates as indicated. Dutch doors shall have a lock for each leaf. A continuous rubber bumper shall be provided at bottom of grille frame. Locks shall be bronze, cylinder, mortise type. Keying shall be coordinated with Section 08700 BUILDERS' HARDWARE. Ferrous metal portions of partitions and accessories shall be galvanized.

2.10 TEMPEST SECURITY

1.9939 mm (14 gauge) expanded steel, 38.1 mm (1-1/2-inches) mesh grid, conforming to ASTM F 1267. Mount to stud face where indicated on drawings and covered by GWB. Expanded metal shall be galvanized after fabrication.

2.11 SAFETY CHAINS

Safety chains shall be galvanized welded steel, proof coil chain tested in accordance with ASTM A 467, Class CS. Safety chains shall be straight link style, 4.7625 mm (3/16 inch) diameter, minimum 39 links per meter (12 links per foot) and with bolt type snap hooks on each end. Eye bolts for attachment of chains shall be galvanized 9.525 mm (3/8 inch) bolt with 19.05 mm (3/4 inch) eye, anchored as indicated. Two chains shall be furnished for each guarded opening.

2.12 SAFETY NOSING

Safety nosings shall be of cast iron with cross-hatched, abrasive surface. Nosing shall be 3 inches wide and terminating at not more than 6 inches from the ends of treads, except nosing for metal pan cement-filled treads shall extend the full length of the tread. Safety nosings shall be provided with anchors not less than 3/4 inch long. Integrally cast mushroom anchors are not acceptable.

2.13 STEEL STAIRS

Steel stairs shall be complete with structural or formed channel stringers, grating treads, landings, columns, handrails, and necessary bolts and other fastenings as indicated. Structural steel shall conform to ASTM A 36. Stairs and accessories shall be galvanized. Gratings for treads and landings shall conform to NAAMM MBG 531. Grating treads shall have slip-resistant nosings.

2.14 STEEL DOOR FRAMES

Steel door frames built from structural shapes shall be neatly mitered and securely welded at the corners with all welds ground smooth. Jambs shall be provided with 50.8 by 6.35 by 304.8 mm (2 by 1/4 by 12 inch) bent, adjustable metal anchors spaced not over 762 mm (2 feet 6 inches) on centers. Provision shall be made to stiffen the top member for all spans over 3 feet. Continuous door stops shall be made of 38.1 by 15.875 mm (1-1/2 by 5/8 inch) bars.

PART 3 EXECUTION

3.1 GENERAL INSTALLATION REQUIREMENTS

All items shall be installed at the locations shown and according to the manufacturer's recommendations. Items listed below require additional procedures as specified.

3.2 REMOVABLE ACCESS PANELS

A removable access panel not less than 304.8 by 304.8 mm (12 by 12 inches) shall be installed directly below each valve, flow indicator, damper, or air splitter that is located above the ceiling, other than an acoustical ceiling, and that would otherwise not be accessible.

3.3 INSTALLATION OF DOWNSPOUT BOOTS

Downspouts shall be secured to building through integral lips with appropriate fasteners.

3.4 ATTACHMENT OF HANDRAILS

Toeboards and brackets shall be installed where indicated. Splices, where required, shall be made at expansion joints. Removable sections shall be installed as indicated.

3.4.1 Installation of Steel Handrails

Installation shall be base plates bolted to stringers or structural steel framework. Rail ends shall be secured by steel pipe flanges through-bolted to a back plate or by 1/4 inch lag bolts to studs or solid backing.

3.5 RECESSED FLOOR MATS

Contractor shall verify field measurements prior to releasing materials for fabrication by the manufacturer. A mat frame shall be used to ensure recess accuracy in size, shape and depth. Drain pit shall be formed by blocking out concrete when frames are installed. Pit shall be dampproofed after concrete has set. Frames shall be assembled onsite and installed so that upper edge will be level with finished floor surface. A cement base shall be screeded inside the mat recess frame area using the edge provided by the frame as a guide. The frame shall be anchored into the cement with anchor pins a minimum of 609.6 mm (24 inches) on centers.

3.6 MOUNTING OF SAFETY CHAINS

Safety chains shall be mounted 1 066.8 and 609.6 mm (3 feet 6 inches and 2 feet) above the floor.

3.7 DOOR FRAMES

Door frames shall be secured to the floor slab by means of angle clips and expansion bolts. Continuous door stops shall be welded to the frame or tap screwed with countersunk screws at no more than 18 inch centers, assuring in either case full contact with the frame. Any necessary reinforcements shall be made and the frames shall be drilled and tapped as required for hardware.

END OF SECTION

SECTION 06100

ROUGH CARPENTRY

PART 1 GENERAL

1.1 REFERENCES

The publications listed below form a part of this specification to the extent referenced. The publications are referred to in the text by basic designation only.

AMERICAN FOREST AND PAPER ASSOCIATION (AFPA)

AFPA-T901	(1991; Supple 1993; Addenda Apr 95) National Design Specification for Wood Construction
AFPA T11-WCD1	(1988) Manual for Wood Frame Construction

AMERICAN SOCIETY FOR TESTING AND MATERIALS (ASTM)

ASTM A 307	(1994) Carbon Steel Bolts and Studs, 60,000 PSI Tensile Strength
ASTM F 547	(1977; R 1990) Definitions of Terms Relating to Nails for Use with Wood and Wood-Base Materials

AMERICAN WOOD-PRESERVERS' ASSOCIATION (AWPA)

AWPA C2	(1995) Lumber, Timber, Bridge Ties and Mine Ties - Preservative Treatment by Pressure Processes
AWPA M4	(1995) Standard for the Care of Preservative-Treated Wood Products
AWPA P5	(1996) Standards for Waterborne Preservatives

FACTORY MUTUAL ENGINEERING AND RESEARCH (FM)

FM P7825c	(1997) Approval Guide Building Materials

WEST COAST LUMBER INSPECTION BUREAU (WCLIB)

WCLIB Std 17	(1993) Supples III (A), V (A), & VI (A) Grading Rules for West Coast Lumber

WESTERN WOOD PRODUCTS ASSOCIATION (WWPA)

WWPA-01 (1995; Supple Nos. 1, 2, and 3) Western Lumber Grading Rules 95

1.2 SUBMITTALS

Government approval is required for submittals with a "GA" designation; submittals having an "FIO" designation are for information only. The following shall be submitted in accordance with Section 01330 SUBMITTALS:

SD-01 Data

Product Installations; FIO.

List containing name and location of successful installation of similar type of fabricated structural members specified herein.

SD-04 Drawings

Nailers and Nailing Strips; FIO.

Drawings of field erection details, including materials and methods of fastening nailers in conformance with Factory Mutual wind uplift rated systems specified in other Sections of these specifications.

SD-13 Certificates

Grading and Marking; FIO.

Manufacturer's certificates (approved by an American Lumber Standards approved agency) attesting that lumber and material not normally grade marked meet the specified requirements. Certificate of Inspection for grade marked material by an American Lumber Standards Committee (ALSC) recognized inspection agency prior to shipment.

1.3 DELIVERY AND STORAGE

Materials shall be delivered to the site in undamaged condition, stored off ground in fully covered, well ventilated areas, and protected from extreme changes in temperature and humidity.

PART 2 PRODUCTS

2.1 LUMBER

2.1.1 Grading and Marking

2.1.1.1 Lumber Products

Solid sawn and finger-jointed lumber shall bear an authorized gradestamp or grademark recognized by ALSC, or an ALSC recognized certification stamp, mark, or hammerbrand. Surfaces that are to be exposed to view shall not bear grademarks, stamps, or any type of identifying mark. Hammer marking will be permitted on timbers when all surfaces will be exposed to view.

2.1.2 Sizes

Lumber and material sizes shall conform to requirements of the rules or standards under which produced. Unless otherwise specified, lumber shall be surfaced on four sides. Unless otherwise specified, sizes indicated are nominal sizes, and actual sizes shall be within manufacturing tolerances allowed by the standard under which the product is produced.

2.1.3 Treatment

Exposed areas of treated wood that are cut or drilled after treatment shall receive a field treatment in accordance with AWPA M4.

a. Wood members in contact with water.

b. Wood members exposed to the weather including those used in built-up roofing systems.

2.1.3.1 Lumber and Timbers

Lumber and timbers shall be treated in accordance with AWPA C2 with waterborne preservatives listed in AWPA P5 to a retention level as follows:

a. 0.25 pcf intended for above ground use.

2.1.4 Moisture Content

At the time lumber and other materials are delivered and when installed in the work their moisture content shall be as follows:

a. Treated and Untreated Lumber:

4 inches or less, nominal thickness, 19 percent maximum.

2.1.5 Wood

Species and grade shall be in accordance with TABLE I at the end of this section.

2.1.6 Miscellaneous Wood Members

2.1.6.1 Non-stress Graded Members

Members shall include nailing strips. Members shall be in accordance with TABLE I for the species used. Sizes shall be as follows unless otherwise shown:

Member	Size mm (inch)
Nailing strips	22.225 x 63.5 or 22.225 x 92 mm (nominal 1 x 3 or 1 x 4) when used as shingle base or interior finish, otherwise use 41.275 mm (nominal 2 inch stock).

2.2 ACCESSORIES AND NAILS

Markings shall identify both the strength grade and the manufacturer. Accessories and nails shall conform to the following:

2.2.1 Anchor Bolts

ASTM A 307, size as indicated, complete with nuts and washers.

2.2.2 Bolts: Lag, Toggle, and Miscellaneous Bolts and Screws

Type, size, and finish best suited for intended use. Finish options include zinc compounds, cadmium, and aluminum paint impregnated finishes.

2.2.3 Expansion Shields

Type and size best suited for intended use.

2.2.4 Nails and Staples

ASTM F 547, size and type best suited for purpose; staples shall be as recommended by the manufacturer of the materials to be joined. In general, 8-penny or larger nails shall be used for nailing through 22.225 mm (nominal1 inch) thick lumber and for toe nailing 41.275 mm (nominal 2 inch) thick lumber; 16-penny or larger nails shall be used for nailing through 41.275 (nominal 2 inch) thick lumber. Nails used with treated lumber and sheathing shall be galvanized. Nailing shall be in accordance with the recommended nailing schedule contained in AFPA T11-WCD1. Where detailed nailing requirements are not specified, nail size and spacing shall be sufficient to develop an adequate strength for the connection. The connection's strength shall be verified against the nail capacity tables in AFPA-T901. Reasonable judgement backed by experience shall ensure that the designed connection will not cause the wood to split. If a load situation exceeds a reasonable limit for nails, a specialized connector shall be used.

PART 3 EXECUTION

3.1 INSTALLATION OF FRAMING

3.1.1 General

Members shall be closely fitted, accurately set to required lines and levels, and rigidly secured in place. Members shall be framed for passage of ducts. Members shall be cut, notched, or bored in accordance with applicable requirements of AFPA-T901 for the passage of pipes, wires, or conduits. Framing shall be kept at least 50.8 mm (2 inches) away from chimneys.

3.2 INSTALLATION OF MISCELLANEOUS WOOD MEMBERS

3.2.1 Nailers and Nailing Strips

Nailers and nailing strips shall be provided as necessary for the attachment of finish materials. Stacked nailers shall be assembled with spikes or nails spaced not more than 457.2 mm (18 inches) on center and staggered. Beginning and ending nails shall not be more than 6 inches for nailer end. Ends of stacked nailers shall be offset approximately 304.8 mm (12 inches) in long runs and alternated at corners. Anchors shall extend through the entire thickness of the nailer. Strips shall be run in lengths as long as practicable, butt jointed, cut into wood framing members when necessary, and rigidly secured in place. Nailers and nailer installation for Factory Mutual wind uplift rated roof systems specified in other Sections of these specifications shall conform to FM P7825c.

TABLE I. SPECIES AND GRADE

Nailers and Nailing Strips

Grading Rules	Species	Const Standard	No. 2 Comm	No. 2 Board	Comm	No. 3 Comm
WCLIB Std 17						
	Douglas Fir-Larch					X
	Hem-Fir		X			
	Sitka Spruce			X		
	Mountain Hemlock				X	
	Western Cedar				X	
WWPA-01						
	Douglas Fir-Larch			X		

Hem-Fir	X		
Idaho White Pine	X		
Lodgepole Pine			X
Ponderosa Pine		X	
Sugar Pine			X
Western Cedar		X	

-- END OF SECTION --

SECTION 06200

FINISH CARPENTRY

PART 1 GENERAL

1.1 REFERENCES

The publications listed below form a part of this specification to the extent referenced. The publications are referred to in the text by basic designation only.

AMERICAN PLYWOOD ASSOCIATION (APA)

APA E445	(1991; Rev May 1991) Performance Standards and Policies for Structural-Use Panels

ARCHITECTURAL WOODWORK INSTITUTE (AWI)

AWI-02	(1994) Architectural Woodwork Quality Standards, Guide Specifications and Quality Certification Program

CALIFORNIA REDWOOD ASSOCIATION (CRA)

CRA-RIS-01-SS	(1995) Standard Specifications for Grades of California Redwood Lumber

DEPARTMENT OF COMMERCE (DOC)

DOC PS 1	(1983) Construction and Industrial Plywood

FEDERAL SPECIFICATIONS (FS)

FS FF-N-105	(Rev B; Am 3; Int Am 4; Notice 1) Nails, Brads, Staples and Spikes: Wire, Cut and Wrought

NATIONAL HARDWOOD LUMBER ASSOCIATION (NHLA)

NHLA-01	(1994) Rules for Measurement and Inspection of Hardwood and Cypress

NORTHEASTERN LUMBER MANUFACTURERS ASSOCIATION (NELMA)

NELMA-01	(1993) Standard Grading Rules for Northeastern Lumber

SOUTHERN CYPRESS MANUFACTURER'S ASSOCIATION (SCMA)

SCMA-01	(1986; Supple No. 1, Aug 1993) Standard Specifications for Grades of Southern Cypress

SOUTHERN PINE INSPECTION BUREAU (SPIB)

SPIB-1001	(1994) Standard Grading Rules for Southern Pine Lumber

WEST COAST LUMBER INSPECTION BUREAU (WCLIB)

WCLIB Std 17 (1993) Grading Rules For West Coast Lumber

WESTERN WOOD PRODUCTS ASSOCIATION (WWPA)

WWPA-01 (1991; Supple No. 3) Western Lumber Grading Rules 91

WOOD MOULDING AND MILLWORK PRODUCERS ASSOCIATION (WMMPA)

WMMPA WM 6 (1987) Industry Standard for Non-Pressure Treating of Wood Millwork

1.2 SUBMITTALS

Government approval is required for submittals with a "GA" designation; submittals having an "FIO" designation are for information only. The following shall be submitted in accordance with Section 01330 SUBMITTAL PROCEDURES:

Data

Manufacturer’s Data; FIO.

Manufacturer's printed data, showing texture, density, catalog cuts, and installation instructions.

Drawings

Finish Carpentry; FIO.

Drawings showing fabricated items and special mill and woodwork items. Drawings shall indicate materials and details of construction, methods of fastening, erection, and installation.

Samples

Moldings; FIO. Trim; FIO.

Samples shall be of sufficient size to show patterns, color ranges, and types, as applicable, of the material proposed to be used.

1.3 DELIVERY AND STORAGE

Materials shall be delivered to the site in undamaged condition, stored off ground in fully covered, well-ventilated areas, and protected from extreme changes in temperature and humidity.

PART 2 PRODUCTS

2.1 WOOD ITEMS, SIDING, AND TRIM

2.1.1 Grading and Marking

Materials shall bear the grademark, stamp or other identifying marks indicating grades of material and rules or standards under which produced. Such identifying marks on a material shall be in accordance with

the rule or standard under which the material is produced, including requirements for qualifications and authority of the inspection organization, usage of authorized identification, and information included in the identification. The inspection agency for lumber shall be certified by the Board of Review, American Lumber Standards Committee, to grade the species used. Except for plywood and lumber, bundle marking will be permitted in lieu of marking each individual piece. Surfaces that are to be architecturally exposed to view shall not bear grademarks, stamps, or other types of identifying marks.

2.1.2 Sizes and Patterns

Lumber sizes and patterns shall conform to rules or standards under which produced. Unless otherwise specified, lumber shall be surfaced on four sides. Sizes and patterns for materials other than lumber shall conform to requirements of the rules or standards under which produced. Size references, unless otherwise specified, are nominal sizes, and actual sizes shall be within manufacturing tolerances allowed by the standard under which the product is produced.

2.1.3 Moisture Content

The maximum moisture content of untreated trim and wood siding shall be 15 percent at the time of delivery to the jobsite and when installed. Moisture content of all other material shall be in accordance with the standard under which the product is produced.

2.1.4 Preservative Treatment

2.1.4.1 Plywood

Plywood shall be treated in accordance with AWPA C9 with waterborne preservatives listed in AWPA P5 to a retention level as follows:

a. 0.007 per cubic meter (0.25 per cubic foot) intended for above ground use.

b. 0,001 per cubic meter (0.4 per cubic foot) intended for ground contact and fresh water use.

2.1.5 Trim

2.1.5.1 Wood

Trim shall be species and grade listed in TABLE I at the end of this section. Sizes shall be as indicated.

2.1.6 Moldings

Moldings shall be of the pattern indicated and shall be of a grade compatible with the finish specified.

2.1.7 Woodwork Items

2.1.7.1 Bulletin Boards

Bulletin boards shall have a hardwood or aluminum frame, 6.35 mm (1/4-inch) thick plywood or hardboard back; and a 6.35 mm (1/4-inch) thick, dense, smooth faced corkboard face securely cemented to the back.

2.1.7.2 NOT USED ~~Marker Boards~~

~~Marker boards shall have a hardwood or aluminum frame and 12.7 mm (1/2 inch) thick writing surface of porcelain enamel laminated to plywood. Color shall be white.~~

2.2 NAILS

Nails shall be the size and type best suited for the purpose and shall conform to FS FF-N-105. Nails shall be hot-dip galvanized or aluminum when used on exterior work. For siding, length of nails shall be sufficient to extend 38 mm (1-1/2 inches) into supports, including wood sheathing over framing. Screws for use where nailing is impractical shall be size best suited for purpose.

PART 3 EXECUTION

3.1 MOLDING AND INTERIOR TRIM

Molding and interior trim shall be installed straight, plumb, level and with closely fitted joints. Exposed surfaces shall be machine sanded at the mill. Molded work shall be coped at returns and interior angles and mitered at external corners. Intersections of flatwork shall be shouldered to ease any inherent changes in plane. Trim shall be provided in single lengths. Blind nailing shall be used to the extent practicable, and face nailing shall be set and stopped with a nonstaining putty to match the finish applied. Screws shall be used for attachment to metal; setting and stopping of screws shall be of the same quality as required where nails are used.

3.2 WOODWORK ITEMS

3.2.1 Bulletin Boards and White Boards

Items shall be installed in accordance with the manufacturer's recommendation.

3.2.2 Shelving

Shelving shall be anchored to supporting construction. Unless otherwise indicated, shelves shall be supported by wall-supported brackets not more than 610 mm (24 inches) on center or as required to limit deflection to 1/4 inch between supports with a load of 52 kg/m (35 lbs/ft). Adjustable shelf hardware shall be steel standards, channel shaped, with 1 inch adjustment slots and brackets designed for attachment to standards.

3.2.3 Clothes Hanger Rods

Rods shall be provided where indicated and in all closets having hook strips. Rods shall be hardwood 38 mm (1-1/2 inches) in diameter. Rods shall be set parallel with the front edges of the shelving, and shall be supported at each end by suitable sockets, and by intermediate brackets spaced at not more than 1 219 mm (48 inches) centers.

TABLE I. SPECIES AND GRADE TABLES

Grading Rules	Species	Choice	Clear	C Select	C & Better
NELMA-01	Eastern Cedar	X			
	Eastern Hemlock		X		
	Tamarack		X		
	Eastern W. Pine				X
	Northern Pine				X
	Eastern Spruce			X	
	Balsam Fir		X		
	Redwood		X		
NHLA-01	Red Oak	No. 1			
CRA-RIS-01-SS					
SPIB-1001					
WCLIB Std 17	Douglas Fir			X	
	Larch				X
	Hemlock Fir				X
	Mountain Hemlock				X
	Sitka Spruce				X
WWPA-01	Douglas Fir			X	
	Larch		X		
	Hemlock Fir		X		
	Mountain Hemlock		X		
	Western Larch		X		
	Idaho White Pine	X			
	Lodgepole Pine		X		
	Ponderosa Pine		X		
	Sugar Pine		X		
	Englemann Spruce		X		
	Douglas Fir South		X		
	Subalpine Fir		X		

NOTE 1: Western Cedar under WCLIB Std 17 shall be Grade B; and under WWPA-01, Western Cedar shall be Grade B bevel for siding and Grade A for trim.

NOTE 2: Except as specified in NOTE 3 below, siding and exterior trim shall be any of the species listed above. Interior trim shall be any one of the species listed above and the highest grade of the species for stain or natural finish and one grade below highest grade of species for paint finish.

NOTE 3: Southern Yellow Pine, Douglas Fir, Larch, Western Larch, and Tamarack shall not be used where painting is required and may be used on exterior work only when approved and stained with a preservative type stain.

END OF SECTION

THIS SECTION DELETED IN ITS ENTIRETY BY AMENDMENT R0002

SECTION 07110

BITUMINOUS DAMPPROOFING

PART 1 GENERAL

1.1 REFERENCES

The publications listed below form a part of this specification to the extent referenced. The publications are referred to in the text by basic designation only.

AMERICAN SOCIETY FOR TESTING AND MATERIALS (ASTM)

ASTM D 41	(1994) Asphalt Primer Used in Roofing, Dampproofing, and Waterproofing
ASTM D 1187	(1997) Asphalt-Base Emulsions for Use as Protective Coatings for Metal
ASTM D 1227	(1995) Emulsified Asphalt Used as a Protective Coating for Roofing
ASTM D 4479	(1993) Asphalt Roof Coatings - Asbestos Free

1.2 SUBMITTALS

Government approval is required for submittals with a "GA" designation; submittals having an "FIO" designation are for information only. The following shall be submitted in accordance with Section 01330 SUBMITTAL PROCEDURES:

SD-13 Certificates

Materials; FIO.

Certificates attesting that the materials meet the requirements specified.

1.3 QUALIFICATIONS

Work shall be performed by skilled laborers thoroughly experienced in the type of bituminous dampproofing work specified to meet the requirements of the contract.

1.4 DELIVERY, STORAGE AND HANDLING

Dampproofing materials shall be delivered to the project site in the original sealed containers bearing the name of manufacturer, contents and brand name, and stored in a weathertight enclosure to prevent moisture damage and absorption. Dampproofing materials shall be protected from freezing. Asphalt shall be stored off the ground on pallets, and covered on top and all sides with breathable-type canvas tarpaulins. Plastic sheets cause condensation buildup; and therefore, shall not be used to cover dampproofing materials. Care shall be taken during storage to avoid separation or settlement of the emulsion components. Damaged or deteriorated materials shall be removed from the project site.

PART 2 PRODUCTS

2.1 EMULSION-BASED ASPHALT DAMPPROOFING

2.1.1 Fibrated Emulsion-Based Asphalt

Fibrated emulsion-based asphalt dampproofing shall be cold-applied type conforming to ASTM D 1227 Type IV, asbestos-free, manufactured of refined asphalt, emulsifiers and selected clay, fibrated with mineral fibers. For spray or brush application, emulsion shall contain a minimum of 59 percent solids by weight, 56 percent solids by volume. For trowel application, emulsion shall contain a minimum of 58 percent solids by weight, 55 percent solids by volume.

2.1.2 Non-Fibrated Emulsion-Based Asphalt

Non-fibrated emulsion-based asphalt dampproofing shall be cold-applied type conforming to ASTM D 1187 Type II or ASTM D 1227 Type III, manufactured of refined asphalt, emulsifiers and selected clay. Asphalt shall contain a minimum 58 percent solids by weight, 55 percent solids by volume.

2.2 SOLVENT-BASED ASPHALT DAMPPROOFING

2.2.1 Asphaltic Primer

Primer for cold-applied solvent-based asphalt dampproofing shall conform to ASTM D 41, asbestos-free, non-fibrated, manufactured with highly ductile soft asphalts and selected hydrocarbons.

2.2.2 Fibrated Asphalt

Fibrated solvent-based asphalt dampproofing shall be cold-applied type conforming to ASTM D 4479 Type I, asbestos-free, manufactured with selected asphalts, stabilizers,

mineral spirits and fibrated with mineral fibers. Solvent-based asphalt shall contain 72 percent solids by weight, 65 percent solids by volume.

PART 3 EXECUTION

3.1 SURFACE PREPARATION

Surfaces scheduled for bituminous dampproofing shall be prepared in accordance with dampproofing manufacturer's recommendations. Surface preparation shall be approved prior to dampproofing application.

3.1.1 Protection of Surrounding Areas

Before starting the dampproofing work, the surrounding areas and surfaces shall be protected from spillage and migration of asphalt onto other work. Drains and conductors shall be protected from clogging with asphalt.

3.1.2 Masonry Surfaces

Surfaces shall be free of oil, grease, dirt, laitance, loose material, frost, debris and other contaminants. Mortar joints shall be flush and free of extraneous mortar and chipped or broken masonry.

3.1.3 Concrete Surfaces

Surfaces shall be properly cured, free of form release agents, oil, grease, dirt, laitance, loose material, frost, debris and other contaminants. Form ties shall be cut flush with surface. Sharp protrusions and form match lines shall be removed. Holes, voids, spalled areas and cracks which can damage the dampproofing materials and impair performance shall be repaired. Rough surfaces shall be parged with a well-adhering coat of cement mortar.

3.1.4 Metal Surfaces

Metal surfaces shall be dry and be free of rust, scale, loose paint, oil, grease, dirt, frost and debris.

3.2 APPLICATION OF BITUMINOUS DAMPPROOFING

3.2.1 Emulsion-Based Asphalt

Emulsion-based asphalt dampproofing work shall not be performed in temperatures below 5 degrees C (40 degrees F). Emulsions shall have a smooth and uniform consistency at time of application. Dampproofing materials shall be applied in accordance with manufacturer's published instructions to produce a smooth uniform dry film of not less

than 0.3048 mm (12 mils) thick without voids or defects. Dull or porous spots shall be recoated. Dampproofing materials shall seal tightly around pipes and other items projecting through dampproofing. Rates of application shall be as follows:

a. Primer: 0.16 Liters per 100 square meters (1/2 gallon per 100 square feet), cold-applied.

b. Fibrated Dampproofing: 0.64 Liters per 100 square meters (2 gallons per 100 square feet), cold-applied with spray, brush or trowel.

c. Non-fibrated Dampproofing: 0.64 Liters per 100 square meters (2 gallons per 100 square feet), cold-applied with spray, brush or trowel.

3.2.2 Solvent-Based Asphalt

Solvent-based asphalt dampproofing work shall not be performed in temperatures below 5 degrees C (40 degrees F). Dampproofing materials shall be applied in accordance with manufacturer's published instructions to produce a smooth uniform dry film not less than 12 mils thick without voids or defects. Dull or porous spots shall be recoated. Dampproofing materials shall seal tightly around pipes and other items projecting through dampproofing. Rates of application shall be as follows:

a. Primer: 0.16 Liters per 200 square meters (1/2 gallon per 200 square feet), cold-applied.

b. Dampproofing Coat: 0.64 Liters per 100 square meters (2 gallons per 100 square feet), cold-applied with spray, brush or trowel.

3.3 CLEAN-UP

Surfaces of other work which are stained with dampproofing materials shall be cleaned with a cleaner recommended by dampproofing manufacturer.

3.4 PROTECTION

The completed dampproofing work shall be protected from damage during and after construction.

END OF SECTION

SECTION 07210

BUILDING INSULATION

PART 1 - GENERAL

1.1 REFERENCES

The publications listed below form a part of this specification to the extent referenced. The publications are referred to in the text by basic designation only.

AMERICAN SOCIETY FOR TESTING AND MATERIALS (ASTM)

ASTM C 578	(1995) Rigid Cellular Polystyrene Thermal Insulation
ASTM C 612	(1993) Mineral Fiber Block and Board Thermal Insulation
ASTM E 84	(1995b) Surface Burning Characteristics of Building Materials
ASTM E 119	(1995, Rev. A) Fire Tests of Building Construction and Materials
ASTM E 136	(1995) Behavior of Materials in a Vertical Tube Furnace at 750 Degrees C.

FEDERAL SPECIFICATIONS (FS)

FS HH-I-1972/1	(Notice 1) Insulation Board, Thermal, Polyurethane or Polyisocyanurate Faced With Aluminum Foil on Both Sides of the Foam

1.2 DEFINITIONS

1.2.1 Thermal Resistivity

Where the thermal resistivity of insulation products are designed by "r-values," they represent the reciprocal of thermal conductivity (k-values). Thermal conductivity is the rate of heat flow through a homogenous material exactly 1 meter thick. Thermal resistivities are expressed by the temperature difference in degrees C between the two exposed faces required to cause one Watt to flow through one square meter at mean temperatures indicated.

1.3 SUBMITTALS

Government approval is required for submittals with a "GA" designation; submittals having an "FIO" designation are for information only. The following shall be submitted in accordance with Section 01300 SUBMITTALS:

Data

Insulation; FIO.

Manufacturer's product data for each type of insulation product specified.

Reports

Insulation; FIO.

Product test reports from and based on tests performed by qualified independent testing laboratory evidencing compliance of insulation products with requirements including r-values (aged values for plastic foam insulations), fire performance characteristics, perm ratings, water absorption ratings, and other properties, based on comprehensive testing of current products.

1.4 PERFORMANCE REQUIREMENTS

1.4.1 Fire Performance Characteristics

Provide insulation materials identical to those whose indicated fire performance characteristics have been determined per the ASTM test method indicated below, by UL or other testing and inspecting organizations acceptable to authorities having jurisdiction. Identify products with appropriate markings of applicable testing and inspecting organization.

- Surface Burning Characteristic: ASTM E 84.
- Fire Resistance Ratings: ASTM E 119.
- Combustion Characteristics: ASTM E 136.

1.4.2 Single-Source Responsibility for Insulation Products: Obtain each type of building insulation from a single source with resources to provide products of consistent quality in appearance and physical properties without delaying progress of the work.

1.5 DELIVERY, STORAGE, AND HANDLING

1.5.1 Protect insulation materials from physical damage and from deterioration by moisture, soiling, and other sources. Store inside and in a dry location. Comply with manufacturer's recommendations for handling, storage, and protection during installation.

1.5.2 Protect plastic insulation as follows:

- Do not expose to sunlight, except to extent necessary for period of installation and concealment.
- Protect against ignition at all times. Do not deliver plastic insulating materials to project site ahead of installation time.
- Complete installation and concealment of plastic materials as rapidly as possible in each area of construction.

PART 2 - PRODUCTS

2.1 INSULATING MATERIALS

2.1.1 General

Provide insulating materials that comply with requirements and with referenced standards.

2.1.1.1 Preformed Units

Sizes to fit applications indicated, selected from manufacturer's standard thicknesses, widths, and lengths.

2.1.2 Extruded Polystyrene Board Insulation For Perimeter Insulation

Rigid cellular polyisocyanurate thermal insulation with closed-cells and integral high density skin, formed by the expansion of polystyrene base resin in an extrusion process to comply with ASTM C 578 for type indicated; with 5-year aged r-values of 0.95 and 0.88 m^2 K/W per 25.4 mm thickness at 5 and 24 degrees C, respectively; and as follows:

- Type IV, 25.62 Kg min. density, unless otherwise indicated.
- Thickness: As shown on the drawings
- Surface Burning Characteristics: Maximum flame spread and smoke developed values of 75 and 450, respectively.

2.2 SAFING INSULATION AND ACCESSORIES

2.2.1 Semi-Refractory Fiber Board Safing Insulation

Semi-rigid boards designed for use as a fire stop at openings between edge of slab and exterior wall panels, produced by combining semi-refractory mineral fiber manufactured from slag with thermosetting resin binders to comply with ASTM C 612, Class 1 and 2; nominal density of 64 Kg/m^3; passing ASTM E 136 for combustion characteristics; r-value of 0.7 at 24 degrees C.

2.3 SOUND ATTENUATION BLANKETS OR BATTS

Minimum 90 mm thick fiberglass sound attenuation blankets or batts, or minimum 76 mm thick spun basalt fiber sound attenuation batts. Minimum STC Rating 48. Maximum Flame Spread 25. Maximum Smoke Development 50.

PART 3 - EXECUTION

3.1 EXAMINATION

Examine substrates and conditions with installer present, for compliance with requirements of sections in which substrates and related work are specified and to determine if other conditions affecting performance of insulation are satisfactory. Do not proceed with installation of insulation until unsatisfactory conditions have been corrected.

3.2 PREPARATION

Clean substrates of substances harmful to insulations or vapor retarders, including removal of projections that might puncture vapor retarders.

3.3 INSTALLATION, GENERAL

3.3.1 Comply with insulation manufacturer's instructions applicable to products and application indicated. If printed instructions are not available or do not apply to project conditions, consult manufacturer's technical representative for specific recommendations before proceeding with installation of insulation.

3.3.2 Extend insulation full thickness as indicated to envelop entire area to be insulated. Cut and fit tightly around obstructions, and fill voids with insulation. Remove projections that interfere with placement.

3.3.3 Apply a single layer of insulation of required thickness, unless otherwise indicated or required to make up total thickness. Thickness of sound attenuation blankets or batts shall be as specified in paragraph SOUND ATTENUATION BLANKETS OR BATTS.

3.4 INSTALLATION OF PERIMETER INSULATION

On vertical surfaces, set units in adhesive applied in accordance with manufacturer's instructions. Use type of adhesive recommended by manufacturer of insulation.

3.5 INSTALLATION OF GENERAL BUILDING INSULATION

3.5.1 Apply insulation units to substrate by method indicated, complying with manufacturer's recommendations.

3.6 INSTALLATION OF SAFING INSULATION

Cut safing insulation wider than gap to be filled to ensure compression fit and seal joint between insulation and edge of adjacent materials with calking approved by safing insulation manufacturer for this purpose. Leave no voids in completed installation.

3.7 PROTECTION

Protect installed insulation and vapor retarders from damage due to harmful weather exposures, physical abuse, and other causes. Provide temporary coverings or enclosures where insulation will be subject to abuse and cannot be concealed and protected by permanent construction immediately after installation.

END OF SECTION

SECTION 07220

ROOF INSULATION

PART 1 GENERAL

1.1 REFERENCES

The publications listed below form a part of this specification to the extent referenced. The publications are referred to in the text by basic designation only.

AMERICAN NATIONAL STANDARDS INSTITUTE (ANSI)

ANSI A208.1	(1993) Particleboard

AMERICAN SOCIETY FOR TESTING AND MATERIALS (ASTM)

ASTM C 208	(1995) Cellulosic Fiber Insulating Board
ASTM C 552	(1991) Cellular Glass Thermal Insulation
ASTM C 578	(1995) Rigid, Cellular Polystyrene Thermal Insulation
ASTM C 726	(1993) Mineral Fiber Roof Insulation Board
ASTM C 728	(1997) Perlite Thermal Insulation Board
ASTM C 1050	(1991) Rigid Cellular Polystyrene-Cellulosic Fiber Composite Roof Insulation
ASTM D 41	(1994) Asphalt Primer Used in Roofing, Dampproofing, and Waterproofing
ASTM D 4586	(1993) Asphalt Roof Cement, Asbestos Free
ASTM F 547	(1977; R 1990) Definitions of Terms Relating to Nails for Use with Wood and Wood-Base Materials

FACTORY MUTUAL ENGINEERING AND RESEARCH (FM)

FM P9513	(1996) Loss Prevention Data for Roofing Contractors
FM P7825a	(1998) Approval Guide Fire Protection
FM P7825c	(1998) Approval Guide Building Materials

UNDERWRITERS LABORATORIES (UL)

UL Bld Mat Dir (1998) Building Materials Directory

1.2 SUBMITTALS

Government approval is required for submittals with a "GA" designation; submittals having an "FIO" designation are for information only. The following shall be submitted in accordance with Section 01330 SUBMITTAL PROCEDURES:

SD-06 Instructions

Application of Insulation; FIO.

Insulation manufacturer's recommendations for the application and installation of insulation.

SD-08 Statements

Inspection; FIO.

The inspection procedure for insulation installation, prior to start of roof insulation work.

SD-13 Certificates

Insulation; FIO. Glass Roofing Felt; FIO. Organic Roofing Felt; FIO.

Certificate attesting that the expanded perlite or polyisocyanurate insulation contains recovered material and showing estimated percent of recovered material. Certificates of compliance for felt materials.

1.3 STORAGE OF MATERIALS

Extruded polystyrene shall be stored in accordance with manufacturer's instructions. Other insulation, base sheet, and felt shall be kept dry at all times, before, during, and after delivery to the site and shall be stored in an enclosed building or in a closed trailer. Wet insulation, wet base sheet or wet felt shall be permanently removed from the site. Felts shall be stacked on end one level high. Felt rolls shall be maintained at a temperature above 10 degrees C (50 degrees F) for 24 hours immediately before laying.

1.4 FIRE CLASSIFICATION

Insulation shall have been tested as part of a roof construction assembly of the type used in this project and the construction shall be listed as Fire-Classified in UL Bld Mat Dir or Class I in FM P7825a.

PART 2 PRODUCTS

2.1 BITUMINOUS MATERIALS

Bituminous materials shall conform to the following requirements:

2.1.1 Asphalt Bitumen

ASTM D 312, Type III or IV. Asphalt flash point, finished blowing temperature, and equiviscous temperature (EVT) shall be indicated on bills of lading or on individual containers.

2.1.2 Asphalt Cement

ASTM D 4586, Type I for horizontal surfaces; Type II for vertical surfaces.

2.1.3 Asphalt Primer

ASTM D 41.

2.2 INSULATION

Insulation shall be a standard product of the manufacturer and shall be factory marked with the manufacturer's name or trade mark, the material specification number, the R-value at24 degrees C (75 degrees F), and the thickness. Minimum thickness shall be as recommended by the manufacturer. Boards shall be marked individually. The thermal resistance of insulation shall be not less than the R-value shown on the drawings. The insulation manufacturing process shall not include chlorofluoro carbons (CFC) or formaldehydes. Insulation and fiberboard shall contain the highest practicable percentage of material which has been recovered or diverted from solid waste (e.g., postconsumer waste), but not including material reused in a manufacturing process. Where two materials have comparable price and performance, the one having the higher recovered material content shall be selected. Insulation shall be one, or a combination of the following materials:

2.2.1 Cellular Glass

ASTM C 552, Type IV.

2.2.2 Composite Board Insulation

ASTM C 726, or ASTM C 1050 or ASTM C 1289 Type III, or ASTM C 1289 Type VI. Perlite, in composite board, may be replaced with ANSI A208.1 wood particle board, 22.225 mm (7/16 inch) minimum thickness, provided that the composite board meets specified physical requirements. Composite board with wood particle board shall conform to ASTM C 1289, Type V.

2.2.3 Expanded-Perlite Insulation Board

ASTM C 728 with a minimum recovered material content of 23 percent of the expanded perlite portion of the board.

2.2.4 Fiberboard

ASTM C 208 Type II, Grade 1 or 2, roof insulating board with a minimum recovered material content of 80 percent, treated with sizing, wax or bituminous impregnation. Bituminous impregnation shall be limited to 4 percent by weight when used over steel decks.

2.2.5 Mineral-Fiber Insulation Board

ASTM C 726.

2.2.6 Polyisocyanurate

ASTM C 1289, Type I, or ASTM C 1289 Type II, having minimum recovered material content of 9 percent by weight of the polyisocyanurate portion of the board.

2.2.7 Polystyrene

ASTM C 578, Type II, IV, or X.

2.3 NAILS AND FASTENERS

Nails and fasteners shall conform to the following requirements:

2.3.1 Nails for Fastening Insulation to Flush Mounted Wood Nailers

ASTM F 547 of sufficient length to hold insulation securely in place.

2.3.2 Fasteners

Insulation manufacturer's recommendations except holding power, when driven, shall be not less than 54.48 grams (120 pounds) each in steel deck. Fasteners for steel or concrete decks shall conform to FM P7825c for Class I roof deck construction, and shall be spaced to withstand an uplift pressure of 4.3 kPa (90 pounds per square foot).

2.3.3 Metal Disks

Flat and not less than 0.39 mm (30 gauge) thickness. Disks used with nails or fasteners for securing fiberboard insulation shall be minimum l inch diameter. Disks used with nails or fasteners for securing other board insulation shall be minimum 54 mm (2-1/8 inches) in diameter.

2.4 GLASS ROOFING FELT

ASTM D 2178, Type IV.

2.5 WOOD NAILERS

Wood nailers shall be pressure treated. Edge nailers shall be not less than nominal 6 inches wide and of thickness to finish flush with the top surface of the insulation. Surface mounted nailers shall be a nominal 3 inches wide by the full thickness of the insulation.

PART 3 EXECUTION

3.1 COORDINATION REQUIREMENTS

Insulation and roofing membrane shall be finished in one operation up to the line of termination at the end of each day's work. Completed sections shall be waterproofed when more than one day is required to finish the roofing. Phased construction will not be permitted.

3.2 ENVIRONMENTAL CONDITIONS

Air temperature shall be above 5 degrees C (40 degrees F) and there shall be no visible ice, frost, or moisture on the roof deck when the insulation and roofing are installed.

3.3 SUBSTRATE PREPARATION

The substrate construction of any bay or section of the building shall be completed before insulation or vapor retarder work is begun thereon. Vents and other items penetrating the roof shall be secured in position and properly prepared for flashing. Prior to application of vapor retarder or insulation, substrate joints shall be covered with a 101.6 mm (4 inch) strip of roofing felt, embedded in and coated with asphalt cement. Substrate surface shall be smooth, clean, and dry at time of application.

3.4 APPLICATION OF INSULATION

Insulation shall be laid in two or more layers. Units of insulation shall be laid in courses parallel with the roof slope. End joints shall be staggered. Insulation shall be cut to fit neatly against adjoining surfaces. Joints between insulation boards shall not exceed 6.35 mm (1/4 inch). Joints in successive layers shall be staggered with respect to joints of preceding layer. Where insulation is applied over steel deck, long edge joints shall continuously bear on surfaces of the steel deck. Insulation which can be readily lifted after installation is not considered to be adequately secured. Insulation shall be applied so that all roof insulation applied each day is waterproofed the same day. Phased construction will not be permitted. Application of impermeable faced insulation shall be performed without damage to the facing.

3.4.1 Mechanical Fastening

On steel decks, or any slope exceeding 167.6 mm per meter (1/2 inch per foot), the first layer of insulation shall be mechanically fastened. Method of attachment shall be in accordance with recommendations of the insulation manufacturer and requirements specified.

3.4.2 Steel Decks

Uninsulated steel decks shall have insulation applied to span the steel deck flutes and to act as an underlayment for the roof membrane. First layer of insulation on steel deck shall be compatible with mechanical fastening.

3.4.3 Foam Insulation

Polyisocyanurate, or polystyrene foam insulations shall be isolated from built-up roof and modified bitumen membrane by a separate or composite layer of cellular glass, mineral fiber board, perlite board, or fiberboard. Polystyrene shall not be exposed to solvent-base adhesive, coal-tar bitumen or to asphalt which is hotter than 94 degrees C (200 degrees F).

3.4.4 Protection Requirements

The insulation shall be kept dry at all times. Insulation boards shall not be kicked into position. Exposed edges of the insulation shall be protected by cutoffs at the end of each work day or whenever precipitation is imminent. Cutoffs shall be 2 layers of bituminous-saturated felt set in plastic bituminous cement. Cutoffs shall be removed when work is resumed. Edges of insulation at open spaces between insulation and parapets or other walls and spaces at curbs, scuttles, and expansion joints, shall be protected until permanent roofing and flashing is applied. Storing, walking, wheeling, or trucking directly on insulation or on roofed surfaces will not be permitted. Smooth, clean board or plank walkways, runways, and platforms shall be used, as necessary to distribute weight to conform to indicated live load limits of roof construction.

3.5 INSPECTION

The Contractor shall establish and maintain an inspection procedure to assure compliance of the installed roof insulation with the contract requirements. Any work found not to be in compliance with the contract shall be promptly removed and replaced or corrected in an approved manner. Quality control shall include, but not be limited to, the following:

a. Observation of environmental conditions; number and skill level of insulation workers; start and end time of work.

b. Verification of certification, listing or label compliance with FM P9513.

c. Verification of proper storage and handling of insulation and vapor retarder materials before, during, and after installation.

d. Inspection of vapor retarder application, including edge envelopes and mechanical fastening.

e. Inspection of mechanical fasteners; type, number, length, and spacing.

f. Coordination with other materials, cants, sleepers, and nailing strips.

g. Inspection of insulation joint orientation and laps between layers, joint width and bearing of edges of insulation on deck.

h. Installation of cutoffs and proper joining of work on subsequent days.

i. Continuation of complete roofing system installation to cover insulation installed same day.

END OF SECTION

This page intentionally blank

SECTION 07416

STRUCTURAL STANDING SEAM METAL ROOF (SSSMR) SYSTEM

PART 1 GENERAL

1.1 REFERENCES

The publications listed below form a part of this specification to the extent referenced. The publications are referred to in the text by basic designation only.

ALUMINUM ASSOCIATION (AA)

AA-02 (1994) Aluminum Design Manual: Specifications and Guidelines for Aluminum Structures

AMERICAN INSTITUTE OF STEEL CONSTRUCTION (AISC)

AISC-04 (1989) Specification for Structural Steel Buildings – Allowable Stress Design, Plastic Design

AMERICAN IRON AND STEEL INSTITUTE (AISI)

AISI-01 (1986; Addenda 1989) Cold-Formed Steel Design Manual

AMERICAN SOCIETY FOR TESTING AND MATERIALS (ASTM)

ASTM A 463 (1996a) Steel Sheet, Aluminum-Coated, by the Hot-Dip Process

ASTM A 653 (1996) Steel Sheet, Zinc-Coated (Galvanized) or Zinc-Iron Alloy-Coated (Galvannealed) by the Hot-Dip Process

ASTM A 792 (1995) Steel Sheet, 55% Aluminum-Zinc Alloy-Coated by the Hot-Dip Process

ASTM B 117 (1994) Operating Salt Spray (Fog) Testing Apparatus

ASTM B 209 (1996) Aluminum and Aluminum-Alloy Sheet and Plate

ASTM C 518 (1991) Steady-State Heat Flux Measurements and Thermal Transmission Properties by Means of the Heat Flow Meter Apparatus

ASTM C 991 (1992) Flexible Glass Fiber Insulation for Pre-Engineered Metal Buildings

ASTM C 1289 (1995) Faced Rigid Cellular Polyisocyanurate Thermal Insulation Board

ASTM D 522 (1993a) Mandrel Bend Test of Attached Organic Coatings

ASTM D 523 (1989; R 1994) Specular Gloss

ASTM D 714 (1987; R 1994) Evaluating Degree of Blistering of Paints

ASTM D 968 (1993) Abrasion Resistance of Organic Coatings by Falling Abrasive

ASTM D 1308 (1987; R 1993) Effect of Household Chemicals on Clear and Pigmented Organic Finishes

ASTM D 1654 (1992) Evaluation of Painted or Coated Specimens Subjected to Corrosive Environments

ASTM D 2244 (1993) Calculation of Color Differences from Instrumentally Measured Color Coordinates

ASTM D 2247 (1994) Testing Water Resistance of Coatings in 100% Relative Humidity

ASTM D 2794 (1993) Resistance of Organic Coatings to the Effects of Rapid Deformation (Impact)

ASTM D 3359 (1995) Measuring Adhesion by Tape Test

ASTM D 4214 (1989) Evaluating the Degree of Chalking of Exterior Paint Films

ASTM D 4397 (1996) Polyethylene Sheeting for Construction, Industrial, and Agricultural Applications

ASTM D 4587 (1991) Conducting Tests on Paint and Related Coatings and Materials Using a Fluorescent UV-Condensation Light- and Water-Exposure Apparatus

ASTM E 84 (1996a) Surface Burning Characteristics of Building Materials

ASTM E 96 (1995) Water Vapor Transmission of Materials

ASTM E 1592 (1995) Structural Performance of Sheet Metal Roof and Siding Systems by Uniform Static Air Pressure Difference

AMERICAN SOCIETY OF CIVIL ENGINEERS (ASCE)

ASCE 7 (1995) Minimum Design Loads for Buildings and Other Structures

METAL BUILDING MANUFACTURERS ASSOCIATION (MBMA)

MBMA-01 (1996) Low Rise Building Systems Manual

STEEL JOIST INSTITUTE (SJI)

SJI-01 (1994) Standard Specifications Load Tables and Weight Tables for Steel Joists and Joist Girders

1.2 GENERAL REQUIREMENTS

The Contractor shall furnish a manufacturer's standard product which satisfies all requirements contained herein and has been verified by load testing and independent design analyses to meet the specified design requirements.

1.2.1 Manufacturer

The SSSMR system shall be the product of a manufacturer who has been in the practice of manufacturing SSSMR systems for a period of not less than 5 years and has been involved in at least five projects similar in size and complexity to this project.

1.2.2 Installer

The installer shall be certified by the SSSMR system manufacturer to have experience in installing at least three projects that are of comparable size, scope and complexity as this project for the particular roof system furnished. The installer may be either employed by the manufacturer or be an independent installer.

1.3 DESIGN REQUIREMENTS

The design of the SSSMR system shall be provided by the Contractor as a complete system. Members and connections not indicated on the drawings shall be designed by the Contractor. Roof panels, components, transitions, accessories, and assemblies shall be supplied by the same manufacturer.

1.3.1 Design Criteria

Design criteria shall be in accordance with ASCE 7 unless otherwise specified.

1.3.2 Dead Loads

The dead load shall be the weight of the SSSMR system. Collateral loads such as sprinklers, mechanical and electrical systems, and ceilings shall not be attached to the panels.

1.3.3 Live Loads

1.3.3.1 Concentrated Loads

The panels and anchor clips shall be capable of supporting a 1335 N (300 pound) concentrated load. The concentrated load shall be applied at the panel midspan and will be resisted by a single standing seam metal roof panel assumed to be acting as a beam. The undeformed shape of the panel shall be used to determine the section properties.

1.3.3.2 Uniform Loads

The panels and concealed anchor clips shall be capable of supporting a minimum uniform live load of 960 Pa. (20 psf). Except where snow drift is a design consideration. Panels supporting snow drift shall be designed for the actual snow load determined by building supplier.

1.3.4 Roof Snow Loads

The design roof snow loads shall be as shown on the contract drawings.

1.3.5 Wind Loads

The design wind uplift pressure for the roof system shall be as shown on the contract drawings. The design uplift force for each connection assembly shall be that pressure given for the area under consideration, multiplied by the tributary load area of the connection assembly. The safety factor listed below shall be applied to the design force and compared against the ultimate capacity. Prying shall be considered when figuring fastener design loads.

a. Single fastener in each connection.....3.0

b. Two or more fasteners in each connection...2.25

1.3.6 Thermal Loads

Roof panels shall be free to move in response to the expansion and contraction forces resulting from a total temperature range of 104 degrees C (200 degrees F) during the life of the structure.

1.3.7 Framing Members Supporting the SSSMR System

Any additions/revisions to framing members supporting the SSSMR system to accommodate the manufacturer/fabricator's design shall be the Contractor's responsibility and shall be submitted for review and approval. New or revised framing members and their connections shall be designed in accordance with AISC Cold-Formed Mn1. Maximum deflection under applied live load, snow, or wind load shall not exceed 1/180 of the span length.

1.3.8 Roof Panels Design

Steel panels shall be designed in accordance with AISI-01. Aluminum panels shall be designed in accordance with AA-02. The structural section properties used in the design of the panels shall be determined using the unloaded shape of the roof panels. The calculated panel deflection from concentrated loads shall not exceed 1/180 of the span length. The calculated panel deflection under applied live load, snow, or wind load shall not exceed 1/180 times the span length. Deflections shall be based on panels being continuous across three or more supports. Deflection shall be calculated and measured along the major ribs of the panels.

1.3.9 Accessories and Their Fasteners

Accessories and their fasteners shall be capable of resisting the specified design wind uplift forces and shall allow for thermal movement of the roof panel system. Exposed fasteners shall not restrict free movement of the roof panel system resulting from thermal forces. There shall be a minimum of two fasteners per clip. Single fasteners with a minimum diameter of 9 mm (3/8 inch) will be allowed when the supporting structural members are prepunched or predrilled.

1.4 PERFORMANCE REQUIREMENTS

The SSSMR shall be tested for wind uplift resistance in accordance with ASTM E 1592; SSSMR systems previously tested and approved by the Corps of Engineers' STANDARD TEST METHOD FOR STRUCTURAL PERFORMANCE OF SSMRS BY UNIFORM STATIC AIR PRESSURE DIFFERENCE may be acceptable. Two tests shall be performed. Test 1 shall simulate the edge condition with one end having crosswise restraint and other end free of crosswise restraint. The maximum span length for the edge condition shall be 750 mm (30 inches). Test 2 shall simulate the interior condition with both ends free of crosswise restraint. The maximum span length for the interior condition shall be 1.5 m (5.0 feet). External reinforcement, such as clamps on the ribs, shall not be installed to improve uplift resistance. Bolts through seams shall not be installed.

1.5 SUBMITTALS

Government approval is required for submittals with a "GA" designation; submittals having an "FIO" designation are for information only. The following shall be submitted in accordance with Section 01330 SUBMITTAL PROCEDURES:

SD-01 Data

Design Analysis; GA.

Design analysis signed by a Registered Professional Engineer employed by the SSSMR manufacturer. The design analysis shall include a list of the design loads, and complete calculations for the support system (when provided by the Contractor), roofing system and its components; valley designs, gutter/downspout calculations, screw pullout test results, and shall indicate how expected thermal movements are accommodated.

SD-04 Drawings

Structural Standing Seam Metal Roof System; GA.

Metal roofing drawings and specifications and erection drawings; shop coating and finishing specifications; and other data as necessary to clearly describe design, materials, sizes, layouts, standing seam configuration, construction details, provisions for thermal movement, line of panel fixity, fastener sizes and spacings, sealants and erection procedures. Drawings shall reflect the intent of the architectural detailing using the manufacturer's proprietary products and fabricated items as required. The SSSMR system shop drawings shall be provided by the metal roofing manufacturer.

SD-08 Statements

Qualifications; FIO.

Qualifications of the manufacturer and installer.

SD-09 Reports

Test Report for Uplift Resistance of the SSSMR; GA.

The report shall include the following information:

a. Details of the SSSMR system showing the roof panel cross-section with dimensions and thickness.

b. Details of the anchor clip, dimensions, and thickness.

c. Type of fasteners, size, and the number required for each connection.

d. Purlins/subpurlins size and spacing used in the test.

e. Description of the seaming operation including equipment used.

f. Maximum allowable uplift pressures. These pressures are determined from the ultimate load divided by a factor of safety equal to 1.65.

g. Any additional information required to identify the SSSMR system tested.

h. Signature and seal of an independent registered engineer who witnessed the test.

SD-13 Certificates

Structural Standing Seam Metal Roof System; FIO.

a. Certification that the actual thickness of uncoated sheets used in SSSMRS components including roofing panels, subpurlins, and concealed anchor clips complies with specified requirements.

b. Certification that materials used in the installation are mill certified.

c. Previous certification of SSSMR system tested under the Corps of Engineers' Standard Test Method in lieu of ASTM E 1592 testing.

d. Certification that the sheets to be furnished are produced under a continuing quality control program and that a representative sample consisting of not less than three pieces has been tested and has met the quality standards specified for factory color finish.

e. Certification of installer.

f. Warranty certificate. At the completion of the project the Contractor shall furnish signed copies of the 5-year Warranty for Structural Standing Seam Metal Roof (SSSMR) System, a sample copy of which is attached to this section, and the 20-year Manufacturer's Material Warranties.

Insulation; FIO.

Certificate attesting that the polyurethane or polyisocyanurate insulation furnished for the project contains recovered material, and showing an estimated percent of such recovered material.

SD-14 Samples

Accessories; FIO.

One sample of each type of flashing, trim, closure, thermal spacer block, cap and similar items. Size shall be sufficient to show construction and configuration.

Roof Panels; FIO.

One piece of each type to be used, 225 mm (9 inches) long, full width.

Factory Color Finish; FIO.

Three 75 by 125 mm (3 by 5 inches) samples of each type and color.

Fasteners; FIO.

Two samples of each type to be used, with statement regarding intended use. If so requested, random samples of bolts, nuts, and washers as delivered to the job site shall be taken in the presence of the Contracting Officer and provided to the Contracting Officer for testing to establish compliance with specified requirements.

Insulation; FIO.

One piece, 300 by 300 mm (12 by 12 inches), of each type and thickness to be used, with a label indicating the rated permeance (if faced) and R-values. The flame spread, and smoke developed rating shall be shown on the label or provided in a letter of certification.

Gaskets and Insulating Compounds; FIO.

Two samples of each type to be used and descriptive data.

Sealant; FIO.

One sample, approximately 0.5 kg (1 pound), and descriptive data.

Concealed Anchor Clips; FIO.

Two samples of each type used.

Subpurlins; FIO.

One piece, 225 mm (9 inches) long.

EPDM Rubber Boots; FIO.

One piece of each type.

1.6 DELIVERY AND STORAGE

Materials shall be delivered to the site in a dry and undamaged condition and stored out of contact with the ground. Materials shall be covered with weathertight coverings and kept dry. Storage conditions shall provide good air circulation and protection from surface staining.

1.7 WARRANTIES

The SSSMR system shall be warranted as outlined below. Any emergency temporary repairs conducted by the owner shall not negate the warranties.

1.7.1 Contractor's Weathertightness Warranty

The SSSMR system shall be warranted by the Contractor on a no penal sum basis for a period of 5 years against material and workmanship deficiencies; system deterioration caused by exposure to the elements and/or inadequate resistance to specified service design loads, water leaks, and wind uplift damage. The SSSMR system covered under this warranty shall include the entire roofing system including, but not limited to, the standing seam metal roof panels, fasteners, connectors, roof securement components, and assemblies tested and approved in accordance with ASTM E 1592. In addition, the system shall consist of panel finishes, slip sheet, insulation, vapor retarder, all accessories, components, and trim and all connections with roof panels. This includes roof penetration items such as vents, curbs, and skylights; interior or exterior gutters and downspouts; eaves, ridge, hip, valley, rake, gable, wall, or other roof system flashings installed and any other components specified within this contract to provide a weathertight roof system; and items specified in other sections of these specifications that are part of the SSSMR system. All material and workmanship deficiencies, system deterioration caused by exposure to the elements and/or inadequate resistance to specified design loads, water leaks and wind uplift damage shall be repaired as approved by the Contracting Officer. See the attached Contractor's required warranty for issue resolution of warrantable defects. This warranty shall warrant and cover the entire cost of repair or replacement, including all material, labor, and related markups. The Contractor shall supplement this warranty with written related markups. The Contractor shall supplement this warranty with written warranties from the installer and system manufacturer, which shall be submitted along with Contractor's warranty; however, the Contractor shall be ultimately responsible for this warranty. The Contractor's written warranty shall be as outlined in attached WARRANTY FOR STRUCTURAL STANDING SEAM METAL ROOF (SSSMR) SYSTEM, and shall start upon final acceptance of the facility. It is required that the Contractor provide a separate bond in an amount equal to the installed total roofing system cost in favor of the owner (Government) covering the Contractor's warranty responsibilities effective throughout the five year Contractor's warranty period for the entire SSSMR system as outlined above.

1.7.2 Manufacturer's Material Warranties.

The Contractor shall furnish, in writing, the following manufacturer's material warranties which cover all SSSMR system components such as roof panels, anchor clips and fasteners, flashing, accessories, and trim, fabricated from coil material:

a. A manufacturer's 20 year material warranty warranting that the aluminum, zinc-coated steel, aluminum-zinc alloy coated steel or aluminum-coated steel as specified herein will not rupture, structurally fail, fracture, deteriorate, or become perforated under normal design atmospheric conditions and service design loads. Liability under this warranty shall be limited exclusively to the cost of either repairing or replacing nonconforming, ruptured, perforated, or structurally failed coil material.

b. A manufacturer's 20 year exterior material finish warranty on the factory colored finish warranting that the finish, under normal atmospheric conditions at the site, will not crack, peel, or delaminate; chalk in excess of a numerical rating of eight, as determined by ASTM D 4214 test procedures; or change color in excess of five CIE or Hunter Lab color difference (delta E) units in accordance with ASTM D 2244. Liability under this warranty is exclusively limited to refinishing with an air-drying version of the specified finish or replacing the defective coated material.

c. A roofing system manufacturer's 20 year system weathertightness warranty.

PART 2 PRODUCTS

2.1 ROOF PANELS

Panels shall be steel or aluminum and shall have a factory color finish. Length of sheets shall be sufficient to cover the entire length of any unbroken roof slope for slope lengths that do not exceed 9 m. (30 feet). When length of run exceeds 9 m (30 feet) and panel laps are provided, each sheet in the run shall extend over three or more supports. Width of sheets shall provide not more than 600 mm (24 inches) of coverage in place. SSSMR system with roofing panels greater than 300 mm (12 inches) in width shall have standing seams rolled during installation by an electrically driven seaming machine. Height of standing seams shall be not less than 51 mm (2 inches).

2.1.1 Steel Panels

Steel panels shall be zinc-coated steel conforming to ASTM A 653; aluminum-zinc alloy coated steel conforming to ASTM A 792, AZ 55 coating; or aluminum-coated steel conforming to ASTM A 463, Type 2, coating designation T2 65. Uncoated panels shall be 0.6 mm (0.0239 inch) thick minimum. Panels shall be within 95 percent of tested thickness. Prior to shipment, mill finish panels shall be treated with a passivating chemical to inhibit the formation of oxide corrosion products. Panels that have become wet during shipment and have started to oxidize shall be rejected.

2.1.2 Aluminum Panels

Alloy conforming to ASTM B 209, temper as required for the forming operation, minimum 0.8 mm (0.032 inch) thick.

2.2 CONCEALED ANCHOR CLIPS

Concealed anchor clips shall be the same as the tested roofing system. Clip bases shall have factory punched or drilled holes for attachment. Clips shall be made from multiple pieces with the

allowance for the total thermal movement required to take place within the clip. Single piece clips may be acceptable when the manufacturer can substantiate that the system can accommodate the thermal cyclic movement under sustained live or snow loads.

2.3 ACCESSORIES

Roof ridge, coping, trim, metal closure strips, caps and similar metal accessories shall be the manufacturer's standard products. Exposed metal accessories shall be finished to match the panels furnished. Molded closure strips shall be bituminous-saturated fiber, closed-cell or solid-cell synthetic rubber or neoprene, or polyvinyl chloride premolded to match configuration of the panels and shall not absorb or retain water. Die cast metal closures shall be installed with double bead tape sealant and fasteners that stitch the panel to a 2 mm (16 gage) preformed backer plate to ensure a positive compression of the tape sealant. The use of a continuous angle butted to the panel ends to form a closure will not be allowed.

2.4 FASTENERS

Fasteners for steel roof panels shall be zinc-coated steel, aluminum, corrosion resisting steel, or nylon capped steel, type and size specified below or as otherwise approved for the applicable requirements. Fasteners for aluminum roof panels shall be aluminum or corrosion resisting steel. Fasteners for structural connections shall provide both tensile and shear ultimate strengths of not less than 3340 N (750 pounds) per fastener. Fasteners for accessories shall be the manufacturer's standard. Exposed roof fasteners shall be sealed or have sealed washers on the exterior side of the roof to waterproof the fastener penetration. Washer material shall be compatible with the roofing; have a minimum diameter of 10 mm (3/8 inch) for structural connections; and gasketed portion of fasteners or washers shall be neoprene or other equally durable elastomeric material approximately 3 mm (1/8 inch) thick. Exposed fasteners for factory color finished panels shall be factory finished to match the color of the panels.

2.4.1 Screws

Screws for attaching anchor devices shall be not less than No. 14. Actual screw pull out test results shall be performed for the actual material gage and yield strength of the structural purlins or subpurlins to which the clip is to be anchored/attached. Other screws shall be as recommended by the manufacturer to meet the strength design requirements of the panels.

2.4.2 Bolts

Bolts shall be not less than 6 mm (1/4 inch) diameter, shouldered or plain shank as required, with locking washers and nuts.

2.4.3 Structural Blind Fasteners

Blind screw-type expandable fasteners shall be not less than 6 mm (1/4 inch) diameter. Blind (pop) rivets shall be not less than 7 mm (9/32 inch) minimum diameter.

2.5 SUBPURLINS

Cold formed supporting structural members/subpurlins shall have a minimum thickness of 1.5 mm (0.059 inches) and a minimum tensile yield strength of 345 MPa. (50000 psi.) Hot rolled structural members shall have a minimum thickness of 6 mm (0.25 inches) and a minimum tensile yield strength of 248 MPa. (36000 psi). Subpurlins shall be galvanized or given one coat of shop paint.

2.6 FACTORY COLOR FINISH

Panels shall have a factory applied polyvinylidene fluoride finish on the exposed side. The exterior finish shall consist of a baked-on topcoat with an appropriate prime coat. Color shall match the color indicated on the drawings. The exterior coating shall be a nominal 0.050 mm (2 mil) thickness consisting of a topcoat of not less than 0.018 mm (0.7 mil) dry film thickness and the paint manufacturer's recommended primer of not less than 0.025 mm (1.0 mil) thickness. The interior color finish shall consist of the same coating and dry film thickness as the exterior. The exterior color finish shall meet the test requirements specified below.

2.6.1 Salt Spray Test

A sample of the sheets shall withstand a salt spray test for a minimum of 1000 hours in accordance with ASTM B 117, including the scribe requirement in the test. Immediately upon removal of the panel from the test, the coating shall receive a rating of 10, no blistering, as determined by ASTM D 714; and a rating of 8, 1 mm (1/32 inch) failure at scribe, as determined by ASTM D 1654.

2.6.2 Formability Test

When subjected to testing in accordance with ASTM D 522 Method B, 3 mm (1/8 inch) diameter mandrel, the coating film shall show no evidence of cracking to the naked eye.

2.6.3 Accelerated Weathering, Chalking Resistance and Color Change

A sample of the sheets shall be tested in accordance with ASTM D 4587, test condition B for 1000 total hours. The coating shall withstand the weathering test without cracking, peeling, blistering, loss of adhesion of the protective coating, or corrosion of the base metal. Protective coating that can be readily removed from the base metal with tape in accordance with ASTM D 3359, Test Method B, shall be considered as an area indicating loss of adhesion. Following the accelerated weathering test, the coating shall have a chalk rating not less than No. 8 in accordance with ASTM D 4214 test procedures, and the color change shall not exceed 5 CIE or Hunter Lab color difference (delta E) units in accordance with ASTM D 2244. For sheets required to have a low gloss finish, the chalk rating shall be not less than No. 6 and the color difference shall be not greater than 7 units.

2.6.4 Humidity Test

When subjected to a humidity cabinet test in accordance with ASTM D 2247 for 1000 hours, a scored panel shall show no signs of blistering, cracking, creepage or corrosion.

2.6.5 Impact Resistance

Factory-painted sheet shall withstand direct and reverse impact in accordance with ASTM D 2794 13 mm 0.500 inch diameter hemispherical head indenter, equal to 6.7 times the metal thickness in mm, expressed in Newton-meters, 1.5 times the metal thickness in mils, expressed in inch-pounds, with no loss of adhesion.

2.6.6 Abrasion Resistance Test

When subjected to the falling sand test in accordance with ASTM D 968, Method A, the coating system shall withstand a minimum of 80 liters of sand before the appearance of the base metal. The term "appearance of base metal" refers to the metallic coating on steel or the aluminum base metal.

2.6.7 Specular Gloss

Finished roof surfaces shall have a specular gloss value of 30 plus or minus at 60 degrees when measured in accordance with ASTM D 523.

2.6.8 Pollution Resistance

Coating shall show no visual effects when covered spot tested in a 10 percent hydrochloric acid solution for 24 hours in accordance with ASTM D 1308.

2.7 INSULATION

Thermal resistance of insulation shall be not less than the R-values shown on the contract drawings. R-values shall be determined at a mean temperature of 24 degrees C (75 degrees F) in accordance with ASTM C 518. Insulation shall be a standard product with the insulation manufacturer, factory marked or identified with insulation manufacturer's name or trademark and R-value. Identification shall be on individual pieces or individual packages.

2.7.1 Polyisocyanurate Rigid Board Insulation for Use Above a Roof Deck

Polyisocyanurate insulation shall conform to ASTM C 1289, Type II, Class 1 (having a minimum recovered material content of 9 percent by weight of core material in the polyisocyanurate portion). For polyisocyanurate the maximum design R-value per 25 mm (1 inch) of insulation used shall be 1.27. Facings shall be non-asphaltic, glass fiber reinforced.

2.8 INSULATION RETAINERS

Insulation retainers shall be type, size, and design necessary to adequately hold the insulation and to provide a neat appearance. Metallic retaining members shall be nonferrous or have a nonferrous coating. Nonmetallic retaining members, including adhesives used in conjunction with mechanical retainers or at insulation seams, shall have a fire resistance classification not less than that permitted for the insulation.

2.9 SEALANT

Sealants shall be elastomeric type containing no oil or asphalt. Exposed sealant shall be colored to match the applicable building color and shall cure to a rubberlike consistency. Sealant placed in the roof panel standing seam ribs shall be provided in accordance with the manufacturer's recommendations.

2.10 GASKETS AND INSULATING COMPOUNDS

Gaskets and insulating compounds shall be nonabsorptive and suitable for insulating contact points of incompatible materials. Insulating compounds shall be nonrunning after drying.

2.11 EPDM RUBBER BOOTS

Flashing devices around pipe penetrations shall be flexible, one-piece devices molded from weather-resistant EPDM rubber. Rubber boot material shall be as recommended by the manufacturer. The boots shall have base rings made of aluminum or corrosion resisting steel that conform to the contours of the roof panel to form a weather-tight seal.

PART 3 EXECUTION

3.1 INSTALLATION

Installation shall be in accordance with the manufacturer's erection instructions and drawings. Dissimilar materials which are not compatible when contacting each other shall be insulated by means of gaskets or insulating compounds. Molded closure strips shall be installed wherever roofing sheets terminate in open-end configurations, exclusive of flashings. The closure strip installation shall be weather-tight and sealed. Screws shall be installed with a clutching screw gun, to assure screws are not stripped. Field test shall be conducted on each gun prior to starting installation and periodically thereafter to assure it is adjusted properly to install particular type and size of screw as recommended by manufacturer's literature. Improper or mislocated drill holes shall be plugged with an oversize screw fastener and gasketed washer; however, sheets with an excess of such holes or with such holes in critical locations shall not be used. Exposed surfaces and edges shall be kept clean and free from sealant, metal cuttings, hazardous burrs, and other foreign material. Stained, discolored, or damaged sheets shall be removed from the site.

3.1.1 Field Forming of Panels

When roofing panels are formed from factory-color-finished steel coils at the project site, the same care and quality control measures that are taken in shop forming of roofing panels shall be observed. Rollformer shall be operated by the metal roofing manufacturer's representative. In cold weather conditions, preheating of the steel coils to be field formed shall be performed as necessary just prior to the rolling operations.

3.1.2 Subpurlins

Unless otherwise shown, subpurlins shall be anchored to the purlins or other structural framing members with bolts or screws. Attachment to the substrate (when provided) or to the panels is not permitted. The subpurlin spacing shall not exceed 750 mm (30 inches) on centers at the corner,

edge and ridge zones, and 1500 mm (5 foot) maximum on centers for the remainder of the roof. Corner, edge, and ridge zones are as defined in ASCE 7.

3.1.3 Roof Panel Installation

Roof panels shall be installed with the standing seams in the direction of the roof slope. The side seam connections for installed panels shall be completed at the end of each day's work. Method of applying joint sealant shall conform to the manufacturer's recommendation to achieve a complete weather-tight installation. End laps of panels shall be provided in accordance with the manufacturer's instructions. Closures, flashings, EPDM rubber boots, roof curbs, and related accessories shall be installed according to the manufacturer's drawings. Fasteners shall not puncture roofing sheets except as provided for in the manufacturer's instructions for erection and installation. Expansion joints for the standing seam roof system shall be installed at locations indicated on the contract drawings and other locations indicated on the manufacturer's drawings.

3.1.4 Concealed Anchor Clips

Concealed anchor clips shall be fastened directly to the structural framing members. Attachment to the substrate (when provided) or to the panels is not permitted. The maximum distance, parallel to the seams, between clips shall be 750 mm (30 inches) on center at the corner, edge, and ridge zones, and 1500 mm (5 feet) maximum on centers for the remainder of the roof.

3.2 INSULATION INSTALLATION

Insulation shall be continuous over entire roof surface. Where expansion joints, terminations, and other connections are made, the cavity shall be filled with batt insulation with vapor retarder providing equivalent R-value and perm rating as remaining insulation. Insulation shall be installed as indicated and in accordance with manufacturer's instructions.

3.3 CLEANING AND TOUCH-UP

Exposed SSSMR systems shall be cleaned at completion of installation. Debris that could cause discoloration and harm to the panels, flashings, closures and other accessories shall be removed. Grease and oil films, excess sealants, and handling marks shall be removed and the work shall be scrubbed clean. Exposed metal surfaces shall be free of dents, creases, waves, scratch marks, and solder or weld marks. Immediately upon detection, abraded or corroded spots on shop-painted surfaces shall be wire brushed and touched up with the same material used for the shop coat. Factory color finished surfaces shall be touched up with the manufacturer's recommended touch up paint.

CONTRACTOR'S FIVE (5) YEAR NO PENAL SUM WARRANTY
FOR STRUCTURAL STANDING SEAM METAL ROOF (SSSMR) SYSTEM

PROJECT DESCRIPTION AND LOCATION (Include Bldg. no.):_____ CORPS OF ENGINEERS CONTRACT NUMBER:_____ SPECIFICATION SECTION NUMBER & DESCRIPTION: 07416 STRUCTURAL STANDING SEAM METAL ROOF (SSSMR) SYSTEM

_____

CONTRACTOR:_____
ADDRESS:_____ POINT OF CONTACT:_____
TELEPHONE NUMBER:_____

OWNER:_____
ADDRESS:_____
POINT OF CONTACT:_____
TELEPHONE NUMBER:_____

CONSTRUCTION AGENT:_____
ADDRESS:_____
POINT OF CONTACT:_____
TELEPHONE NUMBER:_____

THE SSSMR SYSTEM INSTALLED ON THE ABOVE NAMED BUILDING IS WARRANTED BY _____ FOR A PERIOD OF FIVE (5) YEARS AGAINST WORKMANSHIP AND MATERIAL DEFICIENCIES, WIND DAMAGE, STRUCTURAL FAILURE AND LEAKAGE. THE SSSMR SYSTEM COVERED UNDER THIS WARRANTY SHALL INCLUDE THE ENTIRE ROOFING SYSTEM, INCLUDING THE STANDING SEAM METAL ROOF PANELS, PANEL FINISHES, ROOFING SECUREMENT COMPONENTS, ALL ACCESSORIES, COMPONENTS, AND TRIM; INCLUDING PENETRATIONS SUCH VENTS, CURBS, SKYLIGHTS; INTERIOR OR EXTERIOR GUTTERS AND DOWNSPOUTS; EAVES, RIDGE, HIP, VALLEY, RAKE, GABLE, WALL, OR OTHER ROOF SYSTEM FLASHINGS INSTALLED TO PROVIDE A WEATHERTIGHT ROOF SYSTEM; AND ITEMS SPECIFIED IN OTHER SECTIONS OF THE SPECIFICATIONS THAT ARE PART OF THE SSSMR SYSTEM. ALL LEAKS SHALL BE REPAIRED AS APPROVED BY THE CONTRACTING OFFICER. THIS WARRANTY SHALL COVER THE ENTIRE COST OF REPAIR OR REPLACEMENT, INCLUDING ALL MATERIAL, LABOR, AND RELATED MARKUPS. THE ABOVE REFERENCED WARRANTY COMMENCED ON THE DATE OF FINAL ACCEPTANCE ON _____ AND WILL REMAIN IN EFFECT FOR STATED DURATION FROM THIS DATE.

SIGNED, DATED, AND NOTARIZED (BY COMPANY PRESIDENT)

_____

(Company President) (Date)

(SEE REVERSE SIDE FOR SUPPLEMENTAL PROVISIONS AND EXCLUSIONS)

CONTRACTOR'S FIVE (5) YEAR NO PENAL SUM WARRANTY
FOR STRUCTURAL STANDING SEAM METAL ROOF (SSSMR) SYSTEM
(continued)

THE CONTRACTOR MAY SUPPLEMENT THIS WARRANTY WITH WRITTEN WARRANTIES FROM THE INSTALLER AND/OR MANUFACTURER OF THE SSSMR SYSTEM, WHICH SHALL BE SUBMITTED ALONG WITH THE CONTRACTOR'S WARRANTY. HOWEVER, THE CONTRACTOR WILL BE ULTIMATELY RESPONSIBLE FOR THE WARRANTY AS OUTLINED IN THE
SPECIFICATIONS AND AS INDICATED IN THIS WARRANTY EXAMPLE.

EXCLUSIONS FROM COVERAGE

1. NATURAL DISASTERS, ACTS OF GOD (LIGHTING, FIRE, EXPLOSIONS, SUSTAINED WIND FORCES IN EXCESS OF THE DESIGN CRITERIA, EARTHQUAKES, AND HAIL).

2. ACTS OF NEGLIGENCE OR ABUSE OR MISUSE BY GOVERNMENT OR OTHER PERSONNEL, INCLUDING ACCIDENTS, VANDALISM, CIVIL DISOBEDIENCE, WAR, OR DAMAGE CAUSED BY FALLING OBJECTS.

3. DAMAGE BY STRUCTURAL FAILURE, SETTLEMENT, MOVEMENT, DISTORTION, WARPAGE, OR DISPLACEMENT OF THE BUILDING STRUCTURE OR ALTERATIONS MADE TO THE BUILDING.

4. CORROSION CAUSED BY EXPOSURE TO CORROSIVE CHEMICALS, ASH OR FUMES GENERATED OR RELEASED INSIDE OR OUTSIDE THE BUILDING FROM CHEMICAL PLANTS, FOUNDRIES, PLATING WORKS, KILNS, FERTILIZER FACTORIES, PAPER PLANTS, AND THE LIKE.

5. FAILURE OF ANY PART OF THE SSSMR SYSTEM DUE TO ACTIONS BY THE OWNER TO INHIBIT FREE DRAINAGE FROM THE ROOF AND ALLOW PONDING WATER. CONTRACTOR'S DESIGN SHALL INSURE FREE DRAINAGE FROM THE ROOF AND NOT ALLOW PONDING WATER.

6. THIS WARRANTY APPLIES TO THE STRUCTURAL STANDING SEAM METAL ROOF (SSSMR) SYSTEM. IT DOES NOT INCLUDE ANY CONSEQUENTIAL DAMAGE TO THE BUILDING INTERIOR OR CONTENTS WHICH IS COVERED BY THE WARRANTY OF CONSTRUCTION CLAUSE INCLUDED IN THIS CONTRACT.

7. THIS WARRANTY CANNOT BE TRANSFERRED TO ANOTHER OWNER WITHOUT WRITTEN CONSENT OF THE CONTRACTOR AND THIS WARRANTY AND THE CONTRACT PROVISIONS WILL TAKE PRECEDENCE OVER ANY CONFLICTS WITH STATE STATUTES, UNLESS OTHERWISE APPROVED IN WRITING BY THE CONTRACTING OFFICER.

LEAKS SHALL BE RESPONDED TO WITHIN 48 HOURS OF RECEIPT OF NOTICE BY TELEPHONE OR IN WRITING FROM EITHER THE OWNER, OR CONTRACTING

OFFICER. EMERGENCY REPAIRS, TO PREVENT FURTHER ROOF LEAKS, SHALL BE INITIATED IMMEDIATELY; A WRITTEN PLAN SHALL BE SUBMITTED FOR APPROVAL TO REPAIR OR REPLACE THIS SSSMR SYSTEM WITHIN SEVEN CALENDAR DAYS. ACTUAL WORK FOR PERMANENT REPAIRS OR REPLACEMENT SHALL BE STARTED WITHIN 30 DAYS AFTER RECEIPT OF NOTICE, AND COMPLETED WITHIN A REASONABLE TIME FRAME. IF THE CONTRACTOR FAILS TO ADEQUATELY RESPOND TO THE WARRANTY PROVISIONS, AS STATED IN THE CONTRACT AND AS CONTAINED HEREIN, THE CONTRACTING OFFICER MAY HAVE THE SSSMR SYSTEM REPAIRED OR REPAIRED BY OTHERS AND CHARGE THE COST TO THE CONTRACTOR.

A FRAMED COPY OF THIS WARRANTY SHALL BE POSTED IN THE MECHANICAL ROOM OR OTHER APPROVED LOCATION DURING THE ENTIRE WARRANTY PERIOD.

END OF SECTION

SECTION 07600

SHEET METALWORK, GENERAL

PART 1 GENERAL

1.1 REFERENCES

The publications listed below form a part of this specification to the extent referenced. The publications are referred to in the text by basic designation only.

AMERICAN SOCIETY FOR TESTING AND MATERIALS (ASTM)

ASTM A 167	(1996) Stainless and Heat-Resisting Chromium-Nickel Steel Plate, Sheet, and Strip
ASTM B 32	(1996) Solder Metal
ASTM D 226	(1997) Asphalt-Saturated Organic Felt Used in Roofing and Waterproofing
ASTM D 543	(1995) Evaluating the Resistance of Plastics to Chemical Reagents
ASTM D 822	(1996) Conducting Tests on Paint and Related Coatings and Materials Using Filtered Open-Flame Carbon-Arc Exposure Apparatus
ASTM D 828	(1993) Tensile Properties of Paper and Paperboard Using Constant-Rate-of-Elongation-Apparatus
ASTM D 1784	(1996) Rigid Poly(Vinyl Chloride) (PVC) Compounds and Chlorinated Poly(Vinyl Chloride) (CPVC) Compounds
ASTM D 2822	(1991; R 1997) Asphalt Roof Cement
ASTM D 3656	(1994) Insect Screening and Louver Cloth Woven from Vinyl-Coated Glass Yarns
ASTM D 4022	(1994) Coal Tar Roof Cement, Asbestos Containing
ASTM D 4586	(1993) Asphalt Roof Cement, Asbestos Free
ASTM E 96	1995) Water Vapor Transmission of Materials

INSECT SCREENING WEAVERS ASSOCIATION (ISWA)

ISWA IWS 089	(1990) Recommended Standards and Specifications for Insect Wire Screening (Wire Fabric)

SHEET METAL AND AIR CONDITIONING CONTRACTORS NATIONAL ASSOCIATION (SMACNA)

SMACNA-02 (1993; Errata) Architectural Sheet Metal Manual

1.2 GENERAL REQUIREMENTS

Sheet metalwork shall be accomplished to form weathertight construction without waves, warps, buckles, fastening stresses or distortion, and shall allow for expansion and contraction.

1.2.1 Coordination

Cutting, fitting, drilling, and other operations in connection with sheet metal required to accommodate the work of other trades shall be performed by sheet metal mechanics. Installation of sheet metal items used in conjunction with roofing shall be coordinated with roofing work to permit continuous roofing operations. Sheet metalwork pertaining to heating, ventilating, and air conditioning is specified in Division 15.

1.3 SUBMITTALS

Government approval is required for submittals with a "GA" designation; submittals having an "FIO" designation are for information only. The following shall be submitted in accordance with Section 01330 SUBMITTAL PROCEDURES:

SD-04 Drawings

Materials; FIO.

Drawings of sheet metal items showing weights, gauges or thicknesses; types of materials; expansion-joint spacing; fabrication details; and installation procedures.

1.4 DELIVERY, STORAGE, AND HANDLING

Materials shall be adequately packaged and protected during shipment and shall be inspected for damage, dampness, and wet-storage stains upon delivery to the jobsite. Materials shall be clearly labeled as to type and manufacturer. Sheet metal items shall be carefully handled to avoid damage. Materials shall be stored in dry, ventilated areas until immediately before installation.

PART 2 PRODUCTS

2.1 MATERIALS

Lead, lead-coated metal shall not be used. Any metal listed by SMACNA-02 for a particular item may be used, unless otherwise specified or indicated. Materials shall conform to the requirements specified below and to the thicknesses and configurations established in SMACNA-02. Different items need not be of the same metal, except that if copper is selected for any exposed item, all exposed items shall be copper.

2.1.1 Accessories

Accessories and other items essential to complete the sheet metal installation, though not specifically indicated or specified, shall be provided.

2.1.2 Aluminum Extrusions

ASTM B 221, Alloy 6063, Temper T5.

2.1.3 Bituminous Cement

Type I asphalt cement conforming to ASTM D 2822 or ASTM D 4586. For coal tar roofing; coal tar cement conforming to ASTM D 4022.

2.1.4 Sealant

Unless otherwise specified, sealant shall be an elastomeric weather resistant sealant as specified in Section 07900 JOINT SEALING.

2.1.5 Fasteners

Fasteners shall be compatible with the fastened material and shall be the type best suited for the application.

2.1.6 Felt

ASTM D 226, Type I.

2.1.7 Polyvinyl Chloride (PVC) Reglets

ASTM D 1784, Class 14333D, 1.9 mm (0.075 inch) minimum thickness.

2.1.8 Aluminum Alloy Sheet and Plate

ASTM B 209, form, alloy, and temper appropriate for use.

2.1.9 Copper

ASTM B 370, Temper H 00.

2.1.10 Stainless Steel

ASTM A 167, Type 302 or 304; fully annealed, dead soft temper.

2.1.11 Solder

ASTM B 32, 95-5 tin-antimony.

2.1.12 Through-Wall Flashing

a. Electro-sheet copper not less than 0.14 kg (5 ounces), factory coated both sides with acid- and alkali-resistant bituminous compound not less than 1.8 kg per square meter (6 ounces per square foot) or factory covered both sides with asphalt-saturated cotton fabric, asphalt saturated glass-fiber fabric, or with 18 kg (40 pound) reinforced kraft paper bonded with asphalt.

b. Stainless steel, Type 304, not less than 0.08 mm (0.003 inch) thick, completely encased by and permanently bonded on both sides to 23 kg (50 pound) high strength bituminized crepe kraft paper, using hot asphalt, heat, and pressure.

c. Nonreinforced, waterproof, impermeable extruded elastomeric single ply sheeting not less than 0.76 mm (30 mils) thick.

d. 0.09 kg Three ounce copper sheet, with 0.05 mm (2 mils) of dense, clear, polyethylene sheet bonded to each side of the copper.

e. Other through-wall flashing material may be used provided the following performance criteria are met.

(1) No cracking or flaking when bent 180 degrees over a 0.8 mm (1/32 inch) mandrel and rebent at the same point over the same mandrel in an opposite direction at 0 degree C (32 degrees F).

(2) Water vapor permeability not more than 115 ng per Pa per second per square meter (2 perms) when tested in accordance with ASTM E 96.

(3) Minimum breaking strength of 24 kgf/15 mm (90 pounds per inch) width in the weakest direction when tested in accordance with ASTM D 828.

(4) No visible deterioration after being subjected to a 400-hour direct weathering test in accordance with ASTM D 822.

(5) No shrinkage in length or width and less than 5 percent loss of breaking strength after a 10-day immersion, per ASTM D 543, in 5 percent (by weight) solutions, respectively, of sulfuric acid, hydrochloric acid, sodium hydroxide or saturated lime (calcium hydroxide).

2.1.13 Louver Screen

Type III aluminum alloy insect screening conforming to ISWA IWS 089.

2.1.14 Louvers

As required in Section 10200.

PART 3 EXECUTION

3.1 GENERAL

Items such as gutters, downspouts and louvers shall be fabricated in conformance with SMACNA-02 and as indicated. Unless otherwise specified or indicated, exposed edges shall be folded back to form a 12.7 mm (1/2 inch) hem on the concealed side, and bottom edges of exposed vertical surfaces shall be angled to form drips. Bituminous cement shall not be placed in contact with roofing membranes other than built-up roofing.

3.2 EXPANSION JOINTS

Expansion joints shall be provided as specified in SMACNA-02. Expansion joints in continuous sheet metal shall be provided at 12 192 mm (40 foot) intervals for copper and stainless steel and at 9 753.6 mm (32 foot) intervals for aluminum. Joints shall be evenly spaced. An additional joint shall be provided where the distance between the last expansion joint and the end of the continuous run is more than half the required interval spacing.

3.3 PROTECTION OF ALUMINUM

Aluminum shall not be used where it will be in contact with copper or where it will contact water which flows over copper surfaces. Aluminum that will be in contact with wet or pressure-treated wood, mortar, concrete, masonry, or ferrous metals shall be protected against galvanic or corrosive action by one of the following methods:

3.3.1 Paint

Aluminum surfaces shall be solvent cleaned and given one coat of zinc-molybdate primer and one coat of aluminum paint as specified in Section 09900 PAINTING, GENERAL.

3.3.2 Nonabsorptive Tape or Gasket

Nonabsorptive tape or gasket shall be placed between the adjoining surfaces and cemented to the aluminum surface using a cement compatible with aluminum.

3.4 CONNECTIONS AND JOINTING

3.4.1 Soldering

Soldering shall apply to copper, and stainless steel items. Edges of sheet metal shall be pretinned before soldering is begun. Soldering shall be done slowly with well heated soldering irons so as to thoroughly heat the seams and completely sweat the solder through the full width of the seam. Edges of stainless steel to be pretinned shall be treated with soldering acid flux. Soldering shall follow immediately after application of the flux. Upon completion of soldering, the acid flux residue shall be thoroughly cleaned from the sheet metal with a water solution of washing soda and rinsed with clean water.

3.4.2 Riveting

Joints in aluminum sheets 1.1 mm (0.040 inch) or less in thickness shall be mechanically made.

3.4.3 Seaming

Flat-lock and soldered-lap seams shall finish not less than 25.4 mm (1 inch) wide. Unsoldered plain-lap seams shall lap not less than 76.2 mm (3 inches) unless otherwise specified. Flat seams shall be made in the direction of the flow.

3.5 CLEATS

A continuous cleat shall be provided where indicated or specified to secure loose edges of the sheet metalwork. Butt joints of cleats shall be spaced approximately 3.175 mm (1/8 inch) apart. The cleat shall be fastened to supporting wood construction with nails evenly spaced not over 304.8 mm (12 inches) on centers. Where the fastening is to be made to concrete or masonry, screws shall be used and shall be driven in expansion shields set in concrete or masonry.

3.6 GUTTERS AND DOWNSPOUTS

Gutters and downspouts shall be installed as indicated. Gutters shall be supported as indicated. Downspouts shall be rigidly attached to the building. Supports for downspouts shall be spaced according to manufacturer's recommendations.

3.7 FLASHINGS

Flashings shall be installed at locations indicated and as specified below. Sealing shall be according to the flashing manufacturer's recommendations. Flashings shall be installed at intersections of roof with vertical surfaces and at projections through roof, except that flashing for heating and plumbing, including piping, roof, and floor drains, and for electrical conduit projections through roof or walls are specified in other sections. Except as otherwise indicated, counter flashings shall be provided over base flashings. Perforations in flashings made by masonry anchors shall be covered up by an application of bituminous plastic cement at the perforation. Flashing shall be installed on top of joint reinforcement. Flashing shall be formed to direct water to the outside of the system.

3.7.1 Base Flashing

Metal base flashing shall be coordinated with roofing work. Metal base flashing shall be set in plastic bituminous cement over the roofing membrane, nailed to nailing strip, and secured in place on the roof side with nails spaced not more than 3 inches on centers. Metal base flashing shall not be used on built-up roofing.

3.7.2 Counter Flashings

Except as otherwise indicated, counter flashings shall be provided over base flashings. Counter flashing shall be installed as shown on the drawings. Where bituminous base flashings are provided, the counter flashing shall extend down as close as practicable to the top of the cant strip. Counter flashing shall be factory formed to provide spring action against the base flashing.

3.7.3 Stepped Flashing

Stepped flashing shall be installed where sloping roofs surfaced with shingles abut vertical surfaces. Separate pieces of base flashing shall be placed in alternate shingle courses.

3.7.4 Through-Wall Flashing

Through-wall flashing includes sill, lintel, and spandrel flashing. The flashing shall be laid with a layer of mortar above and below the flashing so that the total thickness of the two layers of the mortar and flashing are the same thickness as the regular mortar joints. Flashing shall not extend further into the masonry backup wall than the first mortar joint. Joints in flashing shall be lapped and sealed. Flashing shall be one piece for lintels and sills.

3.7.4.1 Lintel Flashing

Lintel flashing shall extend the full length of lintel. Flashing shall extend through the wall one masonry course above the lintels and shall be bent down over the vertical leg of the outer steel lintel angle not less than 50.8 (2 inches), or shall be applied over top of masonry and precast concrete lintels. Bed joints of lintels at control joints shall be underlaid with sheet metal bond breaker.

3.7.4.2 Sill Flashing

Sill flashing shall extend the full width of the sill and not less than 101.6 mm (4 inches) beyond ends of sill except at control joint where the flashing shall be terminated at the end of the sill.

3.7.5 Valley Flashing

Valley flashing shall be installed as specified in SMACNA-02 and as indicated.

3.8 GRAVEL STOPS AND FASCIA

Gravel stops and fascia shall be fabricated and installed as indicated and in accordance with SMACNA-02.

3.9 INSTALLATION OF LOUVERS

Louvers shall be rigidly attached to the supporting construction. The installation shall be rain-tight. Louver screen shall be installed as indicated.

3.10 REGLETS

Reglets shall be a factory fabricated product of proven design, complete with fittings and special shapes as required. Open-type reglets shall be filled with fiberboard or other suitable separator to prevent crushing of the slot during installation. Reglet plugs shall be spaced not over 304.8 mm (12 inches) on centers and reglet grooves shall be filled with sealant. Friction or slot-type reglets shall have metal flashings inserted the full depth of slot and shall be lightly punched every

304.8 mm (12 inches) to crimp the reglet and counter flashing together. Polyvinyl chloride reglets shall be sealed with the manufacturer's recommended sealant.

3.11 CONTRACTOR QUALITY CONTROL

The Contractor shall establish and maintain a quality control procedure for sheet metal used in conjunction with roofing to assure compliance of the installed sheet metalwork with the contract requirements. Any work found not to be in compliance with the contract shall be promptly removed and replaced or corrected in an approved manner. Quality control shall include, but not be limited to, the following:

a. Observation of environmental conditions; number and skill level of sheet metal workers; condition of substrate.

b. Verification of compliance of materials before, during, and after installation.

c. Inspection of sheet metalwork for proper size and thickness, fastening and joining, and proper installation.

The actual quality control observations and inspections shall be documented and a copy of the documentation furnished to the Contracting Officer at the end of each day.

END OF SECTION

SECTION 07625

COPPER SHEET METAL FLASHING

1 PART 1 GENERAL

1.1 REFERENCES

The publications listed below form a part of this specification to the extent referenced. The publications are referred to in the text by basic designation only.

AMERICAN SOCIETY FOR TESTING AND MATERIALS (ASTM)

ASTM B 32	(1996) Solder Metal
ASTM B 152	(1994) Copper Sheet, Strip, Plate, and Rolled Bar
ASTM B 370	(1992) Copper Sheet and Strip for Building Construction
ASTM C 1136	(1995) Flexible, Low Permeance Vapor Retarders for Thermal Insulation
ASTM D 226	(1997) Asphalt-Saturated Organic Felt Used in Roofing and Waterproofing
ASTM F 547	(1977; R 1990) Definitions of Terms Relating to Nails for Use with Wood and Wood-Base Materials
ASTM D 2822	(1991) Asphalt Roof Cement

COMMERCIAL ITEM DESCRIPTIONS (CID)

CID A-A-51145	(Rev C) Flux, Soldering, Non-Electronic, Paste and Liquid

SHEET METAL AND AIR CONDITIONING CONTRACTORS NATIONAL ASSOCIATION (SMACNA)

SMACNA-02	(1993; Errata) Architectural Sheet Metal Manual

1.2 GENERAL REQUIREMENTS

Sheet metalwork shall be accomplished to form weathertight construction. Work shall be installed without waves, warps, buckles, fastening stresses or distortion and shall allow for expansion and contraction. Cutting, fitting, drilling, and other operations in connection with sheet metal required to accommodate the work of other trades shall be performed by sheet metal mechanics. Exposed edges shall be hemmed. Bottom edges of exposed vertical surfaces shall be angled to form drips. Flashing at the end of a run shall be formed into a 3-dimensional configuration to direct water to the outside

of the system. Weights and thicknesses of copper flashing shall be as specified in TABLE 1. Joints shall be installed as specified in TABLE 2. Accessories and other items essential to complete the sheet metal installation, though not specifically indicated or specified, shall be provided. Installation of sheet metal items used in conjunction with roofing shall be coordinated with roofing work to permit continuous roofing operations. Factory-fabricated components shall be packed in cartons marked with the manufacturer's name or trademark printed or embossed at frequent intervals to permit easy identification. Sheet metalwork pertaining to heating, ventilating, and air conditioning is specified in other sections.

1.3 SUBMITTALS

Government approval is required for submittals with a "GA" designation; submittals having an "FIO" designation are for information only. The following shall be submitted in accordance with Section 01330 SUBMITTAL PROCEDURES:

SD-04 Drawings

Sheet Metal; FIO.

Drawings showing weights, gauges, or thickness of sheet metal; type of material; joining, expansion-joint spacing, and fabrication details; and installation procedures. Materials shall not be delivered to the site until after the approved detail drawings have been returned to the Contractor.

SD-14 Samples

Materials; FIO.

Samples of materials proposed for use, upon request.

SD-08 Statements
Contractor Quality Control; GA.

Quality Assurance Plan, including a checklist of points to be observed, prior to start of roofing work.

1.4 DELIVERY, STORAGE, AND HANDLING

Materials shall be adequately packaged and protected during shipment and shall be inspected for damage, dampness, and wet-storage stains upon delivery to the jobsite. Materials shall be clearly labeled as to type and manufacturer. Sheet metal items shall be carefully handled to avoid damage. Materials shall be stored in dry, weathertight, ventilated areas until installation.

2 PART 2 PRODUCTS

2.1 MATERIALS

Materials shall conform to the requirements specified below, and those given in TABLE 1. Materials exposed to weather shall be copper.

2.1.1 Bituminous Cement

ASTM D 2822, Type I.

2.1.2 Fasteners

Materials shall conform to TABLE 1. Nails shall conform to ASTM F 547 or be as approved. Nails and rivets shall be copper. Screws and bolts shall be bronze. Fasteners shall be the best type for the application.

2.1.3 Felt

ASTM D 226, Type II.

2.1.4 Flux

CID A-A-51145, Type I.

2.1.5 Slip Sheet

Building paper meeting the requirements of ASTM C 1136, Type IV, style optional.

2.1.6 Sheet Metal

ASTM B 152, ASTM B 370, Light cold-rolled temper (H00) copper.

2.1.7 Solder

ASTM B 32 Sn50.

2.2 SEALANTS AND SEALING COMPOUNDS

Sealants and sealing compounds are specified in Section 07900 JOINT SEALING.

3 PART 3 EXECUTION

3.1 GALVANIC ACTION

Galvanic action between copper and iron or steel shall be avoided by the use of proper insulation. The copper shall be insulated by the following: covering the steel member with insulation; placing strips of sheet lead between the two metals; or by heavily tinning the iron.

3.2 SOLDERING AND SEAMING

3.2.1 Soldering

Edges of sheet metals, except lead coated material shall be pretinned before soldering is begun. Soldering shall be done slowly with well heated soldering irons to thoroughly heat the seams and completely sweat the solder through the full width of the seam. Edges of lead coated material to be soldered shall be scraped or wire-brushed to produce a bright surface, and seams shall have a liberal amount of flux brushed in before soldering is begun. Soldering shall follow immediately after application of the flux. Upon completion of soldering, the acid flux residue shall be thoroughly

cleaned from the sheet metal with a solution of washing soda in water and rinsed with clean water.

3.2.2 Seams

Flat-lock and soldered-lap seams shall finish not less than 25 mm 1 inch wide. Unsoldered plain-lap seams shall lap not less than 75 mm 3 inches unless otherwise specified. Flat seams shall be made in the direction of the flow.

3.3 COVERING ON MINOR FLAT, PITCHED, OR CURVED SURFACES

Unless otherwise indicated, minor flat, pitched, or curved surfaces, such as crickets, bulkheads, dormers, and small decks, shall be covered or flashed with 450 x 600 mm (18 x 24 inch) metal sheets and shall be secured with cleats. One ply of felt covered with 1 ply of slip sheet shall be applied as underlayment on wood surfaces. Two cleats shall be placed on the long side and 1 cleat shall be placed on the short side. Seams shall be locked and soldered.

3.4 CLEATS

A continuous cleat shall be provided where indicated or specified to secure loose edges of the sheet metalwork. Butt joints shall be spaced approximately 3 mm (1/8 inch) apart. The cleat shall be fastened to the supporting construction with nails evenly spaced not over 300 mm (12 inches) on centers. Where the fastening is to be made to concrete or masonry, screws shall be used and shall be driven in expansion shields set in concrete or masonry. The cleat for fascia anchorage shall be installed to extend below the supporting construction to form a drip and to allow the flashing to be hooked over the lower edge at least 20 mm (3/4 inch). The cleat shall be of sufficient width to provide adequate bearing area to ensure a rigid installation. Where horizontal nailer is vented for insulation and the cleat is placed over masonry or concrete, the cleat shall be installed over 1.6 mm (1/16 inch) thick metal washers placed at screws. Washers shall be of metal that is electrolytically compatible with the continuous cleat.

3.5 SEISMIC JOINT COVERS

Seismic joint covers shall be provided as indicated on the drawings. Materials other than copper shall be premolded to provide an integral expansion joint capable of allowing movement on all directions and providing a weather seal to the structure.

3.6 FLASHINGS

3.6.1 General

Flashings shall be installed at intersections of roof with vertical surfaces and at projections through roof, except that flashing for heating and plumbing, including piping, roof, and floor drains, and for electrical conduit projections through roof or walls is covered in appropriate sections for such work. Cap flashings shall be turned around exterior corners of masonry or concrete walls at least 50 mm 2 inches, shall be secured into masonry joints and into concrete with expansion anchors and shall be sealed with No. 2 or 4 sealing compound. Corner units shall have mitered joints,

shall be installed with 75 mm 3 inch lap joint over flashings on each side. Unless otherwise indicated, through-wall flashing shall be terminated 13 mm 1/2 inch inside each exposed face of the wall. Cap flashings shall be provided over base flashings. Perforations in flashings made by masonry anchors shall be covered up by an application of bituminous plastic cement at the perforation. Exposed and unfastened flashings shall have the edge of the strip turned under 13 mm 1/2 inch. Flashing shall be installed on top of joint reinforcement.

3.6.2 Stepped Flashing

Stepped flashing shall be installed where sloping roofs surfaced with tiles abut vertical surfaces. Separate pieces of base flashing shall be placed in alternate tile courses. Each piece of base flashing shall extend out onto the roof at least 100 mm (4 inches) and shall be nailed to the deck. The stepped base flashing shall extend up along the wall not less than 100 mm (4 inches) and stop beneath the cap flashing or shall be anchored beneath wood siding in frame construction. Cap flashings shall be set in a reglet into masonry and concrete construction, and cap flashing shall lap over the flashing below not less than 75 mm (3 inches). The stepped base flashing at vertical joints between the sections shall be lapped not less than 75 mm (3 inches).

3.6.3 Valley Flashing

Valley flashing shall be free from longitudinal seams and shall be of a width sufficient to extend not less than 150 mm (6 inches) under the roof covering on each side. The sheets shall lap not less than 200 mm (8 inches) in the direction of flow and shall be secured to roofing construction with cleats on each side. Cleats shall be spaced not more than 600 mm (24 inches) on centers. The copper sheet shall not be punctured with nails at any place.

3.7 REGLETS

Reglets shall be a factory fabricated product, complete with fittings and special shapes as may be required. Open-type reglets shall be filled with fiberboard or other suitable separator to prevent crushing of the slot during installation. Reglets shall be located not less than 200 mm (8 inches) nor more than 400 mm (16 inches) above roofing not having cant strips or shall be located not less than 125 mm (5 inches) nor more than 325 mm (13 inches) above cant strip. Reglet plugs shall be spaced not over 300 mm (12 inches) on centers and reglet grooves shall be filled with sealant. Friction or slot-type reglets shall have metal flashings inserted the full depth of slot and shall be lightly punched every 300 mm (12 inches) to crimp the reglet and cap flashing together.

3.8 DOWNSPOUTS

Downspouts shall be set plumb and not less than 25 mm (1 inch) from the wall. Leaders shall connect gutters on overhanging eaves to downspouts. Leaders shall be set with a slope not less than 0.3 degrees, 5 mm per m (1/16 inch per foot) or more than 30 degrees below a horizontal line. Leaders shall fit over the outlet tube in gutter bottom and shall fit into and be riveted to the downspout. Rivet spacing shall be not more than 50 mm. (2 inches). Strainers shall be set loosely in the eave tube opening in gutter. Joints between lengths of downspouts shall be made by

telescoping the end of the upper lengths at least 20 mm (3/4 inch) into the lower length. Downspouts terminating in drainage lines shall be neatly fitted into downspout boots and the joint filled with a portland cement mortar cap sloped away from downspout. Downspouts terminating at splash blocks or splash pans shall be provided with stock elbow-type fittings. Downspout hangers shall be provided adjacent to the joint at the top of each section of downspout, except that the bottom section shall have an additional strap adjacent to the bottom joint when splash blocks or splash pans are required. Hangers shall be 1.5 x 25 mm (1/16 x 1 inch) flat stock of the same material as the downspout.

3.9 GUTTERS

Gutters shall terminate at least 13 mm (1/2 inch) away from vertical surfaces. [Supporting cleats shall be anchored to the structure at spacings not exceeding 400 mm. (16 inches).] [Gutter brackets and spacers shall be fastened to roof nailer by screws or deformed shank-type nails and shall interlock with or be fastened to the leading edge of gutter. Gutter spacers shall be 1.5 x 25 mm (1/16 x 1 inch) flat-stock of the same material as the gutter. Brackets and spacers shall be alternated at not more than 900 mm (36 inches on centers).] Gutters shall be hung with high points at ends or equidistant from downspouts and shall [be level] [have a slope of not less than 0.3 degrees 5 mm per m. (1/16 inch per foot).] Provide an enlarged gutter box at each downspout location as indicated on the drawings.

3.10 CONTRACTOR QUALITY CONTROL

The Contractor shall establish and maintain a quality control procedure for sheet metal used in conjunction with roofing to assure compliance of the installed sheet metalwork with the contract requirements. Any work found not to be in compliance with the contract shall be promptly removed and replaced or corrected in an approved manner. Quality control shall include, but not be limited to, the following:

a. Observation of environmental conditions; number and skill level of sheet metal workers; condition of substrate.

b. Verification of compliance of materials before, during, and after installation.

c. Inspection of sheet metalwork, for proper size and thickness, fastening and joining, and proper installation.

The actual quality control observations and inspections shall be documented and a copy of the documentation furnished to the Contracting Officer at the end of each day.

TABLE 1 - COPPER SHEET METAL WEIGHTS AND THICKNESSES

Item Description	Copper, kilogram per square meter (foot)
Building expansion joints:	
Cap	4.9 (16)
Waterstop -	

bellows or flanged-U-type	4.9 (16)
Covering on minor flat, pitched or curved surfaces	6.1 (20)
Downspouts, heads and leaders	4.9 (16)
Flashings:	
Base	6.1 (20)
Cap, stepped or valley	4.9 (16)
Gutters (girth):	
Up to 380 mm	4.9 (16)
380 to 510 mm	4.9 (16)
510 to 635 mm	6.1 (20)
635 to 760 mm	7.3 (24)
Gutter brackets (girth):	
Up to 380 mm	3 x 25 mm (1/8 x 1 inch)
380 to 510 mm	6 x 25 mm (1/4 x 1 inch)
510 to 610 mm	6 x 38 mm (1/4 x 1 1/2 inch)
Gutter cleats and cover plates	4.9 (16)
Reglets(1)	3.1 (10)

TABLE 2 - COPPER SHEET METAL JOINTS

Item Designation	Type of Joint
Building expansion joint at roof	32 mm (1-1/4 inch) single lock standing seam, cleated.
Flashings:	
Stepped	75 mm (3 inch) lap.
Valley	150 mm (6 inch) lap, cleated.
Gutters	38 mm (1 1/2 inch) lap, riveted and soldered.
Reglets	Butt joint.

This page intentionally blank

SECTION 07840

FIRESTOPPING

PART 1 GENERAL

1.1 REFERENCES

The publications listed below form a part of this specification to the extent referenced. The publications are referred to in the text by basic designation only.

AMERICAN SOCIETY FOR TESTING AND MATERIALS (ASTM)

ASTM E 84	(1996a) Surface Burning Characteristics of Building Materials
ASTM E 119	(1995a) Fire Tests of Building Construction and Materials
ASTM E 814	(1994b) Fire Tests of Through-Penetration Fire Stops

UNDERWRITERS LABORATORIES (UL)

UL 723	(1996) Test for Surface Burning Characteristics of Building Materials
UL 1479	(1994; Rev thru Jul 1997) Fire Tests of Through-Penetration Firestops
UL 2079	(1997) Tests for Fire Resistance of Building Joint Systems
UL Fire Resist Dir	(1997) Fire Resistance Directory

1.2 SUBMITTALS

Government approval is required for submittals with a "GA" designation; submittals having an "FIO" designation are for information only. The following shall be submitted in accordance with Section 01330 SUBMITTAL PROCEDURES:

SD-04 Drawings

Firestopping Materials; FIO.

Detail drawings including manufacturer's descriptive data, typical details, installation instructions and the fire-test data and/or report as appropriate for the fire resistance rated construction and location. Submittal shall indicate the firestopping material to be provided for each type of application. When more than 5 penetrations or construction joints are to receive firestopping, drawings shall indicate location and type of application.

SD-13 Certificates

Firestopping Materials; FIO.

Certificates attesting that firestopping material complies with the specified requirements. The label or listing of the Underwriters Laboratories will be acceptable evidence. In lieu of the label or listing, a written certificate may be submitted from an approved, nationally recognized testing agency equipped to perform such services, stating that the items have been tested and conform to the specified requirements and testing methods.

Installer Qualifications; FIO.

Documentation of training and experience.

Inspection; FIO.

Manufacturer's representative certification stating that firestopping work has been inspected and found to be applied according to the manufacturer's recommendations and the specified requirements.

1.3 GENERAL REQUIREMENTS

Firestopping shall consist of furnishing and installing a material or a combination of materials to form an effective barrier against the spread of flame, smoke and gases, and maintain the integrity of fire resistance rated walls, partitions, floors, and ceiling-floor assemblies, including through-penetrations and construction joints. Through-penetrations include the annular space around pipes, tubes, conduit, wires, cables and vents. Construction joints include those used to accommodate expansion, contraction, wind, or seismic movement; firestopping material shall not interfere with the required movement of the joint. Gaps requiring firestopping include gaps between the curtain wall and the floor slab and between the top of the fire-rated walls and the roof deck.

1.4 STORAGE AND DELIVERY

Materials shall be delivered in the original unopened packages or containers showing name of the manufacturer and the brand name. Materials shall be stored off the ground and shall be protected from damage and exposure to elements. Damaged or deteriorated materials shall be removed from the site.

1.5 INSTALLER QUALIFICATIONS

Installer of firestopping material shall be trained by the manufacturer or the manufacturer's representative, and shall have a minimum of 3 years experience in the installation of firestopping of the type specified.

PART 2 PRODUCTS

2.1 FIRESTOPPING MATERIALS

Firestopping materials shall consist of commercially manufactured products complying with the following minimum requirements:

2.1.1 Fire Hazard Classification

Material shall have a flame spread of 25 or less, and a smoke developed rating of 50 or less, when tested in accordance with ASTM E 84 or UL 723. Material shall be an approved firestopping material as listed in UL Fire Resist Dir or by a nationally recognized testing laboratory.

2.1.2 Toxicity

Material shall be nontoxic to humans at all stages of application.

2.1.3 Fire Resistance Rating

Firestopping will not be required to have a greater fire resistance rating than that of the assembly in which it is being placed.

2.1.3.1 Through-Penetrations

Firestopping materials for through-penetrations, as described in paragraph GENERAL REQUIREMENTS, shall provide "F" and "T" fire resistance ratings in accordance with ASTM E 814 or UL 1479, except that T Ratings are not required for penetrations smaller than or equal to a 100 mm 4 inch nominal pipe or 0.01 square meter (16 square inches) in overall cross sectional area. Fire resistance ratings shall be the following:

a. Penetrations of Fire Resistance Rated Walls and Partitions: F Rating = one hour, T Rating = one hour.

b. Penetrations of Fire Resistance Rated Floors and Ceiling-Floor Assemblies: F Rating = one hour, T Rating = one hour.

2.1.3.2 Construction Joints and Gaps

Fire resistance ratings of construction joints, as described in paragraph GENERAL REQUIREMENTS, and gaps such as those between floor slabs or roof decks and curtain walls shall be the same as the construction in which they occur. Construction joints and gaps shall be provided with firestopping materials and systems that have been tested per ASTM E 119 or UL 2079 to meet the required fire resistance rating.

PART 3 EXECUTION

3.1 PREPARATION

Areas to receive firestopping shall be free of dirt, grease, oil, or loose materials which may affect the fitting or fire resistance of the firestopping system.

3.2 INSTALLATION

Firestopping material shall completely fill void spaces regardless of geometric configuration, subject to tolerance established by the manufacturer. Firestopping for filling floor voids 100 mm (4 inches) or more in any direction shall be capable of supporting the same load as the floor is designed to support or shall be protected by a permanent barrier to prevent loading or traffic in the firestopped area.

Firestopping shall be installed in accordance with manufacturer's written instructions. Firestopping shall be provided in the following locations, except in floor slabs on grade:

a. Penetrations of duct, conduit, tubing, cable and pipe through floors and through fire-resistance rated walls, partitions, and ceiling-floor assemblies.

b. Penetrations of vertical shafts such as pipe chases, elevator shafts, and utility chutes.

c. Gaps at the intersection of floor slabs and curtain walls, including inside of hollow curtain walls at the floor slab.

d. Gaps at perimeter of fire-resistance rated walls and partitions, such as between the top of the walls and the bottom of roof decks.

e. Construction joints in floors and fire rated walls and partitions.

f. Other locations where required to maintain fire resistance rating of the construction.

3.3 INSPECTION

Firestopped areas shall not be covered or enclosed until inspection is complete and approved. A manufacturer's representative shall inspect the applications initially to ensure adequate preparations (clean surfaces suitable for application, etc.) and periodically during the work to assure that the completed work has been accomplished according to the manufacturer's written instructions and the specified requirements.

END OF SECTION

SECTION 07900

JOINT SEALING

PART 1 GENERAL

1.1 REFERENCES

The publications listed below form a part of this specification to the extent referenced. The publications are referred to in the text by basic designation only.

AMERICAN SOCIETY FOR TESTING AND MATERIALS (ASTM)

ASTM C 734	(1993) Low-Temperature Flexibility of Latex Sealants After Artificial Weathering
ASTM C 834	(1991) Latex Sealants
ASTM C 919	(1984, Rev 1992) Use of Sealants in Acoustical Applications
ASTM C 920	(1987) Elastomeric Joint Sealants
ASTM C 1083	(1991, Rev. 1995) Water Absorption of Cellular Elastomeric Gaskets and Sealing Materials
ASTM C 1085	(1991) Butyl Rubber-Based Solvent-Release Sealants
ASTM C 1193	(1991) Use of Joint Sealants
ASTM D 217	(1994) Cone Penetration of Lubricating Grease
ASTM D 1056	(1991) Flexible Cellular Materials - Sponge or Expanded Rubber
ASTM D 1623	(1978, Rev. 1995) Tensile and Tensile Adhesion Properties of Rigid Cellular Plastics
ASTM E 84	(1994) Surface Burning Characteristics of Building Materials

AMERICAN ARCHITECTURAL MANUFACTURERS ASSOCIATION (AAMA)

AAMA 808-3	(1992; Section of Specification 800-92) Exterior Perimeter Sealing Compound

FEDERAL SPECIFICATIONS (FS)

FS TT-S-00230	(Rev C; Am 2) Sealing Compound: Elastomeric Type, Single Component (For Calking, Sealing, and Glazing in Buildings and Other Structures)

1.2 SUBMITTALS

Government approval is required for submittals with a "GA" designation; submittals having an "FIO" designation are for information only. The following shall be submitted in accordance with Section 01330 SUBMITTAL PROCEDURES:

Data

Backing; FIO.

Bond-Breaker; FIO.

Sealant; GA.

Manufacturer's descriptive data including storage requirements, shelf life, curing time, instructions for mixing and application, and primer data (if required). A copy of the Material Safety Data Sheet shall be provided for each solvent, primer or sealant material.

Certificates

Sealant; FIO.

Certificates of compliance stating that the materials conform to the specified requirements.

1.3 ENVIRONMENTAL REQUIREMENTS

The ambient temperature shall be within the limits of 4 to 32 degrees C when the sealants are applied.

1.4 DELIVERY AND STORAGE

Materials shall be delivered to the job in the manufacturer's original unopened containers. The container label or accompanying data sheet shall include the following information as applicable: manufacturer, name of material, formula or specification number, lot number, color, date of manufacture, mixing instructions, shelf life, and curing time at the standard conditions for laboratory tests. Materials shall be handled and stored to prevent inclusion of foreign materials. Materials shall be stored at temperatures between 4 and 32 degrees C unless otherwise specified by the manufacturer.

PART 2 PRODUCTS

2.1 JOINT SEALANT BACKING

2.1.1 General

Provide sealant backings of material and type that are nonstaining; are compatible with joint substrates, sealants, primers and other joint fillers; and are approved for applications indicated by sealant manufacturer based on field experience and laboratory testing.

2.1.2 Plastic Foam Joint Fillers

Preformed, compressible, resilient, nonstaining nonwaxing, nonextruding strips of flexible plastic foam of material indicated below and of size, shape, and density to control sealant depth and otherwise contribute to producing optimum sealant performance.

- Closed-cell polyethylene foam, nonabsorbent to liquid water and gas, nonoutgassing in unruptured state.

- Proprietary, reticulated, closed-cell polymeric foam, nonoutgassing, with a density of 40 kg/m^3 and tensile strength of 241 kPa per ASTM D 1623, and with water absorption less than 0.02 gms/cc per ASTM C 1083..

2.1.3 Elastomeric Tubing Joint Fillers

Neoprene, butyl, EPDM, or silicone tubing complying with ASTM D 1056, nonabsorbent to water and gas, capable of remaining resilient at temperatures down to -32 degrees C. Provide products with low compression set and of size and shape to provide a secondary seal, to control sealant depth, and otherwise contribute to optimum sealant performance.

2.1.4 Bond-Breaker Tape

Polyethylene tape or other plastic tape as recommended by sealant manufacturer for preventing sealant from adhering to rigid, inflexible joint filler materials or joint surfaces at back of joint where such adhesion would result in sealant failure. Provide self-adhesive tape where applicable.

2.2 MISCELLANEOUS MATERIALS

2.2.1 Primer

Material recommended by joint sealant manufacturer where required for adhesion of sealant to joint substrates indicated, as determined from preconstruction joint sealant-substrate tests and field tests.

2.2.2 Cleaners for Nonporous Surfaces

Chemical cleaners acceptable to manufacturers of sealants and sealant backing materials, free of oily residues or other substances capable of staining or harming in any way joint substrates and adjacent nonporous surfaces, and formulated to promote optimum adhesion of sealants with joint substrates.

2.2.3 Masking Tape

Nonstaining, nonabsorbent material compatible with joint sealants and surfaces adjacent to joints.

2.3 LATEX SEALANT

Latex Sealant, shall be ASTM C 834.

2.4 ELASTOMERIC JOINT SEALANT

2.4.1 Elastomeric Sealant Standard

Provide manufacturer's standard chemically curing elastomeric sealants that comply with ASTM C 920 and other requirements indicated on each Elastomeric Joint Sealant Data Sheet at end of this Section, including those requirements referencing ASTM C 920 Classifications for Type, Grade, Class, and Uses.

2.5 SOLVENT-RELEASE-CURING JOINT SEALANTS

2.5.1 Acrylic Sealant

Manufacturer's standard one-part, nonsag, solvent-release-curing acrylic terpolymer sealant complying with AAMA 808.3 or FS TT-S-00230 or both, with capability when tested for adhesion and cohesion under maximum cyclic movement per ASTM C 719, to withstand the following percentage change in joint width existing at time of application and remain adhered to joint substrates indicated for project without failing cohesively:

- 12½ percent movement in both extension and compression for a total of 25 percent.

2.5.2 Butyl Sealant

Manufacturer's standard on-part, nonsag, solvent-release-curing, polymerized butyl sealant complying with ASTM C 10-85 and formulated with minimum of 75 percent solids to be less nonstaining, paintable, and have a tack-free time of 24 hours or less.

2.6 ACOUSTICAL SEALANT

Rubber or polymer-based acoustical sealant E shall have a flame spread of 25 or less and a smoke developed rating of 50 or less when tested in accordance with ASTM E 84. Acoustical sealant shall have a consistency of 250 to 310 when tested in accordance with ASTM D 217, and shall remain flexible and adhesive after 500 hours of accelerated weathering as specified in ASTM C 734, and shall be non-staining.

2.7 SOLVENTS AND CLEANING AGENTS

Solvents, cleaning agents, and accessory materials shall be provided as recommended by the manufacturer.

PART 3 EXECUTION

3.1 EXAMINATION

Examine joints indicated to receive joint sealants, with Installer present, for compliance with requirements for joint configuration, installation tolerances, and other conditions affecting joint sealant performance. Do not proceed with installation of joint sealants until unsatisfactory conditions have been corrected.

3.2 PREPARATION

3.2.1 Surface Cleaning of Joints

Clean out joints immediately before installing joint sealants to comply with recommendations of joint sealant manufacturer and the following requirements:

- Remove all foreign material from joint substrates that could interfere with adhesion of joint sealant, including dust, paints (except for permanent, protective coatings tested and approved for sealant adhesion and compatibility by sealant manufacturer), old joint sealants, oil, grease, waterproofing, water repellents, water, surface dirt, and frost.

- Clean concrete, masonry, unglazed surfaces of ceramic tile, and similar porous joint substrate surfaces by brushing, grinding, blast cleaning, mechanical abrading, or a combination of these methods to produce a clean, sound substrate capable of developing optimum bond with joint sealants. Remove loose particles remaining from above cleaning operations by vacuuming or blowing out joints with oil-free compressed air.

- Remove laitance and form release agents from concrete.

- Clean metal, glass, porcelain enamel, glazed surfaces of ceramic tile, and other nonporous surfaces with chemical cleaners or other means that do not stain, harm substrates, or leave residues capable of interfering with adhesion of joint sealants.

3.2.2 Joint Priming

Prime concrete masonry units or other porous joint substrates as recommended by joint sealant manufacturer based on preconstruction joint sealant-substrate tests or prior experience. Apply primer to comply with joint sealant manufacturer's recommendations. Confine primers to areas of joint sealant bond; do not allow spillage or migration onto adjoining surfaces.

3.2.3 Masking Tape

Use masking tape where required to prevent contact of sealant with adjoining surfaces that otherwise would be permanently stained or damaged by such contact or by cleaning methods required to remove sealant smears. Masking tape shall not damage the finish of the surface(s) to which it is applied. Remove tape immediately after tooling without disturbing joint seal.

3.3 INSTALLATION OF JOINT SEALANTS

3.3.1 General

Comply with joint sealant manufacturer's printed installation instructions applicable to products and applications indicated, except where more stringent requirements apply.

3.3.2 Sealant Installation Standard

Comply with recommendations of ASTM C 1193 for use of joint sealants as applicable to materials, applications, and conditions indicated.

3.3.3 Acoustical Sealant Application Standard

Comply with recommendations of ASTM C 919 for use of joint sealants in acoustical applications as applicable to materials, applications, and conditions indicated.

3.3.4 Installation of Sealant Backings

Install sealant backings to comply with the following requirements:

a. Install joint fillers of type indicated to provide support of sealants during application and at position required to produce the cross-sectional shapes and depths of installed sealants relative to joint widths that allow optimum sealant movement capability.

- Do not leave gaps between ends of joint fillers.
- Do not stretch, twist, puncture, or tear joint fillers.
- Remove absorbent joint fillers that have become wet prior to sealant application and replace with dry material.

b. Install bond breaker tape between sealants where backer rods are not used between sealants and joint fillers or back of joints.

3.5 Installation of Sealants

Install sealants by proven techniques that result in sealants directly contracting and fully wetting joint substrates, completely filling recesses provided for each joint configuration, and providing uniform, cross-sectional shapes and depths relative to joint widths that allow optimum sealant movement capability. Install sealants at the same time sealant backings are installed. Sealant shall be used before expiration of shelf life. Multi-component sealants shall be mixed according to manufacturer's printed instructions. Sealant in guns shall be applied with a nozzle of proper size to fit the width of joint. Joints shall be sealed as detailed in the drawings. Sealant shall be forced into joints with sufficient pressure to expel air and fill the groove solidly. Sealant shall be installed to the indicated depth without displacing the backing. Unless otherwise indicated, specified, or recommended by the manufacturer, the installed sealant shall be tooled so that the surface is uniformly smooth and free of wrinkles and to assure full adhesion to the sides of the joint. Sealants shall be installed free of air pickets, foreign embedded matter, ridges and sags. Sealer shall be applied over the sealant when and as specified by the sealant manufacturer.

3.3.6 Tooling of Nonsag Sealants

Immediately after sealant application and prior to time skinning or curing begins, tool sealants to form smooth, uniform beads of configuration indicated, to eliminate air pockets, and to ensure contact and adhesion of sealant with sides of joint. Remove excess sealants from surfaces adjacent to joint. Do not use tooling agents that discolor sealants or adjacent surfaces are not approved by sealant manufacturer.

3.3.6.1 Provide concave joint configuration per Figure 5A in ASTM C 1193, unless otherwise indicated.

3.3.6.2 Provide flush joint configuration, per Figure 5B in ASTM C 1193, where indicated.

- Use masking tape to protect adjacent surfaces of recessed tooled joints.

3.3.6.3 Provide recessed joint configuration, per Figure 5C in ASTM C 1193, of recess depth and at locations indicated.

3.4 CLEANING

3.4.1 Clean off excess sealants or sealant smears adjacent to joints as work progresses by methods and with cleaning materials approved by manufacturers of joint sealants and of products in which joints occur.

3.5 PROTECTION

3.5.1 Protect joint sealants during and after curing period from contact with contaminating substances or from damage resulting from construction operations or other causes so that they are without deterioration or damage at time of Substantial completion. If, despite such protection, damage or deterioration occurs, cut out and remove damaged or deteriorated joint sealants and replace with new sealant immediately so that installations with repaired areas are indistinguishable from original work.

ELASTOMERIC JOINT SEALANT DATA SHEET No.1

Base Polymer: Urethane.

Type: S (single component).

Grade: NS (nonsag).

Class: 25

Uses Related to Exposure: T (traffic) and NT (nontraffic).

Uses Related to Joint Substrates: M, G, A, and, as applicable to joint substrates indicated, O, below.

Use O Joint Substrates: Color anodized aluminum, galvanized steel, brick and ceramic tile.

ELASTOMERIC JOINT SEALANT DATA SHEET No.2

Base Polymer: Urethane.

Type: S (single component).

Grade: P (pourable).

Class: 25

Uses Related to Exposure: T (traffic).

Uses Related to Joint Substrates: M, A, and, as applicable to joint substrates indicated, O, below.

Use O Joint Substrates: Color anodized aluminum, galvanized steel, brick and ceramic tile

ELASTOMERIC JOINT SEALANT DATA SHEET No.3

Base Polymer: Urethane.

Type: M (multicomponent).

Grade: NS (nonsag).

Class: 25

Uses Related to Exposure: T (traffic).

Uses Related to Joint Substrates: M, A, and, as applicable to joint substrates indicated, O, below.

Use O Joint Substrates: Color anodized aluminum, galvanized steel, brick, and ceramic tile.

NOTE: Explanation of abbreviations:

Classes: Withstand 25 or 12.5 percent joint movement.

USES: NT, No Traffic; T, Traffic; M, Mortar; G, General; A, Aluminum; and O, Other.

Use structural silicone sealant for supporting weight of glass or thin stone.

END OF SECTION

SECTION 08110

STEEL DOORS AND FRAMES

PART 1 GENERAL

1.1 REFERENCES

The publications listed below form a part of this specification to the extent referenced. The publications are referred to in the text by basic designation only.

AMERICAN SOCIETY FOR TESTING AND MATERIALS (ASTM)

ASTM C 236	(1989; R 1993) Steady-State Thermal Performance of Building Assemblies by Means of a Guarded Hot Box
ASTM C 976	(1990) Thermal Performance of Building Assemblies by Means of a Calibrated Hot Box
ASTM D 2863	(1991) Measuring the Minimum Oxygen Concentration to Support Candle-Like Combustion of Plastics (Oxygen Index)
ASTM E 283	(1991) Determining the Rate of Air Leakage Through Exterior Windows, Curtain Walls, and Doors Under Specified Pressure Differences Across the Specimen

DOOR AND HARDWARE INSTITUTE (DHI)

DHI A115.1G	(1994) Installation Guide for Doors and Hardware

NATIONAL ASSOCIATION OF ARCHITECTURAL METAL MANUFACTURERS (NAAMM)

NAAMM HMMA 862	(1987) Hollow Metal Manual; Section: Guide Specifications for Commercial Security Hollow Metal Doors and Frames

NATIONAL FIRE PROTECTION ASSOCIATION (NFPA)

NFPA 80	(1995) Fire Doors and Windows
NFPA 80A	(1993) Protection of Buildings from Exterior Fire Exposures
NFPA 101	(1997) Safety to Life from Fire in Buildings and Structures
NFPA 252	(1995) Fire Tests of Door Assemblies

STEEL DOOR INSTITUTE (SDOI)

SDOI SDI-100	(1991) Standard Steel Doors and Frames
SDOI SDI-106	(1996) Standard Door Type Nomenclature
SDOI SDI-107	(1984) Hardware on Steel Doors (Reinforcement - Application)

1.2 SUBMITTALS

Government approval is required for submittals with a "GA" designation; submittals having an "FIO" designation are for information only. The following shall be submitted in accordance with Section 01330 SUBMITTAL PROCEDURES:

SD-04 Drawings

Steel Doors and Frames; FIO.

Drawings using standard door type nomenclature in accordance with SDOI SDI-106 indicating the location of each door and frame, elevation of each model of door and frame, details of construction, method of assembling sections, location and extent of hardware reinforcement, hardware locations, type and location of anchors for frames, and thicknesses of metal. Drawings shall include catalog cuts or descriptive data for the doors, frames, and weather stripping including air infiltration data and manufacturers printed instructions.

SD-09 Reports

Fire Rated Doors; FIO.

A letter by a nationally recognized testing laboratory which identifies the product manufacturer, type, and model; certifying that the laboratory has tested a sample assembly in accordance with NFPA 252 and issued a current listing for same.

SD-13 Certificates

Thermal Insulated Doors; FIO.

SD-14 Samples

Steel Doors and Frames; FIO.

Manufacturer's standard color samples of factory applied finishes.

1.3 DELIVERY AND STORAGE

During shipment, welded unit type frames shall be strapped together in pairs with heads at opposite ends or shall be provided with temporary steel spreaders at the bottom of each frame; and knockdown type frames shall be securely strapped in bundles. Materials shall be delivered to the site in undamaged condition, and stored out of contact with the ground and under a weather tight covering permitting air circulation. Doors

and assembled frames shall be stored in an upright position in accordance with DHI A115.1G. Abraded, scarred, or rusty areas shall be cleaned and touched up with matching finishes.

1.4 WARRANTY

Manufacturer's standard performance guarantees or warranties that extend beyond a 1 year period shall be provided.

PART 2 PRODUCTS

2.1 DOORS AND FRAMES

Doors and frames shall be factory fabricated in accordance with SDOI SDI-100 and the additional requirements specified herein. Door grade shall be heavy duty (Grade II) for all otherwise unspecified interior doors and shall be extra heavy duty (Grade III) for all exterior doors and for the door to the door to the Communications Vault in the Administration Building. Exterior doors and frames shall be designation G60 galvanized. Indicated interior doors and frames shall be designation G60 galvanized. Doors and frames shall be prepared to receive hardware conforming to the templates and information provided under Section 08700 BUILDERS' HARDWARE. Doors and frames shall be reinforced, drilled, and tapped to receive mortised hinges, locks, latches, and flush bolts as required. Doors and frames shall be reinforced for surface applied hardware. Frames shall be welded type located as shown. Door frames shall be furnished with a minimum of three jamb anchors and one floor anchor per jamb. Anchors shall be not less than 1.2 mm (18 gauge) diameter wire for interior doors and 4.5 mm (7 gauge) diameter wire for exterior doors and the door for the Communications Closet in the Administration Building. For wall conditions that do not allow the use of a floor anchor, an additional jamb anchor shall be provided. Rubber silencers shall be furnished for installation into factory predrilled holes in door frames; adhesively applied silencers are not acceptable. Where frames are installed in plaster or masonry walls, plaster guards shall be provided on door frames at hinges and strikes. Full glass doors shall conform to SDOI SDI-100, Model 3, and shall include provisions for glazing. Reinforcing of door assemblies for closers and other required hardware shall be in accordance with SDOI SDI-100 and the conditions of the fire door assembly listing when applicable. Exterior doors shall have top edges closed flush and sealed against water penetration.

2.2 THERMAL INSULATED DOORS

The interior of thermal insulated doors shall be completely filled with rigid plastic foam permanently bonded to each face panel. The thermal conductance (U-value) through the door shall not exceed 2.33 W/sq m times K (0.41 btu/hr times sq f times f) when tested as an operational assembly in accordance with ASTM C 236 or ASTM C 976. Doors with cellular plastic cores shall have a minimum oxygen index rating of 22 percent when tested in accordance with ASTM D 2863. All exterior doors and the door to the Communications Closet in the Administration Building shall be insulated.

2.3 SECURITY TYPE DOORS

All exterior doors and the door into the Communications Closet in the Administration Building, in addition to being insulated, shall be security type doors. These doors and frames shall be factory fabricated in accordance with NAAMM HMMA 862 and the additional requirements specified herein. Doors and frames shall be galvanized 2.3 mm (12 gauge) steel plate on both sides, and be internally reinforced vertically with continuous 1.0 mm (20 gauge) steel stiffeners spaced 150 mm (6 inches) on center maximum. Doors shall be fully welded seamless construction with no visible seams or joints on their faces

or vertical edges. Door thickness shall be 44.5 mm (1-3/4 inches). At meeting stiles, an astragal shall be provided by extending the face panel of the active leaf not less than 16 mm (5/8 inch) across the gap between the two leaves. Astragal shall be flush with the face panel of the inactive leaf. Frame corners shall be machine-mitered, full (continuously) welded. All exposed welds shall be ground and finished smooth.

2.4 WEATHERSTRIPPING

Unless otherwise specified in Section 08700 BUILDERS' HARDWARE, weather stripping shall be as follows: Weather stripping for head and jamb shall be manufacturer's standard elastomeric type of synthetic rubber, vinyl, or neoprene and shall be installed at the factory. Weather stripping for bottom of doors shall be as shown. Air leakage rate of weather stripping shall not exceed 0.31 l/s per linear meter (0.20 cfm per linear foot) of crack when tested in accordance with ASTM E 283 at standard test conditions.

2.5 LOUVERS

Where indicated, doors shall be provided with louver sections. Louvers shall be sight proof type pierced into the panels of the door. Insect screens shall be a removable type with 18 by 16 mesh aluminum or bronze cloth.

2.6 GLAZING

Glazing shall be as specified in Section 08810 GLASS AND GLAZING. Removable glazing beads shall be screw-on or snap-on type.

2.7 FACTORY FINISH

Doors and frames shall be phosphatized , primed, and finished with an electrostatic baked on enamel or polyester base factory finish paint system. Color shall be in accordance with the Color Schedule on the drawings.

PART 3 EXECUTION

3.1 INSTALLATION

Installation shall be in accordance with DHI A115.1G. Preparation for surface applied hardware shall be in accordance with SDOI SDI-107. Rubber silencers shall be installed in door frames after finish painting has been completed; adhesively applied silencers are not acceptable. Weatherstripping shall be installed at exterior door openings to provide a weathertight installation. Installation and operational characteristics of fire doors shall be in accordance with NFPA 80, NFPA 80A and NFPA 101. Hollow metal door frames shall be solid grouted in masonry walls.

3.1.1 Thermal Insulated Doors

Hardware and perimeter seals shall be adjusted for proper operation. Doors shall be sealed weathertight after installation of hardware and shall be in accordance with Section 07920 JOINT SEALING.

3.1.2 Security Doors

Door frames shall be rigidly anchored in place and provided with anti spread space filler reinforcements to prevent disengagement of the lock bolt by prying or jacking of the frame. Jambs shall be filled solid with concrete grout.

3.2 FIELD PAINTED FINISH

Steel doors and frames shall be field painted in accordance with Section 09900 PAINTING, GENERAL. Weatherstrips shall be protected from paint. Finish shall be free of scratches or other blemishes. Color shall be as listed in the Color Schedule on the drawings.

END OF SECTION

This page intentionally blank

SECTION 08120

ALUMINUM DOORS AND FRAMES

1 PART 1 - GENERAL

1.1 REFERENCES

The publications listed below form a part of this specification to the extent referenced. The publications are referred to in the text by basic designation only.

ALUMINUM ASSOCIATION (AA)

AA DAF-45	(1980; R 1993) Designation System for Aluminum Finishes

AMERICAN ARCHITECTURAL MANUFACTURERS ASSOCIATION (AAMA)

AAMA 605.2	(1992) Voluntary Specification for High Performance Organic Coatings on Architectural Aluminum Extrusions and Panels
AAMA 1503.1	(1988) Voluntary Test Method for Thermal Transmittance and Condensation Resistance of Windows, Doors and Glazed Wall Sections

AMERICAN SOCIETY FOR TESTING AND MATERIALS (ASTM)

ASTM B 209	(1996) Aluminum and Aluminum-Alloy Sheet and Plate
ASTM B 221	(1996) Aluminum and Aluminum-Alloy Extruded Bars, Rods, Wire, Shapes, and Tubes
ASTM E 283	(1991) Determining the Rate of Air Leakage Through Exterior Windows, Curtain Walls, and Doors Under Specified Pressure Differences Across the Specimen
ASTM E 330	(1990) Structural Performance of Exterior Windows, Curtain Walls, and Doors by Uniform Static Air Pressure Difference

1.2 SYSTEM DESCRIPTION

Swing-type aluminum doors and frames, of size and design shown on the drawings, shall be provided at the locations indicated. Doors shall be furnished complete with frames, subframes, adjoining sidelights, trim, and other accessories indicated and specified.

1.3 PERFORMANCE REQUIREMENTS

1.3.1 Vertical Rail Rotational Performance

Full-glazed doors, except doors with top and bottom rails fastened together with tensioned tie rods, shall pass the following test:

The test section shall consist of an assembly of the top corner of the door. The side-rail section shall be 24 inches long and the top-rail section shall be 304.8 mm (12 inches) long. The top-rail section of doors having tie rods extending between stiles shall have blocking at the section cut to provide anchorage for the tie rod. The top-rail section shall be anchored to the test bench so that the corner protrudes far enough to allow clearance for deflection of the side rail. A lever arm capable of supporting 86.26 kg (190 pounds) shall be attached to the side-rail section at a point 482.6 mm (19 inches) from the inside edge of the top-rail. Position of the lever arm shall be parallel to the top-rail section. A weight support pad shall be attached to the lever arm at a point 19 inches from the inner edge of the side rail. The test section shall withstand a load of 59.02 kg (130 pounds) on the lever arm before reaching the point of failure. Failure is defined as a joint separation of 1.5875 mm (1/16 inch) during test loading or a vertical rail rotational displacement of 3-1/2 degrees during test loading.

1.3.2 Wind Load Performance

Doors shall be of sufficient strength to withstand a design wind load of 595.953 kg/square meter (25 pounds per square foot) of supported area with a deflection of not more than 1/175 times the length of the member. Doors shall be tested in accordance with ASTM E 330 at a pressure not less than 1.5 times the design load.

1.4 SUBMITTALS

Government approval is required for submittals with a "GA" designation; submittals having an "FIO" designation are for information only. The following shall be submitted in accordance with Section 01330 SUBMITTAL PROCEDURES:

SD-01 Data

Aluminum Doors and Frames; FIO.

Manufacturer's descriptive data and catalog cuts including air-infiltration data.

SD-04 Drawings

Aluminum Doors and Frames; GA.

A schedule showing the location of each door shall be included with the drawings. Drawings showing elevations of each door and frame type, details and method of anchorage, details of construction, location and installation of hardware, shape and thickness of materials, and details of joints and connections.

SD-06 Instructions

Installation; FIO. Cleaning; FIO.

Manufacturers installation instructions and cleaning instructions.

SD-09 Reports

Full-Glazed; FIO.

For full-glazed certified test reports stating that doors meet all test and specified requirements. Test shall be conducted by an independent testing laboratory within a period of 36 months preceding delivery of the doors to the site.

SD-14 Samples

Finishes; GA.

Samples of the color anodized coating, showing the extreme color range.

1.5 DELIVERY AND STORAGE

Materials delivered to the jobsite shall be inspected for damage, and shall be unloaded with a minimum of handling. Storage shall be in a dry location with adequate ventilation, free from dust, water, and other contaminants, and which permits easy access for inspecting and handling. Materials shall be neatly stored on the floor, properly stacked on nonabsorptive strips or wood platforms. Doors and frames shall not be covered with tarps, polyethylene film, or similar coverings.

1.6 WARRANTY

Manufacturer's standard performance guarantees or warranties that extend beyond a one-year period shall be provided.

2 PART 2 - PRODUCTS

2.1 ALUMINUM DOORS AND FRAMES

Extrusions shall comply with ASTM B 221, Alloy 6063-T5 except alloy used for anodized color coatings shall be required to produce the specified color. Aluminum sheets and strips shall comply with ASTM B 209, alloy and temper best suited for the purpose. Fasteners shall be hard aluminum or stainless steel.

2.1.1 Finishes

Finish shall be color anodized. Color anodized finish shall be AA-M10C22A42 in accordance with the requirements of AA DAF-45. Color shall be as indicated.

2.1.2 Welding and Fastening

Where possible, welds shall be located on unexposed surfaces. Welds required on exposed surfaces shall be smoothly dressed. Welding shall produce a uniform texture and color in the finished work, free of flux and spatter. Exposed screws or bolts will be permitted only at inconspicuous locations and shall have heads countersunk.

2.1.3 Anchors

Anchors shall be stainless steel or steel with a hot-dipped galvanized finish. Anchors of the sizes and shapes required shall be provided for securing aluminum frames to adjacent construction. Anchors shall be placed near top and bottom of each jamb and at intermediate points not more than 635 mm (25 inches) apart. Transom bars shall be anchored at ends, and mullions shall be anchored at head and sill. Vertical mullion reinforcement shall be of sufficient length to extend up to the overhead structural slab or framing and be securely attached thereto. The bottom of each frame shall be anchored to the rough floor construction with 2.38125 mm (3/32 inch) thick stainless steel angle clips secured to the back of each jamb and to floor construction. Stainless steel bolts and expansion rivets shall be used for fastening clip anchors. Freestanding door frames shall be reinforced and securely anchored to floor construction.

2.1.4 Provisions For Hardware

Hardware for aluminum doors is specified in Section 08700 BUILDERS' HARDWARE. Doors and frames shall be cut, reinforced, drilled, and tapped at the factory to receive template hardware. Reinforcement shall be provided in the core of doors as required to receive locks, door closers, and other hardware. Doors to receive surface applied hardware shall be reinforced as required.

2.1.5 Provisions For Glazing

Glazing shall be as specified in Section 08810 GLASS AND GLAZING. Metal glazing beads, vinyl inserts, and glazing gaskets shall be provided for securing glass. Glass stops shall be tamperproof on exterior side.

2.1.6 Weatherstripping

Weatherstripping shall be continuous silicone-treated wool pile type, or a type recommended by the door manufacturer, and shall be provided on head and jamb of exterior doors. Weatherstripping for bottom of doors shall be as shown. Weatherstripping shall be easily replaced without special tools, and shall be adjustable at meeting stiles of pairs of doors. Air leakage rate of weatherstripping shall not exceed 0.236 L/s (0.5 cubic feet per minute) per 304.8 mm (lineal foot) of crack when tested in accordance with ASTM E 283 at standard test conditions.

2.2 FABRICATION OF ALUMINUM FRAMES

Frames shall be double-glazed and shall have a minimum condensation resistance factor of 46 in accordance with AAMA 1503.1. Frames shall be fabricated of extruded aluminum shapes to contours as shown on the drawings. Shapes shown are representations of design, function, and required profile. Dimensions shown are minimum. Shapes of equivalent design may be submitted, subject to approval of samples. Minimum metal wall thickness shall be 0.090 inch, except glazing beads, moldings, and trim shall be not less than 0.050 inch. Frames that are to receive glass shall have removable snap-on glass stops and glazing beads. Joints in frame members shall be milled to a hairline watertight fit, reinforced, and secured mechanically by steel clip arrangement or by screw spline attachment.

2.3 FABRICATION OF ALUMINUM DOORS

2.3.1 Sizes, Clearances, and Edge Treatment

Doors shall be not less than 44.45 mm (1-3/4 inches) thick. Clearances shall be 1.5875 mm (1/16 inch) at hinge stiles, 3.17 mm (1/8 inch) at lock stiles and top rails, and 4.762 mm (3/16 inch) at floors and thresholds. Single-acting doors shall be beveled 3.17 mm (1/8 inch) at lock and meeting stile edges. Double-acting doors shall have rounded edges at hinge stile, lock stile, and meeting stile edges.

2.3.1.1 Full-Glazed Stile and Rail Doors

Doors shall have medium stiles and rails as shown, and shall be fabricated from extruded aluminum hollow seamless tubes or from a combination of open-shaped members interlocked or welded together. Doors shall be double-glazed and shall have a minimum condensation resistance factor of 46 in accordance with AAMA 1503.1. Top and bottom rail shall be fastened together by means of welding or by 9.525 mm (3/8 inch) diameter cadmium-plated tensioned steel tie rods. An adjustable mechanism shall be provided in the top rail of narrow stile doors to allow for minor clearance adjustments after installation. Extruded aluminum glazing beads shall be provided on interior side of doors. Extruded aluminum theft-proof snap-in glazing beads or fixed glazing beads shall be provided on exterior or security side of doors. Glazing beads shall have vinyl insert glazing gaskets, designed to receive glass of thickness required. Glass is specified in Section 08810 GLASS AND GLAZING.

3 PART 3 - EXECUTION

3.1 INSTALLATION OF DOORS, FRAMES, AND ACCESSORIES

3.1.1 Protection of Aluminum

Aluminum shall not be used where it will be in contact with copper or where it will contact water which flows over copper surfaces. Aluminum that will be in contact with wet or pressure-treated wood, mortar, concrete, masonry, or ferrous metals shall be protected against galvanic or corrosive action by one of the following methods.

3.1.1.1 Paint

Aluminum surfaces to be protected shall be solvent cleaned and given a coat of zinc-molybdate primer and one coat of aluminum paint.

3.1.1.2 Nonabsorptive Tape or Gasket

Nonabsorptive tape or gasket shall be placed between the adjoining surfaces and shall be cemented to the aluminum surface using a cement compatible with aluminum.

3.1.2 Installation

Frames and framing members shall be accurately set in position to receive doors, transoms, and adjoining sidelights. Frames shall be plumb, square, level, and in alignment, and securely anchored to adjacent construction. Metal-to-metal joints between framing members shall be sealed as specified in Section 07920 JOINT SEALING. Doors shall be accurately hung with proper clearances, and adjusted to operate properly. Protective coverings if provided shall be removed and the doors and frames shall be thoroughly cleaned.

END OF SECTION

SECTION 08330

OVERHEAD ROLLING DOOR

PART 1 GENERAL

1.1 REFERENCES

The publications listed below form a part of this specification to the extent referenced. The publications are referred to in the text by basic designation only.

AMERICAN SOCIETY FOR TESTING AND MATERIALS (ASTM)

ASTM A 653	(1994) Steel Sheet, Zinc-Coated (Galvanized) or Zinc-Iron Alloy-Coated (Galvannealed) by the Hot-Dip Process
ASTM E 84	(1995) Surface Burning Characteristics of Building Materials
ASTM E 330	(1990) Structural Performance of Exterior Windows, Curtain Walls, and Doors by Uniform Static Air Pressure Difference

AMERICAN SOCIETY OF HEATING, REFRIGERATING, AND AIR-CONDITIONING ENGINEERS (ASHRAE)

ASHRAE-81930	(1993) Handbook, Fundamentals I-P Edition

NATIONAL ELECTRICAL MANUFACTURERS ASSOCIATION (NEMA)

NEMA ICS 2	(1993) Industrial Control Devices, Controllers and Assemblies
NEMA ICS 6	(1993) Enclosures for Industrial Control and Systems
NEMA MG 1	(1993; Rev 1-1993; Rev 2-1995) Motors and Generators

NATIONAL FIRE PROTECTION ASSOCIATION (NFPA)

NFPA 70	(1999) National Electrical Code
NFPA 80	(1995) Fire Doors and Window

1.2 DESCRIPTION

Overhead rolling door shall be spring counterbalanced, rolling type, with interlocking slats, complete with guides, fastenings, hood, brackets, and operating mechanisms, and shall be designed for use on openings as indicated. Each door shall be provided with a permanent label showing the manufacturer's name and address and the model number of the door. Doors in excess of the labeled size shall be deemed oversize and shall be provided with a certificate signed by an official of the company, certifying that the door and operator have been designed to meet the specified requirements.

1.2.1 Wind Load Requirements

Door and components shall be designed to withstand the minimum design wind load of 960 Pa. Doors shall be constructed to sustain a superimposed load, both inward and outward, equal to 1-1/2 times the minimum design wind load. The door shall support the superimposed loads for a minimum period of 10 seconds without evidence of serious damage and shall be operable after conclusion of the tests. Test data showing compliance with design windload requirements for the door design tested in accordance with a uniform static load equal to 1-1/2 times the minimum design windload, shall be provided. The uniform static load test specimen shall be supported using guides, endlocks, and windlocks as required for project installation. Recovery shall be at least 3/4 of the maximum deflection within 24 hours after the test load is removed.

1.2.2 Operational Cycle Life

All portions of the door and door operating mechanism that are subject to movement, wear, or stress fatigue shall be designed to operate through a minimum of 50,000 cycles. One complete cycle of door operation will begin with the door in the closed position, move to the full open position and return to the closed position.

1.3 SUBMITTALS

Government approval is required for submittals with a "GA" designation; submittals having an "FIO" designation are for information only. The following shall be submitted in accordance with Section 01300 SUBMITTALS:

Data

Overhead Rolling Door Unit; FIO.

Manufacturer's catalog data, test data, and summary of forces and loads on the walls/jambs.

Drawings

Overhead Rolling Door Unit; FIO.

Drawings showing the location of each door including schedules. Drawings shall include elevations of each door type, details and method of anchorage, details of construction, location and installation of hardware, shape and thickness of materials, details of joints and connections, and details of guides, power operators, controls, and other fittings.

Instructions

Overhead Rolling Door Unit; GA.

Manufacturer's preprinted installation instructions.

Reports

Tests; FIO.

Certificates stating that the overhead rolling door conform to requirements of this section. Certificates for oversize doors stating that the door and hardware are manufactured in compliance with the requirements for door of this type and class and have been tested and meet the requirements for the class indicated.

Operation and Maintenance Manuals

Overhead Rolling Door Unit; GA.

Six complete copies of operating instructions outlining the step-by-step procedures required for motorized door and shutter operation. The instructions shall include the manufacturer's name, model number, service manual, parts list, and brief description of all equipment and their basic operating features. Six complete copies of maintenance instructions listing routine maintenance procedures, possible breakdowns and repairs, troubleshooting guides, and simplified diagrams for the equipment as installed. Also spare parts data for each different item of material and equipment specified. The data shall include a complete list of parts and supplies, source of supply, and a list of the high mortality maintenance parts.

1.4 DELIVERY AND STORAGE

Doors shall be delivered to the jobsite wrapped in a protective covering with the brands and names clearly marked thereon. Doors shall be stored in a dry location that is adequately ventilated and free from dirt and dust, water, and other contaminants, and in a manner that permits easy access for inspection and handling.

1.5 WARRANTY

Manufacturer's standard performance guarantees or warranties that extend beyond a 1-year period shall be provided.

PART 2 PRODUCTS

2.1 OVERHEAD ROLLING DOOR

Door shall be surface-mounted type with guides at jambs set back a sufficient distance to clear the opening. Exterior door shall be mounted as indicated.

2.1.1 Curtains

The curtains shall roll up on a barrel supported at the head of opening on brackets, and shall be balanced by helical springs. Steel slats for door less than 4.5 m wide shall be minimum bare metal thickness of 0.85 mm (22 gauge). Slats shall be of the minimum bare metal decimal thickness required for the width indicated and the wind pressure specified above..

2.1.2 Insulated Curtains

The slat system shall supply a minimum R-value of 5 when calculated in accordance with ASHRAE-81930. Slats shall be of the flat type as standard with the manufacturer. Slats shall consist of a urethane core not less than 17 mm thick, completely enclosed within metal facings. Exterior face of slats shall be

gauge as specified for curtains. Interior face shall be not lighter than 0.70 mm. Insulation shall have a flame spread rating of not more than 25 and a smoke development factor of not more than 50 when tested in accordance with ASTM E 84.

2.1.3 Endlocks and Windlocks

In addition to endlocks, exterior door shall have the manufacturer's standard windlocks as required to withstand the wind load. Windlocks shall prevent the curtain from leaving guides because of deflection from specified wind pressure.

2.1.4 Bottom Bar

The curtain shall have a standard bottom bar consisting of two hot-dip galvanized steel angles for steel doors. A sensing edge shall be attached to the bottom bar of doors that are electric-power operated.

2.1.5 Guides

Guides shall be steel structural shapes or formed steel shapes, of a size and depth to provide proper clearance for operation and resistance under the design windload. Guides shall be attached to adjoining construction with fasteners recommended by the manufacturer. Spacing of fasteners shall be as required to meet the minimum design windload.

2.1.6 Barrel

The barrel shall be steel pipe or commercial welded steel tubing of proper diameter for the size of curtain. Deflection shall not exceed 2.5 mm per meter of span. Ends of the barrel shall be closed with cast-iron or steel plugs, machined to fit the pipe.

2.1.7 Springs

Oil tempered helical steel counter-balance torsion springs shall be installed within the barrel and shall be capable of producing sufficient torque to assure easy operation of the door curtain. Access shall be provided for spring tension adjustment from outside of the bracket without removing the hood.

2.1.8 Brackets

Brackets shall be of steel plates to close the ends of the roller-shaft housing, and to provide mounting surfaces for the hood. An operation bracket hub and shaft plugs shall have sealed prelubricated ball bearings.

2.1.9 Hoods

Hoods shall be steel, with minimum bare metal thickness of 0.70 mm, formed to fit contour of the end brackets, and shall be reinforced with steel rods, rolled beads, or flanges at top and bottom edges. Multiple segment and single piece hoods shall be provided with support brackets of the manufacturer's standard design as required for adequate support.

2.1.10 Weatherstripping

Exterior door shall be fully weatherstripped. A compressible and replaceable weather seal shall be attached to the bottom bar. Weather seal at door guides shall be continuous vinyl or neoprene, bulb or leaf type, or shall be nylon-brush type. A weather baffle shall be provided at the lintel or inside the hood. Weatherstripping shall be easily replaced without special tools.

2.1.11 Operation

Door shall be operated by means of electric power with auxiliary chain hoist.

2.1.11.1 Electric Power Operator With Auxiliary Chain Hoist Operation

Electric power operators shall be heavy-duty industrial type. The unit shall operate the door through the operational cycle life specified. The electric power operator shall be complete with electric motor, auxiliary operation, necessary means of reduction, brake, mounting brackets, push button controls, limit switches, magnetic reversing starter, and all other accessories necessary to operate components specified in other paragraphs of this section. The operator shall be so designed that the motor may be removed without disturbing the limit-switches settings and without affecting the emergency chain operator. Doors shall be provided with an auxiliary operator for immediate emergency manual operation of the door in case of electrical failure. The emergency manual operating mechanism shall be so arranged that it may be operated from the floor without affecting the settings of the limit switches. A mechanical device shall be included that will disconnect the motor from the drive operating mechanism when the auxiliary operator is used. Where control voltages differ from motor voltage, a control voltage transformer shall be provided in and as part of the electric power operator system. Control voltage shall not exceed 120 volts.

a. Motors: Drive motors shall conform to NEMA MG 1, shall be high-starting torque, reversible type, and shall be of sufficient wattage horsepower and torque output to move the door in either direction from any position at a speed range of 0.23 m per second without exceeding the rated capacity. Motors shall be suitable for operation on 120 volts, 60 hertz, single phase current and shall be suitable for across-the-line starting. Motors shall be designed to operate at full capacity over a supply voltage variation of plus or minus 10 percent of the motor voltage rating. Motors shall be provided with overload protection.

b. Controls: Control equipment shall conform to NEMA ICS 2. Enclosures shall conform to NEMA ICS 6, Type 12 (industrial use). Exterior control stations shall be weatherproof push button type with corrosion-resistant cast-metal cover. Interior station shall be push button station with key lockout with interior key by others (core removable). Lock cylinders shall comply with requirements of Section 08700, Builders Hardware. Each control station shall be of the three position button type, marked "OPEN," "CLOSE," and "STOP. “The "OPEN" and "STOP" controls shall be of the momentary contact type with seal-in contact. The "CLOSE" control shall be of the momentary contact type. When the door is in motion and the "STOP" control is pressed, the door shall stop instantly and remain in the stop position; from the stop position, the door shall be operable in either direction by the "OPEN" or "CLOSE" controls. Controls shall be of the full-guarded type to prevent accidental operation. Readily adjustable limit switches shall be provided to automatically stop the doors at their fully open and closed positions. Provide additional contacts to be used as auxiliary contacts for exhaust fan interlock operation.

c. Sensing Edge Device: The bottom edge of electric power operated doors shall have sensing edge that will immediately reverse the door movement upon contact with an obstruction and cause the door

to return to its full open position. The sensing edge shall not substitute for a limit switch. Exterior doors shall be provided with a combination compressible weather seal and sensing edge.

d. Electrical Work: Conduit and wiring necessary for proper operation shall be provided under Section 16415 ELECTRICAL WORK, INTERIOR. Flexible connections between doors and fixed supports shall be made with extra flexible type SJO cable, except in hazardous locations where wiring shall conform to NFPA 70, Article 501, 502, 503, or 504 as appropriate. The cable shall have a spring-loaded automatic take up reel or a coil cord equivalent device.

2.1.12 Inertia Brake

Overhead rolling door shall have a mechanical inertia brake device which will stop the door from free fall in any position, should there be a failure in the motor operator brake or roller chain drive. The unit shall be capable of being reset with an easy back drive action.

2.1.13 Locking

Locking for motor operated door shall consist of self-locking gearing with chain lock for emergency hand chain.

2.1.14 Finish

Steel slats and hoods shall be hot-dip galvanized G90 in accordance with ASTM A 653, and shall be treated for paint adhesion and shall receive a baked on prime coat and a field applied finish coat. The paint system shall withstand a minimum of 1500 hours without blistering, bubbling, or rust. Surfaces other than slats, hood, and faying surfaces shall be cleaned and treated to assure maximum paint adherence and shall be given a factory dip or spray coat of rust inhibitive metallic oxide or synthetic resin primer.

2.1.15 Fire-Rating

Fire-rated doors indicated in the door schedule shall conform to the requirements specified herein and to NFPA 80 for the class indicated. Doors shall bear Underwriters Laboratories or Factory Mutual labels indicating the applicable fire rating. The construction details necessary for labeled counter doors shall take precedence over details indicated or specified herein. Fire-rated doors shall be complete with hardware, accessories, and automatic closing device. Provide door actuator and lbs degree F fusible link.

PART 3 EXECUTION

3.1 INSTALLATION

Door shall be installed in accordance with approved detail drawings and manufacturer's instructions. Anchors and inserts for guides, brackets, motors, switches, hardware, and other accessories shall be accurately located. Upon completion, door shall be free from warp, twist, or distortion. Door shall be lubricated, properly adjusted, and demonstrated to operate freely.

END OF SECTION

SECTION 08400

ALUMINUM STOREFRONT AND ENTRANCE DOORS

PART 1 - GENERAL

1.1 APPLICABLE PUBLICATIONS

The publications listed below form a part of this specification to the extent referenced. The publications are referred to in the text by the basic designation only.

ALUMINUM ASSOCIATION (AA)

AA-DAF-45 (1980) Designation System for Aluminum Finishes

ARMY TECHNICAL MANUAL (TM)

TM 5-809-10 (1 Oct 92) Seismic Design for Buildings

AMERICAN ARICHITECTURAL MANUFACTURER'S ASSOCIATION (AAMA)

AAMA 605.2 (1992) Voluntary Specification for High Performance Organic Coatings on Architectural Aluminum Extrusions and Panels

AAMA 1503.1 (1988) Voluntary Test Method for Thermal Transmittance and Condesation Resistance of Windows, Doors and Glazed Wall Sections

AMERICAN SOCIETY FOR TESTING AND MATERIALS (ASTM)

ASTM A 36 (1994) Carbon Structural Steel

ASTM B 209 (1992a) Aluminum and Aluminum Alloy Sheet and Plate

ASTM B 221 (1992a) Aluminum and Aluminum Alloy Extruded Bars, Rods, Wire, Shapes, and Tubes

ASTM E 283 (1991) Determining the Rate of Air Leakage Through Exterior Windows, Curtain Walls, and Doors under Specified Pressure Differences Acros the Specimen

ASTM E 330 (1990) Structural Performance of Exterior Windows, Curtain Walls, and Doors by Uniform Static Air Pressure Difference

1.2 SUBMITTALS

Government approval is required for submittals with a "GA" designation; submittals having an "FIO" designation are for information only. The following shall be submitted in accordance with Section 01300 SUBMITTALS:

Drawings

Aluminum Storefront and Entrance Doors; GA.

Shop drawings shall indicate elevations of units, full-size sections, thicknesses of metal, fastenings, methods of installation and anchorage, size and spacing of anchors, method of glazing, details of installation, connections with other work, and schedules showing location of each door and frame. Production shop drawings shall incorporate material or fabrication revisions, if any, as determined from mockup test results.

Certificates of Compliance

Aluminum Storefront and Entrance Doors; FIO.

Certificates of compliance stating that the window units and doors and frames conform to the specified requirements.

Samples

Aluminum Storefront and Entrance Doors; GA.

Samples shall be full size and shall complete as required for installation in the structure. Samples of the following shall be submitted:

a. Full size representative sample section of each profile type, minimum 300 mm long.

b. Corner section of window frame assembly 305 mm long, vertical and horizontal showing joining method and glazing.

Test Results

Aluminum Storefront and Entrance Doors; FIO.

Submit certified test reports of production run in accordance with Section 01400 CONTRACTOR QUALITY CONTROL.

1.3 DELIVERY AND STORAGE

1.3.1 All assemblies, components and accessories shall be fully protected from damage of all sort during handling, transit and storage. Damaged units which cannot be acceptably restored will be rejected.

PART 2 - PRODUCTS

2.1 MATERIALS

Swing-type aluminum doors and frames, of size and design shown on the drawings, shall be provdied at the locations indicated. Doors shall be furnished complete with frames, subframes, adjoining sidelights, trim and other accessories indicated and specified.

2.1.1 Aluminum Extrusions

Extrusions shall comply with ASTM B 221, Alloy 6063-T5, except alloy used for anodized color coatings, shall be required to produce the specified color. Aluminum sheets and strips shall comply with ASTM B 209, alloy and temper best suited for the purpose. Alloy and temper recommended by the manufacturer for strength, corrosion resistance, and application of required finish, but not less than 152 MPa ultimate tensile strength and not less than 3 mm thickness, except tubular shapes shall have a combined wall thickness of 4.7 mm at any location for framing members. Heavier material shall be used if required for strength or fabrication purposes. Alloy and temper shall be such to properly receive the specified finish.

2.1.2 Fasteners

Screws, nuts, washers, bolts, rivets and other miscellaneous fastening devices incorporated in the units shall be of hard aluminum or nonmagnetic stainless steel, or other non-corrosive materials compatible with aluminum and shall be of sufficient strength to perform the functions for which they are used. Exposed screws or bolts will be permitted only at inconspicuous locations and shall have heads countersunk. Do not use exposed fasteners, except where unavoidable and approved. Where permitted, exposed fasteners shall match the finish of the aluminum surfaces to which applied. Welds required on exposed surfaces shall be smoothly dressed. Welding shall produce a uniform texture and color in the finished work, free of flux and spatter. Provide galvanic separation between any contacting dissimilar materials.

2.1.3 Steel Components

Shall conform to ASTM A 36, shop primed.

2.1.4 Sealant

Shall conform to Section 07920 JOINT SEALING.

2.1.5 Separators

Dissimilar metals and dynamic connections shall have contact surfaces separated with high-impact polystyrene or nylon material with smooth surfaces on both sides and a minimum thickness of 0.8 mm. Dynamic connections shall be a minimum of 1.6 mm thickness.

2.1.6 Glass and Glazing

Shall conform to Section 08810 GLASS AND GLAZING. Metal glazing beads, vinyl inserts, and glazing gaskets shall be provided for securing glass. Glass stops shall be tamperproof on exterior side.

2.1.7 Weatherstripping

Weatherstripping shall be continuous silicone-treated wool pile type, or a type recommended by the door manufacturer, and shall be proveded on head and jamb of exterior doors. Weatherstripping for bottom of doors shall be as shown. Weatherstripping shall be easily replaced without special tools, and shall be adjustable at meeting stiles of pairs of doors. Air leakage of weatherstripping shall be in accordance with ASTM E 283 at standard test conditions. Door manufacturer’s standard applied to stiles, heads, and bottoms of exterior doors and shall be easily replaced without special tools.

2.1.8 Hardware

Hardware shall be as specified in Section 08700 BUILDER'S HARDWARE. Doors and frames shall be cut, reinforced, drilled, and tapped at the factory to receive template hardware. Reinforcement shall be provided in the core of doors as required to receive locks, door closers, and other hardware. Doors to receive surface applied hardware shall be reinforced as required. Door manufacturer shall coordinate door preparation for the hardware specified.

2.2 FABRICATION

2..2.1 General

Frames shall be double glazed and shall have a minimum condesation resistance factor of 46 in accordance with AAMA 1503.1. Frames shall be fabricated of extruded aluminum shapes to contours as shown on the drawings. Shapes shown are representations of design, function, and required profile. Dimensions shown are minimum. Shapes of equivalent design may be submitted, subject to the approval of samples. Minimum metal wall thickness shall be 3 mm, except glazing beads, moldings, and trim shall be not less than 1.5 mm. Frames that are to receive glass shall have removable snap-on glass stops and glazing beads. Joints in frame members shall be milled to a hairline watertight fit, reinforced, and secured mechanically by steel clip arrangement or by screw spline attachment. Fabrication of aluminum work shall conform to the manufacturer's standard methods, except to the extent that more specific or more stringent requirements are indicated, specified or required.

2.2.1.1 Maintain fabrication schedule sufficiently in advance of date scheduled for erection to permit refabrication of any unacceptable materials without delaying construction schedule.

2.2.1.2 Fabrication of member parts shall be done in full-length pieces without splice joints between intersection angles and ends.

2.2.1.3 Concealed welding on back of exposed surfaces shall not affect surface finish. Prevent corrosion or staining.

2.2.1.4 Joints and corners shall be accurately machined to fit rigidly together at contact points and produce perfect continuity of line and design. All joints shall be made waterproof.

2.2.2 Framing

The required sizes, configurations and relation to adjacent construction are indicated. The framing details may be based on one or more manufacturer's modified as detailed. Variation in profiles and dimensions will be acceptable as may be required to meet performance requirements, provided the desired intent as detailed is maintained with deviations minimized.

2.2.2.1 Framing sections shall accommodate the glass thicknesses, gaskets, flashing, sealants, aluminum panels, reinforcing and connected components.

2.2.3 Anchorage and Structural Support

Anchors shall be stainless steel or steel with a hot dipped galvanized finish. Anchors of the sizes and shapes required shall be provided for securing aluminum frames to adjacent construction. Anchors shall be placed 630 mm apart. Transom bars shall be anchored at ends, and mullions shall be anchored at head and

sill. Vertical mullion reinforcement shall be of sufficient length to extend up to the overhead structural slab or framing and be securely attached thereto. The bottom of each frame shall be anchored to the rough floor construction with 1.2 mm thick stainless steel angle clips secured to the back of each jamb and to floor construction. Stainless steel bolts and expansion rivets shall be used for fastening clip anchors. Freestanding door frames shall be reinforced and securely anchored to floor construction. Provide for anchorage and fastening to supporting structure and component to component as shown or required. All anchorage and fastenings shall be non-corrosive and compatible with the aluminum, and adjacent components. Type, size, alloy, quantity and spacing of fasteners and anchorage devices shall be as required for performance.

2.2.3.1 Methods of fastening and fasteners shall be concealed to the greatest extent possible.

2.2.3.2 Structural support, bracing and reinforcement for and related to aluminum framing assemblies shall be designed, furnished, and installed to meet performance criteria.

2.2.4 Finish

Finish of storefront windows, doors, and frames shall be free of scratches and other serious surface blemishes. Exposed aluminum surfaces shall be finished with anodic coating conforming to AA DAF-45: 0.010 mm to 0.02 mm, Architectural Class I, AA-MIO-C22-A44, color anodic coating, 0.02 mm. Color shall be as indicated on the drawings.

2.3 PERFORMANCE REQUIREMENTS

2.3.1 General

All components, assemblies, and completed work included in and pertinent to the scope of work in this section shall conform to or exceed the performance requirements herein specified. Wind loading need not be additive to seismic loading. The performance requirements shall include, but not necessarily be limited to, the following items.

2.3.2 Water Penetration

Provide a totally watertight storefront door enclosure.

2.3.2.1 Water penetration in this section is defined as the appearance of uncontrolled water on the interior side on any part of the assembly.

2.3.2.2 Provision shall be made to drain to the exterior of the storefront door any and all water entering at joints or glazing reveals and any condensation occurring within unit construction.

2.3.3 Wind Load

Storefront doors shall be of sufficient strength to withstand a design wind load of 1440 Pa of supported area with a deflection no more than 1/175 times the length of any metal framing member or 19 mm, whichever is less. The maximum deflection of any section in the plane of the glass shall not exceed 6 mm. Doors shall be tested in accordance with ASTM E 330 at a pressure not less than 1.5 times design load.

2.3.4 Dead load shall be the actual weight of materials supported by the above wall and roof structures.

2.3.5 Seismic Forces

The seismic forces shall be designed to comply with Army Technical Manual TM 5-809-10. Vertical seismic or uplift forces shall be considered.

2.3.6 Thermal forces and/or stresses: 9 to 65 degrees Celsius.

2.3.6.1 Thermal Movement

Provide and make allowances for the noiseless contraction and expansion of all components and materials, over an ambient temperature range of 57 degrees Celsius without buckling, opening of joints, glass breakage, undue stress on fasteners, or any detrimental effects to the storefront assemblies, related components, and adjacent structural, and/or building elements.

2.3.7 Building Movements

2.3.7.1 In the plane of the storefront door, deflection of framing members shall not reduce the glass or panel bit below 75 percent of the design dimension and shall not reduce the glass or panel edge clearance below 25 percent of the design dimension or 3 mm, whichever is greater. Restrict deflection further if required for assembly and fit of components.

2.3.7.2 At connection points of framing members to anchors, anchor deflection in any direction shall not exceed 1.5 mm. Where connection points are not clearly defined, maximum anchor deflection shall not exceed 1.5 mm.

2.3.7.3 Net permanent deflections of components must not exceed 1/1,000 of span length, permanent distortion.

2.3.8 Glass

Applicable glass setting details shall conform to the applicable glass manufacturer's recommendations for the openings and/or sizes indicated on the drawings and the performance requirements as herein specified.

2.3.9 Anchorage and Structural Support Framing

All anchor assemblies and components, braces, reinforcements, and structural support framing including all related connections and/or fasteners, for and related to the storefront door assemblies, shall be designed, furnished, and installed as required for full compliance with the performance criteria as herein specified.

PART 3 - EXECUTION

3.1 SITE INSPECTION

3.1.1 Prior Inspection of Structure

After lines and grades have been established and before beginning installation in any area, erector shall examine all parts of structure on which the aluminum storefront windows and entrances are to be placed. Should any conditions be found which, in his opinion, will prevent the proper and timely execution of his work or endanger its permanency, he shall report such conditions in writing to the Contractor. Installation or erection will not proceed in that area until such conditions are corrected.

3.1.2 Preparation

3.1.2.1 Embedded Steel Anchor Inserts

Provide detailed layout and coordinate placement as required.

3.1.2.2 Coordinate installation and related work with work of other sections and provide items to be placed during installation of other work at proper time to avoid delays in work. Place such items, including inserts and anchors, accurately in relation to final location of components.

3.2 ERECTION

3.2.1. Provide labor, materials, booms, accessories, and supervision necessary to erect the specified products completely. Set walls plumb, square, and level, and fasten securely in correct horizontal and/or vertical alignment. Seal joints within and between units.

3.2.2 Tolerances

Components shall conform to the following erection tolerances.

3.2.2.1 Deviation from established vertical, horizontal, or designated position shall not exceed 3 mm per 3.6 m of length of any member.

3.2.2.2 Maximum offset from true alignment between two abutting members shall not exceed 1.5 mm.

3.2.2.3 Maximum joint gap or opening between removable glazing stops, glass pocket fillers, and/or closures, and adjacent members shall not exceed 0.8 mm.

3.2.3 Do not erect members which are warped, bowed, deformed, or otherwise damaged or defaced to such extent as to impair strength or appearance. Remove and replace members damaged in process of erection.

3.2.4 Paint concealed contact surfaces or dissimilar materials with a heavy coating of bituminous paint, or provide other separation as per manufacturer's recommendations.

3.3 PROTECTION AND CLEANING

3.3.1 Removal of Debris

Debris caused incidental to installation shall be promptly removed from jobsite as work progresses.

3.3.2 After installation, clean exterior and interior surfaces of all contaminants using methods and materials recommended by aluminum storefront window and entrance manufacturer. Metal structures shall be free of abrasions and scratches.

END OF SECTION

This page intentionally blank

SECTION 08520

ALUMINUM WINDOWS

1 PART 1 - GENERAL

1.1 REFERENCES

The publications listed below form a part of this specification to the extent referenced. The publications are referred to in the text by basic designation only.

ALUMINUM ASSOCIATION (AA)

AA DAF-45	(1980) Designation System for Aluminum Finishes

AMERICAN ARCHITECTURAL MANUFACTURERS ASSOCIATION (AAMA)

AAMA 101	(1993) Voluntary Specifications for Aluminum Prime Windows and Sliding Glass Doors
AAMA 603.8	(1992) Voluntary Performance Requirements and Test Procedures for Pigmented Organic Coatings on Extruded Aluminum
AAMA 605.2	(1992; Addenda Feb 1994) Voluntary Specification for High Performance Organic Coatings on Architectural Aluminum Extrusions and Panels
AAMA 1503.1	(1988) Voluntary Test Method for Thermal Transmittance and Condensation Resistance of Windows, Doors and Glazed Wall Sections

AMERICAN SOCIETY FOR TESTING AND MATERIALS (ASTM)

ASTM E 283	(1991) Determining the Rate of Air Leakage Through Exterior Windows, Curtain Walls, and Doors Under Specified Pressure Differences Across the Specimen
ASTM E 330	(1990) Structural Performance of Exterior Windows, Curtain Walls, and Doors by Uniform Static Air Pressure Difference
ASTM E 547	(1993) Water Penetration of Exterior Windows, Curtain Walls, and Doors by Cyclic Static Air Pressure Differential

AMERICAN SOCIETY OF MECHANICAL ENGINEERS (ASME)

ASME A39.1	(1991; A39.1a) Safety Requirements for Window Cleaning

FEDERAL SPECIFICATIONS (FS)

FS RR-W-365	(Rev A) Wire Fabric (Insect Screening)

NATIONAL FIRE PROTECTION ASSOCIATION (NFPA)

NFPA 101 (1994) Safety to Life from Fire in Buildings and Structures

SCREEN MANUFACTURERS ASSOCIATION (SMA)

SMA 1004 (1987) Aluminum Tubular Frame Screens for Windows

1.2 WINDOW PERFORMANCE

Aluminum windows shall be designed to meet the following performance requirements. Testing requirements shall be performed by an independent testing laboratory or agency.

1.2.1 Structural Performance

Structural test pressures on window units shall be for positive load (inward) and negative load (outward) in accordance with ASTM E 330. After testing, there shall be no glass breakage, permanent damage to fasteners, hardware parts, support arms or actuating mechanisms or any other damage which could cause window to be inoperable. There shall be no permanent deformation of any main frame, sash or ventilator member in excess of the requirements established by AAMA 101 for the window types and classification specified in this section.

1.2.2 Air Infiltration

Air infiltration shall not exceed the amount established by AAMA 101for each window type when tested in accordance with ASTM E 283.

1.2.3 Water Penetration

Water penetration shall not exceed the amount established by AAMA 101for each window type when tested in accordance with ASTM E 547.

1.2.4 Thermal Performance

Thermal transmittance for thermally broken aluminum windows with insulating glass shall not exceed R-Value Class R3.33 when tested in accordance with AAMA 1503.1.

1.3 SUBMITTALS

Government approval is required for submittals with a "GA" designation; submittals having an "FIO" designation are for information only. The following shall be submitted in accordance with Section 01330 SUBMITTAL PROCEDURES:

SD-01 Data

Aluminum Windows; FIO.

Manufacturer's descriptive data and catalog cut sheets.

SD-04 Drawings

Aluminum Windows; FIO.

Drawings indicating elevations of window, rough-opening dimensions for each type and size of window, full-size sections, thicknesses of metal, fastenings, methods of installation and anchorage, connections with other work, type of wall construction, size and spacing of anchors, method of glazing, types and locations of operating hardware, mullion details, weatherstripping details, and window schedules showing locations of each window type.

SD-06 Instructions

Aluminum Windows; FIO.

Manufacturer's preprinted installation instructions and cleaning instructions.

SD-09 Reports

Aluminum Windows; FIO.

Reports for each type of aluminum window attesting that identical windows have been tested and meet all performance requirements established under paragraph WINDOW PERFORMANCE.

SD-13 Certificates

Aluminum Windows; FIO.

Certificates stating that the aluminum windows are AAMA certified conforming to requirements of this section. Labels or markings permanently affixed to the window will be accepted in lieu of certificates.

SD-14 Samples

Aluminum Windows; FIO.

Manufacturer's standard color samples of the specified finishes.

1.4 QUALIFICATION

Window manufacturer shall specialize in designing and manufacturing the type of aluminum windows specified in this section, and shall have a minimum of 5 years of documented successful experience. Manufacturer shall have the facilities capable of meeting contract requirements, single-source responsibility and warranty.

1.5 DELIVERY AND STORAGE

Aluminum windows shall be delivered to project site and stored in accordance with manufacturer's recommendations. Damaged windows shall be replaced with new windows.

1.6 WARRANTY

Manufacturer's standard performance guarantees or warranties that extend beyond a one year period shall be provided.

2 PART 2 - PRODUCTS

2.1 ALUMINUM WINDOW TYPES

Aluminum windows shall match the profiles and sill, jamb, head, and mullion dimensions of the adjacent, existing Squadron Operations Facility FY96. Aluminum windows shall consist of complete units including sash, glass, frame, weatherstripping, and hardware. Windows shall conform to AAMA 101. Windows shall be double-glazed and shall have a minimum condensation resistance factor of 46 when tested in accordance with AAMA 1503.1. Windows shall be constructed to withstand the building's calculated seismic drift of 0.0312 mm (0.77 inch) +/- total at top of steel of perimeter roof joist support beams and 0.0156 mm (0.38 inch) +/- interstory drift.

2.1.1 Fixed Windows

Aluminum fixed windows shall conform to AAMA 101 HS-HC40 type, non-operable glazed frame, complete with provisions for reglazing in the field.

2.2 WEATHERSTRIPPING

Weatherstripping for ventilating sections shall be of type designed to meet water penetration and air infiltration requirements specified in this section in accordance with AAMA 101, and shall be manufactured of material compatible with aluminum and resistant to weather. Weatherstrips shall be factory-applied and easily replaced in the field. Neoprene or polyvinylchloride weatherstripping are not acceptable where exposed to direct sunlight.

2.3 ACCESSORIES

2.3.1 Fasteners

Fastening devices shall be window manufacturer's standard design made from aluminum, non-magnetic stainless steel, cadmium-plated steel, nickel/chrome-plated steel or magnetic stainless steel in compliance with AAMA 101. Self-tapping sheet metal screws will not be acceptable for material thicker than 1.5875 mm (1/16 inch).

2.3.2 Hardware

Hardware shall be as specified for each window type and shall be fabricated of aluminum, stainless steel, cadmium-plated steel, zinc-plated steel or nickel/chrome-plated steel of quality established by AAMA 101.

2.3.3 Window Anchors

Anchoring devices for installing windows shall be made of aluminum, cadmium-plated steel, stainless steel, or zinc-plated steel conforming to AAMA 101.

2.4 GLASS AND GLAZING

Aluminum windows shall be designed for inside glazing, field glazing, and for glass types scheduled on drawings and specified in Section 08810 GLASS AND GLAZING. Units shall be complete with glass and glazing provisions to meet AAMA 101. Glazing material shall be compatible with aluminum, and shall not require painting.

2.5 FINISH

2.5.1 Anodized Aluminum Finish

Exposed surfaces of aluminum windows shall be finished with anodic coating conforming to AA DAF-45: Architectural Class I, AA-M10-C22-A44, color anodic coating, 0.7 mil or thicker. Finish shall be free of scratches and other blemishes.

2.5.2 Color

Color shall be as indicated.

3 PART 3 - EXECUTION

3.1 INSTALLATION

Aluminum windows shall be installed in accordance with approved shop drawings and manufacturer's published instructions. Aluminum surfaces in contact with masonry, concrete, wood and dissimilar metals other than stainless steel, zinc, cadmium or small areas of white bronze, shall be protected from direct contact using protective materials recommended by AAMA 101. The completed window installation shall be watertight in accordance with Section 07920 JOINT SEALING. Glass and glazing shall be installed in accordance with requirements of this section and Section 08810 GLASS AND GLAZING.

3.2 ADJUSTMENTS AND CLEANING

3.2.1 Hardware Adjustments

Final operating adjustments shall be made after glazing work is complete.

3.2.2 Cleaning

Aluminum window finish and glass shall be cleaned on exterior and interior sides in accordance with window manufacturer's recommendations. Alkaline or abrasive agents shall not be used. Precautions shall be taken to avoid scratching or marring window finish and glass surfaces.

END OF SECTION

This page intentionally blank

SECTION 08700

BUILDERS' HARDWARE

PART 1 GENERAL

1.1 REFERENCES

The publications listed below form a part of this specification to the extent referenced. The publications are referred to in the text by basic designation only.

AMERICAN SOCIETY FOR TESTING AND MATERIALS (ASTM)

ASTM E 283	(1991) Determining the Rate of Air Leakage Through Exterior Windows, Curtain Walls and Doors Under Specified Pressure Differences Across the Specimen
ASTM F 883	(1990) Padlocks

BUILDERS HARDWARE MANUFACTURERS ASSOCIATION (BHMA)

BHMA-01	(Effective thru Jun 1995) Directory of Certified Locks & Latches
BHMA-02	(Effective thru Jul 1995) Directory of Certified Door Closers
BHMA-03	(Effective thru Jul 1996) Directory of Certified Exit Devices
BHMA A156.1	(1988) Butts and Hinges
BHMA A156.2	(1989) Bored and Preassembled Locks and Latches
BHMA A156.3	(1994) Exit Devices
BHMA A156.4	(1992) Door Controls - Closers
BHMA A156.5	(1992) Auxiliary Locks & Associated Products
BHMA A156.6	(1994) Architectural Door Trim
BHMA A156.7	(1988) Template Hinge Dimensions
BHMA A156.13	(1994) Mortise Locks & Latches
BHMA A156.16	(1989) Auxiliary Hardware

BHMA A156.18	(1993) Materials and Finishes
BHMA A156.19	(1990) Power Assist and Low Energy Power Operated Doors
BHMA A156.20	(1989) Strap and Tee Hinges and Hasps
BHMA A156.21	(1989) Thresholds

DOOR AND HARDWARE INSTITUTE (DHI)

DHI-03	(1989) Keying Systems and Nomenclature
DHI-04	(1976) Recommended Locations for Builders' Hardware for Custom Steel Doors and Frames
DHI-05	(1990) Recommended Locations for Architectural Hardware for Standard Steel Doors and Frames
DHI-A115.IG	(1994) Installation Guide for Doors and Hardware
DHI A115-W (Varies)	Wood Door Hardware Standards (Incl All5-W1 thru A115-W9)

AMERICANS WITH DISABILITIES ACT ACCESSIBILITY GUIDELINES (ADAAG)

ADAAG	Detectable Warnings

1.2 SUBMITTALS

Government approval is required for submittals with a "GA" designation; submittals having an "FIO" designation are for information only. The following shall be submitted in accordance with Section 01300 SUBMITTALS:

SD-01 Data

Hardware and Accessories; FIO.

Manufacturer's descriptive data, technical literature, catalog cuts, and installation instructions. Spare parts data for locksets, exit devices, closers, electric locks, electric strikes, electro-magnetic closer holder release devices, and electric exit devices, after approval of the detail drawings, and not later than 1 month(s) prior to the date of beneficial occupancy. The data shall include a complete list of parts and supplies, with current unit prices and source of supply.

SD-04 Drawings

Hardware Devices; FIO.

Detail drawings for hardware devices for computerized keying systems, magnetic cards, keyless push button access control systems, and other electrical hardware devices showing complete wiring and schematic diagrams and other details required to demonstrate proper function of units.

SD-07 Schedules

Hardware Schedule; FIO.

Hardware schedule listing all items to be furnished. The schedule shall include for each item: the quantities; manufacturer's name and catalog numbers; the ANSI number specified, sizes; detail information or catalog cuts; finishes; door and frame size and materials; location and hardware set identification cross-references to drawings; corresponding reference standard type number or function number from manufacturer's catalog if not covered by ANSI or BHMA; and list of abbreviations and template numbers.

Keying Schedule; GA.

Keying schedule developed in accordance with DHI-03, after the keying meeting with the user.

SD-13 Certificates

Hardware and Accessories; FIO.

The hardware manufacturer's certificates of compliance stating that the supplied material or hardware item meets specified requirements. Each certificate shall be signed by an official authorized to certify in behalf of the product manufacturer and shall identify quantity and date or dates of shipment or delivery to which the certificates apply. A statement that the proposed hardware items appear in BHMA-01, BHMA-02 and BHMA-03 directories of certified products may be submitted in lieu of certificates.

1.3 PREDELIVERY CONFERENCE

Upon approval of the Hardware Schedule, the construction Contractor shall arrange a conference with the hardware supplier, Contracting Officer and the using agency to determine keying system requirements. Location of the key control storage system, set-up and key identification labeling will also be determined.

1.4 DELIVERY, STORAGE, AND HANDLING

Hardware shall be delivered to the project site in the manufacturer's original packages. Each article of hardware shall be individually packaged in the manufacturer's standard commercial carton or container, and shall be properly marked or labeled to be readily identifiable with the approved hardware schedule. Each change key shall be tagged or otherwise identified with the

door for which its cylinder is intended. Where double cylinder functions are used or where it is not obvious which is the key side of a door, appropriate instructions shall be included with the lock and on the hardware schedule. Manufacturer's printed installation instructions, fasteners, and special tools shall be included in each package.

1.5 SPECIAL TOOLS

Special tools, such as those supplied by the manufacturer, unique wrenches, and dogging keys, shall be provided as required to adjust hardware items.

1.6 WARRANTY

Manufacturer's standard performance guarantees or warranties that extend beyond a one year period shall be provided.

1.7 OPERATION AND MAINTENANCE MANUALS

Six complete copies of maintenance instructions listing routine maintenance procedures, possible breakdowns and repairs, and troubleshooting guides shall be provided. The instructions for electric locks, electric strikes, electro-magnetic closer holder release devices, and electric exit devices shall include simplified diagrams as installed.

PART 2 PRODUCTS

2.1 GENERAL HARDWARE REQUIREMENTS

Hardware shall conform to the requirements specified herein and the HARDWARE SETS listing at the end of this section. Hardware set numbers correspond to the set numbers shown on the drawings.

2.2 TEMPLATES

Requirements for hardware to be mounted on metal doors or metal frames shall be coordinated between hardware manufacturer and door or frame manufacturer by use of templates and other information to establish location, reinforcement required, size of holes, and similar details. Templates of hinges shall conform to BHMA A156.7.

2.3 HINGES

Hinges shall conform to BHMA A156.1. Hinges used on metal doors and frames shall also conform to BHMA A156.7. Except as otherwise specified, hinge sizes shall conform to the hinge manufacturer's printed recommendations.

2.3.1 Hinges for Reverse Bevel Doors with Locks

Hinges for reverse bevel doors with locks shall have pins that are made nonremovable by means such as a set screw in the barrel, or safety stud, when the door is in the closed position.

2.3.2 Contractor's Option

Hinges with antifriction bearings may be furnished in lieu of ball bearing hinges.

2.3.3 Pivot Hinges

Pivot hinges shall conform to BHMA A156.4.

2.4 LOCKS AND LATCHES

To the maximum extent possible, locksets, latchsets and deadlocks shall be the products of a single manufacturer. Lock fronts for double-acting doors shall be rounded. Strikes for wood frames and pairs of wood doors shall be furnished with wrought boxes.

2.4.2 Bored Lock and Latchsets

Bored lock, latchsets, and strikes shall be series 4000 and shall conform to BHMA A156.2, Grade 1. Bored type locks and latches for doors 35 mm thick and over shall have adjustable bevel fronts or otherwise conform to the shape of the door.

2.4.4 Auxiliary Locks and Associated Products

Bored and mortise dead locks and dead latchs, narrow style dead locks and dead latches, rim latches, dead latches, and dead bolts, and electric strikes shall conform to BHMA A156.5. Bolt and latch retraction shall be dead bolt style. Strike boxes shall be furnished with dead bolt and latch strikes for Grade 1.

2.4.5 Lock Cylinders (Mortise, Rim and Bored)

Lock cylinders shall comply with BHMA A156.5. Cylinders shall have key removable type cores. Locks shall be compatible with existing Best Master Keying System. Construction interchangeable cores shall be provided. Disassembly of knob or lockset shall not be required to remove core from lockset. All locksets, exit devices, and padlocks shall accept same interchangeable cores.

2.4.7 Padlocks

Padlocks shall conform to ASTM F 883. Straps, tee hinges, and hasps shall conform to BHMA A156.20.

2.4.8 Lock Trim

Lock trim shall be cast, forged, or heavy wrought construction of commercial plain design. In addition to meeting the test requirement of BHMA A156.2 or BHMA A156.13, knobs, lever handles, roses, and escutcheons shall be 1.27 mm thick, if unreinforced. If reinforced, the outer shell shall be 0.89 mm thick and the combined thickness shall be 1.78 mm except that knob shanks shall be 1.52 mm thick. Knob diameter shall be 54 to 57 mm. Lever handles shall be of plain design with ends returned to no more than 10 mm from the door face.

2.4.9 Cipher Lock

Cipher lock shall be multi-level progammable through keypad unit with master code. Unit shall be capable of being masterkeyed and shall be compatible with Best 6 or 7 pin interchangeable core cylinders. Access code, key bypass or remote bypass shall allow lever to retract latch. Unit shall be UL listed grade 1 lockset, fire rated, conforming to ADAAG requirements.

2.4.10 Three-Position Dial Spin Lockset

Three-position dial spin lockset shall be electro/mechanical lock approved by GSA for Class 5 and Class 8 security vault doors. It shall be equal to Mas-Hamilton X-07 lockset and shall have the following features: three modes of operation (single combination mode, dual combination mode and supervisory (subordinate mode), self-powered by its own generator, liquid crystal display indicating dialing direction and easy to read numbers, ability to dial directly to numbers without need for specific number of revolutions before entering each number of the combination, ability to back up and reapproach number you have missed in dialing sequence (without having to start over), audit feature, microcomputer which regenerates a random starting point each time a number of the combination is entered, storage of combinations in microcomputers non-volatile memory, fail-secure feature in case of substantial voltage surge.

2.5 EXIT DEVICES AND EXIT DEVICE ACCESSORIES

Exit devices and exit device accessories shall conform to BHMA A156.3, Grade 1.

2.5.1 Exit Devices and Auxiliary Items

Trim shall be of wrought construction and commercial plain design with straight, beveled, or smoothly rounded sides, corners, and edges. Adjustable strikes shall be provided for rim type and vertical rod devices. Open back strikes shall be provided for pairs of doors with mortise and vertical rod devices; except open back strikes shall be used on labeled doors only where specifically provided for in the published listings. Touch bars shall be provided in lieu of conventional crossbars and arms. Escutcheons shall be provided not less than 175 by 55 mm. Escutcheons shall be cut to suit cylinders and operating trim.

2.5.2 Door Coordinator

Door coordinator with carry bar shall be Type 21 and shall be provided for each pair of doors equipped with an overlapping astragal. The coordinator may be gravity operated and shall be capable of holding the active door of a pair open until the inactive door has preceded it in the closing cycle. When used as fire exit hardware, the coordinator and carry bar shall be listed or labeled by a nationally recognized independent testing laboratory.

2.5.3 Removable Mullions

Removable mullions shall be Type 22 of the box type and shall be used only with those exit devices for which the mullions were manufactured. Mullions shall be furnished with mullion stabilizers of the same manufacturer.

2.7 KEYING

Provide Best compatible locksets/cylinders. Locksets shall be products of one manufacturer. Rim cylinders, mortise cylinders, bored locksets shall all have interchangeable cores that are removable by special control keys. Cylinders shall accept Best Lock Company seven pin cores. Government will provide final cores and keys. During construction provide locks with construction cores and keys; maintain locks operative for access and exit by construction keys. At time of completion, when required by Contracting Officer, permanent cores will be installed by Contractor . Contractors installer shall be bonded installer. Keys shall be supplied as follows:

Construction keys: 10 total.

2.8 DOOR CLOSING DEVICES

Door closing devices shall conform to BHMA A156.4, Grade 1. Closing devices shall be products of one manufacturer for each type specified. The opening resistance of closing devices shall not exceed 67 N applied at the latch stile or exceed 22 N where low opening resistance is scheduled.

2.8.1 Surface Type Closers

Surface type closers shall be Grade 1, C02000 Full Cover with options PT-4H, Size 1 or 2 through Size 6, and PT-4D with back check position valve. Except as otherwise specified, sizes shall conform to the manufacturer's published recommendations. Closers for outswinging exterior doors shall have parallel arms or shall be top jamb mounted. Closers for doors close to a wall shall be of narrow projection so as not to strike the wall at the 90-degree open position.

2.12 ARCHITECTURAL DOOR TRIM

Architectural door trim shall conform to BHMA A156.6.

2.12.1 Door Protection Plates

2.12.1.1 Kick Plates

Kick plates shall be Type J102 aluminum. Width of plates shall be 50 mm less than door width for single doors and 25 mm less for pairs of doors. Height shall be 400 mm, except where the bottom rail is less than 400 mm the plate shall extend to within 13 mm of the panel mold or glass bead. Edges of metal plates shall be beveled.

2.12.3 Push Plates

2.12.3.2 Flat Plates

Flat plates shall be Type J301 1.27 mm thick stainless steel**.** Edges of metal plates shall be beveled.

2.12.4 Door Pulls and Push/Pull Units

2.12.4.1 Arm Pulls

Arm pulls shall be Category J400, double base, aluminum.

2.12.4.3 Door Pulls

Door pulls shall be Category J400 aluminum of plain modern design. Pulls for hollow metal, mineral core wood or kalamein doors shall be Type J405 thru-bolted to Type J301 flat push plates.

2.13 AUXILIARY HARDWARE

Auxiliary hardware, consisting of door holders, door stops, shall conform to BHMA A156.16. Lever extension flush bolts shall be Type L14081. Dust-proof strikes shall be Type L04011 for doors that are not fire rated. Dust-proof strikes shall be Type L04021 for fire rated doors.

2.14 MISCELLANEOUS

2.14.1 Metal Thresholds

Thresholds shall conform to BHMA A156.21. Thresholds for exterior doors shall be extruded aluminum of the type indicated and shall provide proper clearance and an effective seal with specified weather stripping. Thresholds for use with floor closers shall conform to BHMA A156.4. Where required, thresholds shall be modified to receive projecting bolts of flush bolts**,** exit devices. Thresholds shall be beveled with slopes not exceeding 1:12 and with heights not exceeding 13 mm. Air leakage rate of weatherstripping shall not exceed 0.775 liters per second per lineal meter of crack when tested in accordance with ASTM E 283 at standard test conditions.

2.14.2 Rain Drips

Extruded aluminum, not less than 1.78 mm thick, bronze anodized. Door sill rain drips shall be 38 mm to 44 mm high by 16 mm projection. Overhead rain drips shall be approximately 38 mm high by 63 mm projection and shall extend 50 mm on either side of the door opening width.

2.14.3 Aluminum Housed Type Weatherseals

Weatherseals of the type indicated shall consist of extruded aluminum retainers not less than 1.78 mm wall thickness with vinyl, neoprene, silicone rubber, polyurethane or vinyl brush inserts. Aluminum shall be clear (natural) anodized. Weatherseal material shall be of an industrial/commercial grade. Seals shall remain functional through all weather and temperature conditions. Air leakage rate of weatherstripping shall not exceed 0.775 liters per second per lineal meter of crack when tested in accordance with ASTM E 283 at standard test conditions.

2.14.4 Gasketing

Gasketing shall be a compression type seal, silicon based, self-adhesive product for use on steel door frames with steel doors for 20-. Color shall be white. Air leakage rate of weatherstripping shall not exceed 0.775 liters per second per lineal meter of crack when tested in accordance with ASTM E 283 at standard test conditions.

2.15 FASTENINGS

Fastenings of proper type, size, quantity, and finish shall be supplied with each article of hardware. Machine screws and expansion shields shall be used for attaching hardware to concrete or masonry. Fastenings exposed to the weather in the finished work shall be of brass, bronze, or stainless steel. Sex bolts, through bolts, or machine screws and grommet nuts, where used on reverse-bevel exterior doors equipped with half-surface or full-surface hinges, shall employ one-way screws or other approved tamperproof screws. Screws for the jamb leaf of half-mortise and full-surface hinges attached to structural steel frames shall be one-way or other approved tamperproof type.

2.16 FINISHES

Unless otherwise specified, finishes shall conform to those identified in BHMA A156.18, and shall be satin chromium. Where painting of primed surfaces is required, painting is specified in Section 09900 PAINTING, GENERAL.

2.17 LOW ENERGY POWER OPEN DOOR MECHANISM

Main entrance doors indicated in hardware groups shall be provided with a low energy, slow speed, low force automatic swing operator. The opening force shall be at least 67 N, and shall open automatically with a push button or manually with a push or pull. The swing operator shall comply with BHMA A156.19. Push buttons shall be located at locations shown on the drawings. Swing operator shall have variable opening, closing, and back check speed adjustments. Time delay adjustable from 2 to 30 seconds. Motor protection circuit with reset switch. Swing operator shall have a flat wire torsion clock type spring for easy manual opening and shall have a spring return to close. The operator shall be a self-contained, medium duty, electromechanical operator that shall mount inside an aluminum header.

PART 3 EXECUTION

3.1 APPLICATION

Hardware shall be located in accordance with DHI-04 and DHI-05. When approved, slight variations in locations or dimensions will be permitted. Application shall be in accordance with DHI-A115.IG or DHI A115-W. Door control devices for exterior doors such as closers and holders, shall be attached to doors with thru bolts and nuts or sex bolts. Alternate fastening methods may be approved by the Contracting Officer when manufacturers' documentation is submitted to verify that the fastening devices and door reinforcements are adequate to resist wind

induced stresses. Electric hardware items and access control devices shall be installed in accordance with manufacturer's printed installation procedures.

3.1.2 Door-Closing Devices

Door-closing devices shall be installed and adjusted in accordance with the templates and printed instructions supplied by the manufacturer of the devices. Insofar as practicable, doors opening to or from halls and corridors shall have the closer mounted on the room side of the door.

3.1.4 Kick Plates and Mop Plates

Kick plates shall be installed on the push side of single-acting doors and on both sides of double-acting doors. Mop plates shall be installed on the pull side of the single acting doors.

3.1.5 Auxiliary Hardware

Lever extension flush bolts shall be installed at the top and bottom of the inactive leaf of pairs of doors. The bottom bolt shall operate into a dust-proof floor strike or threshold.

3.1.6 Thresholds

Thresholds shall be secured with a minimum of three fasteners per single door width and six fasteners per double door width with a maximum spacing of 300 mm. Exterior thresholds shall be installed in a bed of sealant with expansion anchors and stainless steel screws, except that bronze or anodized bronze thresholds shall be installed with expansion anchors with brass screws. Minimum screw size shall be No. 10 length, dependent on job conditions, with a minimum of 19 mm thread engagement into the floor or anchoring device used.

3.1.7 Rain Drips

Door sill rain drips shall align with the bottom edge of the door. Overhead rain drips shall align with bottom edge of door frame rabbet. Drips shall be set in sealant and fastened with stainless steel screws.

3.1.8 Weatherseals

Weatherseals shall be located as indicated, snug to door face and fastened in place with color matched metal screws after door and frames have been finish painted. Screw spacing shall be as recommended by manufacturer.

3.1.9 Gasketing

Gasketing shall be installed at the inside edge of the hinge and head and latch sides of door frame. Frames shall be toleranced for a 3 mm clearance between door and frame. Frames shall be treated with tape primer prior to installation.

3.2 OPERATIONAL TESTS

Prior to acceptance of any electrical hardware system, an operational test shall be performed to determine if devices are operating as intended by the specifications. Wiring shall be tested for correct voltage, current carrying capacity, and proper grounding. Stray voltages in lock wiring shall be eliminated to prevent locking devices from releasing in critical situations.

3.3 HARDWARE SETS

		Main Entrance Door
HW-1	3 Pr.	Butts A8112
	1 Ea.	Cylinder as required
	2 Ea.	Door Closers C02041 W/ PT-4C, PT-4F, PT-4H low opening resistance
	1 Ea.	Dust proof strike, L04021
	2 Ea.	Door Stop L02161
	1 Ea.	Threshold J36130
	2 Ea.	Exit Devices Type 6 Function 08
	1 Set	Perimeter Weatherstripping
	1 Ea.	Bottom, 345AV Pemko
	1 Ea.	Door sweep, 345AV Pemko
	2 Ea	Door Pull J402, 12” CTC
	2 Ea	Push Plate J302, 4” x 16”
	1 Ea	Door sweep, 345AV Pemko
		Vestibule Entrance Door
HW-2	3 Pr.	Butts A8112
	1 Ea.	Door Closers C02041 W/ PT-4C, PT-4F, PT-4H low opening resistance
	1 Ea.	Door Stop L02251
	1 Ea.	Threshold J36130
	1 Set	Perimeter Weatherstripping

	1 Ea.	Bottom, 345AV Pemko
	1 Ea.	Door sweep, 345AV Pemko
	2 Ea	Door Pull J402, 12” CTC
	2 Ea	Push Plate J302, 4” x 16”
		Corridor 110 Pr.Exit door
HW-3	3 Pr	Butts A8112
	1 Ea	Lockset F84 Grade 1
	1 Ea	Door Stop L02251
	1 Ea	Kickplate J102
	2 Ea	Exit device, Grade 1, Function 01
	2 Ea	Closer, C02011
	2 Ea	Kickplate, J102B3E
	1 Ea	Perimeter Weatherstripping
	1 Ea	Door sweep, 345AV Pemko
	1 Ea	Door sweep, 345AV Pemko
		Administration 107 Door
HW-4	1 ½ Pr	Butts A8112
	1 Ea	Lock, F05
	1 Ea	Closer C02021
	1 Set	Silencers L03011
	1 Ea	Stop, L12101

	1 Ea	Kickplate, J102B3E

Wt Room & Gym Storage Pr. Doors. 1 ½ Hours at Gym.

HW-5	3 Pr	Butts A8112
	1 Ea	Lockset F14
	1 Ea	Closer C02021
	1 Ea	Kickplate J102
	2 Ea	Door Holders
	1 Ea	Silencers L03011

Corridor 110 Pr Door

HW-6	1 1/2 Pr	Butts A8112
	1 Ea	Lockset F86
	1 Ea	Closer C02021
	1 Ea	Kickplate J102
	2 Ea	Door Holder

Locker Room Doors

HW-7	1 1/2 Pr	Butts A8112
	1 Set	Lever Extension Flush L04081
	1 Ea	Latchset F19, S.S. Lever Handle
	1 Ea	Door Bumper, L32261
	1 Ea	Closer L02021

		Comm Closet Pr. Door
HW-8	3 Pr	Butts A8112
	1 Set	Lever Extension Flush L04081
	1 Ea	Lockset F86
	1 Ea	Overhead Overhead Concealed Stop C01511
	1 Ea	Closer C02021

		Gym. Storage 112 Interior Door. 1 ½ Hours.
HW-9	1 ½ Pr	Butts A8112
	1 Set	Lever Extension Flush L04081
	1 Ea	Lockset F04
	1 Ea	Door Bumper L32261
	1 Ea	Closer C02021

		Gym. Storage 112 Exterior Door
HW-10	1 ½ Pr	Butts A8112
	1 Ea	Lockset F84 Grade 1
	1 Ea	Overhead Overhead Concealed Stop C01511
	1 Ea	Kickplate J102
	1 Ea	Closer, C02011
	2 Ea	Kickplate, J102B3E
	1 Ea	Perimeter Weatherstripping
	1 Ea	Door sweep, 345AV Pemko

Gym. Interior Exit Doors, 1 ½ Hours

HW-11	3 Pr.	Butts A8112
	1 Ea.	Cylinder as required
	2 Ea.	Door Closers C02011
	1 Ea.	Dust proof strike, L04021
	2 Ea.	Overhead Overhead Concealed Stop C01511
	2 Ea.	Exit Devices Type 6 Function 08
	1 Ea.	Door sweep, 345AV Pemko
	2 Ea	Door Pull J402, 12” CTC
	2 Ea	Push Plate J302, 4” x 16”
	1 Ea	Door sweep, 345AV Pemko

Gym. Storage 112 Exterior Door

HW-12	3 Pr	Butts A8112
	1 Ea	Lockset F84 Grade 1
	1 Ea	Overhead Overhead Concealed Stop C01511
	1 Ea	Kickplate J102
	1 Ea	Closer, C02011
	2 Ea	Kickplate, J102B3E
	1 Ea	Perimeter Weatherstripping
	1 Ea	Door sweep, 345AV Pemko

END OF SECTION

This page intentionally blank

SECTION 08810

GLASS AND GLAZING

PART 1 GENERAL

1.1 REFERENCES

The publications listed below form a part of this specification to the extent referenced. The publications are referred to in the text by basic designation only.

AMERICAN NATIONAL STANDARDS INSTITUTE (ANSI)

ANSI Z97.1	(1984; R 1994) Safety Performance Specifications and Methods of Test for Safety Glazing Materials Used in Buildings

AMERICAN SOCIETY FOR TESTING AND MATERIALS (ASTM)

ASTM C 509	(1994) Elastomeric Cellular Preformed Gasket and Sealing Material
ASTM C 669	(1995) Glazing Compounds for Back Bedding and Face Glazing of Metal Sash
ASTM C 864	(1993) Dense Elastomeric Compression Seal Gaskets, Setting Blocks, and Spacers
ASTM C 920	(1995) Elastomeric Joint Sealants
ASTM C 1036	(1991) Flat Glass
ASTM D 395	(1989; R 1994) Rubber Property - Compression Set
ASTM E 773	(1988) Seal Durability of Sealed Insulating Glass Units
ASTM E 774	(1992) Sealed Insulating Glass Units
ASTM E 1300	(1994) Determining the Minimum Thickness and Type of Glass Required to Resist a Specified Load

COMMERCIAL ITEM DESCRIPTION (CID)

CID A-A-378	(Basic) Putty Linseed Oil Type, (for Wood-Sash-Glazing)

GLASS ASSOCIATION OF NORTH AMERICA (GANA)

GANA-01	(1997) Glazing Manual

1.2 SUBMITTALS

Government approval is required for submittals with a "GA" designation; submittals having an "FIO" designation are for information only. The following shall be submitted in accordance with Section 01330 SUBMITTAL PROCEDURES:

SD-01 Data

Glass; FIO. Glazing Accessories; FIO.

Manufacturer's descriptive product data, handling and storage recommendations, installation instructions, and cleaning instructions.

SD-04 Drawings

Glazing Materials and Accessories; FIO.

Drawings showing complete details of the proposed setting methods, mullion details, edge blocking, size of openings, frame details, materials, and types and thickness of glass.

SD-13 Certificates

Glass; FIO.

Certificates stating that the glass meets the specified requirements. Labels or manufacturers marking affixed to the glass will be accepted in lieu of certificates.

SD-14 Samples

Glass; FIO.

Two 203 x 254 mm 8 x 10 inch samples of each of the following: heat-absorbing glass, and insulating glass units.

1.3 SYSTEM DESCRIPTION

Glazing systems shall be fabricated and installed watertight and airtight to withstand thermal movement and wind loading without glass breakage, gasket failure, deterioration of glazing accessories, and defects in the work. Glazed panels shall comply with the safety standards, as indicated in accordance with ANSI Z97.1. Glazed panels shall comply with indicated wind/snow loading in accordance with ASTM E 1300.

1.4 DELIVERY, STORAGE AND HANDLING

Glazing compounds shall be delivered to the site in the manufacturer's unopened containers. Glass shall be stored indoors in a safe, well ventilated dry location in accordance with manufacturer's instructions, and shall not be unpacked until needed for installation. Glass shall not be stored on site over 1 month.

1.5 PROJECT/SITE CONDITIONS

Glazing work shall not be started until outdoor temperature is above 4 degrees C (40 degrees F) and rising, unless procedures recommended by glass manufacturer and approved by Contracting Officer are made to warm the glass and rabbet surfaces. Ventilation shall be provided to prevent condensation of moisture on glazing work during installation. Glazing work shall not be performed during damp or raining weather.

1.6 WARRANTY

1.6.1 Insulating Glass

Manufacturer shall warrant the insulating glass to be free of fogging or film formation on the internal glass surfaces caused by failure of the hermetic seal for a period of 10 years from Date of Substantial Completion. Warranty shall be signed by manufacturer.

PART 2 PRODUCTS

2.1 FLOAT GLASS

2.1.1 Annealed Glass

Annealed glass shall be Type I transparent flat type, Class 1 - clear, Quality q5 - glazing B conforming to ASTM C 1036.

2.2 INSULATING GLASS

Insulating glass shall be Class A pre assembled units of dual-seal construction consisting of lites of glass separated by an aluminum, steel, or stainless steel, spacer and dehydrated space conforming to ASTM E 773 and ASTM E 774. Spacer shall be roll-formed, with bent or tightly welded or keyed and sealed joints to completely seal the spacer periphery and eliminate moisture and hydrocarbon vapor transmission into airspace through the corners. Primary seal shall be compressed polyisobutylene and the secondary seal shall be a specially formulated silicone. Glass types shall be as follows:

2.2.1 Clear Insulating Glass

Glass for two-pane insulating units shall be Type I annealed glass, Class 1 - clear, Quality q5 - glazing B, conforming to ASTM C 1036.

2.2.2 Reflective Insulating Glass

Interior and exterior glass panes for reflective insulating units shall be Type I annealed flat glass, Class 3 - tinted, Quality q3 - glazing select, conforming to ASTM C 1036. Color shall be Eclipse, Dark Bronze.

2.2.3 Low-E Insulating Glass

Interior and exterior glass panes for Low-E insulating units shall be Type I annealed flat glass, Class 1- clear with anti-reflective low-emissivity coating on No. 2 surface (inside surface of exterior pane), Quality q3 - glazing select, conforming to ASTM C 1036.

2.4 HEAT-TREATED GLASS

Heat-treated glass shall conform to the following requirements.

2.4.1 Tempered Glass

Tempered glass shall be kind FT fully tempered transparent flat type, Class 1-clear, Condition A uncoated surface, Quality q3 - glazing select, conforming to ASTM C 1048.

2.5 MIRRORS

2.5.1 Glass Mirrors

Glass for mirrors shall be Type I transparent flat type, Class 1-clear, Glazing Quality q1 6.35 mm (1/4 inch) thick conforming to ASTM C 1036. Glass color shall be clear. Glass shall be coated on one surface with silver coating, copper protective coating, and mirror backing paint. Silver coating shall be highly adhesive pure silver coating of a thickness which shall provide reflectivity of 83 percent or more of incident light when viewed through 6.35 mm (1/4 inch) thick glass, and shall be free of pinholes or other defects. Copper protective coating shall be pure bright reflective copper, homogeneous without sludge, pinholes or other defects, and shall be of proper thickness to prevent "adhesion pull" by mirror backing paint. Mirror backing paint shall consist of two coats of special scratch and abrasion-resistant paint, and shall be baked in uniform thickness to provide a protection for silver and copper coatings which will permit normal cutting and edge fabrication.

2.5.2 Mirror Accessories

2.5.2.1 Mastic

Mastic for setting mirrors shall be a polymer type mirror mastic resistant to water, shock, cracking, vibration and thermal expansion. Mastic shall be compatible with mirror backing paint, and shall be approved by mirror manufacturer.

2.5.2.2 Mirror Frames

Mirrors shall be provided with mirror frames (J-mold channels) fabricated of one-piece roll-formed Type 304 stainless steel with No. 4 brushed satin finish and concealed fasteners which will keep mirrors snug to wall. Frames shall be 31.75 x 6.35 x 6.35 mm (1-1/4 x 1/4 x 1/4 inch) continuous at top and bottom of mirrors. Concealed fasteners of type to suit wall construction material shall be provided with mirror frames.

2.5.2.3 Mirror Clips

Concealed fasteners of type to suit wall construction material shall be provided with clips.

2.6 GLAZING ACCESSORIES

2.6.1 Preformed Tape

Preformed tape shall be elastomeric rubber extruded into a ribbon of a width and thickness suitable for specific application. Tape shall be of type which will remain resilient, have excellent adhesion, and be chemically compatible to glass, metal, or wood.

2.6.2 Sealant

Sealant shall be elastomeric conforming to ASTM C 920, Type S or M, Grade NS, Class 12.5, Use G, of type chemically compatible with setting blocks, preformed sealing tape and sealants used in manufacturing insulating glass. Color of sealant shall be clear.

2.6.3 Glazing Gaskets

Glazing gaskets shall be extruded with continuous integral locking projection designed to engage into metal glass holding members to provide a watertight seal during dynamic loading, building movements and thermal movements. Glazing gaskets for a single glazed opening shall be continuous one-piece units with factory-fabricated injection-molded corners free of flashing and burrs. Glazing gaskets shall be in lengths or units recommended by manufacturer to ensure against pull-back at corners. Glazing gasket profiles shall be as indicated on drawings.

2.6.3.1 Fixed Glazing Gaskets

Fixed glazing gaskets shall be closed-cell (sponge) smooth extruded compression gaskets of cured elastomeric virgin neoprene compounds conforming to ASTM C 509, Type 2, Option 1.

2.6.3.2 Wedge Glazing Gaskets

Wedge glazing gaskets shall be high-quality extrusions of cured elastomeric virgin neoprene compounds, ozone resistant, conforming to ASTM C 864, Option 1, Shore A durometer between 65 and 75.

2.6.3.3 Aluminum Framing Glazing Gaskets

Glazing gaskets for aluminum framing shall be permanent, elastic, non-shrinking, non-migrating, watertight and weathertight.

2.6.4 Putty and Glazing Compound

Glazing compound shall conform to ASTM C 669 for face-glazing metal sash. Putty shall be linseed oil type conforming to CID A-A-378for face-glazing primed wood sash. Putty and glazing compounds shall not be used with insulating glass or laminated glass.

2.6.5 Setting and Edge Blocking

Neoprene setting blocks shall be dense extruded type conforming to ASTM D 395, Method B, Shore A durometer between 70 and 90. Edge blocking shall be Shore A durometer of 50 (+ or - 5). Silicone setting

blocks shall be required when blocks are in contact with silicone sealant. Profiles, lengths and locations shall be as required and recommended in writing by glass manufacturer.

PART 3 EXECUTION

3.1 PREPARATION

Openings and framing systems scheduled to receive glass shall be examined for compliance with approved shop drawings, GANA-01 and glass manufacturer's recommendations including size, squareness, offsets at corners, presence and function of weep system, face and edge clearance requirements and effective sealing between joints of glass-framing members. Detrimental materials shall be removed from glazing rabbet and glass surfaces and wiped dry with solvent. Glazing surfaces shall be dry and free of frost.

3.2 INSTALLATION

Glass and glazing work shall be performed in accordance with approved shop drawings, GANA-01, glass manufacturer's instructions and warranty requirements. Glass shall be installed with factory labels intact and removed only when instructed. Edges and corners shall not be ground, nipped or cut after leaving factory. Springing, forcing or twisting of units during installation will not be permitted.

3.3 CLEANING

Upon completion of project, outside surfaces of glass shall be washed clean and the inside surfaces of glass shall be washed and polished in accordance with glass manufacturer's recommendations.

3.4 PROTECTION

Glass work shall be protected immediately after installation. Glazed openings shall be identified with suitable warning tapes, cloth or paper flags, attached with non-staining adhesives. Reflective glass shall be protected with a protective material to eliminate any contamination of the reflective coating. Protective material shall be placed far enough away from the coated glass to allow air to circulate to reduce heat buildup and moisture accumulation on the glass. Glass units which are broken, chipped, cracked, abraded, or otherwise damaged during construction activities shall be removed and replaced with new units.

END OF SECTION

SECTION 08950

ENGINEERED TRANSLUCENT SKYLIGHT AND WALL SYSTEMS

PART 1 GENERAL

1.1 SCOPE

1.1.1 This section covers the design, manufacture and installation of an insulated Translucent Skylight System. All components shall be the products of the same manufacturer.

1.1.2 Work Included

The Contractor shall supply all labor and materials required to deliver and install the insulated Translucent Skylight System including the following major items:

- Insulated translucent skylight panels
- Battens and perimeter closure system
- Aluminum support structure
- Flashings attached to the translucent skylight panels

1.2 REFERENCES

The publications listed below form a part of this specification to the extent referenced. The publications are referred to in the text by basic designation only.

AMERICAN SOCIETY FOR TESTING AND MATERIALS (ASTM)

ASTM C 236	(1989) Steady-State Thermal Performance of Building Assemblies by Means of a Guarded Hot Box
ASTM C 297	(1994) Flatwise Tensile Strength of Sandwich Constructions
ASTM D 635	(1991) Rate of Burning and/or Extent and Time of Burning of Self-Supporting Plastics in a Horizontal Position
ASTM D 1002	(1994) Apparent Shear Strength of Single-Lap-Joint Adhesively Bonded Metal Specimens by Tension Loading
ASTM D 1037	(1995) Evaluating Properties of Wood-Base Fiber and Particle Panel Materials
ASTM D 1183	(1992) Resistance of Adhesives to Cyclic Laboratory Aging Conditions
ASTM D 1435	(1994) Outdoor Weathering of Plastics
ASTM D 2244	(1993) Calculation of Color Differences from Instrumentally Measured Color

Coordinates

ASTM E 72 (1995) Conducting Strength Tests of Panels for Building Construction

ASTM E 84 (1995; Rev A) Surface Burning Characteristics of Building Materials

ASTM E 330 (1990) Structural Performance of Exterior Windows, Curtain Walls, and Doors by Uniform Static Air Pressure Difference

INTERNATIONAL CONFERENCE OF BUILDING OFFICIALS (ICBO)

ICBO (1994) Uniform Building Code

SOCIETY OF PLASTICS INDUSTRY (SPI)

SPI The Falling Test, Method B; Latest Edition

1.3 GENERAL REQUIREMENTS

1.3.1 Engineered Translucent Skylight Systems shall be manufactured by a company continuously and regularly employed in the manufacture of similar systems for over 10 years and which can show evidence of these systems being satisfactorily used on five projects of similar size, scope and type.

1.3.2 Erection shall be by a qualified commercial glazing installer certified by the manufacturer and that has been in the business of erecting similar systems for at least 5 years and can show evidence of satisfactory completion of projects of similar size and scope.

1.4 SUBMITTALS

Government approval is required for submittals with a "GA" designation; submittals having an "FIO" designation are for information only. The following shall be submitted in accordance with Section 01300 SUBMITTALS:

Drawings

Translucent Skylight System; GA.

Submit shop drawings showing details of translucent skylight system.

Test Reports

Translucent Skylight System; FIO.

The manufacturer shall submit certified test reports, made by an independent testing organization. Reports shall verify that the material will meet all performance requirements of this specification. Test reports required are:

- Flame Spread and Smoke Development (ASTM E 84)
- Burn Extent (ASTM D 635)

- Color Difference (ASTM D 2244)
- Impact Strength (SPI Method B)
- Bond Strength (ASTM C 297 and ASTM D 1002)
- Accelerated Aging (ASTM D 1037)
- Insulated "U" Factor (ASTM C 236)
- Beam Bending Strength (ASTM E 330)

Samples

Translucent Skylight System; GA.

Submit manufacturer's color samples.

Certificates

Guarantee; GA.

Contractor shall submit written guarantee that the products to be furnished are in accordance with or exceed these specifications.

1.4 GUARANTEE

The skylight manufacturer shall furnish a written guarantee after final acceptance against defective design, materials (including metal finish), workmanship and construction for a period of 5 years. Guarantee shall be signed by an officer of the company and shall be for full replacement, including reinstallation costs. Pro-rata warranties for material replacement costs only are not acceptable.

The Contractor and the erector shall jointly furnish a written warranty against leakage due to faulty installation. Warranty shall be for a period of 2 years from substantial completion of the skylight system installation.

1.5 DESIGN REQUIREMENTS

Contractor shall provide an engineered translucent skylight system designed by a Registered Professional Engineer, employed by the Contractor and legally authorized to practice in the jurisdiction where the project is located. Design of skylight system will be based on the criteria indicated in the basic design loads and criteria on the structural drawings and as specified herein. Contractor shall provide all required drawings, diagrams, and calculations for the skylight system including wind loading and pressure diagrams. All drawings, diagrams, and calculations shall bear the seal and signature of the Registered Professional Engineer. The skylight and/or skylight mounting system shall be capable of accommodating a seismically induced relative displacement of 38 mm of the supporting system without damage or distress to the skylight system. Seismic joints in the roof system which intersect the skylight at Grids 1 and 2 shall be incorporated into the design of the skylight.

1.6 DELIVERY, STORAGE, AND HANDLING

Translucent panel system shall be shipped in sturdy wooden crates to protect materials from damage. Store skylight panels on the long edge, several inches above the ground, blocked and in a dry covered area to prevent warping.

PART 2 PRODUCTS

2.1 STRUCTURE

The Contractor shall use services of registered structural engineer to design the ~~Steel~~ steel support members for the translucent panel system and for doors and windows in coordination with the metal building supplier and in accordance with the following: The framing structure shall be fabricated of extruded aluminum using alloy 6063-T5 or 6061-T 6, as required for design loads, and of steel tubing, as suggested on the drawings. Exposed aluminum surfaces shall have the manufacturer's standard polyvinylidene fluoride (PVDF) 70 percent finish. Color shall be as indicated on the drawings.

2.2 TRANSLUCENT FACING

2.2.1 Translucent faces shall be manufactured specifically for architectural use.

2.2.2 Flammability

The interior face sheet shall have a flame spread rating no greater than 20 and smoke development rating no greater than 200 when tested in accordance with ASTM E 84. Burn extent by ASTM D 635 shall be no greater than 25 mm per minute.

2.2.3 Weatherability

- The crystal exterior face sheet shall show no more than 3.0 CIE Lab Units of color difference or 3 Delta E per ASTM D 2244 after 5 years of outdoor weathering in South Florida at 7 degrees Celsius facing south, per ASTM D 1435.

- The exterior face sheet shall have a permanent glass barrier, embedded integrally to . The barrier shall be of .051 mm minimum thickness for maximum protection of weatherability, color stability, and against fiberbloom. The exterior sheet shall be specially formulated with color fast resins to further protect the sheet from color change. This barrier shall be fully field repairable if damaged. Sacrificial plastic surface coatings or films are not acceptable.

2.2.4 Appearance

- The face sheet shall be uniform in color to prevent splotchy appearance.

- Exterior glazing shall be ~~6.35 mm thick and~~ crystal, ~~tempered panel,~~ and interior face sheet shall be ~~6.35 mm thick minimum and~~ white. ~~, laminated glass.~~

- The faces shall be completely free of ridges and wrinkles which prevent proper surface contact in bonding to the aluminum grid core. Clusters of air bubbles and pinholes which collect moisture and dirt will not be acceptable.

2.2.5 Strength

The exterior face sheet shall be uniform in strength and repel an impact equal to 85.42 N-m in accordance with SPI Method B.

2.3 NON-COMBUSTIBLE GRID CORE

2.3.1 The aluminum ~~tube~~ grid core shall be 6063-T6 with provision for mechanical interlocking of muntin-mullion and perimeter to prevent high and low intersections which do not allow full bonding surface to contact with face material. Aluminum ~~tube for the~~ grid shall be machined to tolerances of not greater than -.051 mm. Thickness and temper shall be determined upon the physical performance required to conform with requirements of:

- Loading and deflection.
- Cross sectional configuration.
- Finish.
- Thermal expansion and configuration.

2.4 ADHESIVE

2.4.1 The laminate adhesive shall be heat and pressure type engineered for structural sandwich panel use. Minimum strength shall be:

2.4.2 5,168 kPa tensile strength by ASTM C 297 before and after two exposures to six cycles each of the aging conditions prescribed by ASTM D 1037.

2.4.3 4,793 kPa sheer strength average of all five separate exposures by ASTM D 1002.

- 50 percent relative humidity at 23 degrees C.
- Accelerated aging by ASTM D 1183.
- 83 degrees C.
- Full Cycle Soak

2.4.4 The color of the bond shall be black.

2.5 PANEL CONSTRUCTION

2.5.1 Skylight panels shall have a minimum thickness of 70mm. The minimum air space between exterior panel and interior panel shall be 12.7 mm.

2.5.2 The profile shall be as indicated on the drawings.

2.5.3 Translucent sandwich panel deflection shall not exceed 1/44 in horizontal plane per ASTM E 72.

2.5.4 Grid pattern shall be nominal 305 mm by 610 mm shoji.

2.5.5 The adhesive bonding line shall be straight, cover the entire width of the tube and have a neat, sharp edge. In order to ensure bonding strength, white spots at intersections of muntins and mullions shall not exceed 4 for each 3.716 square m of panel, nor shall they be more than 1.19 mm in width.

2.5.6 Setting blocks shall be 80 +/- durometer, black silicone.

2.5.7 Flashing shall be minimum 1mm thick aluminum with thickness as required to maintain flatness and with finish matching other components.

2.5.8 Add section 2.5.8 to include a U-value of panels to be 0.29 for headed spaces.

2.6 BATTENS AND PERIMETER CLOSURE SYSTEMS

2.6.1 Extruded 6063-T6 and 6063-T5 aluminum screw clamp-tight closure system.

2.6.2 All battens and perimeter closures to be supplied with No. 410 Type A, stainless steel screws (excluding final fasteners to the building, such as power driven fasteners and lag bolts).

2.6.3 Exposed aluminum surfaces shall have the manufacturer's standard PVDF, fluropolymer finish or acrylic urethane finish conforming to AAMA 605.2-91.

2.6.4 Receiving channels for self-tapping stainless steel screws to be continuous the length of each member and extruded as part of the member.

2.7 FLEXIBLE SEALING TAPE

2.7.1 Sealing tape shall be manufacturer's standard preapplied to closure system at the factory under controlled conditions.

~~2.8 GLAZING GASKETS~~

~~Glazing gaskets shall be silicone, santoprene or neoprene with the following requirements:~~

~~a. Hardness: 50 +/- 5 durometer shore A.~~

~~- Tensile Strength: 800.~~

~~- Elongation: 200 percent.~~

~~- Color: black.~~

~~c. Compression Set: 20 percent in 22 hours at 100 degrees C.~~

~~e. Heat Aging Characteristics after 70 hours at 100 degrees C:~~

~~- Hardness Change: + 3 percent.~~

~~- Tensile Change: - 10 percent.~~

~~Elongation Change: 20 percent.~~

~~g. Weather Resistance: 1 part ozone per million, 500 hours at 20 percent elongation to show no cracks.~~

~~e. Material to have no sissal checks, cracks, or breaks after tests are completed~~

PART 3 EXECUTION

3.1 PREPARATION

3.1.1 The Contractor shall prepare the opening, including isolating dissimilar materials from aluminum systems which may cause damage by electrolysis.

3.1.2 The Contractor shall install a structural curb designed to withstand the thrust generated by the skylight.

3.2 ERECTION

3.2.1 The Contractor shall erect translucent skylight system in strict accordance with approved shop drawings. Fastenings and sealing shall be done in strict accordance with manufacturer's shop drawings. All aluminum shall be cleaned before sealants are applied.

3.2.2 After other trades have completed work on adjacent material, carefully inspect translucent panel installation and make adjustments necessary to ensure proper installation and weathertight conditions.

3.2.3 All staging, lifts, and hoists required for the complete insulated translucent skylight system installation, including staging, etc., necessary for field measuring, shall be provided by, set up and maintained by the Contractor.

3.3 CLEANING, PROTECTION AND TOUCH-UP

3.3.1 Damaged Units

Replace components of the work that have been damaged or have deteriorated beyond successful repair by means of finish touch-up or similar minor repair procedures.

3.3.2 Immediately upon detection, abraded spots on shop-painted surfaces shall be cleaned and touched up with the same material used for the shopcoat. Factory color finished surfaces shall be touched up as necessary with the manufacturer's recommended touch up paint.

3.3.3 Cleaning

Remove temporary protective coverings and strippable films (if any) as soon as each skylight is installed. Upon completion of skylight installation, clean finished surfaces as recommended by skylight manufacturer, and maintain in a clean condition through the end of construction.

END OF SECTION

SECTION 09250

GYPSUM WALLBOARD

PART 1 GENERAL

1.1 REFERENCES

The publications listed below form a part of this specification to the extent referenced. The publications are referred to in the text by basic designation only.

AMERICAN SOCIETY FOR TESTING AND MATERIALS (ASTM)

ASTM C 36	(1997) Gypsum Wallboard
ASTM C 79	(1995) Gypsum Sheathing Board
ASTM C 475	(1994) Joint Compound and Joint Tape for Finishing Gypsum Board
ASTM C 514	(1996) Nails for the Application of Gypsum Board
ASTM C 557	(1993a) Adhesive for Fastening Gypsum Wallboard to Wood Framing
ASTM C 630/C 630M	(1996a) Water-Resistant Gypsum Backing Board
ASTM C 645	(1996a) Nonstructural Steel Framing Members
ASTM C 754	(1997) Installation of Steel Framing Members to Receive Screw-Attached Gypsum Panel Products
ASTM C 840	(1996) Application and Finishing of Gypsum Board
ASTM C 1002	(1996a) Steel Drill Screws for the Application of Gypsum Board or Metal Plaster Bases
ASTM C 1047	(1995) Accessories for Gypsum Wallboard and Gypsum Veneer Base

GYPSUM ASSOCIATION (GA)

GA 216	(1996) Application and Finishing of Gypsum Board
GA 600	(1997) Fire Resistance Design Manual

UNDERWRITERS LABORATORIES (UL)

UL Fire Resist Dir	(1998) Fire Resistance Directory

1.2 SYSTEM DESCRIPTION

1.2.1 Fire-Rated Construction

Joints of fire-rated gypsum board enclosures shall be closed and sealed in accordance with UL test requirements or GA requirements, and as required to meet pressurization requirements. Penetrations through rated partitions and ceilings shall be sealed tight in accordance with tested systems. Fire ratings shall be as indicated.

1.3 SUBMITTALS

Government approval is required for submittals with a "GA" designation; submittals having an "FIO" designation are for information only. The following shall be submitted in accordance with Section 01330 SUBMITTAL PROCEDURES:

SD-04 Drawings

Steel Framing; FIO. Control Joints; FIO. Fire-Resistant Assemblies; FIO.

Drawings and installation details for ceiling framing, furring, special wall framing, and framed openings in walls and ceilings.

SD-13 Certificates

Gypsum Wallboard; FIO. Water-Resistant Gypsum Board; FIO. Steel Framing; FIO. Fire-Rated Gypsum Board; FIO.

Certificates stating that the steel framing and gypsum wallboard meet the specified requirements.

SD-14 Samples

1.4 QUALIFICATIONS

Manufacturer shall specialize in manufacturing the types of material specified and shall have a minimum of 10 years of documented successful experience. Installer shall specialize in the type of gypsum board work required and shall have a minimum of 5 years of documented successful experience.

1.5 DELIVERY, STORAGE AND HANDLING

Materials shall be delivered in original containers bearing the name of manufacturer, contents, and brand name. Materials shall be stored off the ground in a weather tight structure for protection. Gypsum boards shall be stacked flat, off floor and supported to prevent sagging and warpage. Adhesives and joint materials shall be stored in accordance with manufacturer's printed instructions. Damaged or deteriorated materials shall be removed from jobsite.

1.6 ENVIRONMENTAL CONDITIONS

Environmental conditions for application and finishing of gypsum board shall be in accordance with ASTM C 840. During the application of gypsum board without adhesive, a room temperature of not less than 4 degrees C (40 degrees F) shall be maintained. During the application of gypsum board with adhesive, a room temperature of not less than 10 degrees C (50 degrees F) shall be maintained for 48 hours prior to application and continuously afterwards until completely dry. Building spaces shall be ventilated to remove water not required for drying joint treatment materials. Drafts shall be avoided during dry hot weather to prevent materials from drying too rapidly.

PART 2 MATERIALS

2.1 NON-LOADBEARING STUD WALLS

2.1.1 Studs

Studs for non-loadbearing walls shall conform to ASTM C 645. Studs shall be C-shaped, roll formed steel with minimum uncoated design thickness of 0.48 mm (0.0179 inch) made from G40 hot-dip galvanized coated sheet.

2.2 GYPSUM BOARD

Gypsum board shall have square-cut ends, tapered or beveled edges and shall be maximum possible length. Gypsum board thickness shall be as shown.

2.2.1 Standard Gypsum Board

Regular gypsum board shall conform to ASTM C 36, and shall be 1200 mm (48 inches) wide.

2.2.2 Fire-Rated Gypsum Board

Fire-rated gypsum board shall conform to ASTM C 36, and shall be Type X or Type C as required, 1200 mm (48 inches) wide.

2.2.3 Water-Resistant Gypsum Board

Water-resistant gypsum board shall conform to ASTM C 630/C 630M, Type X, with water-resistant paper faces, paintable surfaces, and shall be 1200 mm (48 inches) width and maximum permissible length.

2.2.4 Exterior Sheathing Board

Exterior sheathing board shall conform to ASTM C 79, Type X, shall have water-resistant core, water-repellant paper faces each side, with square edges and 1200 mm (48 inches) wide.

2.3 TRIM, MOLDINGS, AND ACCESSORIES

2.3.1 Taping and Embedding Compound

Taping and embedding compound shall conform to ASTM C 475. Compound shall be specifically formulated and manufactured for use in embedding tape at gypsum wallboard joints and fastener heads, and shall be compatible with tape and substrate.

2.3.2 Finishing or Topping Compound

Finishing or topping compound shall conform to ASTM C 475. Compound shall be specifically formulated and manufactured for use as a finishing compound for gypsum board.

2.3.3 All-Purpose Compound

All-purpose compound shall be specifically formulated and manufactured to use as a taping and finishing compound, and shall be compatible with tape and substrate.

2.3.4 Joint Tape

Joint tape shall conform to ASTM C 475 and shall be as recommended by gypsum board manufacturer.

2.3.5 Trim, Control Joints, Beads, Stops and Nosings

Items used to protect edges, corners, and to provide architectural features shall be in accordance with ASTM C 1047.

2.4 FASTENINGS AND ADHESIVES

2.4.1 Nails

Nails shall conform to ASTM C 514. Nails shall be hard-drawn low or medium-low carbon steel, suitable for intended use.

2.4.2 Screws

Screws shall conform to ASTM C 1002. Screws shall be self-drilling and self-tapping steel, Type S for wood or light-gauge steel framing.

2.4.3 Adhesives

Adhesives shall conform to ASTM C 557. Adhesives shall be formulated to bond gypsum board to wood framing members. For securing gypsum board to metal framing, adhesive shall be as recommended by gypsum board manufacturer.

PART 3 EXECUTION

3.1 INTERIOR WALL FRAMING

Steel framing and furring members shall be installed in accordance with ASTM C 754. Members shall be in alignment with spacings not to exceed the maximum spacings indicated on drawings. Runners shall be aligned accurately at the floor and ceiling and securely anchored.

3.1.1 Wall Openings

The framing system shall provide for the installation and anchorage of the required subframes or finish frames for wall openings at doors, pass-through openings, and access panels. Partitions abutting continuous suspended ceilings shall be strengthened for rigidity at rough openings of more than 750 mm (30 inches) wide. Studs at openings shall be 0.84 mm (0.0329 inch) minimum bare metal thickness and spot grouted at jamb anchor inserts. Double studs shall be fastened together with screws and secured to floor and overhead runners. Two studs shall be used for framing at all doors and relites.

3.1.2 Wall Control Joints

Control joints for expansion and contraction in the walls shall be constructed with double studs installed 12.7 mm (1/2 inch) apart in interior walls or wall furrings where indicated on drawings. Control joint spacing shall not exceed 9 144 mm (30 feet). Ceiling-height door frames may be used as vertical control joints. Door frames of less than ceiling height may be used as control joints only if standard control joints extend to ceiling from both corners of top of door frame. Control joints between studs shall be filled with firesafing insulation in fire rated partitions.

3.2 SUSPENDED CEILING FRAMING

Suspended ceiling system framing shall be installed in accordance with ASTM C 754.

3.2.1 Hangers

Hangers shall be spaced not more than 1 219.2 mm (48 inches) along runner channels and 914.4 mm (36 inches) in the other direction or1 066.8 mm (42 inches) in both directions unless otherwise indicated. Locations of hanger wires shall be coordinated with other work. Hangers at ends of runner channels shall be located not more than 152.4 mm (6 inches) from wall. Hanger wire shall be looped around bottom chord of open-web steel joists, or secured to structural elements with suitable fasteners. Sags or twists which develop in the suspended system shall be adjusted. Damaged or faulty parts shall be replaced.

3.2.2 Main Runners

Main runner channels shall be installed in accordance with ASTM C 754. Hanger wires shall be double strand saddle-tied to runner channels and the ends of hanger wire shall be twisted three times around itself. Main runners shall be located to within 152.4 mm (6 inches) of the paralleling wall to support the ends of cross furring. Main runners shall not come in contact with abutting masonry or concrete walls. Where main runners are spliced, ends shall be overlapped 304.8 mm

(12 inches) with flanges of channels interlocked, and shall be securely tied at each end of splice with wire looped twice around the channels.

3.2.3 Furring Channels

Furring channels shall be spaced in accordance with ASTM C 754. Furring channels shall be secured to the runner channels and to structural supports at each crossing with tie wire, hairpin clips, or equivalent fastenings. Furring channels shall be located within 50.8 mm (2 inches) of parallel walls and beams, and shall be cut 12.7 mm (1/2 inch) short of abutting walls.

3.2.4 Ceiling Openings

Support members shall be provided as required at ceiling openings for access panels, recessed light fixtures, and air supply or exhaust. Support members shall be not less than 38.1 mm (1-1/2 inch) main runner channels and vertically installed suspension wires or straps shall be located to provide at least the minimum support specified herein for furring and wallboard attachment. Intermediate structural members not a part of the structural system, shall be provided for attachment or suspension of support members.

3.2.5 Light Fixtures and Air Diffusers

Light fixtures and air diffusers shall be supported directly from suspended ceiling runners. Wires shall be provided at appropriate locations to carry the weight of recessed or surface mounted light fixtures and air diffusers.

3.2.6 Control Joints

Ceiling control joints for expansion and contraction shall be located where indicated on drawings. A control joint or intermediate blocking shall be installed where ceiling framing members change direction.

3.3 APPLICATION OF GYPSUM BOARD

Gypsum board shall be installed in accordance with ASTM C 840 and GA 216 and as specified. Paragraph 17.3.1 GENERAL of ASTM C 840 which permits usage of water resistant gypsum board as a base for adhesive application of ceramic or plastic tile on ceilings, does not apply. Edges and ends of gypsum boards shall be cut to obtain neat fitting joints. End joints of adjoining boards shall be staggered, and shall be staggered on opposite sides of wall. Boards shall be applied with moderate contact without forcing in place. Holes for pipes, fixtures or other small openings shall be cut with a tool which will provide a neat fit. Screws shall be driven so that the heads are slightly below the plane of paper face. Fracturing the paper face or damaging the core shall be avoided. Trim shall be installed at external and internal angles formed by the intersecting gypsum board surfaces with other surfaces. Corner beads shall be installed to vertical and horizontal corners in accordance with manufacturer's published instructions.

3.3.1 Water-Resistant Gypsum Board

Water-resistant gypsum board shall be installed at the locations indicated.

3.3.2 Adhesively-Applied Gypsum Board

Walls scheduled to receive adhesively-applied gypsum board shall be dry, free of dust, oil, or form release agents, protrusions or voids, or foreign matter that would affect a proper bond.

3.4 TRIM, MOLDINGS, AND ACCESSORIES INSTALLATION

Trim, moldings and accessories shall be installed in accordance with GA 216.

3.5 TAPING AND FINISHING

Gypsum board taping and finishing shall be performed in accordance with ASTM C 840. Boards shall be kept free of dirt, oil and other foreign matter that could cause a lack of bond. Screw heads, dents, gouges, and cut-outs shall be filled with joint compound and sanded. Accessories at exposed joints, edges, corners, openings, and similar locations shall be taped, floated with joint compound, and sanded to produce surfaces ready for gypsum board finishes. Finish for all interior spaces shall be Level 5 as defined by ASTM C 840.

3.6 FIRE-RESISTANT ASSEMBLIES

Gypsum wallboard construction for fire-rated assemblies shall be in accordance with UL Fire Resist Dir, or GA 600 for the design number indicated on drawings.

3.7 PATCHING

Surface defects and damage shall be corrected as required to leave gypsum board smooth, uniform in appearance, and ready to receive finish as specified.

END OF SECTION

This page intentionally blank

SECTION 09310

CERAMIC TILE

PART 1 GENERAL

1.1 REFERENCES

The publications listed below form a part of this specification to the extent referenced. The publications are referred to in the text by basic designation only.

AMERICAN NATIONAL STANDARDS INSTITUTE (ANSI)

ANSI A108.1A	(1992) Installation of Ceramic Tile in the Wet-Set Method, with Portland Cement Mortar
ANSI A108.1B	(1992) Installation of Ceramic Tile on a Cured Portland Cement Mortar Setting Bed with Dry-Set or Latex Portland Cement Mortar
ANSI A108.4	(1992) Installation of Ceramic Tile with Organic Adhesives or Water Cleanable Tile Setting Epoxy Adhesive
ANSI A108.5	(1992) Installation of Ceramic Tile with Dry-Set Portland Cement Mortar or Latex-Portland Cement Mortar
ANSI A108.6	(1992) Installation of Ceramic Tile with Chemical Resistant, Water Cleanable Tile-Setting and Grouting Epoxy
ANSI A108.10	(1992) Installation of Grout in Tilework
ANSI A108.11	(1992) Interior Installation of Cementitious Backup Units
ANSI A118.1	(1992) Dry-Set Portland Cement Mortar
ANSI A118.4	(1992) Latex-Portland Cement Mortar
ANSI A118.6	(1992) Ceramic Tile Grouts
ANSI A118.9	(1992) Test Methods and Specifications for Cementitious Backer Units
ANSI A136.1	(1992) Organic Adhesives for Installation of Ceramic Tile
ANSI A137.1	(1988) Ceramic Tile

AMERICAN SOCIETY FOR TESTING AND MATERIALS (ASTM)

ASTM A 185	(1994) Steel Welded Wire Fabric, Plain, for Concrete Reinforcement
ASTM C 33	(1997) Concrete Aggregates
ASTM C 144	(1993) Aggregate for Masonry Mortar
ASTM C 150	(1997) Portland Cement
ASTM C 206	(1984; R 1992) Finishing Hydrated Lime
ASTM C 207	(1991; R 1992) Hydrated Lime for Masonry Purposes
ASTM C 241	(1990) Abrasion Resistance of Stone Subjected to Foot Traffic
ASTM C 373	(1988; R 1994) Water Absorption, Bulk Density, Apparent Porosity, and Apparent Specific Gravity of Fired Whiteware Products
ASTM C 648	(1984; R 1994) Breaking Strength of Ceramic Tile
ASTM C 1026	(1987; R 1996) Measuring the Resistance of Ceramic Tile to Freeze-Thaw Cycling
ASTM C 1027	(1984; R 1990) Determining Visible Abrasion Resistance of Glazed Ceramic Tile
ASTM C 1028	(1996) Determining the Static Coefficient of Friction of Ceramic Tile and Other Like Surfaces by the Horizontal Dynamometer Pull-Meter Method

MARBLE INSTITUTE OF AMERICA (MIA)

MIA-01	(1991) Design Manual IV Dimensional Stone

NATIONAL FIRE PROTECTION ASSOCIATION (NFPA)

NFPA 99	(1996; Errata) Health Care Facilities

TILE COUNCIL OF AMERICA (TCA)

TCA-01	(1997) Handbook for Ceramic Tile Installation

1.2 SUBMITTALS

Government approval is required for submittals with a "GA" designation; submittals having an "FIO" designation are for information only. The following shall be submitted in accordance with Section 01330 SUBMITTAL PROCEDURES:

SD-01 Data

Tile; FIO. Setting-Bed; FIO. Mortar, Grout, and Adhesive; FIO.

Manufacturer's catalog data.

SD-06 Instructions

Tile; FIO. Mortar and Grout; FIO.

Manufacturers preprinted installation and cleaning instructions.

SD-09 Reports

Testing; FIO.

Copy of results for electrical resistance tests.

SD-13 Certificates

Tile; FIO. Mortar, Grout, and Adhesive; FIO.

Certificates indicating conformance with specified requirements. A master grade certificate shall be furnished for tile.

SD-14 Samples

Tile; FIO. Accessories; FIO. Marble Thresholds; FIO.

Samples of sufficient size to show color range, pattern, type and joints.

1.3 DELIVERY AND STORAGE

Materials shall be delivered to the project site in manufacturer's original unopened containers with seals unbroken and labels and hallmarks intact. Materials shall be kept dry, protected from weather, and stored under cover in accordance with manufacturer's instructions.

1.4 ENVIRONMENTAL REQUIREMENTS

Ceramic tile work shall not be performed unless the substrate and ambient temperature is at least 50 degrees F and rising. Temperature shall be maintained above 50 degrees F while the work is being performed and for at least 7 days after completion of the work. When temporary heaters are used they shall be vented to the outside to avoid carbon dioxide damage to new tilework.

1.5 WARRANTY

Manufacturer's standard performance guarantees or warranties that extend beyond a 1-year period shall be provided.

PART 2 PRODUCTS

2.1 TILE

Tile shall be standard grade conforming to ANSI A137.1. Containers shall be grade sealed. Seals shall be marked to correspond with the marks on the signed master grade certificate. Tile shall be impact resistant with a minimum breaking strength for wall tile of 40.86 kg (90 lbs) and 113.5 kg (250 lbs) for floor tile in accordance with ASTM C 648. Tile for cold climate projects shall be rated frost resistant by the manufacturer as determined by ASTM C 1026. Water absorption shall be 0.50 maximum percent in accordance with ASTM C 373. Floor tile shall have a minimum coefficient of friction of 0.50 wet and dry in accordance with ASTM C 1028. Floor tile shall be Class III-Medium Heavy Traffic, durability classification as rated by the manufacturer when tested in accordance with ASTM C 1027 for abrasion resistance as related to foot traffic.

2.1.1 Mosaic Tile

Ceramic mosaic tile and trim shall be unglazed porcelain with sharply formed face. Tile size shall be 25.4 x 25.4 mm (1 x 1 inch). Color shall be in accordance with the Color Schedule in the drawings.

2.1.2 Quarry Tile

Quarry tile and trim shall be unglazed with smooth surface. Tile shall be 152.4 x 152.4 x 12.7 mm (6 x 6 x 1/2 inch). Color shall be in accordance with the Color Schedule in the drawings.

2.1.3 Glazed Wall Tile

Glazed wall tile and trim shall be cushion edged with bright glaze. Tile shall be 107.96 x 107.95 mm (4-1/4 x 4-1/4 inches). Color shall be in accordance with the Color Schedule on the drawings.

2.2 SETTING-BED

The setting-bed shall be composed of the following:

2.2.1 Aggregate for Concrete Fill

Aggregate shall conform to ASTM C 33. Maximum size of coarse aggregate shall not be greater than one-half the thickness of concrete fill.

2.2.2 Portland Cement

Cement shall conform to ASTM C 150, Type I, white for wall mortar and gray for other uses.

2.2.3 Sand

Sand shall conform to ASTM C 144.

2.2.4 Hydrated Lime

Hydrated lime shall conform to ASTM C 206, Type S or ASTM C 207, Type S.

2.2.5 Reinforcing Wire Fabric

Wire fabric shall conform to ASTM A 185. Wire shall be either 50.8 x 50.8 mm (2 x 2 inch) mesh, 16/16 wire or 38.1 x 50.8 mm (1-1/2 x 2 inch) mesh, 16/13 wire.

2.3 WATER

Water shall be potable.

2.4 MORTAR, GROUT, AND ADHESIVE

Mortar, grout, and adhesive shall conform to the following:

2.4.1 Dry-Set Portland Cement Mortar

ANSI A118.1.

2.4.2 Latex-Portland Cement Mortar

ANSI A118.4.

2.4.3 Ceramic Tile Grout

ANSI A118.6; Latex-portland cement grout (commercial) a preblended compound of portland cement, selected and graded aggregate, color pigments and chemical additives gaged with latex grout additive to make water resistant grout joints.

2.4.4 Organic Adhesive

ANSI A136.1, Type I.

2.4.5 Cementitious Backer Board

Cementitious backer units shall comply with ANSI A118.9.

2.5 MARBLE THRESHOLDS

Marble thresholds shall be of size required by drawings or conditions. Marble shall be Group A as classified by MIA-01. Marble shall have a fine sand-rubbed finish and shall be gray in color as approved by the Contracting Officer. Marble abrasion shall be not less than 12.0 when tested in accordance with ASTM C 241.

PART 3 EXECUTION

3.1 PREPARATORY WORK AND WORKMANSHIP

Surface to receive tile shall be inspected and shall conform to the requirements of ANSI A108.1A or ANSI A108.1B for surface conditions for the type setting bed specified and for workmanship. Variations of surface to be tiled shall fall within maximum values shown below:

TYPE	WALLS	FLOORS
Dry-Set Mortar	3 mm in 2.4 meters	3.0 mm in 3 meters
Organic Adhesives	3 mm in 2.4 meters	1.5 mm in 1 meters
Latex portland cement mortar	3 mm in 2.4 meters	3.0 mm in 3 meters
Epoxy	3 mm in 2.4 meters	3.0 mm in 3 meters

TYPE	WALLS	FLOORS
Dry-Set Mortar	1/8 inch in 8 ft.	1/8 inch in 10 ft.
Organic Adhesives	1/8 inch in 8 ft.	1/16 inch in 3 ft.
Latex portland cement mortar	1/8 inch in 8 ft.	1/8 inch in 10 ft.
Epoxy	1/8 inch in 8 ft.	1/8 inch in 10 ft.

3.2 GENERAL INSTALLATION REQUIREMENTS

Tile work shall not be started until roughing in for mechanical and electrical work has been completed and tested, and built-in items requiring membrane waterproofing have been installed and tested. Floor tile installation shall not be started in spaces requiring wall tile until after wall tile has been installed. Tile in colors and patterns indicated shall be applied in the area shown on the drawings. Tile shall be installed with the respective surfaces in true even planes to the elevations and grades shown. Special shapes shall be provided as required for sills, jambs, recesses, offsets, external corners, and other conditions to provide a complete and neatly finished installation. Tile bases and coves shall be solidly backed with mortar.

3.3 INSTALLATION OF WALL TILE

Wall tile shall be installed in accordance with the TCA-01, method W243 for dry areas, method W244 for wet areas.

3.3.1 Dry-Set Mortar and Latex-Portland Cement Mortar

Latex-portland cement shall be used to install tile in accordance with ANSI A108.5. Latex portland cement shall be used when installing porcelain ceramic tile.

3.3.3 Organic Adhesive

Organic adhesive installation of ceramic tile shall conform to ANSI A108.4.

3.4 INSTALLATION OF FLOOR TILE

Floor tile shall be installed in accordance with TCA-01, method F112-95. Shower receptors shall be installed in accordance with TCA-01, method B415.

3.4.1 Workable or Cured Mortar Bed

Floor tile shall be installed over a workable mortar bed or a cured mortar bed at the option of the Contractor. Workable mortar bed materials and installation shall conform to ANSI A108.1A. Cured mortar bed and materials shall conform to ANSI A108.1B. Joints between quarry tile shall be between 1/4 inch and 3/8 inch in width and shall be uniform in width.

3.4.2 Dry-Set and Latex-Portland Cement

Latex-portland cement mortar shall be used to install tile directly over properly cured, plane, clean concrete slabs in accordance with ANSI A108.5. Latex portland cement shall be used when installing porcelain ceramic tile.

3.4.3 Resinous Grout

When resinous grout is indicated, quarry tile shall be grouted with either furan or epoxy resin grout. Joints shall be raked and cleaned to the full depth of the tile and neutralized when recommended by the resin manufacturer. Epoxy resin grout shall be installed in conformance with ANSI A108.6. Furan resin grout shall be installed in accordance with manufacturer's instructions. Tile installed with furan resin shall be coated with wax by the tile manufacturer. Installation of resin grout shall be in strict accordance with manufacturer's instructions for proportioning, mixing, installing, and curing. Recommended temperature shall be maintained in the area and on the surface to be grouted. After grouting, tile shall be left free of grout stain.

3.4.4 Ceramic Tile Grout

Ceramic Tile grout shall be prepared and installed in accordance with ANSI A108.10.

3.4.5 Waterproofing

Shower pans are specified in Section 15400 PLUMBING, GENERAL PURPOSE. Waterproofing under concrete fill shall conform to the requirements of Section 07112 BITUMINOUS WATERPROOFING.

3.4.6 Concrete Fill

Concrete fill shall be composed by volume of 1 part portland cement to 3 parts fine aggregate to 4 parts coarse aggregate, and mixed with water to as dry a consistency as practicable. The fill shall be spread, tamped, and screeded to a true plane, and pitched to drains or leveled as shown. Concrete fill shall be thoroughly damp cured before application of setting-bed material . Concrete fill shall be reinforced with one layer of reinforcement, with the uncut edges lapped the width of one mesh and the cut ends and edges lapped not less than 50.8 mm (2 inches). Laps shall be tied together with 1.31 mm (18 gauge) wire every 254 mm (10 inches) along the finished edges and every 152.4 mm (6 inches) along the cut ends and edges. The reinforcement shall be supported and secured in the centers of concrete fills. The mesh shall be continuous; except where expansion joints occur, mesh shall be cut and discontinued across such joints.

3.4.7 Cementitious Backer Board

Cementitious backer units shall be installed in accordance with ANSI A108.11. Fasteners shall be type designed for cement board application.

3.5 INSTALLATION OF MARBLE THRESHOLDS

Thresholds shall be installed where indicated in a manner similar to that of the ceramic tile floor. Thresholds shall be the full width of the opening. Head joints at ends shall not exceed 6.35 mm (1/4 inch) in width and shall be grouted full as specified for ceramic tile.

3.6 TESTING

Electrical resistance tests shall be performed on conductive flooring in the presence of the Contracting Officer by a technician experienced in such work and a copy of the test results shall be furnished. Test procedures, testing apparatus, and test results shall be in accordance with the provisions for Conductive Flooring in NFPA 99.

3.7 EXPANSION JOINTS

Joints shall be formed as indicated and sealed as specified in Section 07920 JOINT SEALING.

3.7.1 Walls

Expansion joints shall be provided at control joints in backing material. Wherever backing material changes, an expansion joint shall be installed to separate the different materials.

3.7.2 Floors

Expansion joints shall be provided over construction joints, control joints, and expansion joints in concrete slabs. Expansion joints shall be provided where tile abuts restraining surfaces such as perimeter walls, curbs and columns and at intervals of 7 315.21 to 10 972.83 mm (24 to 36 feet) each way in large interior floor areas and 3 657.6 to 4 876.8 mm (12 to 16 feet) each way in large exterior areas or areas exposed to direct sunlight or moisture. Expansion joints shall extend through setting-beds and fill.

3.8 CLEANING AND PROTECTING

Upon completion, tile surfaces shall be thoroughly cleaned in accordance with manufacturer's approved cleaning instructions. Acid shall not be used for cleaning glazed tile. Floor tile with resinous grout or with factory mixed grout shall be cleaned in accordance with instructions of the grout manufacturer. After the grout has set, tile wall surfaces shall be given a protective coat of a noncorrosive soap or other approved method of protection. Tiled floor areas shall be covered with building paper before foot traffic is permitted over the finished tile floors. Board walkways shall be laid on tiled floors that are to be continuously used as passageways by workmen. Damaged or defective tiles shall be replaced.

END OF SECTION

This page intentionally blank

SECTION 09510

ACOUSTICAL CEILINGS

PART 1 GENERAL

1.1 REFERENCES

The publications listed below form a part of this specification to the extent referenced. The publications are referred to in the text by basic designation only.

AMERICAN SOCIETY FOR TESTING AND MATERIALS (ASTM)

ASTM C 635	(1995) Manufacture, Performance, and Testing of Metal Suspension Systems for Acoustical Tile and Lay-In Panel Ceilings
ASTM C 636	(1996) Installation of Metal Ceiling Suspension Systems for Acoustical Tile and Lay-In Panels
ASTM E 119	(1995a) Fire Tests of Building Construction and Materials
ASTM E 1264	(1990) Standard Classification for Acoustical Ceiling Products
ASTM E 1414	(1991a) Standard Test for Airborne Sound Attenuation Between Rooms Sharing a Common Ceiling Plenum

UNDERWRITERS LABORATORIES (UL)

UL Fire Resist Dir	(1998) Fire Resistance Directory (2 Vol)

1.2 GENERAL REQUIREMENTS

Acoustical treatment shall consist of sound controlling units mechanically mounted on a ceiling suspension system. The unit size, texture, finish, and color shall be as specified. The Contractor has the option to substitute inch-pound (I-P) Recessed Light Fixtures (RLF) for metric RLF. If the Contractor opts to furnish I-P RLF, other ceiling elements like acoustical ceiling tiles, air diffusers, air registers and grills, shall also be I-P products. The Contractor shall coordinate the whole ceiling system with other details, like the location of access panels and ceiling penetrations, etc., shown on the drawings. If I-P products are used, the Contractor shall be responsible for all associated labor and materials and for the final assembly and performance of the specified work and products. The location and extent of acoustical treatment shall be as shown on the drawings.

1.3 SUBMITTALS

Government approval is required for submittals with a "GA" designation; submittals having an "FIO" designation are for information only. The following shall be submitted in accordance with Section 01330 SUBMITTAL PROCEDURES:

SD-01 Data

Acoustical Ceiling System; FIO.

Manufacturer's descriptive data, catalog cuts, and installation instructions.

SD-04 Drawings

Acoustical Ceiling System; FIO.

Drawings showing suspension system, method of anchoring and fastening, details, and reflected ceiling plan.

SD-09 Reports

Fire Resistive Ceilings; FIO. Ceiling Attenuation Class and Test; FIO.

Reports by an independent testing laboratory attesting that acoustical ceiling systems meet specified fire endurance and sound transmission requirements. Data attesting to conformance of the proposed system to Underwriters Laboratories requirements for the fire endurance rating listed in UL Fire Resistance Directory may be submitted in lieu of test reports.

SD-13 Certificates

Acoustical Units; FIO.

Certificate attesting that the mineral based acoustical units furnished for the project contains recycled material and showing an estimated percent of such material.

SD-14 Samples

Acoustical Units; FIO.

Two samples of each type of acoustical unit and each type of suspension grid tee section showing texture, finish, and color.

1.4 DELIVERY AND STORAGE

Materials shall be delivered to the site in the manufacturer's original unopened containers with brand name and type clearly marked. Materials shall be carefully handled and stored in dry, watertight enclosures. Immediately before installation, acoustical units shall be stored for not less than 24 hours at the same temperature and relative humidity as the space where they will be installed in order to assure proper temperature and moisture acclimation.

1.5 ENVIRONMENTAL REQUIREMENTS

A uniform temperature of not less than 15 degrees C (60 degrees F) nor more than 29 degrees C (85 degrees F) and a relative humidity of not more than 70 percent shall be maintained before, during, and after installation of acoustical units.

1.6 SCHEDULING

Interior finish work such as plastering, concrete and terrazzo work shall be complete and dry before installation. Mechanical, electrical, and other work above the ceiling line shall be completed and heating, ventilating, and air conditioning systems shall be installed and operating in order to maintain temperature and humidity requirements.

PART 2 PRODUCTS

2.1 ACOUSTICAL UNITS

Acoustical units shall conform to ASTM E 1264, Class A, and the following requirements:

2.1.1 Units for Exposed-Grid System K

Type: III (mineral fiber with painted finish). Type III acoustical units shall have a minimum recycled material content of 18 percent.

Minimum NRC: 0.55 when tested on mounting No. E-400

Pattern: K.

Nominal size: ~~609.6 by 1 219.2 by 19 mm (24 by 48 by 3/4 inches) scored to give visual appearance of being 609.6 by 609.6~~ 600 by 600 by 19 mm (24 by 24 inches). ~~when installed~~.

Edge detail: Reveal sized to fit flange of exposed grid member.

Finish: Factory-applied standard finish.

Minimum LR coefficient: 0.70.

Minimum CAC: 40.

2.1.2 Units for Adhesive Application

Type: III (mineral fiber with painted finish). Type III acoustical units shall have a minimum recycled material content of 18 percent.

Minimum NRC: 0.55 when tested on mounting No. E-400

Pattern: K.

Nominal size: 300 by 300 mm (12 by 12 inches) for the majority of the ceilings as shown on the drawings (in the Day/Night Dome area only), shall be applied by direct glue down method to the underside of the dome decking per manufacturer's instructions.

Finish: Factory-applied standard finish.

Minimum LR coefficient: 0.70.

Minimum CAC: 40.

2.2 SUSPENSION SYSTEM

Suspension system shall be standard exposed-grid standard width flange as shown on drawings, and shall conform to ASTM C 635 for intermediate-duty systems. Surfaces exposed to view shall be aluminum or steel with a factory-applied white baked-enamel finish. Wall molding shall have a flange of not less than 19 mm (3/4 inch) and shall be provided with inside corner caps. Suspended ceiling framing system shall have the capability to support the finished ceiling, light fixtures, air diffusers, and accessories, as shown. The suspension system shall have a maximum deflection of 1/360 of span length.

2.3 HANGERS

Hangers shall be galvanized steel wire. Hangers and attachment shall support a minimum 136 kg (300 pound) ultimate vertical load without failure of supporting material or attachment.

2.4 ACCESS PANELS

Access panels shall match adjacent acoustical units and shall be designed and equipped with suitable framing and fastenings for removal and replacement without damage. Panel shall be not less than 304.8 by 304.8 mm (12 by 12 inches) or more than 304.8 by 609.6 mm (12 by 24 inches). An identification plate of0.828 mm (0.032 inch) thick aluminum, 19 mm (3/4 inch) in diameter, stamped with the letters "AP" and finished the same as the unit, shall be attached near one corner on the face of each access panel.

2.5 FIRE RESISTIVE CEILINGS

Acoustical ceiling systems indicated as fire resistant shall be rated for fire endurance as indicated when tested in accordance with ASTM E 119. Suspended ceiling shall have been tested with a specimen roof assembly representative of the indicated construction, including mechanical and electrical work within ceiling space openings for light fixtures, and air outlets, and access panels. Ceiling assembly rating shall be as shown on drawings.

2.6 FINISHES

Acoustical units and suspension system members shall have manufacturer's standard textures, patterns and finishes as specified. Ceiling suspension system components shall be treated to inhibit corrosion.

2.7 COLORS AND PATTERNS

Colors and patterns for acoustical units and suspension system components shall be as shown on the drawings.

2.8 CEILING ATTENUATION CLASS AND TEST

Ceiling attenuation class (CAC) range of acoustical units, when required, shall be determined in accordance with ASTM E 1414. Test ceiling shall be continuous at the partition and shall be assembled in the suspension system in the same manner that the ceiling will be installed on the project. System shall be tested with all acoustical units installed.

PART 3 EXECUTION

3.1 INSTALLATION

Acoustical work shall be provided complete with necessary fastenings, clips, and other accessories required for a complete installation. Mechanical fastenings shall not be exposed in the finished work. Hangers shall be laid out for each individual room or space. Hangers shall be placed to support framing around beams, ducts, columns, grilles, and other penetrations through ceilings. Main runners and carrying channels shall be kept clear of abutting walls and partitions. At least two main runners shall be provided for each ceiling span. Wherever required to bypass an object with the hanger wires, a subsuspension system shall be installed, so that all hanger wires will be plumb.

3.1.1 Suspension System

Suspension system shall be installed in accordance with ASTM C 636 and as specified herein. There shall be no hanger wires or other loads suspended from underside of steel decking.

3.1.1.1 Plumb Hangers

Hangers shall be plumb and shall not press against insulation covering ducts and pipes.

3.1.1.2 Splayed Hangers

Where hangers must be splayed (sloped or slanted) around obstructions, the resulting horizontal force shall be offset by bracing, countersplaying, or other acceptable means.

3.1.2 Wall Molding

Wall molding shall be provided where ceilings abut vertical surfaces. Wall molding shall be secured not more than 3 inches from ends of each length and not more than 16 inches on centers between end fastenings

3.1.3 Acoustical Units

Acoustical units shall be installed in accordance with the approved installation instructions of the manufacturer. Edges of acoustical units shall be in close contact with metal supports, with each other, and in true alignment. Acoustical units shall be arranged so that units less than one-half width are minimized. Units in exposed-grid system shall be held in place with manufacturer's standard hold-down clips, if units weigh less than 5 kg per square m (1 psf) or if required for fire resistance rating.

3.2 CEILING ACCESS PANELS

Ceiling access panels shall be located directly under the items which require access.

3.3 CLEANING

Following installation, dirty or discolored surfaces of acoustical units shall be cleaned and left free from defects. Units that are damaged or improperly installed shall be removed and new units provided as directed.

END OF SECTION

SECTION 09620

RESILIENT ATHLETIC FLOORING

PART 1 GENERAL

1.1 REFERENCES

The publications listed below form a part of this specification to the extent referenced. The publications are referred to in the text by basic designation only.

AMERICAN SOCIETY FOR TESTING AND MATERIALS (ASTM)

ASTM C 920	(1995) Elastomeric Joint Sealants
ASTM D 395	(1997) Rubber Property - Compression Set
ASTM D 412	(1997a) Vulcanized Rubber and Thermoplastic Rubbers and Thermoplastic Elastomers - Tension
ASTM D 624	(1998) Tear Strength of Conventional Vulcanized Rubber and Thermoplastic Elastomers
ASTM D 1054	(1991) Rubber Property - Resilience Using a Rebound Pendulum
ASTM D 1242	(1995) Resistance of Plastic Materials to Abrasion
ASTM D 1894	(1995) Static and Kinetic Coefficients of Friction of Plastic Film and Sheeting
ASTM D 2240	(1997) Rubber Property - Durometer Hardness
ASTM D 2632	(1996) Rubber Property-Resilience by Vertical Rebound
ASTM G 21	(1990) Determining Resistance of Synthetic Polymeric Materials to Fungi

1.2 SUBMITTALS

Government approval is required for submittals with a "GA" designation; submittals having an "FIO" designation are for information only. The following shall be submitted in accordance with Section 01330 SUBMITTAL PROCEDURES:

SD-01 Data

Resilient Athletic Flooring and Accessories; FIO.

Manufacturer's descriptive data and catalog cuts indicating materials of construction and physical characteristics. Installation, cleaning and maintenance instructions shall be included.

SD-04 Drawings

Resilient Athletic Flooring and Accessories; FIO.

Drawings showing game lines, location of anchor plate assemblies, floor outlets, and under-floor conduit or raceways.

SD-13 Certificates

Resilient Athletic Flooring and Accessories; FIO.

Manufacturer's certificates stating that the resilient athletic flooring materials conform to the specified requirements. Labels or markings affixed to manufacturer's products attesting that products meet requirements specified herein will be accepted in lieu of certificates.

SD-14 Samples

Resilient Athletic Flooring and Accessories; FIO.

Three samples minimum 225 x 275 mm of each color of flooring material required.

1.3 QUALIFICATIONS

Adhesive applied and poured-in-place flooring shall be installed by an experienced floor applicator approved by the manufacturer.

1.4 DELIVERY, STORAGE, AND HANDLING

Materials shall be delivered in manufacturer's original unopened containers with labels intact. Materials shall not be delivered to the installation area or installed before all work that may damage the materials or the finished floor, such as overhead work, is completed. Materials shall be stored in a clean, dry area. Materials in storage shall be maintained at temperatures recommended by the manufacturer. Protection boards shall be stored flat and off the ground.

1.5 WARRANTY

Manufacturer's standard performance guarantees or warranties that extend beyond a one year period shall be provided.

1.6 EXTRA MATERIALS

1.6.1 Floor Tiles

Spare tiles of each color shall be furnished at the rate of 5 tiles for each 1000 tiles installed. Tiles shall be from the same lot as those installed.

1.6.2 Carpeting

Extra material from same dye lot consisting of full width continuous broadloom shall be provided for maintenance. A minimum of 1 percent of total square meters of each carpet type, pattern, and color shall be provided.

PART 2 PRODUCTS

2.1 RUBBER COMPOSITION TILE TYPE A

Rubber tiles shall be interlocked 600 x 600 mm square, of solid first quality rubber, uniformly resilient material designed to be applied stayed adhesive. Tiles shall be approximately 13 mm thick, shall be smooth texture, and shall be reversible. Flooring shall be able to withstand 75 percent compression for 22 hours at 70 degrees C without residual deformation when tested in accordance with ASTM D 395. Flooring shall have a durometer hardness Shore-A of 50-60 when tested in accordance with ASTM D 2240.

2.2 PRIMER

Concrete primer shall be as recommended by flooring manufacturer and must correspond to the specified flooring product and to the substrate.

2.3 WALL BASE

Base shall be rubber, Type coved style. Base shall be 100 mm high and minimum 2 mm thick.

PART 3 EXECUTION

3.1 PREPARATION

Concrete surfaces shall be completely cured and dry. No curing agents, sealers, or hardeners shall be used to aid in the curing of the concrete slab. Surfaces shall be free of paint spots, and other foreign materials. Surfaces shall be ground down or leveled with an approved leveling compound to a tolerance of plus or minus 3 mm within a 3 meters radius. Cracks, construction joints, or damaged portions of floor shall be filled with crack filler for concrete surfaces. Expansion joints shall be filled and sealed in accordance with the approved installation instructions of the manufacturer. All sealants shall be in accordance with ASTM C 920. Expansion joints shall not be filled with a material that will make them inoperable.

3.2 MOISTURE TEST

The suitability of the concrete subfloor for receiving the resilient flooring with regard to moisture content shall be determined by a moisture test as recommended by the flooring manufacturer.

3.3 INSTALLATION

3.3.1 General Requirements

Installation shall be in accordance with the approved installation instructions. Tile or sheet flooring shall be rolled with a medium-sized roller in both directions to release entrapped air.

3.3.2 Molded Rubber Base

Base shall be installed in accordance with the approved installation instructions of the manufacturer of the base.

3.3.3 Rubber Composition Tile Flooring

3.3.6.1 Application Without Adhesive

Tiles shall be joined together using interlocking ears or other mechanical locking techniques. The ears shall interlock into the adjoining tile 40 mm and shall provide at least five interlocks for each 600 mm edge. Where required, a beveled transfer border shall be supplied to interlock with the flooring tiles. The borders shall be 150 mm wide and 600 mm long and the same thickness as the matching tiles.

3.4 PROTECTION

The installed flooring shall be protected from soiling and damage with heavy reinforced, nonstaining kraft paper, plywood, or hardboard sheets as required. Edges of kraft paper protection shall be lapped and secured to provide a continuous cover. Protective covering shall be removed when directed by the Contracting Officer.

END OF SECTION

SECTION 09640

WOOD ATHLETIC FLOORING

PART 1 GENERAL

1.1 REFERENCES

The publications listed below form a part of this specification to the extent referenced. The publications are referred to in the text by basic designation only.

MAPLE FLOORING MANUFACTURERS ASSOCIATION (MFMA)

MFMA-01	(1997) Spec Data Sheet; Wood Flooring, Maple

NATIONAL OAK FLOORING MANUFACTURERS ASSOCIATION (NOFMA)

NOFMA-01	(1997) Flooring Grading Rules, Oak, Beech, Birch, Hard Maple, Pecan

1.2 SYSTEM DESCRIPTION

This specification is written to allow the Contractor to build wood strip floorings for gymnasiums, handball and squash courts, and other special purpose applications but does not preclude the installation of competitive, manufacturer standard, integrated systems.

1.3 SUBMITTALS

Government approval is required for submittals with a "GA" designation; submittals having an "FIO" designation are for information only. The following shall be submitted in accordance with Section 01330 SUBMITTAL PROCEDURES:

SD-04 Drawings

Squash and Handball Court Walls; GA.

Expansion joint details.

SD-06 Instructions

Installation; FIO.

Manufacturer's descriptive data and installation instructions.

SD-14 Samples

Strip Flooring; FIO.

Two samples of each type of strip flooring.

1.4 DELIVERY AND STORAGE

Materials shall be delivered to the site in original unopened packages, bundles or containers and with all labels intact. Flooring shall be stored in fully covered, well ventilated areas and protected from extreme changes in temperature and humidity. Flooring shall be maintained at an average moisture content of 6 to 9 percent. Temperature and humidity in the storage area shall closely approximate the temperature and humidity of the rooms in which the flooring is to be installed.

1.5 ENVIRONMENTAL CONDITIONS

Rooms where wood flooring is to be installed shall have permanent heating and air conditioning installed and working or adequate arrangements for ventilation and temperature controls. The temperature shall be maintained at 14 to 27 degrees C and the humidity shall be maintained as recommended by the manufacturer starting not less than 3 days prior to beginning the installation of flooring and continuing throughout the remainder of the contract period.

1.6 SCHEDULING

Strip flooring work shall be scheduled after any other work which would raise the moisture content of the flooring or damage the finished surface of the flooring.

PART 2 PRODUCTS

2.1 STRIP FLOORING

Strip flooring shall be 25 mm thick by 55 mm face width, kiln dried, continuous tongue and groove and of standard lengths. Hard maple shall be second and better in accordance with MFMA-01. Strip flooring shall be marked with the trademark of the grading agency.

2.2 NAILS

Nails shall be in accordance with strip flooring manufacturer's recommendations.

2.3 RESILIENT PADS

Resilient pads shall be pneumatic rubber, PVC, or polyurethane resilient mounts to fit the selected floor system.

2.4 WALL BASE

Wall base shall be wood molding or vented cove with premolded outside corners and mitered inside corners.

2.5 MOISTURE BARRIER

Moisture barrier shall be 0.15 mm minimum thickness polyethylene.

2.6 CLIPS, ANCHOR CHANNELS AND INSULATION

Galvanized steel clips for steel channel anchorage systems shall be in accordance with steel channel anchorage system manufacturer's recommendations. Clips shall be designed to provide holding at least equal to the nailing specified and shall function without splitting the assembled boards or otherwise reducing the performance of the floor. Anchor channels shall be as recommended by the flooring manufacturer. Anchor channels shall be galvanized, complete with all pads, anchors and other components required for channel installation. Underfloor insulation shall be asphalt impregnated fiberboard or closed-cell polyethylene foam.

PART 3 EXECUTION

3.1 SURFACE CONDITIONS

Concrete slab shall be level, steel troweled to a tolerance of 3 mm plus or minus in a 3 meters radius. Slab surface shall be clean, dry, and approved prior to start of installation. The slab shall be depressed as required by the floor specified.

3.2 INSTALLATION

Flooring shall be installed in accordance with the approved installation instructions of the manufacturer. Wood nailers are specified in Section 06100 ROUGH CARPENTRY. Unless otherwise approved, flooring shall be laid parallel to the length of the area to be floored. Strips shall be laid to allow for intermediate expansion in accordance with humidity conditions expected during the life of the of the flooring. End joints shall be so alternated that there will be at least two boards between end joints in the same plane and at least 150 mm between end joints in adjacent boards. Space for expansion shall be left along perimeter walls and around fixed projections through the floor surface. Unless otherwise shown or permitted by the approved installation instructions, expansion space shall be 5 mm per meter of distance between opposite walls, with one half the space provided at each wall and with a minimum space of 25 mm at each wall.

3.2.1 Gymnasium Floors

3.2.1.1 Wood Sleepers

For wood sleeper supported floors, the slab shall be vapor-sealed with a two-ply membrane and hot-poured, steep-slope asphalt to a minimum depth of 6 mm above bottom of sleepers. Anchored, treated wood sleepers shall be spaced at 400 mm on center with wood or plywood subfloor or, if required by design considerations, wood sleepers at 300 mm on centers without subfloor and with 25 mm thick flooring. Space between rows of wood sleepers shall be left vacant. Expansion joints shall be 50 mm maximum.

3.2.1.2 Steel Channels

Galvanized steel channel system shall be placed on manufacturer's standard grooved foam or grooved resilient insulation board. Expansion joints shall be in accordance with manufacturer's recommendations.

3.3 SANDING

Flooring shall be sanded to a smooth, even, uniform finish without burns. A minimum of three sanding cuts, each with a finer sandpaper, shall be made. A heavy drum-type sander shall be used for floors, except a disc-type sander will be permitted for the final cut on strip flooring. Either the first pass or the second pass of the drum-type sander shall be at an angle of 45 degrees to the grain; other passes of the drum-type sander shall be in the direction of the grain of strip flooring. Edges not reached by the sander shall be finished with an edger or by hand methods. The final sanding shall be performed at a time and in a manner that will permit application of the first seal coat as specified in Section 09900PAINTING, GENERAL to be completed within 8 hours after completion of sanding. The flooring shall be left clean and ready to receive the finishing materials.

3.4 FINISH

3.4.1 Preparation

The entire floor surface must be completely free of sanding dust prior to applying each coat of seal and finish. Between coats the surface shall be completely buffed.

3.4.2 Coats of Finish

A minimum of two coats of finish and two coats of seal shall be applied per manufacturer's instructions or a minimum as specified in Section 09900.

3.4.3 Game Lines

Game line application shall be made after the two coats of finish and before the two coats of seal. The second finish and coat must be completely dry before application. Game line paint must be compatible with floor finish system. Such compatibility shall be guaranteed in writing by the game line paint manufacturer.

From the time of installation until final acceptance, flooring shall be protected from damage.

3.5 PROTECTION

From the time of installation until final acceptance, flooring shall be protected from damage.

END OF SECTION

THIS SECTION ADDED PER AMENDMENT R0002

SECTION 09650

RESILIENT FLOORING

1 PART 1 GENERAL

1.1 REFERENCES

The publications listed below form a part of this specification to the extent referenced. The publications are referred to in the text by basic designation only.

AMERICAN SOCIETY FOR TESTING AND MATERIALS (ASTM)

ASTM D 4078	(1992; R 1996) Water Emulsion Floor Polish
ASTM E 648	(1997) Critical Radiant Flux of Floor-Covering Systems Using a Radiant Heat Energy Source
ASTM E 662	(1994a) Specific Optical Density of Smoke Generated by Solid Materials
ASTM F 1066	(1995a) Vinyl Composition Floor Tile

1.2 FIRE RESISTANCE REQUIREMENTS

Flooring in corridors and exits shall have a minimum average critical radiant flux of 0.22 watts per square centimeter when tested in accordance with ASTM E 648. The smoke density rating shall be less than 450 when tested in accordance with ASTM E 662.

1.3 SUBMITTALS

Government approval is required for submittals with a "GA" designation; submittals having an "FIO" designation are for information only. The following shall be submitted in accordance with Section 01300 SUBMITTALS:

SD-01 Data

Resilient Flooring and Accessories; GA.

Manufacturer's descriptive data and installation instructions including cleaning and maintenance instructions.

SD-09 Reports

Resilient Flooring and Accessories; FIO.

Copies of test reports showing that representative product samples of the flooring proposed for use have been tested by an independent testing laboratory within the past three years or when formulation change occurred and conforms to the requirements specified.

SD-14 Samples

Resilient Flooring and Accessories; GA.

Three samples of each indicated color and type of flooring and base. Sample size shall be minimum 60 by 100 mm.

1.4 DELIVERY AND STORAGE

Materials shall be delivered to the building site in original unopened containers bearing the manufacturer's name, project identification, and handling instructions. Materials shall be stored in a clean dry area with temperature maintained above 21 degrees C for 2 days prior to installation, and shall be stacked according to manufacturer's recommendations. Materials shall be protected from the direct flow of heat from hot-air registers, radiators and other heating fixtures and appliances.

1.5 ENVIRONMENTAL REQUIREMENTS

Areas to receive resilient flooring shall be maintained at a temperature above 21 degrees C and below 38 degrees C for 2 days before application, during application and 2 days after application. A minimum temperature of 13 degrees C shall be maintained thereafter.

1.6 SCHEDULING

Resilient flooring application shall be scheduled after the completion of other work which would damage the finished surface of the flooring.

1.7 WARRANTY

Manufacturer's standard performance guarantees or warranties that extend beyond a one year period shall be provided.

1.8 EXTRA MATERIALS

Extra flooring material of each color and pattern shall be furnished at the rate of 5 tiles for each 1000 tiles installed. Extra materials shall be from the same lot as those installed. Extra base material composed of 6 m of each color shall be furnished.

2 PART 2 PRODUCTS

2.1 VINYL-COMPOSITION TILE TYPE

Vinyl-composition tile shall conform to ASTM F 1066, Class 2,(through pattern tile), Composition 1, asbestos-free, and shall be 300 mm square and 3.2 mm thick. Tile shall have the color and pattern uniformly distributed throughout the thickness of the tile. Flooring in any one continuous area shall be from the same lot and shall have the same shade and pattern.

2.2 RESILIENT BASE

Base shall be manufacturers standard rubber, coved style. Base shall be 100 mm high and a minimum 3 mm thick. Preformed outside or job formed corners shall be furnished.

2.3 FEATURE STRIP

Feature strips shall be vinyl or rubber, 25 mm wide, and of thickness to match the flooring. Color shall be compatible with tile.

2.4 TRANSITION STRIP

A vinyl or rubber transition strip tapered to meet abutting material shall be provided.

2.5 ADHESIVE

Adhesive for flooring and wall base shall be as recommended by the flooring manufacturer.

2.6 POLISH

Polish shall conform to ASTM D 4078.

2.7 CAULKING AND SEALANTS

Caulking and sealants shall be in accordance with Section 07900 JOINT SEALING.

2.8 MANUFACTURER'S COLOR AND TEXTURE

Color and texture shall be in accordance with the Material and Color Schedule shown on the drawings.

3 PART 3 EXECUTION

3.1 EXAMINATION/VERIFICATION OF CONDITIONS

The Contractor shall examine and verify that site conditions are in agreement with the design package and shall report all conditions that will prevent a proper installation. The Contractor shall not take any corrective action without written permission from the Government.

3.2 SURFACE PREPARATION

Flooring shall be in a smooth, true, level plane, except where indicated as sloped. Before any work under this section is begun, all defects such as rough or scaling concrete, low spots, high spots, and uneven surfaces shall have been corrected, and all damaged portions of concrete slabs shall have been repaired as recommended by the flooring manufacturer. Concrete curing compounds, other than the type that does not adversely affect adhesion, shall be entirely removed from the slabs. Paint, varnish, oils, release agents, sealers, waxes, and adhesives shall be removed, as recommended by the flooring manufacturer.

3.3 MOISTURE TEST

The suitability of the concrete subfloor for receiving the resilient flooring with regard to moisture content shall be determined by a moisture test as recommended by the flooring manufacturer.

3.4 INSTALLATION OF VINYL-COMPOSITION TILE

Tile flooring shall be installed with adhesive in accordance with the manufacturer's installation instructions. Tile lines and joints shall be kept square, symmetrical, tight, and even. Edge width shall vary as necessary to maintain full-size tiles in the field, but no edge tile shall be less than one-half the field tile size, except where irregular shaped rooms make it impossible. Flooring shall be cut to, and fitted around, all permanent fixtures, built-in furniture and cabinets, pipes, and outlets. Edge tile shall be cut, fitted, and scribed to walls and partitions after field flooring has been applied.

3.5 INSTALLATION OF FEATURE STRIPS

Edge strips shall be secured with adhesive as recommended by the manufacturer. Edge strips shall be provided at locations where flooring termination is higher than the adjacent finished flooring, except at doorways where thresholds are provided.

3.6 INSTALLATION OF RESILIENT BASE

Wall base shall be installed with adhesive in accordance with the manufacturer's written instructions. Base joints shall be tight and base shall be even with adjacent resilient flooring. Voids along the top edge of base at masonry walls shall be filled with caulk.

3.7 CLEANING

Immediately upon completion of installation of tile in a room or an area, flooring and adjacent surfaces shall be cleaned to remove all surplus adhesive. After installation, flooring shall be washed with a cleaning solution, rinsed thoroughly with clear cold water, and, except for raised pattern rubber flooring, rubber tile and sheet rubber flooring, rubber stair treads, and static control vinyl tile, given two coats of polish in accordance with manufacturers written instructions. After each polish coat, floors shall be buffed to an even luster with an electric polishing machine. Raised pattern rubber flooring, rubber tile and sheet rubber flooring, rubber stair treads, and static control vinyl tile shall be cleaned and maintained as recommended by the manufacturer.

3.8 PROTECTION

From the time of laying until acceptance, flooring shall be protected from damage as recommended by the flooring manufacturer. Flooring which becomes damaged, loose, broken, or curled shall be removed and replaced.

END OF SECTION

This page intentionally blank

SECTION 09680

CARPET

PART 1 GENERAL

1.1 REFERENCES

The publications listed below form a part of this specification to the extent referenced. The publications are referred to in the text by basic designation only.

AMERICAN ASSOCIATION OF TEXTILE CHEMISTS AND COLORISTS (AATCC)

AATCC TM 16	(1993) Test Method: Colorfastness to Light
AATCC TM 134	(1991) Test Method: Electrostatic Propensity of Carpets
AATCC TM 165	(1993) Test Method: Colorfastness to Crocking: Carpets – AATCC Crockmeter Method
AATCC TM 174	(1993) Test Method: Antimicrobial Activity Assessment of Carpet

AMERICAN SOCIETY FOR TESTING AND MATERIALS (ASTM)

ASTM D 418	(1993) Pile Yarn Floor Covering Construction
ASTM D 1335	(1967; R 1972) Tuft Bind of Pile Floor Coverings
ASTM D 1423	(1992) Twist in Yarns by the Direct-Counting Method
ASTM D 3278	(1996) Test Methods for Flash Point of Liquids by Small Scale Closed-Cup Apparatus
ASTM D 3676	(1996a) Rubber Cellular Cushion Used for Carpet or Rug Underlay
ASTM D 3936	(1980) Delamination Strength of Secondary Backing of Pile Floor Coverings
ASTM E 648	(1997) Critical Radiant Flux of Floor-Covering Systems Using a Radiant Heat Energy Source

CARPET AND RUG INSTITUTE (CRI)

CRI 104	(1996) Commercial Carpet Installation Standard

CODE OF FEDERAL REGULATIONS (CFR)

16 CFR 1630	Standard for the Surface Flammability of Carpet and Rugs (FF 1-70)

1.2 SUBMITTALS

Government approval is required for submittals with a "GA" designation; submittals having an "FIO" designation are for information only. The following shall be submitted in accordance with Section 01330 SUBMITTAL PROCEDURES:

SD-01 Data

Carpet and Accessories; FIO.

Manufacturer's catalog data and printed documentation stating physical characteristics, durability, resistance to fading, and flame resistance characteristics for each type of carpet material and installation accessory.

SD-04 Drawings

Installation; FIO.

Three copies of drawings indicating areas receiving carpet, carpet types, textures and patterns, direction of pile, location of seams, and locations of edge molding.

SD-06 Instructions

Carpet and Accessories; FIO.

Three copies of the manufacturer's printed installation instructions for the carpet, including preparation of substrate, seaming techniques, and recommended adhesives and tapes.

SD-09 Reports

Moisture and Alkalinity Tests; FIO.

Three copies of test reports of moisture and alkalinity content of concrete slab stating date of test, person conducting the test, and the area tested.

SD-13 Certificates

Carpet and Accessories; FIO.

Certificates of compliance from a laboratory accredited by the National Laboratory Accreditation Program of the National Institute of Standards and Technology attesting that each type of carpet and carpet with cushion material conforms to the standards specified.

SD-14 Samples

Carpet and Accessories; FIO.

a. Carpet: Two "Production Quality" samples 685.8 x 457.2 mm (27 x 18 inches) of each carpet proposed for use, showing quality, pattern, and color specified.

b. Vinyl or Aluminum Moldings: Two pieces of each type at least 304.8 mm (12 inches) long.

c. Special Treatment Materials: Two samples showing system and installation method.

SD-19 Operation and Maintenance Manuals

Carpet and Accessories; FIO.

Three copies of carpet manufacturer's maintenance instructions describing recommended type of cleaning equipment and material, spotting and cleaning methods, and cleaning cycles.

1.3 REGULATORY REQUIREMENTS

Carpet and adhesives shall bear the Carpet and Rug Institute (CRI) Indoor Air Quality (IAQ) label. Carpet type bearing the label will indicate that the carpet has been tested and meets the criteria of the CRI IAQ Carpet Testing Program, and minimizes the impact on indoor air quality.

1.4 DELIVERY AND STORAGE

Materials shall be delivered to the site in the manufacturer's original wrappings and packages clearly labeled with the manufacturer's name, brand name, size, dye lot number, and related information. Materials shall be stored in a clean, dry, well ventilated area, protected from damage and soiling, and shall be maintained at a temperature above 15 degrees C (60 degrees F) for 2 days prior to installation.

1.5 ENVIRONMENTAL REQUIREMENTS

Areas in which carpeting is to be installed shall be maintained at a temperature above 15 degrees C (60 degrees F) for 2 days before installation, during installation, and for 2 days after installation. A minimum temperature of 13 degrees C (55 degrees F) shall be maintained thereafter for the duration of the contract. Traffic or movement of furniture or equipment in carpeted area shall not be permitted for 24 hours after installation. Other work which would damage the carpet shall be completed prior to installation of carpet.

1.6 WARRANTY

Manufacturer's standard performance guarantees or warranties that extend beyond a one-year period shall be provided.

1.7 EXTRA MATERIAL

Extra material from same dye lot consisting of full width continuous broadloom and uncut carpet tiles shall be provided for future maintenance. A minimum of 5 percent of total square yards of each carpet type, pattern, and color shall be provided.

PART 2 PRODUCTS

2.1 CARPET TYPE A

Carpet shall be first quality; free of visual blemishes, streaks, poorly dyed areas, fuzzing of pile yarn, spots or stains, and other physical and manufacturing defects. Carpet materials and treatments shall be reasonably nonallergenic and free of other recognized health hazards. All grade carpets shall have a static control construction which gives adequate durability and performance.

2.1.1 Physical Characteristics

Carpet shall comply with the following:

a. Carpet Construction: Tufted.

b. Type: Broadloom 3 657.6 mm (12 feet) minimum usable carpet width

c. Pile Type: Level tip shear.

d. Pile Fiber: Commercial branded nylon continuous filament.

e. Pile or Wire Height: Minimum High = 23.8 mm (5/16 inch), Low = 3.175 mm (1/8 inch) in accordance with ASTM D 418.

f. Yarn Ply: Minimum 2 in accordance with ASTM D 1423.

g. Gauge or Pitch: Minimum 2.38 mm (3/32 inch) in accordance with ASTM D 418.

h. Stitches or Rows/Wires: Minimum 292.1 per square meter

i. Finished Pile Yarn Weight: Minimum 1.021 kg per square meter. This does not include weight of backings. Weight shall be determined in accordance with ASTM D 418.

j. Pile Density: Minimum 6171.

k. Dye Method: Yarn (or Skein) dyed.

l. Backing Materials: Primary backing materials shall be polypropylene. Secondary backing to suit project requirements shall be those customarily used and accepted by the trade for each type of carpet, except when a special unitary back designed for gluedown is provided.

2.1.2 Performance Requirements

a. Static Control: Static control shall be provided to permanently control static buildup to less than 3.5 kV when tested at 20 percent relative humidity and 21 degrees C (70 degrees F) in accordance with AATCC TM 134.

b. Flammability and Critical Radiant Flux Requirements: Carpet shall comply with 16 CFR 1630. Carpet in corridors and exits shall have a minimum average critical radiant flux of 0.45 watts per square centimeter when tested in accordance with ASTM E 648.

c. Tuft Bind: Tuft bind force required to pull a tuft or loop free from carpet backing shall be a minimum 9 pound average force for loop pile when tested in accordance with ASTM D 1335.

d. Additional Performance Characteristics:

(1) Antimicrobial: Nontoxic antimicrobial treatment in accordance with AATCC TM 174, Part I (qualitative), guaranteed by the carpet manufacturer to last the life of the carpet.

(2) Attached Cushion: Attached cushion shall be latex foam rubber with minimum weight of 30 oz/sq. yard, minimum thickness of 0.100 inch, minimum density of 272.3 kg/cubic meter (17 lb/cubic foot), minimum compression resistance of 11.894 kPa (5 psi), and maximum compression set of 15 percent in accordance with ASTM D 3676. Maximum ash content shall not exceed 50 percent when tested in accordance with ASTM D 297. Cushion shall pass accelerated aging test in accordance with ASTM D 3676.

e. Colorfastness to Crocking: Dry and wet crocking shall comply with AATCC TM 165 and shall have a minimum rating of step 4 on the AATCC Color Transference Chart for all colors.

f. Colorfastness to Light: Colorfastness to light shall comply with AATCC TM 16 and shall have a minimum 4 grey scale rating after 40 hours.

g. Delamination Strength: Delamination strength for tufted carpet with a secondary back shall be minimum of 2.5 lb./inch in accordance with ASTM D 3936.

2.2 ADHESIVES AND CONCRETE PRIMER

Adhesives and concrete primers for installation of carpet shall be waterproof, nonflammable, meet local air-quality standards, and shall be as recommended by the carpet manufacturer. Seam adhesive shall be waterproof, nonflammable, and nonstaining as recommended by the carpet manufacturer. Release adhesive for modular tile carpet shall be as recommended by the carpet manufacturer. Adhesives flashpoint shall be minimum 60 degrees C (140 degrees F) in accordance with ASTM D 3278.

2.3 MOLDING

Aluminum molding shall be a hammered surface, pinless clamp-down type, designed for the type of carpet being installed. Finish shall be natural color anodized. Floor flange shall be a minimum 38.1 mm (1-1/2 inches) wide and face shall be a minimum 15.875 mm (5/8 inch) wide.

2.4 TAPE

Tape for seams shall be as recommended by the carpet manufacturer for the type of seam used in installation.

2.5 COLOR, TEXTURE, AND PATTERN

Color, texture, and pattern shall be as shown on drawings.

PART 3 EXECUTION

3.1 SURFACE PREPARATION

Carpet shall not be installed on surfaces that are unsuitable and will prevent a proper installation. Holes, cracks, depressions, or rough areas shall be repaired using material recommended by the carpet or adhesive manufacturer. Floor shall be free of any foreign materials and swept broom clean. Before beginning work, subfloor shall be tested with glue and carpet to determine "open time" and bond.

3.2 MOISTURE AND ALKALINITY TEST

Concrete slab shall be tested for moisture content and excessive alkalinity in accordance with CRI 104. The moisture content shall not exceed a hygrometer reading of 65 percent.

3.3 PREPARATION OF CONCRETE SUBFLOOR

Installation of the carpeting shall not commence until concrete substrate is at least 90 days old. The concrete surfaces shall be prepared in accordance with instructions of the carpet manufacturer. Type of concrete sealer, when required, shall be compatible with the carpet.

3.4 INSTALLATION

Installation shall be in accordance with the manufacturer's instructions and CRI 104. Edges of carpet meeting hard surface flooring shall be protected with molding. Installation shall be in accordance with the molding manufacturer's instructions.

3.4.1 Broadloom Installation

Broadloom carpet shall be installed direct glue down and shall be smooth, uniform, and secure, with a minimum of seams. Seams shall be uniform, unnoticeable, and treated with a seam adhesive. Side seams shall be run toward the light where practical and where such layout does not increase the number of seams. Breadths shall be installed parallel, with carpet pile in the same direction. Patterns shall be accurately matched. Cutouts, as at door jambs, columns and ducts shall be neatly cut and fitted securely. Seams at doorways shall be located parallel to and centered directly under doors. Seams shall not be made perpendicular to doors or at pivot points. Seams at changes in directions of corridors shall follow the wall line parallel to the carpet direction. Corridors with widths less than 6 feet shall have the carpet laid lengthwise down the corridors.

3.5 CLEANING AND PROTECTION

3.5.1 Cleaning

After installation of the carpet, debris, scraps, and other foreign matter shall be removed. Soiled spots and adhesive shall be removed from the face of the carpet with appropriate spot remover. Protruding face yarn shall be cut off and removed. Carpet shall be vacuumed clean.

3.5.2 Protection

The installed carpet shall be protected from soiling and damage with heavy, reinforced, nonstaining kraft paper, plywood, or hardboard sheets. Edges of kraft paper protection shall be lapped and secured to provide a continuous cover. Traffic shall be restricted for at least 45 hours. Protective covering shall be removed when directed by the Contracting Officer.

3.6 REMNANTS

Remnants remaining from the installation, consisting of scrap pieces more than 609.6 mm (2 feet) in dimension with more than 0.5574 square meters (6 square feet) total, shall be provided. Non-retained scraps shall be removed from site.

END OF SECTION

This page intentionally blank

SECTION 09720

WALLCOVERINGS

PART 1 GENERAL

1.1 REFERENCES

The publications listed below form a part of this specification to the extent referenced. The publications are referred to in the text by basic designation only.

AMERICAN SOCIETY FOR TESTING AND MATERIALS (ASTM)

ASTM C 423	(1990a) Sound Absorption and Sound Absorption Coefficients by the Reverberation Room Method
ASTM D-1308	(1998) Effect of Household Chemicals on Clear and Pigmented Organic Finishes
ASTM E 84	(1998c) Surface Burning Characteristics of Building Materials
ASTM F 476	(1991) Security of Swinging Door Assemblies
ASTM F 793	(1993) Standard Classification of Wallcovering by Durability Characteristics

INTERNATIONAL CONFERENCE OF BUILDING OFFICIALS (ICBO)

UBC	Uniform Building Code (Latest Edition)

1.2 SUBMITTALS

Government approval is required for submittals with a "GA" designation; submittals having an "FIO" designation are for information only. The following shall be submitted in accordance with Section 01330 SUBMITTAL PROCEDURES:

SD-01 Data

Wallcovering and Accessories; FIO.

High Impact Panels and Accessories; FIO.

Acoustical Panels and Accessories; FIO.

Manufacturer's descriptive data, documentation stating physical characteristics, flame resistance, mildew and germicidal characteristics.

SD-06 Instructions

Installation; FIO.

Preprinted installation instructions for wallcovering and accessories, high impact panels, acoustical panels, and accessories

Maintenance; FIO.

Preprinted cleaning and maintenance instructions for wallcovering and accessories, high impact panels, acoustical panels, and accessories.

SD-13 Certificates

Wallcovering; GA.

High Impact Panels; GA.

Acoustical Panels; GA.

Manufacturer's statement attesting that the product furnished meets or exceeds specification requirements. The statement must; be dated after the award of the contract, state Contractor's name and address, name the project and location, and list the requirements being certified.

SD-14 Samples

Wallcovering and Accessories; FIO.

High Impact Panels and Accessories; FIO.

Acoustical Panels and Accessories; FIO.

Three samples of each indicated type, pattern, and color of wallcovering. Samples of wall covering shall be minimum 125 x 175 mm and of sufficient size to show pattern repeat. Three samples of each indicated type corner guard and wainscot cap.

1.3 DELIVERY AND STORAGE

Materials shall be delivered to the site in manufacturers original unopened containers labeled with manufacturers name, pattern, texture, size and related information. Materials shall be stored in accordance with the manufacturer's instructions in a clean dry ventilated area with temperature maintained above 16 degrees C for 2 days prior to installation.

1.4 ENVIRONMENTAL REQUIREMENTS

Areas to receive wallcovering shall be maintained at a temperature above 16 degrees C for 7 days before, during, and 7 days after application.

1.5 WARRANTY

Manufacturer's standard performance guarantees or warranties that extend beyond a one-year period shall be provided.

1.6 EXTRA MATERIALS

Extra material from the same dye lot consisting of 0.5 m of full-width wallcovering for each 100 linear meters of wallcovering installed shall be provided for maintenance.

PART 2 PRODUCTS

2.1 WALLCOVERINGS

Wallcoverings shall be material designed specifically for the specified use. The wallcovering shall contain a non-mercury based mildewcide. The wallcovering shall be type made without the use of cadmium based stabilizers. Wallcovering shall have a Class A flame spread rating of 0-25 and smoke development rating of 0-50 when tested in accordance with ASTM E 84.

2.1.1 Vinyl Wallcovering Type A

Vinyl wallcovering shall be a vinyl coated woven or nonwoven fabric with germicidal additives and shall conform to ASTM F 793, Category Type II, 0.445 to 0.815 kg total weight per square meter and width of 1370 mm.

2.2 CORNER GUARDS

Corner guards shall be 2 mm thick and shall cover 19 mm each side of corner at right angles. Corner guards shall be clear polycarbonate from the same lot and color.

2.3 WAINSCOT CAP

Wainscot cap shall be satin-finished extruded aluminum about 50 mm high, feathered at bottom edge, with an approximate 5 mm exposed face on top edge, and grooved to receive the covering.

2.4 PRIMER AND ADHESIVE

Primer and adhesive shall be of a type recommended by the wallcovering manufacturer and shall contain a non-mercury based mildewcide. Adhesive shall be strippable type. Adhesive to install cap shall be of a type recommended by the manufacturer of the wainscot cap.

2.5 COLOR, TEXTURE, AND PATTERN

Color, texture, and pattern shall be as indicated on the drawings.

2.6 WALL PANELS

2.6.1 High Impact Panels

High impact panels shall be beveled and square edge. Panels shall be manufactured of .56 mm (.022 inch) or 1.02 mm (.04 inch) thick vinyl/acrylic. Color shall be teal. The vinyl/acrylic covering shall be factory bonded to the face side of a 9.53 mm (3/8 inch) thick high-impact fiberboard core, extending over the beveled edges on four sides. The backside of the panel to be laminated with a moisture resistant vapor barrier. Panel size shall be as indicated on the drawings.

2.6.1.1 Accessories

All trim members to be of vinyl/acrylic alloy, supplied in color to coordinate with panel color. Adhesive and mounting hardware shall be supplied by the manufacturer.

2.6.2 Acoustical Panel

Panels shall be manufactured of 9.53 mm (3/8 inch) thick high density fiberglass core, complete with beveled edges on four sides to create "V" joint reveal. The entire face and edges of panel shall include a factory laminated fabric or vinyl coated fabrics with perforation. Panel size shall be as shown on the drawings. Color shall be dark blue.

2.6.2.1 Sound Performance

Sound absorption of acoustical panels shall be in accordance with ASTM C 423.

2.6.2.2 Accessories

Trim members as required shall be furnished in solid color to blend with vinyl clad panel color. All materials shall be installed with factory supplied adhesive and fasteners.

2.6.3 Fire Performance Characteristics

Wall panels shall have a Class I fire rating characteristics when tested in accordance with ASTM-E84: Flame spread 20 or less, smoke development: 400 or less.

2.6.4 Impact resistance shall be per ASTM F476-76, paragraph 18, Impact Test Procedure.

2.6.5 Chemical and Stain Resistance

Provide wall panels with chemical and stain resistance in accordance with ASTM D 1308.

2.6.6 Single Source Responsibility

Provide all components of the wall panels manufactured by the same company to ensure compatibility of color, texture and physical properties.

PART 3 EXECUTION

3.1 EXAMINATION

Contractor shall inspect all areas and conditions under which wallcoverings are to be installed. Contractor shall notify in writing of any conditions detrimental to the proper and timely completion of the installation. Work will proceed only when conditions have been corrected and accepted by the installer.

3.2 SURFACE PREPARATION

Wallcovering shall not be applied to surfaces that are rough, that contain stains that will bleed through the wallcovering, or that are otherwise unsuitable for proper installation. Cracks and holes shall be filled and rough spots shall be sanded smooth. Surfaces to receive wallcovering shall be thoroughly dry. Plaster surfaces shall age at least 30 days prior to installation of vinyl wallcoverings. Interior surfaces of exterior masonry walls shall be sealed to prevent moisture penetration, then primed with a wallcovering primer in accordance with the manufacturer's instructions. Moisture content of plaster, concrete, and masonry shall be tested with an electric moisture meter and reading shall be not more than 5 percent. Masonry walls shall have flush joints. Concrete and masonry walls shall be coated with a thin coat of joint compound or cement plaster as a substrate preparation. To promote adequate adhesion of wall lining over masonry walls, the walls shall be primed as recommended by the wall lining manufacturer. Surface of walls shall be primed as required by manufacturer's instructions to permit ultimate removal of wallcovering from the wall surface. Primer shall be allowed to completely dry before adhesive application.

3.3 INSTALLATION

3.3.1 Vinyl and Fabric Wallcovering

Wallcovering shall be installed in accordance with the manufacturer's installation instructions. Glue and adhesive spillage shall be immediately removed from wallcovering face and seams with a remover recommended by the manufacturer. After the installation is complete, the fabric wallcovering shall be vacuumed with a ceiling to floor motion.

3.3.2 Wall Panels

Wall panels shall be installed in accordance with the manufacturer's printed instructions. Temperature at the time of installation must be between 18-24 degrees C (65-75 degrees F.) and shall be maintained for at least 48 hours after the installation to allow for proper adhesive set up. Relative humidity shall not exceed 80 percent. Do not expose wall panels to direct sunlight during or after installation. Do not install wall panels in any rooms that will experience more than a 12 degree C (20 degree F) temperature change.

3.3.3 Corner Guards and Wainscot Cap

Corner guards and wainscot cap shall be installed where shown on the drawings and in accordance with the manufacturer's printed instructions. Corner guards shall run from top of base to wainscot cap in a continuous length.

3.4 CLEAN-UP

Upon completion of the work, wallcovering shall be left clean and free of dirt or soiling. Wall panels and accessories shall be cleaned in accordance with manufacturer's recommended cleaning method. Surplus materials, rubbish, and debris resulting from the wallcovering and wall panels installation shall be removed and area shall be left clean.

END OF SECTION

SECTION 09900

PAINTING, GENERAL

1 PART 1 - GENERAL

1.1 REFERENCES

The publications listed below form a part of this specification to the extent referenced. The publications are referred to in the text by basic designation only.

AMERICAN CONFERENCE OF GOVERNMENTAL INDUSTRIAL HYGIENISTS (ACGIH)

ACGIH-02	(1996) Threshold Limit Values for Chemical Substances and Physical Agents and Biological Exposure Indices

AMERICAN SOCIETY FOR TESTING AND MATERIALS (ASTM)

ASTM D 3273	(1994) Resistance to Growth of Mold on the Surface of Interior Coating in an Environmental Chamber
ASTM D 3274	(1995) Evaluating Degree of Surface Disfigurement of Paint Films by Microbial (Fungal or Algal) Growth or Soil and Dirt Accumulation
ASTM D 4214	(1989) Evaluating the Degree of Chalking of Exterior Paint Films
ASTM D 4258	(1988; R 1992) Surface Cleaning Concrete for Coating

COMMERCIAL ITEM DESCRIPTIONS (CID)

CID A-A-1500	(Rev A) Sealer, Surface (Latex Block Filler)

FEDERAL SPECIFICATIONS (FS)

FS TT-C-555	(Rev B; Am 1) Coating, Textured (for Interior and Exterior Masonry Surfaces)

STEEL STRUCTURES PAINTING COUNCIL (SSPC)

SSPC SP 1	(1982) Solvent Cleaning
SSPC SP 2	(1995) Hand Tool Cleaning
SSPC SP 3	(1995) Power Tool Cleaning
SSPC SP 7	(1994) Brush-Off Blast Cleaning

1.2 SUBMITTALS

Government approval is required for submittals with a "GA" designation; submittals having an "FIO" designation are for information only. The following shall be submitted in accordance with Section 01330 SUBMITTAL PROCEDURES:

SD-01 Data

Paint; FIO.

The names, quantity represented, and intended use for the proprietary brands of materials proposed to be substituted for the specified materials when the required quantity of a particular batch is 200 L or less.

SD-06 Instructions

Mixing and Thinning; FIO. Application; FIO.

Manufacturer's current printed product description, material safety data sheets (MSDS) and technical data sheets for each coating system.

SD-09 Reports

Paint; FIO.

A statement as to the quantity represented and the intended use.

SD-13 Certificates

Lead; FIO. Mildewcide and Insecticide; FIO. Volatile Organic Compound (VOC) Content; FIO.

Certificate stating that paints for interior use contain no mercurial mildewcide or insecticide. Certificate stating that paints proposed for use contain not more than 0.06 percent lead by weight of the total nonvolatile. Certificate stating that paints proposed for use meet Federal VOC regulations and those of the of the local Air Pollution Control Districts having jurisdiction over the geographical area in which the project is located.

SD-14 Samples

Paint; FIO.

The contents of the containers to be sampled shall be thoroughly mixed to ensure that the sample is representative. Samples shall be identified by designated name, specification number, manufacturer name and address, batch number, project contract number, intended use, and quantity involved.

1.3 PACKAGING, LABELING, AND STORING

Paints shall be in sealed containers that legibly show the designated name, formula or specification number, batch number, color, quantity, date of manufacture, manufacturer's formulation number,

manufacturer's directions including any warnings and special precautions, and name of manufacturer. Pigmented paints shall be furnished in containers not larger than 20 liters. Paints and thinner shall be stored in accordance with the manufacturer's written directions and as a minimum stored off the ground, under cover, with sufficient ventilation to prevent the buildup of flammable vapors and at temperatures between 4 and 35 degrees C. Paints shall be stored on the project site or segregated at the source of supply sufficiently in advance of need to allow 30 days for testing.

1.4 ENVIRONMENTAL CONDITIONS

Unless otherwise recommended by the paint manufacturer, the ambient temperature shall be between 7 and 35 degrees C when applying coatings other than water-thinned, epoxy, and moisture-curing polyurethane coatings. Water-thinned coatings shall be applied only when ambient temperature is between 10 and 32 degrees C. Epoxy, and moisture-curing polyurethane coatings shall be applied only within the minimum and maximum temperatures recommended by the coating manufacturer. Moisture-curing polyurethane shall not be applied when the relative humidity is below 30 percent.

1.5 SAFETY AND HEALTH

Work shall comply with applicable Federal, State, and local laws and regulations, and with the ACCIDENT PREVENTION PLAN, including the Activity Hazard Analysis as specified in the CONTRACT CLAUSES. The Activity Hazard Analysis shall include analyses of the potential impact of painting operations on painting personnel and on others involved in and adjacent to the work zone.

1.5.1 Worker Exposures

Exposure of workers to hazardous chemical substances shall not exceed limits established by ACGIH-02, or as required by a more stringent applicable regulation.

1.5.2 Toxic Compounds

Toxic products having ineffective physiological warning properties, such as no or low odor or irritation levels, shall not be used unless approved by the Contracting Officer.

1.5.3 Training

Workers having access to an affected work area shall be informed of the contents of the applicable material safety data sheets (MSDS) and shall be informed of potential health and safety hazard and protective controls associated with materials used on the project. An affected work area is one which may receive mists and odors from the painting operations. Workers involved in preparation, painting and clean-up shall be trained in the safe handling and application, and the exposure limit, for each material which the worker will use in the project. Personnel having a need to use respirators and masks shall be instructed in the use and maintenance of such equipment.

1.5.4 Coordination

Work shall be coordinated to minimize exposure of building occupants, other Contractor personnel, and visitors to mists and odors from preparation, painting and clean-up operations.

2 PART 2 - PRODUCTS

2.1 PAINT

The term "paint" as used herein includes emulsions, enamels, paints, stains, varnishes, sealers, cement-emulsion filler, and other coatings, whether used as prime, intermediate, or finish coat. Paint shall conform to the requirements listed in the painting schedules at the end of this section, except when the required amount of a material of a particular batch is 200 liters or less, an approved first-line proprietary paint material with similar intended formulation, usage and color to that specified may be used. Additional requirements are as follows:

2.1.1 Colors and Tints

Colors shall be as selected from manufacturer's standard colors, as indicated. Manufacturer's standard color is for identification of color only. Tinting of epoxy and urethane paints shall be done by the manufacturer. Stains shall conform in shade to manufacturer's standard color. The color of the undercoats shall vary slightly from the color of the next coat.

2.1.2 Mildewcide and Insecticide

Paint specified for all coats applied to fabrics and vapor barrier jackets over insulation and surfaces in areas exposed to view shall contain a mildewcide that will not adversely affect the color, texture, or durability of the coating. The mildewcide shall be incorporated into the paint by the manufacturer and shall attain a surface disfigurement rating of 8 or greater when tested in accordance with ASTM D 3273 and evaluated in accordance with ASTM D 3274. Mercurial mildewcide shall not be used in interior paint. Insecticides shall not be used in paint.

2.1.3 Lead

Paints containing lead in excess of 0.06 percent by weight of the total nonvolatile content (calculated as lead metal) shall not be used.

2.1.4 Chromium

Paints containing zinc chromate or strontium chromate pigments shall not be used.

2.1.5 Volatile Organic Compound (VOC) Content

Paints shall comply with applicable federal, state and local laws enacted to insure compliance with Federal Clean Air Standards and shall conform to the restrictions of the local air pollution control authority.

3 PART 3 - EXECUTION

3.1 PROTECTION OF AREAS NOT TO BE PAINTED

Items not to be painted which are in contact with or adjacent to painted surfaces shall be removed or protected prior to surface preparation and painting operations. Items removed prior to painting shall be replaced when painting is completed. Following completion of painting, workmen skilled in the trades

involved shall reinstall removed items. Surfaces contaminated by coating materials shall be restored to original condition.

3.2 SURFACE PREPARATION

Surfaces to be painted shall be clean and free of foreign matter before application of paint or surface treatments. Oil and grease shall be removed prior to mechanical cleaning. Cleaning shall be programmed so that dust and other contaminants will not fall on wet, newly painted surfaces. Exposed ferrous metals such as nail heads on or in contact with surfaces to be painted with water-thinned paints, shall be spot-primed with a suitable corrosion-inhibitive primer capable of preventing flash rusting and compatible with the coating specified for the adjacent areas.

3.2.1 Concrete and Masonry Surfaces

3.2.1.1 Masonry Walls

Masonry surfaces shall be allowed to dry at least 30 days before painting. Surfaces shall be cleaned in accordance with ASTM D 4258. Glaze, efflorescence, laitance, dirt, grease, oil, asphalt, surface deposits of free iron and other foreign matter shall be removed prior to painting.

3.2.2 Ferrous Surfaces

Ferrous surfaces including those that have been shop-coated, shall be solvent-cleaned or detergent-washed in accordance with SSPC SP 1. Surfaces that contain loose rust, loose mill scale, and other foreign substances shall be cleaned mechanically with hand tools according to SSPC SP 2, power tools according to SSPC SP 3 or by sandblasting according to SSPC SP 7. Shop-coated ferrous surfaces shall be protected from corrosion by treating and touching up corroded areas immediately upon detection.

3.2.3 Nonferrous Metallic Surfaces

Galvanized, aluminum and aluminum-alloy, lead, copper, and other nonferrous metal surfaces shall be solvent-cleaned or detergent-washed in accordance with SSPC SP 1.

3.2.4 Gypsum Board Surfaces

Gypsum board surfaces shall be dry and shall have all loose dirt and dust removed by brushing with a soft brush, rubbing with a cloth, or vacuum-cleaning prior to application of the first-coat material. A damp cloth or sponge may be used if paint will be water-based.

3.3 MIXING AND THINNING

When thinning is approved as necessary to suit surface, temperature, weather conditions, or application methods, paints may be thinned in accordance with the manufacturer's directions. When thinning is allowed, paints shall be thinned immediately prior to application with not more than 0.125 L of suitable thinner per liter. The use of thinner shall not relieve the Contractor from obtaining complete hiding, full film thickness, or required gloss. Thinning shall not cause the paint to exceed limits on volatile organic compounds. Paints of different manufacturers shall not be mixed.

3.4 APPLICATION

Painting practices shall comply with applicable federal, state and local laws enacted to insure compliance with Federal Clean Air Standards. Unless otherwise specified or recommended by the paint manufacturer, paint may be applied by brush, roller, or spray. At the time of application, paint shall show no signs of deterioration. Uniform suspension of pigments shall be maintained during application. Each coat of paint shall be applied so dry film shall be of uniform thickness and free from runs, drops, ridges, waves, pinholes or other voids, laps, brush marks, and variations in color, texture, and finish. Hiding shall be complete. Rollers for applying paints and enamels shall be of a type designed for the coating to be applied and the surface to be coated. Special attention shall be given to insure that all edges, corners, crevices, welds, and rivets receive a film thickness equal to that of adjacent painted surfaces. Paints, except water-thinned types, shall be applied only to surfaces that are completely free of moisture as determined by sight or touch.

3.4.1 Ventilation

Affected areas shall be ventilated during paint application so that workers exposure to chemical substances shall not exceed limits as established by ACGIH-02, or as required by a more stringent applicable regulation. Interior work zones having a volume of 280 cubic meters or less shall be ventilated at a minimum of 2 air exchanges per hour. Ventilation in larger work zones shall be maintained by means of mechanical exhaust. Solvent vapors shall be exhausted outdoors, away from air intakes and workers. Return air inlets in the work zone shall be temporarily sealed before start of work until the coatings have dried.

3.4.2 Respirators

Operators and personnel in the vicinity of operating paint sprayers shall wear respirators.

3.4.3 First Coat

The first coat on gypsum wallboard and other surfaces shall include repeated touching up of suction spots or overall application of primer or sealer to produce uniform color and gloss. Excess sealer shall be wiped off after each application. The first coat on both faces of wood doors shall be applied at essentially the same time. Glazed doors and sashes shall be given the specified coating system within 3 weeks of the time they are glazed, but not before the glazing material has set; paint shall overlay glass about 1.78 mm all around. Each varnish coat shall be sanded lightly prior to application of subsequent coats.

3.4.4 Timing

Surfaces that have been cleaned, pretreated, and otherwise prepared for painting shall be given a coat of the specified first coat as soon as practical after such pretreatment has been completed, but prior to any deterioration of the prepared surface. Sufficient time shall elapse between successive coats to permit proper drying. This period shall be modified as necessary to suit weather conditions. Oil-based or oleoresinous solvent-type paints shall be considered dry for recoating when the paint feels firm, does not deform or feel sticky under moderate pressure of the thumb, and the application of another coat of paint does not cause the undercoat to lift or lose adhesion. Manufacturer's instructions for application, curing and drying time between coats of two-component systems shall be followed.

3.4.5 Stains

Stain shall be applied at the rate specified in the manufacturer's printed directions. Oil-type stain shall be applied by brushing with the grain for the full length of the member.

3.4.6 Fillers

Masonry surface voids shall be filled; however, surface irregularities need not be completely filled. The dried filler shall be uniform and free of pinholes. Filler shall not be applied over caulking compound.

3.4.6.1 Latex Filler

Latex filler, CID A-A-1500, shall be applied according to the manufacturer's instructions. Surface voids shall be filled and excess filler shall be removed from the surface with a rubber squeegee. The filler shall be allowed to dry the length of time specified by the manufacturer prior to applying successive coats of paint.

3.4.7 Ferrous-Metal Primer

Primer for ferrous-metal shall be applied to ferrous surfaces to receive paint prior to deterioration of the prepared surface. The semitransparent film applied to some pipes and tubing at the mill is not to be considered a shop coat, but shall be overcoated with the specified ferrous-metal primer prior to application of finish coats. Prime all bolts, nuts, and field welds after erection.

3.5 SURFACES TO BE PAINTED

Surfaces listed in the following list and in the painting schedules at the end of this section, other than those listed in paragraph SURFACES NOT TO BE PAINTED, shall be painted as scheduled.

a. Interior wall mounted factory finished items, which might traditionally retain their factory finish, such as fire extinguisher cabinets, fire alarm bells and strobes, thermostats, mechanical grilles, electrical device plates, etc., shall be painted to match the adjacent wall color. Fire alarm pull stations shall be factory finished red.

b. Exterior factory finished items, which might traditionally retain their factory finish, such as signposts, bollards, mechanical and electrical equipment, etc., shall be painted to match Fed. Std. 595(b) #20062.

3.6 SURFACES NOT TO BE PAINTED

Surfaces in the following areas shall not to be painted: areas above finished ceilings. In addition, surfaces of hardware, fittings, and other factory finished items shall not be painted.

3.7 CLEANING

Cloths, cotton waste and other debris that might constitute a fire hazard shall be placed in closed metal containers and removed at the end of each day. Upon completion of the work, containers shall be removed from the, paint and other deposits on adjacent surfaces shall be removed and the entire job left clean and acceptable.

3.8 PAINTING SCHEDULES

The following painting schedules identify the surfaces to be painted and prescribe the paint to be used and the number of coats of paint to be applied. Brands listed and their abbreviations are: Devoe & Raynolds Co., DR; Glidden Co., GL; PPG Architectural Finishes Inc., PP; Sherwin-Williams Co., SW; and Tnemec Co., TC. Products listed are for level of quality only and other manufacturer's providing products comparable to these may submit their products for approval.

INTERIOR PAINTING SCHEDULE

Surface	First Coat	Second Coat	Third Coat
Gypsum board: unless otherwise specified.	Latex Primer: SW - ProMar 200 Latex Primer B28 W 200 DR - Wonder-Tones Vinyl Latex Primer #50801 GL - Ultra-Hide PVA Primer #5019	Alkyd Paint: SW - ProMar 200 Alkyd Semi-Gloss Enamel B34 W 200 DR - Velour Semi-Gloss Interior Alkyd Enamel #26XX GL - Spred Lustre Semi-Gloss Enamel #4600 Series	Alkyd Paint: SW - ProMar 200 Alkyd Semi-Gloss Enamel B34 W 200 DR - Velour Semi-Gloss Interior Alkyd Enamel #26XX GL - Spred Lustre Semi-Gloss Enamel #4600 Series
Gypsum board: for locker ceilings.	Latex Primer: SW - ProMar 200 Latex Primer B28 W 200 DR - Wonder-Tones Vinyl Latex Primer #50801 GL - Ultra-Hide PVA Primer #5019	Epoxy Paint: SW - Water Based Catalyzed Epoxy B70/B60 V 25 DR - Tru-Glaze-WB Waterborne Epoxy Semi-Gloss #128XX/12902 GL - Glid-Guard Water Base Epoxy Enamel #5585	Epoxy Paint: SW - Water Based Catalyzed Epoxy B70/B60 V 25 DR - Tru-Glaze-WB Waterborne Epoxy Semi-Gloss #128XX/12902 GL - Glid-Guard Water Base Epoxy Enamel #5585
Concrete masonry units: unless otherwise specified.	Primer/Filler: SW - ProMar Ext/Int Block Filler B25 W 25 DR - Bloxfil 200 Interior-Exterior Latex Block Filler #52902 GL - Ultra-Hide Block Filler, Latex Interior-Exterior #5317	Alkyd Paint: SW - ProMar 200 Alkyd Semi-Gloss Enamel B34 W 200 DR - Velour Semi-Gloss Interior Alkyd Enamel #26XX GL - Spred Lustre Semi-Gloss Enamel #4600 Series	Alkyd Paint: SW - ProMar 200 Alkyd Semi-Gloss Enamel B34 W 200 DR - Velour Semi-Gloss Interior Alkyd Enamel #26XX GL - Spred Lustre Semi-Gloss Enamel #4600 Series

Surface	First Coat	Second Coat	Third Coat
Ferrous metal: factory or shop primed or painted, including mechanical and other equipment.	Factory primer or paint.	Alkyd Paint: SW - ProMar 200 Alkyd Semi-Gloss Enamel B34 W 200 DR - Velour Semi-Gloss Interior Alkyd Enamel #26XX GL - Spred Lustre Semi-Gloss Enamel #4600 Series	Alkyd Paint: SW - ProMar 200 Alkyd Semi-Gloss Enamel B34 W 200 DR - Velour Semi-Gloss Interior Alkyd Enamel #26XX GL - Spred Lustre Semi-Gloss Enamel #4600 Series
Metal: Exposed overhead decking, joists, beams, conduit, uninsulated ducts and pipes, and pipe hangers.	Dryfall Paint: SW - Waterborne Acrylic Dry Fall B42 W 1 DR - Uni-Grip-WB Waterborne Acrylic Flat Dry Fog #57601 GL - Ultra-Hide Spray-Day-Lite Latex Dry Fog #5023	None	None
Wood: Plywood equipment mounting backboards.	Primer: GL - Glidden Wood Undercoater #310 PP - Speedhide Quick-Drying Undercoater #6-6	Fire Retardant (Vinyl Acetate) Paint: GL - Ultra-Hide Insul-Blaze Fire Retardant Coating #5030 PP - Speedhide Interior Fire Retardant Flat Latex #42-7	None
Gymnasium wood floor	2 coats sealer modified ureothane	2 coats finish modified urethane	None
Play court marking		1 coat Alkyd Enamel	None

-- END OF SECTION --

SECTION 10100

DIRECTORY AND TACKBOARD

PART 1 GENERAL

1.1 APPLICABLE PUBLICATIONS

The publications listed below form a part of this specification to the extent referenced. The publications are referred to in the text by the basic designation only.

AMERICAN SOCIETY FOR TESTING AND MATERIALS (ASTM)

ASTM B 221 (1982) Aluminum-Alloy Extruded Bars, Rods, Wire, Shapes, and Tubes

FEDERAL SPECIFICATION (FED. SPEC.)

AA-B-1976/1 Bulletin Boards; Metal Frame

PORCELAIN ENAMEL INSTITUTE (PEI)

Performance Specifications for Porcelain Enamel Steel Chalkboards

1.2 SUBMITTALS

Government approval is required for submittals with a “GA” designation; submittals having an “FIO” designation are for information only. The following shall be submitted in accordance with Section 01300 SUBMITTALS:

Drawings

Shop Drawings; GA.

Shop drawings and installation details shall be submitted.

Certificates

Certificate of Compliance; FIO.

Certificates attesting that the installed materials meet the requirements specified shall be submitted.

1.3 DELIVERY AND STORAGE

Materials shall not be delivered to the site until the location of installation is finished, including painting, so that when the units are delivered, they can be immediately installed, thus minimizing possibility of damage. Materials when delivered shall be dry, free of warpage, and have packaging intact.

1.4 WARRANTY

Manufacturers' standard performance guarantees or warranties that extend beyond a period of one year shall be provided.

PART 2 PRODUCTS

2.1 DIRECTORY BOARD

2.1.1 Directory board shall be aluminum frame, dark bronze color anodized finish, background changeable letter board in grooved cork in black. Size shall be 1200 mm high by 900 mm wide. Message shall consist of a single line key plan, showing the building outline with labels consisting of "You Are Here" and location of major room names. These room names are Gym, Weight Room, Exercise Room, Men's Locker Room, and Women's Locker Room. Signage shall be similar to the plaque signs in Section 10440. Minimum size shall be 300 mm high by 400 mm wide. Letters shall be 3 mm minimum, 5 mm maximum.

2.2 TACKBOARD

2.2.1 Cork

Tackboard shall consist of a minimum 6 mm thick colored cork with burlap backing laminated to a minimum 6 mm thick hardboard. Color shall be as indicated on the drawings.

2.2.2 Sliding Glass Case Frame

The tackboard shall be a horizontal sliding unit and shall be composed of a fixed back panel, sliding glass panels, an aluminum track assembly and an oak frame. The unit shall have two tracks. The fixed back panel shall be tackboard. The track assembly and exposed members, including panel edging shall be extruded aluminum. The overall depth shall be 4 inches, and recessed into the wall with edge moulding to conceal the rough opening. Sliding panels shall be suspended from the top and shall slide over the aluminum track using molded nylon ball bearing rollers at the top of the track and nylon guide rollers at the bottom of the track to eliminate vibration and to provide quiet and smooth operation of the panels. The size shall be 900 mm high x 1200 mm wide.

2.2.3 Glass

Glass shall be 6 mm thick tempered safety glass.

PART 3 EXECUTION

3.1 INSTALLATION

3.1.1 Deliver factory built directory board and markerboard to jobsite in one piece, completely assembled.

3.1.2 Install all items specified in this section accurately, in locations and at mounting heights shown on the drawings, and in accordance with manufacturer's instructions.

3.1.3 Provide anchoring devices and fasteners as shown and as necessary for securing boards to building construction.

END OF SECTION

SECTION 10160

TOILET PARTITIONS

PART 1 GENERAL

1.1 REFERENCES

The publications listed below form a part of this specification to the extent referenced. The publications are referred to in the text by basic designation only.

AMERICAN SOCIETY FOR TESTING AND MATERIALS (ASTM)

ASTM E 84	(1998) Surface Burning Characteristics of Building Materials

CODE OF FEDERAL REGULATIONS (CFR)

36 CFR 1191	Americans with Disabilities Act (ADA) Accessibility Guidelines for Buildings and Facilities

FEDERAL STANDARDS (FED-STD)

FED-STD 795	(Basic) Uniform Federal Accessibility Standards

NATIONAL FIRE PROTECTION ASSOCIATION

NFPA 101	(1997) Life Safety Code

1.2 SYSTEM DESCRIPTION

Toilet partition system, including toilet enclosures, and urinal screens, shall be a complete and usable system of panels, hardware, and support components. The partition system shall be provided by a single manufacturer and shall be a standard product as shown in the manufacturer's most recent catalog data. The partition system shall comply with FED-STD 795 and 36 CFR 1191 for areas shown.

1.3 SUBMITTALS

Government approval is required for submittals with a "GA" designation; submittals having an "FIO" designation are for information only. The following shall be submitted in accordance with Section 01330 SUBMITTALS:

Data

Toilet Partition System; FIO.

Manufacturer's technical data and catalog cuts including installation and cleaning instructions.

Drawings

Toilet Partition System; FIO.

Drawings showing plans, elevations, details of construction, hardware, reinforcing, fittings, mountings, and anchorings.

Samples

Toilet Partition System; FIO.

Manufacturer's standard color charts and color samples.

1.4 DELIVERY, STORAGE, AND HANDLING

Components shall be delivered to the jobsite in the manufacturer's original packaging with the brand, item identification, and project reference clearly marked. Components shall be stored in a dry location that is adequately ventilated and free from dust, water, or other contaminants and shall have easy access for inspection and handling.

1.5 WARRANTY

Manufacturer's standard performance guarantees or warranties that extend beyond a 1 year period shall be provided.

PART 2 PRODUCTS

2.1 TOILET ENCLOSURES URINAL AND SHOWER SCREENS

Toilet enclosures shall be ceiling mounted with non-corrosive doors, panels and pilasters fabricated from dual component compresion molded High Density Polyethylene (HDPE) or solid phenolic virgin resin materials in colors that extend throughout surface to surface. Doors panels, and pilasters shall be a minimum of 25 mm thick and all edges machined to a radius of 6 mm and all exposed surfaces shall be free of saw marks. Width, length and height of toilet enclosures (including pilasters) and urinal screens shall be as indicated on the drawings. Mounting height of doors and panels shall be 300 mm above finished floor. Finish surface of panels shall be waterproof, non-absorbent, and self-lubricating to resist marking with writing utensils. Panels indicated to receive toilet paper holders as specified in Section 10800 TOILET ACCESSORIES shall be reinforced for the reception of the items required.

2.2 HARDWARE AND ACCESSORIES

2.2.1 Door hardware shall be as follows:

- Hinges shall be integral hinge system fabricated from heavy duty aluminum extrusion (6463-T5 alloy) with clear anodized finish with wrap around flanges, surface mounted and through-bolted to doors and pilasters with one-way sex bolts. Pilaster to be machined to accept door and hinge mechanism. Door closures to be factory set to accommodate all conditions and allow for a positive opening and closing action free of impediment.

- Each door shall be furnished with 1 coat hook.

- Door strike and keeper shall be fabricated from heavy aluminum extrusion (6364-G5 Alloy) with clear anodized finish with wrap around flange surface mounted and through-bolted to pilaster with one-way sex bolts. Size of strike shall be 152 mm in length.

- Door latch housing shall be fabricated from heavy aluminum extrusion (6364-T5 Alloy) with clear anodized finish surface mounted and through-bolted to door with one-way sex bolts.

2.2.2 Solid color plastic pilaster shoes shall be anchored to finished floor with plastic anchors and 6 mm (No. 14) by 38 mm stainless steel phillips head screws.

2.2.3 Full length continuous plastic wall brackets shall be solid color weighing not less than 1.22 kg per meter. Brackets shall be used for all panels to pilaster, pilasters to wall and panel to wall connections. Wall brackets shall be through-bolted to panels and pilasters with one-way sex bolts. Attachment of brackets to adjacent wall construction shall be accomplished by 6 mm (No. 14) by 38 mm stainless steel phillips head screws anchored directly behind the vertical edge of panels and pilasters at 300 mm intervals along the full length of bracket and at each 300 mm interval alternately spaced between anchor connections.

2.2.4 Headrail shall be heavy aluminum extrusion (6364-T5 Alloy) with mill finish in anti-grip configuration weighing not less than 1.77 kg per meter. Headrail shall be fastened to tops of pilasters and headrail brackets by through-bolting with one-way stainless steel sex bolts (cadium plated sex bolts are not acceptable).

2.2.5 Headrail brackets shall be stainless steel, thickness 1.2 mm.

2.3 COLORS

Color of finishes for toilet partition system components shall be as indicated on the drawings. Manufacturer's name(s) are for color identification purposes only and are not intended to limit selection or to be proprietory.

2.4 FIRE PERFORMANCE

When tested in accordance with ASTM E 84, the partition material shall have fire performance characteristics as specified for NFPA class B interior finish.

PART 3 EXECUTION

3.1 INSTALLATION

Toilet partitions shall be installed straight and plumb in accordance with approved manufacturer's instructions with horizontal lines level and rigidly anchored to the supporting construction. Where indicated, anchorage to walls shall be by toggle-bolting. Drilling and cutting for installation of anchors shall be at locations that will be concealed in the finished work.

3.2 ADJUSTING AND CLEANING

Doors shall have a uniform vertical edge clearance of not more than 6 mm and shall rest open at approximately 30 degrees when unlatched. Severly damaged partitions shall be removed and replaced. Toilet partitions shall be cleaned in accordance with approved manufacturer's instructions and shall be protected from damage until accepted.

END OF SECTION

SECTION 10200

EXTERIOR LOUVERS AND VENTS

PART 1 - GENERAL

1.1 REFERENCES

The publications listed below form a part of this specifications to the extent referenced. The publications are referred to in the text by basic designation only.

AIR MOVEMENT AND CONTROL ASSOCIATION (AMCA)

AMCA 500	(1989) Test Methods for Louvers, Dampers, and Shutters
AMCA 501	(1993) Application Manual for Air Louvers

ALUMINUM ASSOCIATION (AA)

AA DAF-45	(1980) Designation System for Aluminum Finishes

AMERICAN ARCHITECTURAL MANUFACTURERS ASSOCIATION (AAMA)

AAMA 605.2	(1992; Addenda February 1994) Voluntary Specification for High Performance Organic Coatings on Architectural Aluminum Extrusions and Panels

AMERICAN SOCIETY FOR TESTING AND MATERIALS (ASTM)

ASTM B 209M	(1995) Aluminum and Aluminum-Alloy Sheet and Plate- Metric
ASTM B 221M	(1995, Rev A) Aluminum and Aluminum-Alloy Extruded Bars, Rods, Wire, Shapes, and Tubes- Metric
ASTM C 612	(1993) Mineral Fiber Block and Thermal Insulation Board

AMERICAN WELDING SOCIETY (AWS)

AWS D1.2	(1990) Structural Welding Code, Aluminum
AWS D1.3	(1989) Structural Welding Code, Sheet Steel; Second Edition

NATIONAL ASSOCIATION OF ARCHITECTURAL METAL MANUFACTURERS (NAAMM)

Metal Finishes Manual; Latest Edition

SHEET METAL AND AIR CONDITIONING CONTRACTOR'S NATIONAL ASSOCIATION (SMACNA)

(1993) Architectural Sheet Metal Manual; Fifth Edition

STEEL STRUCTURES PAINTING COUNCIL (SSPC)

SSPC Paint 12 (1991) Cold-Applied Asphalt Mastic (Extra Thick Film)

1.2 DEFINITIONS

Louver Terminology

Refer to AMCA 501 for definitions of terms for metal louvers not otherwise defined in this Section or in referenced standards.

1.3 PERFORMANCE REQUIREMENTS

1.3.1 Structural Performance

Fabricate, and install exterior metal wall louvers to withstand the effects of loads and stresses from wind and normal thermal movement without evidencing permanent deformation of louver components including blades, frames, and supports; noise or metal fatigue caused by louver blade rattle or flutter; or permanent damage to fasteners and anchors.

1.3.1.1 Wind Load

Uniform pressure (velocity pressure) of 300 kg per square meter (60 lbs per square feet), acting inwards or outwards.

1.3.1.2 Normal thermal movement is defined as that resulting from the following maximum change (range) in ambient temperature. Base design calculations on actual surface temperatures of metals due to both solar heat gain and nighttime sky heat loss.

1.3.1.2.1 Temperature Change (Range): 56 degrees C (100 degrees F) .

1.3.2 Air-Performance, Water-Penetration, and Air-Leakage Ratings

Provide louvers complying with performance requirements indicated as demonstrated by testing manufacturer's stock units of height and width indicated. Test units according to AMCA 500.

1.3.2.1 Perform testing on unpainted, cleaned, degreased units.

1.3.2.2 Perform water-penetration testing on louvers without screens.

1.3.2.3 Equivalent Air-Performance Ratings

Louvers having less free area than that specified or having a lower free area velocity at the static pressure loss specified may be considered for the Work provided their total air performance is equivalent to that specified. The burden of proof of equivalency is on the Contractor. For louvers to be considered equivalent, the product of their free area, for the size specified, and their free area velocity at the static pressure loss specified must be at least equal to the product of the specified free area and velocity. Also, their free area velocity at the static pressure loss specified must not result in water penetration of more than 3.1 grams per square meters (0.01 oz. per square foot) of free area, and they must meet all other requirements.

1.4 SUBMITTALS

Government approval is required for submittals with a "GA" designation; submittals having an "FIO" designation are for information only. The following shall be submitted in accordance with Section 01330 SUBMITTALS:

Data

Louvers and Vents; FIO

Product data for each type of product specified.

Drawings

Louvers; GA

Shop drawings of louver units and accessories. Include plans, elevations, sections, and details showing profiles, angles, and spacing of louver blades; unit dimensions related to wall openings and construction; free areas for each size indicated; profiles of frames at jambs, heads, and sills; and anchorage details and locations.

Samples

Metal Finish; FIO

Samples for verification of each type of metal finish required, prepared on samples of same thickness and material indicated for final unit of work. Where finishes involve normal color and texture variations, include sample sets showing the full range of variations expected.

Reports

Louvers and Vents; GA

Product test reports evidencing compliance of units with performance requirements indicated.

Certificates

Louvers and Vents; GA

Product certificates signed by louver manufacturers certifying that their products comply with the specified requirements and are licensed to bear the AMCA seal based on tests made according to AMCA 500 and complying with the AMCA Certified Ratings Program.

Statements

Qualification Data; FIO

Qualification data for firms and persons specified to demonstrate their capabilities and experience.

1.5 DESIGN REQUIREMENTS

1.5.1 Single Source Responsibility

Obtain louvers and vents from one source and by a single manufacturer where alike in one or more respects regarding type, design, and factory-applied color finish.

1.5.2 Welding Standards

Comply with applicable provisions of AWS D1.2 and AWS D1.3.

1.5.2.1 Certify that each welder has satisfactorily passed AWS qualification tests for welding processes involved and, if pertinent, has undergone recertification.

1.5.3 SMACNA Standard

Comply with SMACNA Architectural Sheet Metal Manual recommendations for fabrication, construction details, and installation procedures.

1.5.4 UL and NEMA Compliance

Provide motors and related components for motor-operated adjustable louvers that are listed and labeled by UL and comply with applicable NEMA standards.

1.6 PROJECT CONDITIONS

1.6.1 Field Measurements

Check actual louver openings by accurate field measurements before fabrication, and show recorded measurements on final shop drawings. Coordinate fabrication schedule with construction progress to avoid delaying the work.

1.6.1.1 Where field measurements cannot be made without delaying the work, guarantee opening dimensions and proceed with fabricating louvers without field measurements. Coordinate construction to ensure that actual opening dimensions correspond to guaranteed dimensions.

PART 2 - PRODUCTS

2.1 MATERIALS

2.1.1 Aluminum Extrusions

ASTM B 221M, Alloy 6063-T5 or T-52.

2.1.2 Aluminum Sheet

ASTM B 209M, Alloy 3003 or 5005 with temper as required for forming, or as otherwise recommended by metal producer to produce required finish.

2.1.3 Fasteners

Of same basic metal and alloy as fastened metal or 300 series stainless steel, unless otherwise indicated. Do not use metals that are corrosive or incompatible with joined materials.

2.1.3.1 Use types and sizes to suit unit installation conditions.

2.1.3.2 Use phillips flat-head screws for exposed fasteners, unless otherwise indicated.

2.1.4 Anchors and Inserts

Of type, size, and material required for type of loading and installation indicated. Use nonferrous metal or hot-dip galvanized anchors and inserts for exterior installations and elsewhere as required for corrosion resistance. Use toothed steel or expansion bolt devices for drilled-in-place anchors.

2.1.5 Bituminous Paint

Cold-applied asphalt mastic complying with SSPC-Paint 12 except containing no asbestos fibers.

2.2 FABRICATION, GENERAL

2.2.1 General

Fabricate louvers and vents to comply with requirements indicated for design, dimensions, materials, joinery, and performance.

2.2.2 Assemble louvers in shop to minimize field splicing and assembly. Disassemble units as necessary for shipping and handling limitations. Clearly mark units for reassembly and coordinated installation.

2.2.3 Maintain equal louver blade spacing, including separation between blades and frames at head and sill, to produce uniform appearance.

2.2.4 Fabricate frames, including integral sills, to fit in openings of sizes indicated, with allowances made for fabrication and installation tolerances of louvers, adjoining construction, and perimeter sealant joints.

2.2.5 Include supports, anchorages, and accessories required for complete assembly.

2.2.6 Provide vertical mullions of type and at spacings indicated but not more than recommended by manufacturer, or 1830 mm (72 inches) on center, whichever is less. At horizontal joints between louver joints, provide horizontal transoms except where continuous vertical assemblies are indicated.

2.2.7 Provide sill extensions and loose sills made of same material as louvers where indicated or required for drainage to exterior and to prevent water penetrating to interior.

2.2.8 Join frame members to one another and to fixed louver blades as follows, unless otherwise indicated or size of louver assembly makes bolted connections between frame members necessary:

- With fillet welds, concealed from view.

- With fillet welds, concealed from view; or mechanical fasteners; or a combination of these methods; as standard with louver manufacturer.

2.3 COMBINATION, EXTRUDED-ALUMINUM WALL LOUVER DAMPER

2.3.1 Horizontal, Drainable, Fixed-Blade Louvers

Extruded-aluminum frames and louver blades, designed to collect and drain water to exterior at sill by means of gutters in front edges of blades and channels in jambs and mullions, complying with the following requirements:

- Louver Depth: 100 mm (4 inches), unless otherwise indicated.
- Frame Thickness: 2 mm (.081 inch) , unless otherwise indicated.
- Blade Thickness: 2 mm (.081 inch) , unless otherwise indicated.
- Blade Angle: 45 degrees, unless otherwise indicated.
- Performance Requirements: As follows, determined by testing units 1220 mm (48 inches) wide by 1220 mm (48 inches) high per AMCA 500:

a. Free Area: Not less than 0.697 square meter (7.50 square feet).

b. Static Pressure Loss: Not more than (0.14 inch wg) 35 Pa at an airflow of 4.57 m/s (900 fpm) free area intake velocity.

c. Water Penetration: Not more than 12.3 grams/square meter (.04 ounces per square foot) of free area at an airflow of (900 fpm) 4.57 m/s free area velocity when tested for 15 minutes.

- AMCA Seal: Mark units with the AMCA Certified Ratings Seal.

2.4 LOUVER SCREENS

2.4.1 Provide louvers with screens at locations indicated.

2.4.2 Provide each exterior louver with louver screens complying with the following requirements:

- Screen Location for Fixed Louvers: Interior face, unless otherwise indicated
- Screening Type: Insect screening typical.

2.4.3 Secure screens to louver frames with stainless-steel machine screws, spaced 150 mm (6 inches) maximum from each corner and at 300 mm (12 inches) o.c. between.

2.4.4 Louver Screen Frames

Fabricate screen frames with mitered corners to louver sizes indicated and to comply with the following requirements:

- Metal: Same kind and form of metal as indicated for louver frames to which screens are attached. Reinforce extruded-aluminum screen frames at corners with clips.

- Finish: Same finish as louver frames to which louver screens are attached.

- Type: Rewireable frames with a driven spline or insert for securing screen mesh.

2.4.5 Louver Screening for Aluminum Louvers

Fit aluminum louver screen frames with screening covering louver openings and complying with the following requirements:

- Insect Screening: 18 by 18 mesh (18 holes per 25 mm length) formed with 0.23 mm (0.009-inch) diameter stainless steel wire.

2.5 BLANK-OFF PANELS

2.5.1 General

Fabricate blank-off panels from materials and to sizes indicated and to comply with the following requirements:

- Finish: Match finish applied to louver with respect to coating type, except for color, which shall be as follows: Black.

- Attach blank-off panels to back of louver frames with clips and/or stainless steel sheet metal screws.

2.5.2 Uninsulated, Blank-Off Panels

Metal sheet complying with the following requirements:

- Aluminum sheet for aluminum louvers, as follows: Thickness: 1.2 mm, unless otherwise indicated.

2.5.3 Insulated, Blank-Off Panels

Laminated metal-faced panels consisting of insulating core surfaced on back and front with metal sheets, complying with the following requirements:

- Thickness: 25 mm (1 inch).

- Metal Facing Sheets: Aluminum sheet, 0.8 mm thick.

- Insulating Core: Unfaced, rigid, glass-fiberboard insulation complying with ASTM C 612, Class 1 and 2.

- Edge Treatment: Trim perimeter edges of blank-off panels with louver manufacturer's standard extruded aluminum channel frames 2.06 mm (0.081 inch) thick, with corners mitered and with same finish as panels.

- Seal perimeter joints between panel faces and louver frames with 3.2 mm by 25 mm (1/8 inch by 1 inch) polyvinyl chloride compression gaskets.

2.6 FINISHES, GENERAL

2.6.1 Comply with NAAMM Metal Finishes Manual for recommendations relative to applying and designating finishes.

2.6.2 Finish louvers after assembly.

2.7 ALUMINUM FINISHES

2.7.1 Finish designations prefixed by AA conform to the system established by AA DAF-45 for designating aluminum finishes.

2.7.2 High-Performance Organic Coating Finish

AA-C12C42R1x (Chemical Finish: cleaned with inhibited chemicals; Chemical Finish: acid chromate-fluoride-phosphate conversion coating; Organic Coating: as specified herein). Prepare, pretreat, and apply coating to exposed metal surfaces to comply with coating and resin manufacturer" instructions.

2.7.3 Fluoropolymer 3-Coat Coating System

Manufactures standard 3-coat, thermocured system composed of specially formulated inhibitive primer, fluoropolymer color coat, and clear fluoropolymer topcoat, with both color coat and clear topcoat containing not less than 70 percent polyvinylidene fluoride resin by weight; complying with AAMA 605.2

PART 3 - EXECUTION

3.1 PREPARATION

3.1.1 Coordinate setting drawings, diagrams, templates, instructions, and directions for installation of anchorages that are to be embedded in concrete or masonry construction. Coordinate delivery of such items to project site.

3.2 INSTALLATION

3.2.1 Locate and place louver units plumb, level, and at indicated alignment with adjacent work.

3.2.2 Use concealed anchorages where possible. Provide brass or lead washers fitted to screws where required to protect metal surfaces and to make a weathertight connection.

3.2.3 Form closely fitted joints with exposed connections accurately located and secured.

3.2.4 Provide perimeter reveals and openings of uniform width for sealants and joint fillers, as indicated.

3.2.5 Repair finishes damaged by cutting, welding, soldering, and grinding operations required for fitting and jointing. Restore finishes so there is no evidence of corrective work. Return items that cannot be refinished in the field to the shop, make required alterations, and refinish entire unit, or provide new units.

3.2.6 Protect galvanized and nonferrous metal surfaces from corrosion or galvanic action by applying a heavy coating of bituminous paint on surfaces that will be in contact with concrete, masonry, or dissimilar metals.

3.2.7 Install concealed gaskets, flashings, joint fillers, and insulation, as louver installation progresses, where required to make louver joints weathertight. Comply with Section 07900 JOINT SEALING for sealants applied during installation of louver.

3.3 ADJUSTING AND PROTECTION

3.3.1 Protect louvers and vents from damage of any kind during construction period including use of temporary protective coverings where needed and approved by louver manufacturer. Remove protective covering at time of Substantial Completion.

3.3.2 Restore louvers and vents damaged during installation and construction period, so that no evidence remains of correction work. If results of restoration are unsuccessful, as judged by the Contracting Officer, remove damaged units and replace with new units.

3.3.2.1 Clean and touch up minor abrasions in finishes with air-dried coating that matches color and gloss of, and is compatible with, factory-applied finish coating.

3.3.3 Test operation of adjustable wall louvers and adjust as needed to produce fully functioning units that comply with requirements.

3.4 CLEANING

3.4.1 Periodically clean exposed surfaces of louvers and vents that are not protected by temporary covering to remove fingerprints and soil during construction period. Do not let soil accumulate until final cleaning.

3.4.2 Before final inspection, clean exposed surfaces with water and a mild soap or detergent not harmful to finishes. Rinse surfaces thoroughly and dry.

END OF SECTION

This page intentionally blank

SECTION 10440

INTERIOR SIGNAGE

PART 1 GENERAL

1.1 REFERENCES

The publications listed below form a part of this specification to the extent referenced. The publications are referred to in the text by basic designation only.

ALUMINUM ASSOCIATION (AA)

AA PK-1	(1989) Registration Record of Aluminum Association Alloy Designations and Chemical Composition Limits for Aluminum Alloys in the Form of Castings and Ingot
AA SAA-46	(1978) Standards for Anodized Architectural Aluminum

AMERICAN NATIONAL STANDARDS INSTITUTE (ANSI)

ANSI Z97.1	(1984) Safety Glazing Materials Used in Buildings

AMERICAN SOCIETY FOR TESTING AND MATERIALS (ASTM)

ASTM B 209	(1992a) Aluminum and Aluminum-Alloy Sheet and Plate
ASTM B 221	(1992a) Aluminum and Aluminum-Alloy Extruded Bars, Rods, Wire, Shapes, and Tubes

FEDERAL SPECIFICATIONS (FS)

FS L-P-387	(Rev A; Am 1; Int Am 2) Plastic Sheet, Laminated, Thermosetting (for Designation Plates)

FEDERAL STANDARDS (FED-STD)

FED-STD 795	(Basic) Uniform Federal Accessibility Standards

MILITARY SPECIFICATIONS (MS)

MS M-43719	(Rev B; Am 1) Marking Materials and Markers, Adhesive, Elastomeric, Pigmented

1.2 GENERAL

Interior signage shall be of the sizes and types shown on the drawings, shall conform to the requirements specified herein, and shall be provided at the locations indicated. Signs shall be complete with lettering, framing as detailed, and related components for a complete installation. Signs shall be the standard

product of a manufacturer regularly engaged in the manufacture of such products and shall essentially duplicate signs that have been in satisfactory use at least 2 years prior to bid opening.

1.3 SUBMITTALS

Government approval is required for submittals with a "GA" designation; submittals having an "FIO" designation are for information only. The following shall be submitted in accordance with Section 01330 SUBMITTAL PROCEDURES:

SD-01 Data

Interior Signage; FIO

Manufacturer's descriptive data, catalogs cuts and installation instructions.

SD-04 Drawings

Interior Signage; FIO

Drawings shall include elevations of each type of sign and shall show dimensions, details and methods of mounting or anchoring, shape and thickness of materials, and details of construction. A schedule showing the location of each sign type shall be included.

SD-14 Samples

Interior Signage; GA

Samples of the following signs showing typical quality and workmanship. The samples may be installed in the work, provided each sample is identified and location recorded.

a. Direction sign.

b. Door sign.

c. Changeable letter for building directory.

Two samples of manufacturer's standard color chips for each material requiring color selection.

1.4 DELIVERY AND STORAGE

Materials shall be delivered to the jobsite in manufacturer's original packaging and stored in a clean, dry area.

PART 2 PRODUCTS

2.1 ALUMINUM ALLOY PRODUCTS

Aluminum extrusions shall be at least 3 mm thick, and aluminum plate or sheet shall be at least 1.3 mm thick. Extrusions shall conform to ASTM B 221; plate and sheet shall conform to ASTM B 209.

Where anodic coatings are specified, alloy shall conform to AA PK-1 alloy designation 514.0. Exposed anodized aluminum finishes shall be as shown and shall conform to AA SAA-46.

2.2 VINYL SHEETING FOR GRAPHICS

Vinyl sheeting for graphics shall conform to MS MIL-M-43719, minimum 0.8 mm film thickness. Film shall include a precoated pressure sensitive adhesive backing (Class 3).

2.3 ACRYLIC SHEET

Acrylic sheet for panels and components shall conform to ANSI Z97.1.

2.4 ANCHORS AND FASTENERS

Exposed anchor and fastener materials shall be compatible with metal to which applied and shall have matching color and finish.

2.5 FABRICATION AND MANUFACTURE

2.5.1 Workmanship

Holes for bolts and screws shall be drilled or punched. Drilling and punching shall produce clean, true lines and surfaces. Exposed surfaces of work shall have a smooth finish and exposed riveting shall be flush. Fastenings shall be concealed where practicable.

2.5.2 Dissimilar Materials

Where dissimilar metals are in contact, the surfaces will be protected to prevent galvanic or corrosive action.

2.6 PLAQUE SIGNS

Plaque signs shall be a modular type signage system. Signs shall be fabricated of Type ES melamine plastic conforming to FS L-P-387, Type NDP self-extinguishing or acrylic conforming to ANSI Z97.1 as shown. The sign(s) shall be installed at locations shown on the drawings, or as directed by the Contracting Officer.

2.6.1 Standard Modular Plaque Signs

Plaque signs shall consist of matte finish acrylic plastic, laminated to acrylic or plexiglass back, thickness and size as shown. Corners of signs shall be squared. These signs shall be Office Identification Signs. Signs shall be 225 mm in height, 150 mm in width, and utilize 16 mm height Helvetica Medium letters and a pictograph with white background and black symbol. The center of the sign(s) shall be 1500 mm above the floor.

2.6.2 Modular Changeable Message Strip Plaque Signs

Changeable message strip plaque signs shall consist of acrylic or plexiglass back laminated to matte finish acrylic plastic face with message slots as detailed for insertion of paper or plastic changeable

message strips. Individual 1.6 mm thick message strips to permit removal, change, and reinsertion shall be provided as detailed. Corners of signs shall be squared.

2.6.2.1 Office Identification Sign

These sign(s) shall be Office Identification Signs Type BB2 (as referenced in AFP 32-1097, page 137). Signs shall be 225 mm in height, 225 mm in width, and utilize varying height Helvetica Medium letters and numbers. The center of the sign(s) shall be 1500 mm above the floor.

2.6.3 Mounting of Plaque Signs

Surface mounted signs shall be provided with 1.6 mm thick vinyl foam tape or concealed countersunk mounting holes in plaques and mounting screws. Sign inserts shall be provided with 1.6 mm thick foam tape.

2.7 GRAPHICS

2.7.1 Tactile Graphics

Signage that provides emergency information, general circulation directions, or identification of rooms and spaces shall be tactile (perceptible to touch) and shall comply with FED-STD 795, paragraph 4.30. Characters, symbols, or pictographs on tactile signs shall be recessed or raised 0.8 mm minimum. Tactile letters and numbers shall be sans serif upper case. Tactile characters or symbols shall be at least 15 mm high, but no higher than a nominal 50 mm. Characters and symbols shall contrast with their background.

2.7.2 Graphics Application

Signage graphics shall conform to the following:

a. Message shall be acrylic letters 3 mm thick and chemically welded to 3 mm thick acrylic backup sheet or as indicated.

PART 3 EXECUTION

3.1 INSTALLATION

Signs shall be installed at locations shown on the drawings. Signs shall be installed plumb and true at mounting heights indicated, and by method shown or specified. Signs on doors or other surfaces shall not be installed until finishes on such surfaces have been installed.

3.1.1 Anchorage

Anchorage not otherwise specified or indicated shall include toggle bolts and through bolts for masonry; machine carriage bolts for steel; lag bolts and screws for wood. All signage anchorage shall use concealed fasteners.

3.1.2 Protection and Cleaning

The work shall be protected against damage during construction. Hardware shall be adjusted for proper operation. Glass, frames, and other sign surfaces shall be cleaned.

END OF SECTION

This page intentionally blank

SECTION 10505

SOLID PHENOLIC LOCKERS

PART 1 GENERAL

1.1 REFERENCES

The publications listed below form a part of this specification to the extent referenced. The publications are referred to in the text by basic designation only.

AMERICAN SOCIETY FOR TESTING AND MATERIALS (ASTM)

ASTM E 84	(1998 Standrad Test Method for Surface Burning Characteristics of Building Materials

NATIONAL FIRE PROTECTION ASSOCIATION

NFPA 101	(1997) Life Safety Code

1.2 DESIGN

Lockers shall be constructed of solid phenolic. Design of lockers shall be by the Contractor using requirements specified herein as a minimum of acceptability. Each single or double tier locker shall be a complete unit capable of relocation without modifying or adding components, except for anchors and scribes. Common sides or backs between adjacent units are not permissible. The dimensions specified are for the purpose of establishing general layout. Minor variations necessary to coordinate the details of construction will be permitted. Details not shown or otherwise specified shall be logical and compatible with the details specified or shall be in accordance with alternate details approved for use. All parts shall be manufactured to standards that will permit replacement without modification of remaining parts. Materials not definitely specified shall be of a quality consistent with the quality required for other materials and suitable for the end use.

1.3 SUBMITTALS

Government approval is required for submittals with a "GA" designation; submittals having an "FIO" designation are for information only. The following shall be submitted in accordance with Section 01330 SUBMITTALS:

SD-04 Drawings

Locker Units; FIO.

Drawings shall show plans, elevations, sections, construction details, thicknesses of members, methods of fastening, and hardware details. Information as needed to fully describe the lockers and their installation into the work, and specifications for the required finish shall be included.

SD-09 Reports

Static Load Tests; FIO.

Test results indicating conformance to manufacturer's static load tests.

SD-14 Samples

Locker Units; FIO. Finishes; FIO.

One each of complete double tier and single tier locker units. The sample units may be incorporated into the finished locker installation, provided the units are identified and their location noted. Family Locker Room lockers shall have single tier lockers only.

1.4 DELIVERY AND STORAGE

Steel lockers shall be delivered set-up and ready to use. Lockers shall be delivered to the site in undamaged condition, stored in fully covered areas, and protected from damage.

PART 2 PRODUCTS

2.1 HARDWARE

2.1.1 Hinges

Hinges shall be stainless steel, not less than 1.61mm (0.062) inch thick, 5 knuckle, tamper-proof type, joint length not less than 63.5 mm (2-1/2 inches). When doors are closed, only a smooth beveled and rounded joint shall be exposed. Doors shall have minimum of two (2) hinges.

2.1.2 Hasp System for Padlocks

Hasp system for padlocking shall be as recommended by the manufacturer.

2.1.3 Clothes Hanging Hooks and Rods

Clothes hanging hooks and rods shall be chromium plated or zinc-coated steel.

2.2 LOCKER CONSTRUCTION

2.2.1 Workmanship

Lockers shall be accurately formed. Cut edges shall be straight and smooth. Holes for the reception of mechanical fasteners during final installation shall be accurately drilled and have all burrs removed. There shall be no sharp corners or protrusions of any kind in the final assembled lockers that could be considered harmful to the user or the stored items. Use of mechanical fasteners exposed to exterior of unit shall be limited to those required for application of hardware and scribes.

2.2.2 Treated Wood Base

Wood base shall be installed as indicated on the drawings.

2.2.3 Back, Side, Front, Top and Bottom Panels

Back, side, front, top and bottom panels shall each be formed from solid phenolic of 13 mm thick.

2.2.4 Doors

Doors shall be prepared for the reception of hardware.

2.2.5 Scribes and Closures

Scribes and closures shall be not lighter than 1 mm (20 gauge) flat steel.

2.2.6 Finishes

Finish shall be an approved manufacturer's standard finishes. Color shall match toilet partition color and will be selected from the manufacturer's list of standard colors.

2.3 FIRE PERFORMANCE

When tested in accordance with ASTM E 84, the solid phenolic panels shall have fire performance characteristics as specified for NFPA Class B interior finish.

2.4 STATIC LOAD TESTS

When tested in accordance with manufacturer’s static load tests, the door, including operation of hardware, shall not bind or otherwise fail and there shall be no failure, cracks, or permanent set exceeding 1.5875 mm (1/16 inch) in any component. Tests shall be performed with the locker in the normal upright position and anchored to simulate an actual installation, except back and sides shall be tested with the locker in the horizontal position with the test surface facing up.

PART 3 EXECUTION

3.1 INSTALLATION

Lockers shall be positioned in accordance with the layout shown, set level, and secured to base as indicated. Lockers with backs to walls shall be secured to the wall with not less than four fasteners, using one fastener near each corner. Free-standing or island-type installations shall be secured to the base anchorstrip with not less than three fasteners. In addition to securing to the floor or wall, lockers which are adjacent to each other, such as a back-to-back or a side-to-side layout, shall be secured to each other. Securing of adjacent lockers shall be with three fasteners located high, low, and intermediate when a side is involved. Securing of adjacent lockers shall be with four fasteners located near the corners when a back-to-back installation is involved. Fasteners to secure metal lockers in place shall penetrate two thicknesses of metal at each locker or shall be provided with washers. There shall be no sharp corners or protrusions in the final

assembled lockers that could be considered harmful to the user or stored items. Scribes over 355.6 mm (14 inches) wide shall be secured to the building construction with concealed fasteners at intervals not to exceed 304.8 mm (12 inches) on center. Hardware shall be adjusted and left in good working order. Doors shall not stick or bind, but shall operate smoothly and easily. Lockers shall be cleaned and protected from damage until acceptance.

END OF SECTION

SECTION 10520

FIRE EXTINGUISHER CABINETS AND ACCESSORIES

1. APPLICABLE PUBLICATIONS:

1.1 The following publication of the issues listed below, but referred to thereafter by basic designation only, form a part of this specification to the extent indicated by the reference thereto:

FEDERAL SPECIFICATION (FED. SPEC.)

DD-G-451C(4)	Glass, Plate, Sheet, Figured (Float, Flat, for Glazing, Corrugated, Mirrors and Other Uses)

2. SHOP DRAWINGS

2.1 Submit, for approval, shop drawings or catalog illustrations with descriptive data showing dimensions, construction, thickness of metal, glass and hardware.

3. GENERAL:

3.1 For number, type and location of recesses and cabinets, see drawings. Furnish and install complete and ready for use.

4. FIRE EXTINGUISHER CABINET AND RECESS:

4.1 Fire extinguisher cabinet shall be semi-recessed type with return trim and shall be manufacturer's standard size to accommodate a 9.46 Liter (2-1/2 gallon) pressurized water-type extinguisher. Fire extinguisher(s) not in contract.

5. MATERIALS:

5.1 Sheet Steel: Cold-rolled, annealed, stretcher leveled, bonderized or equivalent treatment and cleaned for the finish specified.

5.2 Glass: Glass shall meet all requirements of Fed. Spec. DD-G-451C, Type II, Class 1, wire glass, double strength, or Type I, Class 1, glazing quality, standard with cabinet manufacturer.

6. CONSTRUCTION:

6.1 Body shall be sheet steel not less than 1 mm (20 gage); one-piece full- welded with square corners, or seamless front full-welded to back and at corners. Welds shall be continuous in full depth and width dressed smooth on all exposed surfaces. Sides shall be cut, punched, or drilled as necessary to receive hardware.

6.2 Door shall be hollow construction sheet steel not less than 1 mm (20 gage). Rails and stiles of one-piece rolled section mitered and welded at corners, with attached glass retainers on inside, or of two-piece construction pressed from single sheets.

6.3 Cleaning: All welds shall be ground smooth. All irregularities in finished surface from welding, cutting, punching, or drilling shall be dressed smooth. All foreign matter shall be removed from finished cabinet prior to painting.

7. PAINTING:

7.1 After cleaning prime concealed and exposed metal surfaces with one coat of baked flat white enamel.

7.2 Exposed interior surfaces, in addition to the prime coat, shall receive not less than two coats of white baked enamel finish.

7.3 Exposed exterior surfaces, in addition to the prime coat, shall receive not less than two coats of red baked enamel finish.

8. HARDWARE:

8.1 Cabinets shall have hinges and catch.

8.2 Hinges shall be cabinet manufacturer's standard as to material type and finish, permitting door to open 100 degrees.

8.3 Catch shall be lever handle type, brass or bronze, bright chronium finish over nickel.

9. INSTALLATION:

9.1 Provide two anchors on each jamb, spaced not more than 609.6 mm (24 inches) apart and adjustable. Anchors shall be a minimum of 50,8 mm (2 inches) wide, extend 203.2 mm (8 inches) into masonry, 76.2 mm (3 inches) into concrete, belted to steel or wood framing.

END OF SECTION

SECTION 10800

TOILET ACCESSORIES

1 PART 1 - GENERAL

1.1 REFERENCES

The publications listed below form a part of this specification to the extent referenced. The publications are referred to in the text by basic designation only.

AMERICAN SOCIETY FOR TESTING AND MATERIALS (ASTM)

ASTM C 1036	(1991) Flat Glass

COMMERCIAL ITEM DESCRIPTIONS (CID)

CID A-A-2398	(Rev B) Curtain, Shower and Window (Metric - SI)

1.2 SUBMITTALS

Government approval is required for submittals with a "GA" designation, submittals having an "FIO" designation are for information only. The following shall be submitted in accordance with Section 01330 SUBMITTAL PROCEDURES:

SD-01 Data

Finishes; FIO. Accessory Items; FIO.

Manufacturer's descriptive data and catalog cuts indicating materials of construction, fasteners proposed for use for each type of wall construction, mounting instructions, and operation instructions.

SD-14 Samples

Finishes; FIO. Accessory Items; FIO.

One sample of each accessory proposed for use. Approved samples may be incorporated into the finished work, provided they are identified and their locations noted.

SD-19 Operation and Maintenance Manuals

Electric Hand Dryer; FIO.

Four complete copies of maintenance instructions listing routine maintenance procedures and possible breakdowns and repairs. Instructions shall include simplified wiring and control diagrams and other information necessary for unit maintenance.

1.3 DELIVERY, STORAGE, AND HANDLING

Toilet accessories shall be wrapped for shipment and storage, delivered to the job site in manufacturer's original packaging and stored in a clean, dry area protected from construction damage and vandalism.

2 PART 2 - PRODUCTS

2.1 MANUFACTURED UNITS

Toilet accessories shall be provided where indicated in accordance with Paragraph SCHEDULE. Porcelain type, tile-wall accessories are specified in Section 09310 CERAMIC TILE. Each accessory item shall be complete with the necessary mounting plates, shall be of sturdy construction with corrosion resistant surface.

2.1.1 Anchors and Fasteners

Anchors and fasteners shall be capable of developing a restraining force commensurate with the strength of the accessory to be mounted and shall be suited for use with the supporting construction. Exposed fasteners shall be of tamperproof design and shall be finished to match the accessory.

2.1.2 Finishes

Except where noted otherwise, finishes on metal shall be provided as follows:

Metal	Finish
Stainless steel	No. 4 satin finish
Carbon steel, copper alloy, and brass	Chromium plated, bright

2.2 ACCESSORY ITEMS

Accessory items shall conform to the requirements specified below.

2.2.1 Grab Bar (GB)

Grab bar shall be 1-1/4 inch OD Type 304 stainless steel. Grab bar shall be form and length as indicated. Concealed mounting flange shall have set screw mounting holes concealed on the lip of the flange. Grab bar shall have peened non-slip surface. Installed bars shall be capable of withstanding a 226 kg (500 pound) vertical load without coming loose from the fastenings and without obvious permanent deformation. Space between wall and grab bar shall be 38mm(1-1/2 inches).

2.2.2 Framed Glass Mirrors (~~FBM~~ FGB)

Glass for mirrors shall be Type I transparent flat type, Class 1-clear. Glazing Quality q1 6 mm thick conforming to ASTM C 1036. Glass color shall be clear. Glass shall be coated on one surface with silver coating, copper protective coating, and mirror backing paint. Silver coating shall be highly adhesive pure silver coating of a thickness which shall provide reflectivity of 83 percent or more of incident light when viewed through 6mm(1/4 inch) thick glass, and shall be free of pinholes or other

defects. Copper protective coating shall be pure bright reflective copper, homogeneous without sludge, pinholes or other defects, and shall be of proper thickness to prevent "adhesion pull" by mirror backing paint. Mirror backing paint shall consist of two coats of special scratch and abrasion-resistant paint and shall be baked in uniform thickness to provide a protection for silver and copper coatings which will permit normal cutting and edge fabrication. Frames for plate glass mirrors shall be fabricated from corrosion-resisting steel with satin finish. Frames shall be provided with concealed fittings and tamperproof mountings.

2.2.3 Combination Seat Cover Dispenser/Toilet Tissue Dispenser (SCTT)

Unit shall be surface mounted, dispensing two rolls of tissue stacked vertically and seat covers. Seat cover dispenser shall have a minimum capacity of 500 seat covers. Cabinet shall be stainless steel, satin finish.

2.2.4 Combination Seat Cover Dispenser/Napkin Disposer/Toilet Tissue Dispenser (SCSNTT)

Unit shall be partition mounted, dispensing two rolls of tissue stacked vertically and seat covers each side. Seat cover dispenser shall have a minimum capacity of 500 seat covers. Disposer shall be provided with a door for inserting disposed napkins each side. Disposer shall be constructed of Type 304 stainless steel with removable leak-proof receptacle for disposable liners. Receptacle shall be retained in cabinet by tumbler lock. Cabinet shall be stainless steel, satin finish. Fifty disposable liners of the type standard with the manufacturer shall be provided.

2.2.5 Combination Paper Towel Dispenser/Waste Receptacle Units (PTDWR)

Dispenser/receptacle shall be recessed and shall have a capacity of 600 sheets of C-fold, single-fold, or quarter-fold towel. Waste receptacle shall be designed to be locked in unit and removable for service. Locking mechanism shall be tumbler key lock. Waste receptacle shall have a capacity of 12 gallons. Unit shall be fabricated of not less than 0.75mm(1/32 inch) stainless steel welded construction with all exposed surfaces having a satin finish. Waste receptacle that accepts reusable liner standard for unit manufacturer shall be provided.

2.2.6 Soap Dispenser (SD-2)

Soap dispenser shall be counter mounted, liquid type consisting of a polyethylene tank with a minimum 1 quart holding capacity and a 152mm(6 inch) spout length

2.2.7 Towel Pin (TP)

Towel pin shall have concealed wall fastenings, and a pin integral with or permanently fastened to wall flange. Maximum projection shall be 100mm (4inches). Design shall be consistent with design of other accessory items.

2.2.8 Electrical Hand Dryer (EHD

Dryer shall be activated by means of an electrostatic proximity switch, automatically detecting hands when present, and shall shut off automatically. Unit shall include a surface-mounted stainless steel housing.

3 PART 3 - EXECUTION

3.1 INSTALLATION

Toilet accessories shall be securely fastened to the supporting construction in accordance with the manufacturer's approved instructions. Accessories shall be protected from damage from the time of installation until acceptance.

3.2 SCHEDULE

Accessories Required

Room or Space	GB	PTDWR	SCTT	SCSNTT	TP	SD	FGM	EHD
111	2	1	1	1	2	1	1	
116	4	1		1	10	2	4	3
117	2	1	1		4	2	3	3
122	2	1	3				2	1
123	2	1		3			2	1

END OF SECTION

SECTION 11480

ATHLETIC EQUIPMENT

PART I GENERAL

1.1 REFERENCES

The publications listed below form a part of this specification to the extent referenced. The publications are referred to in the text by basic designation only.

AMERICAN COLLEGE OF SPORTS MEDICINE

Health/Fitness Facility Standard and Guidelines (Second Edition)

1.2 GENERAL REQUIREMENTS

Equipment shall consist of backboards, rims and padding, ceiling suspended backstops, gymnasium divider and volleyball support systems. Equipment shall be of single source manufacturer, and shall conform to the Health/Fitness Facility Standards by American College of Sports Medicine.

1.3 SUBMITTALS

Government approval is required for submittals with a "GA" designaton; submittals having an "FIO" designation are for information only. The following shall be submitted in accordance with Section 01330 SUBMITTAL PROCEDURES:

SD-01 Data

Athletic Equipment; FIO.

Manufacturer's descriptive and technical literature, catalog cuts, and installation instructions.

SD-19 Operation and Maintenance Manuals

Gymnasium Divider; FIO; Back Stops; FIO.

Six complete copies of the service manual, not later than 3 months prior to the date of beneficial occupancy.

Operation manual shall outline the step-by-step procedures for equipment installation, startup, basic operation features, and operation shutdown. Maintenance manual shall list routine maintenance procedures, possible breakdowns, repairs, and troubleshooting guides.

1.4 DELIVERY AND STORAGE

1.4.1 Delivery

Items shall be delivered to the site in original manufacturer's packaging in undamaged condition.

1.4.2 Storage

Items delivered and placed into storage shall be stored in fully covered areas with protection from dage, weather, humidity, and temperature variation, dirt and dust.

1.4.3 Damaged Equipment

Contractor shall repair or replace damaged equipment to the Contracting Officer's satisfaction.

1.5 WARRANTY

Manufacturer's standard performance guarantees or warranties that extend beyond a one-year period shall be provided.

PART 2 PRODUCTS

2.1 BACKBOARDS AND RIMS

Backboards shall be rectangular all glass construction with 20 year warranty. Rims shall be of breakaway type with nets.

2.2 BACKSTOPS

Backstops shall be wall-suspended, fold up, motorized with remote control. Backstops and backboards shall operate on 120Vac. Units shall be supplied and installed as a complete system including all power supply connections.

2.3 GYMNASIUM DIVIDER

Gymnasium divider curtain shall be motorized folding type and consist of 504 grams (18 ounces) solid vinyl coated polyester lower section and 252 grams per square meter (9 ounces per square yard) vinyl coated polyester mesh. Color shall be standard manufacture’s selection: dark blue for vinyl, white for mesh.

2.4 VOLLEYBALL

2.4.1 Volleyball Uprights

Made of extruded steel, 76 mm (3”) diameter, weighing 25 kg (55 pounds). The upright stores and sets up in one single piece; being 2080 mm (6’ 10”) long when internal telescoping section is collapsed. The bottom of the upright holds a floor protective molded hard rubber insert. The net tightening device is mounted on the upright on the side away from court play and is a totally enclosed, non-slip, worm-gear unit.

2.4.2 Floor-plate/Sleeve

Brass floor-plates with hinged access cover. Plates are 165 mm (6½ “) in diameter. Steel sleeves are 221 mm (9”) long. In a wood floor, the floor-plate is fastened to the floor only to allow it to float with the expansion and contraction of the floor.

2.4.3 Upright Volleyball Pad

Pads are 25 mm (1”) molded-foamed beaded polyethylene, coated with vinyl chloride puncture resistant non-run covering. They measure 1725 mm (5’ 8”) in height and totally enclose the upright. Pads attach in section with permanently affixed vinyl straps. Color in blue and black.

2.5 PADDING

2.5.1 Material

600 mm urethane filler with 397 gram (14 ounce) non-tear vinyl laminated material. Vinyl material shall have a rip resistant quality utilizing industrial polyester filament yarns. It shall be mildew and rot resistant. Cover shall be flame retardant.

2.5.2 Wall Padding

Wall padding panels shall be of the same materials as athletic equipment padding, 600 mm x 1780 mm for use with aluminum clip mount brackets. Wall padding panels shall be cemented to 10 mm thick, high-density oriented strand backing board.

2.6 VOLLEYBALL FLOOR SLEEVES

The floor sleeve cover plate shall be chrome plated steel with attached hinged cover. Hinged cover when closed shall allow for a completely flat surface. The connection of the cover plate to the resilient floor shall allow it to move with the expansion and contraction of the floor. Cover plates shall be 171 mm (2-3/4 inch) in diameter by 6 mm (1/4 inch) thick. Diameter of opening shall be 108 mm (4-1/4 inch). Steel sleeve shall be 231 mm (9-3/32-inch) long. Inside diameter of sleeve shall be 78 mm (3-1/16-inch).

2.7 UPRIGHT SAFETY PADS

Pad shall be one single piece (center pole pad two pieces) 1677 mm (66 inches) in height. Padding shall consist of 25 mm (1 inch) shock absorbing prime, cross-link polyethylene foam, covered with 392 grams (14 ounce) vinyl, color shall be dark blue. Attachment to uprights shall be effected on single piece by four 51 mm (2 inch) male/female Velcro tabs, and by eight 51 mm (2 inch) male/female Velcro tabs on center pole pad.

2.8 VOLLEYBALL NET

The net shall be 9.75 meters (32 feet) in length and 0.91 meters (36 inch) maximum in width. Netting shall be No. 36 black nylon woven in 101 mm (4-inch) square mesh. Borders shall be of 392 grams (14 ounce) white vinyl with 19 mm (3/4 inch) diameter fiberglass dowels at each end to insure proper net tension. Top tension cable shall be 5 mm (3/16-inch) diameter steel cable. Bottom tension rope shall be 6 mm (1/4 inch) nylon. Each net shall include a net tension kit and a rope tightener package.

2.9 SCOREBOARDS

Scoreboard, control console and cables shall conform to UL Standards and shall be supplied and installed as a complete system including power connections. Scoreboards shall display all necessary information and captions for basketball, volleyball and wrestling. Scoreboards shall be remotely

controlled by a solid state, microprocessor based console with the ability to control two scoreboards simultaneously or each one individually. Console and scoreboard shall operate on 120Vac.

PART 3 EXECUTION

3.1 ASSEMBLY AND INSTALLATION

Athletic equipment shall be assembled and installed in strict accordance with manufacturer's written instructions at locations shown. The Contractor shall make all electrical connections necessary for proper operation.

END OF SECTION

SECTION 12320

CABINETS AND COUNTERTOPS

PART 1 GENERAL

1.1 REFERENCES

The publications listed below form a part of this specification to the extent referenced. The publications are referred to in the text by basic designation only.

AMERICAN SOCIETY FOR TESTING AND MATERIALS (ASTM)

ASTM D 570	(1995) Water Absorption of Plastics
ASTM D 638	(1997) Tensile Properties of Plastics
ASTM D 2583	(1995) Indentation Hardness of Rigid Plastics by Means of a Barcol Impressor
ASTM E 84	(1996a) Surface Burning Characteristics of Building Materials

BUILDERS HARDWARE MANUFACTURERS ASSOCIATION (BHMA)

BHMA ANSI/BHMA A156.9	(1994) Cabinet Hardware

KITCHEN CABINET MANUFACTURERS ASSOCIATION (KCMA)

KCMA ANSI/KCMA A161.1	(1995) Recommended Performance & Construction Standards for Kitchen and Vanity Cabinets

NATIONAL ELECTRICAL MANUFACTURERS ASSOCIATION (NEMA)

NEMA LD 3	(1995) High-Pressure Decorative Laminates

1.2 DESIGN

Cabinets shall be wood, factory-fabricated and finished in the manufacturer's standard sizes and finishes of the type, design, and configuration indicated. Cabinets shall be constructed as specified and shall meet the requirements of KCMA ANSI/KCMA A161.1. Wall and base cabinet assemblies shall consist of individual units joined into continuous sections. Fastenings shall be accomplished to permit removal and replacement of individual units without affecting the remainder of the installation. Counters shall be provided with watertight sink rim when indicated. Drawers shall be removable and shall be equipped with position stops to avoid accidental complete withdrawals. Shelves shall be fixed or adjustable as indicated.

1.3 SUBMITTALS

Government approval is required for submittals with a "GA" designation; submittals having an "FIO" designation are for information only. The following shall be submitted in accordance with Section 01330 SUBMITTAL PROCEDURES:

SD-01 Data

Cabinets and Countertops; FIO.

Manufacturer's printed data, catalog cuts, installation and cleaning instructions.

SD-04 Drawings

Cabinets and Countertops; GA.

Drawings showing each type of cabinet and related item, and clearly indicating the complete plan, location, and elevations of the cabinets and accessories and pertinent details of construction, fabrication, and attachments.

SD-09 Reports

Cabinets and Countertops; GA.

Test reports certifying that all cabinets comply with the requirements of KCMA ANSI/KCMA A161.1. Tests shall be conducted by independent laboratories approved by KCMA. KCMA certification seals affixed to the cabinets will be accepted in lieu of certified test reports.

SD-14 Samples

Cabinets and Countertops; GA.

In lieu of individual samples, complete minimum size cabinets may be furnished as samples. Mock-up units are not acceptable. Samples shall be of sufficient size to show color, pattern, and method of assembly.

a. Countertop and backsplash - One section, containing both.

b. Door and drawer front - One of each, with hardware mounted.

c. Countertop color samples approximately 50 x 75 mm size.

d. Stain/color samples approximately 50 x 75 mm size.

1.4 DELIVERY AND STORAGE

Cabinets shall be delivered to the jobsite wrapped in a protective covering. Cabinets shall be stored in accordance with manufacturer's recommendations in an adequately ventilated, dry location that is free of dust, water, or other contaminants and in a manner to permit access for inspection and handling.

Cabinets shall be handled carefully to prevent damage to the surfaces. Damaged items that cannot be restored to like-new condition shall be replaced.

PART 2 PRODUCTS

2.1 CABINETS

Wall and base cabinets shall be of the same construction and same outside appearance. Door design shall be [[solid flush face] [framed inset hardwood panels] [glass face]] from vendors standard styles. Corner cabinets shall be equipped with [[notched shelving] [full circle shelves]] as indicated. Shelves shall be fixed or fully adjustable as indicated. Adjustable shelves shall be capable of adjusting on approximately 75 mm increments. Shelves shall be supported by self-locking clips or wood dowels. Dowels shall be approximately 8 mm in diameter by40 mm long. Dowels shall be inserted into borings for the shelf adjustments. Shelves shall be minimum 13 mm thick plywood or minimum 13 mm thick 20 kg density particle board. Drawer fronts shall be 20 kg density particle board or hardwood plywood to match cabinet door construction.

2.1.1 Frame Type Cabinets

The cabinets shall be constructed with frame fronts and solid ends, or frame construction throughout. Frame members shall be 19 mm thick by 38 mm wide; kiln-dried hardwood, glued together, and shall be either mortised and tenoned, dovetailed or doweled, nailed, stapled or screwed. Top and bottom corners shall be braced with either hardwood blocks that are glued together with water resistant glue and nailed in place, or metal or plastic corner braces. Backs of wall cabinets shall be 3 mm thick plywood, tempered hardboard or 9 mm thick, 20 kg density particle board. Backs of base and tall cabinets shall be 9 mm thick hardwood or 9 mm thick, 20 kg density particle board. Bottoms of cabinets shall be minimum 9 mm thick plywood 20 kg density particle board or [good grade] [sound grade] plywood and shall be braced with wood members glued in place. Cabinet ends shall be [16 mm thick hardwood plywood] [16 mm thick, 20 kg density particle board core] [9 mm thick, 20 kg density particle board].

2.2.1 High-Pressure Laminated Plastic Clad Countertops

Clad countertop and backsplash shall be constructed of 19 mm thick, 20 kg density particle board core and shall be fully formed type. Fully formed type or square edge shall be a unit with shaped edges using wood nose molding at counter edge and shall include a separate backsplash. Backsplash shall be not less than 90 mm high.] Edging and trim shall consist of plastic laminate cut and fitted to all exposed edges. End splashes constructed of 19 mm plywood or 19 mm thick, 20 kg density particle board core shall be supplied. Continuous sheets of longest lengths practicable shall be provided. Joints in surface sheeting shall be tight and flush and held to a practicable minimum. When the countertop and backsplash are two separate units, GP50 plastic laminate shall be used. When the countertop and backsplash are one unit, PF42 plastic laminate shall be used. Plastic laminate shall conform to the requirements of NEMA LD 3 and plastic laminate adhesive shall be contact type applied to both surfaces. For fully formed type countertops, the post-forming plastic laminate shall not be bent to a radius smaller than the limit recommended by the plastic manufacturer.

2.3 SINK/LAVATORY RIMS

Sink/lavatory rims shall be of the corrosion resistant steel clamping type, sized to the sink and a standard product of a manufacturer regularly producing this type of equipment.

2.4 FINISH

2.4.1 Cabinet Finish

Cabinets shall be provided with a factory-applied durable finish in accordance with KCMA ANSI/KCMA A161.1 requirements and of a type standard with the manufacturer. Exposed exterior surfaces shall be melamine plastic finish

2.4.2 Melamine Laminated Interior Cabinet Finish

Plywood, particle board or tempered hardboard cabinet backs shall be finished with a melamine laminate on the exposed side. Particle board shelves shall be covered on both sides with a laminated melamine finish. Melamine laminate shall conform to the requirements of NEMA LD 3 and laminate adhesive shall be contact type applied to both surfaces.

2.4.3 Backer Sheets

Backer Sheets of high pressure plastic laminate, shall conform to NEMA LD 3, Grade BK20 and shall be applied to the underside of all core material.

2.5 HARDWARE

Hardware shall conform to BHMA ANSI/BHMA A156.9, shall be suitable for kitchen cabinet use, and shall include all miscellaneous hardware for a complete installation. Door hinges shall be self-closing type. Drawer runners shall have nylon rollers standard with the manufacturer. Hardware and fastenings for doors and drawers with particle board cores shall be of the through-bolt type. The types and finishes of hardware shall be as follows:

	BHMA DESIGNATION	
TYPE	NUMBER	FINISH
Hinge	B01602	645
Door pull	B02011	625

2.6 COLOR, TEXTURE, AND PATTERN

Design, color, and finish shall be as indicated.

PART 3 EXECUTION

3.1 INSTALLATION

Cabinets shall be installed level, plumb, and true to line, and shall be attached to the walls or floors with suitable devices to securely anchor each unit. Countertops, accessories, and hardware shall be installed as indicated. Installation shall be in accordance with the manufacturer's approved printed instructions. The inner edge of sink cut-outs in laminated plastic tops shall be painted with a coat of semigloss enamel paint and sink flanges shall be set in a bed of sealant. Closer and filler strips and finish moldings shall

be provided as required. Prior to final acceptance, doors shall be aligned, and hardware shall be adjusted.

3.2 CLEANING

Cabinet and countertop surfaces shall be cleaned in accordance with manufacturer's instructions.

END OF SECTION

This page intentionally blank

SECTION 12660

ELECTRICALLY OPERATED TELESCOPING STANDS

PART 1 GENERAL

1.1 GENERAL REQUIREMENTS

Seating shall have the following features:

a. Fully encapsulated closed deck

b. Aluminum nose beam for maximum rigidity

c. Telescopic seating sloped at front and contoured at rear for full leg movement and maximum foot room.

1.2 DELIVERY AND STORAGE

Telescopic seating shall be delivered, unloaded inside gymnasium and completely installed in accordance with manufacturer's instructions and approved submittal drawings.

1.3 WARRANTY

Manufacturer's standard performance guarantees or warranties that extend beyond a 1-year period shall be provided.

PART 2 PRODUCTS

2.1 TELESCOPIC SEATING

Each individual telescoping seating module shall be high impact, structural foam, polyethylene, with perimeter structural interlock to engage modules progressively in each row. Mounting hardware will be concealed. Each end of each seating row will be enclosed. Each seat will be a full 254 mm in depth and contoured front to back for comfort. (Side to side contours are not permitted.) Each seat will have a waterfall front face for full leg movement and a curved rear face for ease of cleaning. Standard color shall be used. A 2-color scheme is to be selected, a different color for each team. Top and front surface and end caps will have a textured finish.

2.1.1 Each row shall open and close with respect to adjacent rows using a telescopic action employing free floating frames on a "slant post" understructure.

2.1.2 Each tiered row shall be fully enclosed at the footrest level with footrest panels encapsulated by structural beams at both the front and rear of the row.

2.1.3 Footrest

2.1.3.1 Footrest panels shall be continuous across joints in the encapsulating beams, so as to create a continuous horizontal truss along the complete row length.

2.1.3.2 Footrest level aisles shall be used to minimize obstruction to cleaning and crowd traffic. Seat-rest level aisles are not acceptable.

2.1.3.3 The footrest walking surface shall be smooth and free of any exposed hardware.

2.1.4 Nose Beam

The rigid aluminum front structural beam (nose beam) shall include a continuous lateral mounting slot to facilitate module installation and to provide flexible aisle locations. The nose beam shall provide continuous beam support for footrest level aisles, such that aisles exist without miscellaneous reinforcing components wherever seating elements are omitted.

2.1.5 Deck

Deck construction shall consist of a full platform, plywood closed deck. Plywood is to be not less than 15 mm nominal AC grade with solid cross band. The finish shall be modified urethane paint in a color complementary to the seating surface. All joints shall include aluminum “H” splice beam connectors.

2.1.6 Understructure

2.1.6.1 Understructure main support columns shall be fully enclosed, rectangular structural steel tubing for maximum torsional rigidity.

2.1.6.2 Each support column shall have a minimum of four soft rubber faced wheels with sintered iron bearings to assure ease of operation on hard or soft floors.

2.2 POWER OPERATION (NON-FRICTION TYPE)

Gymnasium seating shall be power operated, non-friction type. Limit switches shall regulate the extended and closed positions. Movement shall be reversible from any position. The power units shall be capable of locking the units in any desired position. The power supply shall be 208-220 volts, 3 phase, 60 cycle. A junction box, located per the manufacturer’s instructions, must be provided for each bank of power. The Contractor shall furnish and install conduit and wiring. Motor starter, safety switch, limit switches, and key control switch shall be provided. Rigid pusher linkages shall maintain alignment of the bank during operation. The linkages shall be attached to drive reels placed at pre-determined locations at the rear of the bank. Power systems employing friction on the floor are unacceptable.

2.3 DESIGN

2.3.1 Telescopic seating shall be designed to support:

a. 500 kg/m^2 (100 pounds per square foot) live load.

b. 178 kg/m (120 pounds per lineal foot) live load for seatboards and footrests.

c. 36 kg/m (24 pounds per lineal foot) sway force parallel to seats.

d. 15 kg/m (10 pounds per lineal foot) sway force perpendicular to seats.

2.3.2 Telescopic seating shall have a minimum seat height of 443 mm from seat to platform deck.

2.3.3 Rise per row shall be 267 mm.

2.3.4 Row spacing shall be 609 mm.

2.3.5 The structural steel beam at the rear of the footrest shall be recessed a minimum of 50 mm behind the front edge of the seatboard.

2.4 EQUIPMENT REQUIREMENTS

Furnish gymnasium seating as shown on architectural plans and described below:

No. of Banks	**Length of Banks**
3 each side	7800 mm
No. of Rows	**Rise per Row**
6 each side	267 mm
Operation (check)	**Spacing (Circle)**
Power	609 mm

2.5 ACCESSORIES

2.5.1 Self-Storing End Rails

Provide self-storing end rails at all exposed ends of seating banks. Rails are 1067 mm (42 inches) high with vertical intermediate rails at 100 mm (4 inch) intervals, and are constructed of 18-gauge power coated square steel tubing.

2.5.2 End Rails (Removable)

Provide removable painted steel end rails at all exposed ends of seating banks. Rails are 1067 mm (42 inches) high, with intermediate rails at 100 mm (4 inch) intervals. Rails can be stored in deck area of bleacher when not in use.

2.5.3 End Panels

Provide end panels at all exposed ends of seating banks.

2.5.4 Timer Tables

Provide two 2400 mm x 380 mm timers tables. Top shall be pressure laminated plastic over 20 mm high density particle-board. Table to include folding tubular steel legs that fit into mounting sockets for score keeper seating on the 2nd row, and stored in deck area when not in use.

PART 3 EXECUTION

3.1 INSTALLATION

Install telescopic seating in accordance with manufacturer's instructions and approved submittal drawings.

END OF SECTION

SECTION 12675

FLOOR MAT AND FRAME

PART 1 GENERAL

1.1 REFERENCES

The publications listed below form a part of this specification to the extent referenced. The publications are referred to in the text by the basic designation only.

AMERICAN SOCIETY FOR TESTING AND MATERIALS (ASTM)

ASTM B 221	(1990) Aluminum and Aluminum-Alloy Extruded Bar, Rod, Wire, Shape, and Tube

1.2 GENERAL

The mat recesses shall be protected by a plywood filler during construction. The link mat shall be installed when there is no longer danger of damage from construction operations.

1.3 SUBMITTALS

Government approval is required for submittals with a "GA" designation; submittals having an "FIO" designation are for information only. The following shall be submitted in accordance with Section 01330 SUBMITTAL PROCEDURES:

Samples

Mat; FIO.

PART 2 PRODUCTS

2.1 FRAME

Frame shall be fabricated of aluminum extrusion conforming to ASTM B 221, alloy 6063, temper T5. The frame shall be furnished complete with concrete anchors, corner splices, etc., as required for recessed installation. The frame shall be of the universal type to accept the mat on one side and to accept a variety of floor finishes on the other side, and to provide a controlled recess depth for a flush, continuous walking surface.

2.2 MAT

Mat surface shall be carpet inserts having fusion bonded cut pile. Inserts shall be locked into treadrails. Treadrails shall be fabricated from 6063-T5 aluminum alloy and joined in a continuous hinge system to allow easy roll-up. Colors shall be as follows:

- Treadrail, standard clear anodized.

- Carpet insert as indicated on the drawings.

PART 3 EXECUTION

3.1 INSTALLATION

Frame shall be installed square and true to line to accommodate the mat. Frame shall be oriented to accommodate the required floor finish adjacent to the mat.

END OF SECTION

SECTION 13052

SAUNAS

PART I GENERAL

1. 1 REFERENCES

The publications listed below form a part of this specification to the extent referenced. The publications are referred to in the text by basic designation only.

AMERICAN SOCIETY FOR MECHANICAL ENGINEERS (ASME)

ASME BPV I	(1995; Addenda Dec 1995) Boiler and Pressure Vessel Code; Section I, Power Boilers
ASME BPV IV	(1995; Addenda Dec 1995) Boiler and Pressure Vessel Code; Section IV, Heating Boilers
ASME BPV VIII Div 1	(1995; Addenda Dec 1995) Boiler and Pressure Vessel Code; Section VIII, Pressure Vessels Division 1 - Basic Coverage
ASME BPV IX	(1995; Addenda Dec 1995) Boiler and Pressure Vessel Code; Section IX, Welding and Brazing Qualifications

U.S. DEPARTMENT OF COMMERCE, NATIONAL INSTITUTE OF STANDARDS AND TECHNOLOGY (DOC)

DOC PS 20	(1994) American Softwood Lumber Standard

WEST COAST LUMBER INSPECTION BUREAU (WCLIB)

WCLIB	(1993) Standard Grading Rules for West Coast Lumber, No. 17

WESTERN WOOD PRODUCTS ASSOCIATION (WWPA)

WWPA	(1988 with July Supplement) Western Lumber Grading Rules

1.2 SUBMITTALS

Government approval is required for submittals with a "GA" designation; submittals having an "FIO" designation are for information only. The following shall be submitted in accordance with Section 01330 SUBMITTAL PROCEDURES:

SD-01 Data

Product Data; GA.

For each type of sauna indicated. Include details of construction relative to materials, dimensions of individual components, profiles, finishes, rated capacities, and accessories.

Maintenance Data; FIO.

For sauna heaters and finishes to include in the maintenance manuals specified in Division 1.

SD-04 Drawings

Shop Drawings; GA.

Show details of fabrication and installation of saunas. Include plans, elevations, wall and ceiling sections, installation details, and attachments to other work. Indicate finishes, materials, and joinery methods.

a. Wiring Diagrams: Details of wiring for sauna heaters and lighting systems. Include rated capacity of heaters. Differentiate between manufacturer-instal led and field-installed wiring.

SD-14 Samples

Wood; GA.

Samples: Not less than 75 mm (3 inches) square, of each exposed wood finish including walls, ceilings, floors, and benches.

1.3 QUALITY ASSURANCE

1.3.1 Manufacturer Qualifications

Engage a firm experienced in manufacturing saunas similar to those indicated for this project and with a record of successful in-service performance.

1.3.2 Source Limitations

Obtain sauna components through one source from a single manufacturer.

1.3.3 Listing and Labeling

Provide electrical components specified in this Section that are listed and labeled.

a. The Terms "Listed" and "Labeled": As defined in the National Electrical Code, Article 100.

b. Listing and Labeling Agency Qualifications: A "Nationally Recognized Testing Laboratory" (NRTL) as defined in OSHA Regulation 1910.7.

1.4 DELIVERY, STORAGE, AND HANDLING

a. Comply with manufacturer's written instructions for minimum and maximum temperature requirements for storage.

b. Handle and store materials and equipment in a manner to avoid significant or permanent deflection of wood components.

c. Deliver materials to project site in original packages with seals unbroken and- bearing manufacturer's labels containing brand name and type of material, date of manufacture, and directions for storage.

d. Store materials in their original, undamaged packages and containers, inside a well ventilated area protected from weather, moisture, soiling, extreme temperatures, and humidity. Lay flat, blocked off the ground.

1.5 PROJECT CONDITIONS

1.5.1 Field Measurements

Verify sauna location by field measurements before fabrication and indicate measurements on shop drawings. Coordinate fabrication schedule with construction progress to avoid delaying the Work.

a. Established Dimensions: Where field measurements cannot be made without delaying the Work, establish opening dimensions and proceed with fabricating sauna components without field measurements. Coordinate wall, floor, and ceiling construction to ensure actual opening dimensions correspond to established dimensions.

PART 2 PRODUCTS

2.1 MATERIALS

2. 1.1 Custom-Cut, or Precut, Sauna Components

Manufactures standard precut spaced board for floor, benches and back rails.

2.1.2 Wood Standards

Comply with DOC PS 20, "American Softwood Lumber * Standard," for wood with applicable grading rules of inspection agencies certified by the American Lumber Standards Committee's (ALSC) Board of Review.

a. Inspection Agencies: Inspection agencies, and the abbreviations used to reference them, with lumber species and grades include the following:

(1) WCLEB - West Coast Lumber Inspection Bureau.

(2) WWPA - Western Wood Products Association.

2.1.3 Interior Finish

Spaced boards, sanded smooth, kiln-dried to no more than 12 percent moisture content.

a. Wood Species and Grade: Western red cedar; WCLIB or WWPA. B and Better, I and 2 Clear VG (Vertical Grain).

2.1.4 Benches

Removable spaced boards sanded smooth with eased edges of same species as interior finish, with components screwed and glued together from bottom side with corrosion-resistant fasteners.

2.1.5 Door

Storefront door with wooden push-pull handles.

a. Door Construction: Aluminum/glass.

2.1.6 Sauna Heater

Manufacturer's standard electric unit with capacity of 16 KW, 208V 3 phase; heater shall feature wall mounting capability. Unit shall be mounted on a wall as recommended by the manufacturer. Exact location to be approved by the Contracting Officer. Heater shall be operated from a separate control panel. Heater shall feature stainless steel heating elements, cast-iron top, thermostat, and a high-temperature cut-off switch." ~~Manufacturer's standard electric unit with capacity as indicated; heater shall feature auto water fill and auto low water cutoff. Steam generator shall be manufactured to comply with Section I of ASME BPV Code; heater shall also be UL Listed. Heater shall be provided with manufacturer recommended pressure controller and gauge; sight glass; and check and drain valves.~~

2.1.7 Controls

Manufacturer's standard system and signal equipment, including adjustable sauna-room temperature control, ON-OFF switch, light switch, and heat-indicator light. Temperature control panel shall be located at the front counter in the Lobby; occupants of the sauna shall not have access to the adjustable temperature control. Contractor shall be responsible for customizing the sauna controls as specified.

a. ~~solenoid isolation valve for steam release shall respond to either of two temperature sensors located in the sauna rooms.~~

b. ~~temperature control panel shall be located at the front counter in the Lobby; occupants of the sauna shall not have access to the adjustable temperature control. Contractor shall be responsible for customizing the sauna controls as specified.~~

2.2 ACCESSORIES

a. Combination Thermometer/Hygrometer: Provide chrome plated unit with glass face, 127 mm (5 inch) diameter, Mounton sauna interior, near light fixture for best visibility.

b. Acrylic safety-feature sign.

c. Provide one wood-slat backrest for each bench.

d. Provide a 4-peg, wooden towel rack.

e. Auto drain or blow down

f. Pipes leading to the two sauna rooms shall be copper; sizing and routing shall be determined by Contractor and approved by the heater manufacturer. Pipes shall be insulated with a minimum thickness as specified in Section 15080.

PART 3 EXECUTION

3.1 EXAMINATION

a. Examine substrates, areas, and conditions, with Installer present, for compliance with requirements for installation tolerances and other conditions affecting performance of saunas.

(1) Do not proceed with installation until unsatisfactory conditions have been corrected.

b. Examine Toughing-in for electrical systems to verify actual locations of electrical connections before installation.

3.2 INSTALLATION

Install saunas level and plumb, according to manufacturer's written instructions and roughing-in drawings.

3.3 DEMONSTRATION

3.3.1 Startup Services

Engage a factory-authorized service representative to provide startup services and to demonstrate and train Owner's maintenance personnel as specified below.

a. Test and adjust controls and safeties. Replace damaged and malfunctioning controls and equipment.

b. Train Owner's maintenance personnel on procedures and schedules related to startup and shutdown, troubleshooting, servicing, and preventive maintenance.

c. Review data in the operation and maintenance manuals. Refer to Section 1701 OPERATION AND MAINTENANCE MANUALS.

c Schedule training with Owner, through Architect, with at least 7 days'advance notice.

3.4 PROTECTION

Secure installed saunas to ensure that they will not be used before Substantial Completion.

END OF SECTION

SECTION 13080

SEISMIC PROTECTION FOR MECHANICAL AND ELECTRICAL MISCELLANEOUS EQUIPMENT

PART 1 GENERAL

1.1 REFERENCES

The publications listed below form a part of this specification to the extent referenced. The publications are referred to in the text by basic designation only.

AMERICAN SOCIETY FOR TESTING AND MATERIALS (ASTM)

ASTM A 36/A 36M	(1997a) Carbon Structural Steel
ASTM A 53	(1997) Pipe, Steel, Black and Hot-Dipped, Zinc-Coated, Welded and Seamless
ASTM A 153/A 153M	(1998) Zinc Coating (Hot-Dip) on Iron and Steel Hardware
ASTM A 307	(1994) Carbon Steel Bolts and Studs, 60,000 PSI Tensile Strength
ASTM A 325	(1997) Structural Bolts, Steel, Heat Treated, 120/105 ksi Minimum Tensile Strength
ASTM A 325M	(1993) High-Strength Bolts for Structural Steel Joints (Metric)
ASTM A 500	(1996) Cold-Formed Welded and Seamless Carbon Steel Structural Tubing in Rounds and Shapes
ASTM A 563	(1996) Carbon and Alloy Steel Nuts
ASTM A 572/A 572M	(1997) High-Strength Low-Alloy Columbium-Vanadium Structural Steel
ASTM A 603	(1994) Zinc-Coated Steel Structural Wire Rope
ASTM A 653/A 653M	(1997) Steel Sheet, Zinc-Coated (Galvanized) or Zinc-Iron Alloy-Coated (Galvannealed) by the Hot-Dip Process
ASTM E 488	(1996) Strength of Anchors in Concrete and Masonry Elements

AMERICAN SOCIETY OF MECAHNICAL ENGINEERS INTERNATIONAL(ASME)

ASME B18.2.1	(1996) Square and Hex Bolts and Screws (Inch Series)

ASME B18.2.2 (1987; R 1993) Square and Hex Nuts (Inch Series)

COE TECHNICAL INSTRUCTIONS (TI)

TI 809-04 (1998) Seismic Design for Buildings

1.2 SYSTEM DESCRIPTION

1.2.1 General Requirements

The requirements for seismic protection measures described in this section shall be applied to the mechanical equipment and systems outlined in Section 15070 SEISMIC PROTECTION FOR MECHANICAL EQUIPMENT, the electrical equipment and systems outlined in Section 16070 SEISMIC PROTECTION FOR ELECTRICAL EQUIPMENT, and the miscellaneous equipment and systems listed below. Seismic protection requirements shall be in accordance with TI 809-04 and additional data furnished by the Contracting Officer, and shall be provided in addition to any other requirements called for in other sections of these specifications. The design for seismic protection shall be based on a Seismic Use Group II building occupancy and on site response coefficients for **S_{MS} = [_____] and S_{M1} = [_____]**. Resistance to lateral forces induced by earthquakes shall be accomplished without consideration of friction resulting from gravity loads. The basic force formulas, for Ground Motions A and B in Chapter 3 of TI 809-04, use the design spectral response acceleration parameters for the performance objective of the building, not for equipment in the building; therefore, corresponding adjustments to the formulas shall be required.

1.2.2 Mechanical/Electrical Equipment

Mechanical/Electrical equipment shall include the following items to the extent required on the drawings or in the other sections of these specifications:

Boilers
Water Heaters
Expansion Tanks
Switchgear
Ducts
Control Panels
Pumps with Motors
Lighting Fixtures
Switchboards (Floor Mounted)
Suspended /Ceiling Assemblies
Cabinet Heaters
Storage Tanks
Water, Air, Oil and Gas Piping
Air Handling Units
Unit Heaters
Exhaust and Return Fans
Fan Coil Units

Mechanical/Electrical Systems

The following mechanical and electrical systems shall be installed as required on the drawings of these specifications and shall be seismically protected in accordance with this specification:

All Piping Inside the Building in Accordance With This Specification
Gas Distribution Systems
All Water Supply Systems
Storm and Sanitary Sewer Systems

All Process Piping

1.2.3 Miscellaneous Equipment and Systems

The bracing for the miscellaneous equipment and systems shall be developed by the Contractor in accordance with the requirements of this specification.

1.2.4 Exclusion

Seismic protection for piping for fire protection systems shall be installed as specified in Section 13930 WET PIPE SPRINKLER SYSTEM, FIRE PROTECTION.

1.2.5 Pipes and Ducts Requiring No Special Seismic Protection

Seismic restraints may be omitted from the following installations:

a. Gas piping less than 25mm inside diameter.

b. Piping in boiler and mechanical equipment rooms less than 32 mm inside diameter.

c. All other piping less than 38 mm inside diameter.

d. Electrical conduit less than 64 mm inside diameter.

e. Rectangular air handling units less than 0.37 square meters in cross sectional area.

f. Round air handling units less than 457 mm in diameter.

g. Piping suspended by individual hangers 300 mm or less in length from the top or a pipe to the bottom to the supporting structural member where the hanger is attached, except as noted below.

h. Duct suspended by hangers 300 mm or less in length from the top of the duct to the bottom of the supporting structural member, except as noted below.

In exemptions h. and h. all hanger shall meet the length requirements. If the length requirement is exceeded by one hanger in the run, the entire run shall be braced.

1.2.6 All Other Interior Piping, Conduit, and Ducts

Interior piping, conduit, and ducts not covered by the paragraphs Exclusions or Pipes and Ducts Requiring No Special Seismic Restraints shall be seismically protected in accordance with the provisions herein.

1.3 SUBMITTALS

Government approval is required for submittals with a "GA" designation; submittals having an "FIO" designation are for information only. The following shall be submitted in accordance with Section 01330 SUBMITTAL PROCEDURES:

SD-01 Data

Bracing; GA. Equipment Requirements; GA.

Copies of the design calculations with the detail drawings. Calculations shall be stamped by a registered engineer and shall verify the capability of structural members to which bracing is attached for carrying the load from the brace.

SD-04 Drawings

Bracing; FIO. Resilient Vibration Isolation Devices; FIO. Equipment Requirements; FIO.

Detail drawings along with catalog cuts, templates, and erection and installation details, as appropriate, for the items listed. Submittals shall be complete in detail; shall indicate thickness, type, grade, class of metal, and dimensions; and shall show construction details, reinforcement, anchorage, and installation with relation to the building construction. For equipment and systems in buildings that have a performance objective higher than life-safety, the drawings shall be stamped by the registered engineer who stamps the calculations required above.

2 PART 2 PRODUCTS

2.1 BOLTS AND NUTS

Squarehead and hexhead bolts, and heavy hexagon nuts, ASME B18.2.1, ASME B18.2.2, or ASTM A 307 for bolts and ASTM A 563 for nuts ASTM A 325M ASTM A 325 for bolts and nuts. Bolts and nuts used underground and/or exposed to weather shall be galvanized in accordance with ASTM A 153/A 153M.

2.2 SWAY BRACING

Material used for members listed in this section and on the drawings, shall be structural steel conforming with the following:

a. Plates, rods, and rolled shapes, ASTM A 36/A 36M. If the Contractor does the design, both ASTM A 36/A 36M and ASTM A 572/A 572M, grade 503 will be allowed.

b. Wire rope, ASTM A 603.

c. Tubes, ASTM A 500, Grade B.

d. Pipes, ASTM A 53, Type E or S, Grade B.

e. Light gauge angles, less than 6 mm thickness, ASTM A 653/A 653M.

3 PART 3 EXECUTION

3.1 BRACING

Bracing shall conform to the arrangements shown. Trapeze-type hanger shall be secured with not less than two 13 mm bolts.

3.2 BUILDING DRIFT

Sway braces for a piping run shall not be attached to two dissimilar structural elements of a building that may respond differentially during an earthquake unless a flexible joint is provided.

3.3 ANCHOR BOLTS

3.3.1 Cast-In-Place

Floor or pad mounted equipment shall use cast-in-place anchor bolts, except as specified below. One nuts shall be provided on each bolt. Anchor bolts shall conform to ASTM A 307. Anchor bolts shall have an embedded straight length equal to at least 12 times nominal diameter of the bolt. Anchor bolts that exceed the normal depth of equipment foundation piers or pads shall either extend into concrete floor or the foundation shall be increased in depth to accommodate bolt lengths.

3.3.2 Expansion or Chemically Bonded Anchors

Expansion or chemically bonded anchors shall not be used unless test data in accordance with ASTM E 488 has been provided to verify the adequacy of the specific anchor and application. Expansion or chemically bonded anchors shall not be used to resist pull-out in overhead and wall installations if the adhesive is manufactured with temperature sensitive epoxies and the location is accessible to a building fire. Expansion and chemically bonded anchors shall be installed in accordance with the manufacturer's recommendations. The allowable forces shall be adjusted for the spacing between anchor bolts and the distance between the anchor bolt and the nearest edge, as specified by the manufacturer.

3.3.2.1 General Testing

Expansion and chemically bonded anchors shall be tested in place after installation. The tests shall occur not more than 24 hours after installation of the anchor and shall be conducted by an independent testing agency; testing shall be performed on random anchor bolts as described below.

3.3.2.2 Torque Wrench Testing

Torque wrench testing shall be done on not less than 50 percent of the total installed expansion anchors and at least one anchor for every piece of equipment containing more than two anchors. The test torque shall equal the minimum required installation torque as required by the bolt manufacturer. Torque wrenches shall be calibrated at the beginning of each day the torque tests are performed. Torque wrenches shall be recalibrated for each bolt diameter whenever tests are run on bolts of various diameters. The applied torque shall be between 20 and 100 percent of wrench capacity. The test torque shall be reached within one half turn of the nut, except for 9 mm sleeve anchors which shall reach their torque by one quarter turn of the nut. If any anchor fails the test, similar anchors not previously tested

shall be tested until 20 consecutive anchors pass. Failed anchors shall be retightened and retested to the specified torque; if the anchor still fails the test it shall be replaced.

3.3.2.3 Pullout Testing

Expansion and chemically bonded anchors shall be tested by applying a pullout load using a hydraulic ram attached to the anchor bolt. At least 5 percent of the anchors, but not less than 3 per day shall be tested. The load shall be applied to the anchor without removing the nut; when that is not possible, the nut shall be removed and a threaded coupler shall be installed of the same tightness as the original nut. The test setup shall be checked to verify that the anchor is not restrained from withdrawing by the baseplate, the test fixture, or any other fixtures. The support for the testing apparatus shall be at least 1.5 times the embedment length away from the bolt being tested. Each tested anchor shall be loaded to 1 times the design tension value for the anchor. The anchor shall have no observable movement at the test load. If any anchor fails the test, similar anchors not previously tested shall be tested until 20 consecutive anchors pass. Failed anchors shall be retightened and retested to the specified load; if the anchor still fails the test it shall be replaced.

3.4 RESILIENT VIBRATION ISOLATION DEVICES

Where the need for these devices is determined, based on the magnitude of the design seismic forces, selection of anchor bolts for vibration isolation devices and/or snubbers for equipment base and foundations shall follow the same procedure as in paragraph ANCHOR BOLTS, except that an equipment weight equal to five times the actual equipment weight shall be used.

3.4.1 Resilient and Spring-Type Vibration Devices

Vibration isolation devices shall be selected so that the maximum movement of equipment from the static deflection point shall be 13 mm.

3.4.2 Multidirectional Seismic Snubbers

Multidirectional seismic snubbers employing elastomeric pads shall be installed on floor- or slab-mounted equipment. These snubbers shall provide 6 mm free vertical and horizontal movement from the static deflection point. Snubber medium shall consist of multiple pads of cotton duct and neoprene or other suitable materials arranged around a flanged steel trunnion so both horizontal and vertical forces are resisted by the snubber medium.

3.5 SWAY BRACES FOR PIPING

Transverse sway bracing for steel and copper pipe shall be provided at intervals not to exceed those shown on the drawings. Transverse sway bracing for pipes of materials other than steel and copper shall be provided at intervals not to exceed the hanger spacing as specified in Section 15400 PLUMBING, GENERAL PURPOSE. Bracing shall consist of at least one vertical angle 50 x 50 mm x 16 gauge and one diagonal angle of the same size.

3.5.1 Longitudinal Sway Bracing

Longitudinal sway bracing shall be provided in accordance with Section 15070 SEISMIC CONTROL FOR MECHANICAL EQUIPMENT.

3.5.2 Anchor Rods, Angles, and Bars

Anchor rods, angles, and bars shall be bolted to either pipe clamps or pipe flanges at one end and cast-in-place concrete or masonry insert or clip angles bolted to the steel structure on the other end. Rods shall be solid metal or pipe as specified below. Anchor rods, angles, and bars shall not exceed lengths given in the tabulation below.

3.5.3 Maximum Length for Anchor Braces

Type	Size (millimeters)	Maximum Length* (meters)
Angles	38 x 38 x 6	1.5
	50 x 50 x 6	2.0
	64 x 38 x 6	2.5
	75 x 64 x 6	2.5
	75 x 75 x 6	3.0
Rods	91	1.0
	22	1.0
Flat Bars	38 x 6	0.4
	50 x 6	0.4
	50 x 10	0.5
Pipes (40s)	25	2.0
	32	2.8
	40	3.2
	50	4.0

3.5.4 Bolts

Bolts used for attachment of anchors to pipe and structure shall be not less than 13 mm diameter.

3.6 EQUIPMENT SWAY BRACING

3.6.1 Suspended Equipment and Light Fixtures

Equipment sway bracing shall be provided for items supported from overhead floor or roof structural systems, including light fixtures. Braces shall consist of angles, rods, wire rope, bars, or pipes arranged as shown and secured at both ends with not less than 13 mm bolts. Sufficient braces shall be provided for equipment to resist a horizontal force equal to 0.94 times the weight of equipment without exceeding safe working stress of bracing components. Details of equipment bracing shall be submitted for acceptance. In lieu of bracing with vertical supports, these items may be supported with hangers inclined at 45 degrees directed up and radially away from equipment and oriented symmetrically in 90-degree intervals on the horizontal plane, bisecting the angles of each corner of the equipment, provided

that supporting members are properly sized to support operating weight of equipment when hangers are inclined at a 45-degree angle.

3.6.2 Floor or Pad Mounted Equipment

3.6.2.1 Shear Resistance

Floor mounted equipment shall be bolted to the floor. Requirements for the number and installation of bolts to resist shear forces shall be in accordance with paragraph ANCHOR BOLTS.

3.6.2.2 Overturning Resistance

The ratio of the overturning moment from seismic forces to the resisting moment due to gravity loads shall be used to determine if overturning forces need to be considered in the sizing of anchor bolts. Calculations shall be provided to verify the adequacy of the anchor bolts for combined shear and overturning.

END OF SECTION

SECTION 13120

STANDARD METAL BUILDING SYSTEMS

1 PART 1 GENERAL

1.1 REFERENCES

The publications listed below form a part of this specification to the extent referenced. The publications are referred to in the text by basic designation only.

ALUMINUM ASSOCIATION (AA)

AA-01	(1997) Aluminum Standards and Data
AA-02	(1994) Aluminum Design Manual: Specification & Guidelines for Aluminum Structures

AMERICAN ARCHITECTURAL MANUFACTURERS ASSOCIATION (AAMA)

AAMA AAMA/NWWDA 101	(1997) Voluntary Specifications for Aluminum, Vinyl (PVC) and Wood Windows and Glass Doors

AMERICAN INSTITUTE OF STEEL CONSTRUCTION (AISC)

AISC FCD	(1995a) Quality Certification Program Description
AISC Pub No. S303	(1992) Code of Standard Practice for Steel Buildings and Bridges
AISC Pub No. S329	(1985; Appx A June 1994) Allowable Stress Design Specification for Structural Joints Using ASTM A 325 or A 490 Bolts
AISC-04	(1989) Specification for Structural Steel Buildings - Allowable Stress Design, Plastic Design
AISC Pub No. S342 L	(1993) Load and Resistance Factor Design Specification for Structural Steel Buildings

AMERICAN IRON AND STEEL INSTITUTE (AISI)

AISI-01	(1996) Cold-Formed Steel Design Manual

AMERICAN SOCIETY FOR TESTING AND MATERIALS (ASTM)

ASTM A 36/A 36M	(1997a) Carbon Structural Steel

ASTM A 53	(1997) Pipe, Steel, Black and Hot-Dipped, Zinc-Coated, Welded and Seamless
ASTM A 252	(1996) Welded and Seamless Steel Pipe Piles
ASTM A 325	(1997) Structural Bolts, Steel, Heat Treated, 120/105 ksi Minimum Tensile Strength
ASTM A 325M	(1993) High-Strength Bolts for Structural Steel Joints (Metric)
ASTM A 463/A 463M	(1996a) Steel Sheet, Aluminum-Coated by the Hot-Dip Process
ASTM A 490	(1997) Heat-Treated Steel Structural Bolts, 150 ksi Minimum Tensile Strength
ASTM A 490M	(1993) High-Strength Steel Bolts, Classes 10.9 and 10.9.3, for Structural Steel Joints (Metric)
ASTM A 500	(1996) Cold-Formed Welded and Seamless Carbon Steel Structural Tubing in Rounds and Shapes
ASTM A 501	(1996) Hot-Formed Welded and Seamless Carbon Steel Structural Tubing
ASTM A 529/A 529M	(1996) High-Strength Carbon-Manganese Steel of Structural Quality
ASTM A 570/A 570M	(1996) Steel, Sheet and Strip, Carbon, Hot-Rolled, Structural Quality
ASTM A 572/A 572M	(1997a) High-Strength Low-Alloy Columbium-Vanadium Structural Steel
ASTM A 588/A 588M	(1997) High-Strength Low-Alloy Structural Steel with 50 ksi (345 MPa) Minimum Yield Point to 4 in. (100 mm) Thick
ASTM A 606	(1997) Steel, Sheet and Strip, High-Strength, Low-Alloy, Hot-Rolled and Cold-Rolled, with Improved Atmospheric Corrosion Resistance
ASTM A 607	(1996) Steel, Sheet and Strip, High-Strength, Low-Alloy, Columbium or Vanadium, or Both, Hot-Rolled and Cold-Rolled
ASTM A 618	(1996) Hot-Formed Welded and Seamless High-Strength Low-Alloy Structural Tubing
ASTM A 653/A 653M	(1997) Steel Sheet, Zinc-Coated (Galvanized) or Zinc-Iron Alloy-Coated (Galvannealed) by the Hot-Dip Process
ASTM A 792/A 792M	(1997) Steel Sheet, 55% Aluminum-Zinc Alloy-Coated by the Hot-Dip Process

ASTM B 117	(1997) Operating Salt Spray (Fog) Apparatus
ASTM B 209	(1996) Aluminum and Aluminum-Alloy Sheet and Plate
ASTM B 209M	(1995) Aluminum and Aluminum-Alloy Sheet and Plate (Metric)
ASTM B 221	(1996) Aluminum and Aluminum-Alloy Extruded Bars, Rods, Wire, Profiles, and Tubes
ASTM B 221M	(1996) Aluminum and Aluminum-Alloy Extruded Bars, Rods, Wire, Profiles, and Tubes (Metric)
ASTM B 241/B 241M	(1996) Aluminum and Aluminum-Alloy Seamless Pipe and Seamless Extruded Tube
ASTM B 308/B 308M	(1996) Aluminum-Alloy 6061-T6 Standard Structural Profiles
ASTM B 429	(1995) Aluminum-Alloy Extruded Structural Pipe and Tube
ASTM C 518	(1991) Steady-State Heat Flux Measurements and Thermal Transmission Properties by Means of the Heat Flow Meter Apparatus
ASTM C 553	(1992) Mineral Fiber Blanket Thermal Insulation for Commercial and Industrial Applications
ASTM C 578	(1995) Rigid, Cellular Polystyrene Thermal Insulation
ASTM C 612	(1993) Mineral Fiber Block and Board Thermal Insulation
ASTM C 991	(1992) Flexible Glass Fiber Insulation for Pre-Engineered Metal Buildings
ASTM C 1289	(1995) Faced Rigid Cellular Polyisocyanurate Thermal Insulation Board
ASTM D 522	(1993a) Mandrel Bend Test of Attached Organic Coatings
ASTM D 523	(1989; R 1994) Specular Gloss
ASTM D 714	(1987; R 1994) Evaluating Degree of Blistering of Paints
ASTM D 968	(1993) Abrasion Resistance of Organic Coatings by Falling Abrasive
ASTM D 1308	(1987; R 1993) Effect of Household Chemicals on Clear and Pigmented Organic Finishes
ASTM D 1654	(1992) Evaluation of Painted or Coated Specimens Subjected to Corrosive Environments
ASTM D 2244	(1993) Calculation of Color Differences from Instrumentally Measured

	Color Coordinates
ASTM D 2247	(1994) Testing Water Resistance of Coatings in 100 % Relative Humidity
ASTM D 2794	(1993) Resistance of Organic Coatings to the Effects of Rapid Deformation (Impact)
ASTM D 3359	(1995a) Measuring Adhesion by Tape Test
ASTM D 3841	(1992) Glass-Fiber-Reinforced Polyester Plastic Panels
ASTM D 4214	(1997) Evaluating the Degree of Chalking of Exterior Paint Films
ASTM D 4397	(1996) Polyethylene Sheeting for Construction, Industrial, and Agricultural Applications
ASTM D 4587	(1991) Conducting Tests on Paint and Related Coatings and Materials Using a Fluorescent UV-Condensation Light - and Water-Exposure Apparatus
ASTM E 84	(1996a) Surface Burning Characteristics of Building Materials
ASTM E 96	(1995) Water Vapor Transmission of Materials

AMERICAN SOCIETY OF CIVIL ENGINEERS (ASCE)

ASCE 7	(1995) Minimum Design Loads for Buildings and Other Structures

AMERICAN WELDING SOCIETY (AWS)

AWS D1.1	(1996) Structural Welding Code - Steel

MATERIAL HANDLING INDUSTRY (MHI)

MHI CMAA 70	(1994) Electric Overhead Traveling Cranes

METAL BUILDING MANUFACTURERS ASSOCIATION (MBMA)

MBMA-01	(1996) Low Rise Building Systems Manual

SHEET METAL & AIR CONDITIONING CONTRACTORS' NATIONAL ASSOCIATION (SMACNA)

SMACNA-02	(1993; Errata) Architectural Sheet Metal Manual

STEEL DOOR INSTITUTE (SDOI)

SDOI SDI-100	(1991) Standard Steel Doors and Frames

STEEL WINDOW INSTITUTE (SWI)

SWI-01	(1995) The Specifier's Guide to Steel Windows

UNDERWRITERS LABORATORIES (UL)

UL 580	(1994; Rev thru Sep 1997) Tests for Uplift Resistance of Roof Assemblies

1.2 GENERAL REQUIREMENTS

The metal building system covered under this specification shall be provided by a single manufacturer and shall include all components and assemblies that form a building. Structural Standing Seam Metal Roofing System, when specified, shall be furnished as part of a single manufacturer's system.

1.2.1 Building Configuration

Buildings shall have structural steel main building frames, and secondary framing including purlins and girts, engineered and fabricated by the building systems supplier. Buildings shall have vertical walls and gable roof system including gutters and downspouts. Roof slope shall be as shown on the drawings. Buildings shall be single-span or multiple-span structures with one of the following framing systems: Lean-to’s with rigid frames and rigid frames,self-framing rigid frame. Building dimensions shall be not less than those indicated. The minimum inside clear dimensions shall be as shown on the drawings.

1.2.2 Qualifications

1.2.2.1 Manufacturer

Metal building shall be the product of a recognized steel building systems manufacturer who has been in the practice of manufacturing steel building systems for a period of not less than 5 years. The manufacturer shall be chiefly engaged in the practice of designing and fabricating steel building systems. The manufacturer shall be certified under the Metal Building Systems (MB) Certification Program, AISC FCD. Structural framing and covering shall be designed by a licensed Professional Engineer experienced in design of this work.

1.2.2.2 Installer

Erector shall have specialized experience in the erection of steel building systems for a period of at least 3 years. Framing shall be erected in accordance with MBMA-01, common industry practices and erection instructions describing the basic sequence of assembly, temporary bracing, shoring, and related information necessary for erection of the metal building including its structural framework and components. The erector shall furnish temporary guys and bracing where needed for squaring, plumbing, and securing the structural framing against loads acting on the exposed framing, such as wind loads and seismic forces, as well as loads due to erection equipment and erection operation. Bracing furnished by the manufacturer for the metal building system shall not be assumed to be adequate during erection. Structural members shall not be field cut or altered without approval of the metal building manufacturer. Welds, abrasions, and surfaces not shop primed shall be primed after erection.

1.2.2.3 Manufacturer's Representative

A representative designated by the building manufacturer, who is familiar with the design of the building supplied and experienced in the erection of metal buildings similar in size to the one required under this contract, shall be present at the job site during construction, ~~from~~ at the start and completion of the structural framing erection, ~~until~~ at the completion of the installation of the exterior covering, ~~to~~ and at any critical/problem phase to assure that the building is erected properly.

1.3 DESIGN REQUIREMENTS

Criteria, loading combinations, and definitions shall be in accordance with ASCE 7.

1.3.1 Dead Loads

The dead load shall consist of the weight of all permanent construction such as roof, framing, covering members and all other materials of the building system.

1.3.2 Collateral Loads

Collateral load of 480 Pa shall be applied to the entire structure to account for the weight of additional permanent materials other than the building system, such as sprinklers, mechanical systems, electrical systems, hung partitions, and ceilings. This allowance does not include the weight of hung equipment weighing 25 kg or more. Equipment loads of 25 kg or more shall be shown on the shop (detail) drawings and the structure (frame, purlins, girts) shall be strengthened as required. The Contractor is responsible for providing the building manufacturer the magnitude and approximate location of all concentrated loads greater than 25 kgs before design of the building commences.

1.3.3 Roof Live Loads

1.3.3.1 Uniform Loads

Uniform roof live loads, including maintenance traffic and construction loads, shall be determined and applied in accordance with ASCE 7.

1.3.3.2 Concentrated Loads

In addition to ASCE 7 roof live loads, a minimum design concentrated load of 1335 N shall be used to simulate a construction load on roof panels. The concentrated load shall be applied at the panel midspan and shall be resisted by a single standing seam metal roof panel, or a 610 mm wide corrugated metal panel, assumed to be acting as a beam. The undeformed shape of the panel shall be used to determine the section properties.

1.3.4 Roof Snow Loads

The design roof snow loads, including effects of drifting, shall be determined and applied in accordance with ASCE 7 unless otherwise shown on the contract drawings.

1.3.5 Wind Loads

Wind pressures shall be computed and applied in accordance with ASCE 7 unless otherwise shown on the contract drawings.

1.3.6 Seismic Loads

Seismic loads shall be computed for seismic zone 3 in accordance with ASCE 7 using an importance factor of 1.0.

1.3.7 Foundations

Foundations shall be designed for an allowable soil bearing pressure of 192 Pa, a minimum bottom of footing depth of 450 mm below finished grade elevation, a factor of safety of 1.5 for overturning, sliding and uplift, and a concrete compressive strength as indicated on drawings.

1.3.8 Framing and Structural Members

Structural steel members and their connections shall be designed in accordance with AISC-04 or AISC Pub No. S342 L. Structural cold-formed steel framing members and their connections shall be designed in accordance with AISI-01. Aluminum structural members and their connections shall be designed in accordance with AA-02. Maximum deflection under applied live load, snow, or wind load shall not exceed 1/180th of the span length. Members with openings in their webs shall be designed with consideration of the additional stresses which will result due to the openings. Deflections of the steel framing above and along the side of commercially framed door openings shall be limited to a maximum allowable deflection of 1/360 of the opening width to ensure proper operation of the doors. The contractor shall include the loads that the door transfers to the building frame in the design. Framed openings shall be designed to structurally replace the covering and framing displaced. The subpurlin and/or purlin spacing shall not exceed 600 mm on centers at the corner, edge and ridge zones, and 1200 mm maximum on centers for the remainder of the roof. For Entrance Lobby support, it shall be the responsibility of the Contractor to furnish complete design for the Entrance Lobby Area framing, including primary and secondary framing connections, base plates and anchor bolts. Design of framing, base plates, anchor bolts and all connections shall be for the loads specified on Drawing Plate S1.1 and shall be in accordance with 9th Edition of the AISC Manual. Complete design calculations and fabrication shop drawings for the Entrance Lobby framing system including connections and anchorage shall be submitted for approval.

1.3.9 Roofing and Siding

Except as otherwise specified, steel roofing and siding shall be designed in accordance with AISI-01. Aluminum roofing and siding shall be designed in accordance with AA-01. Section modulus and moment of inertia of aluminum sheet shall be determined for actual cross section dimensions by the conventional methods for actual design stresses and by effective width concept for deflection in accordance with AA-02. Maximum deflection for wall and roof panels under applied live load, snow or wind loads shall not exceed 1/180th of the span length. The design analysis shall establish that the roof, when deflected under loading combinations, shall not result in ponding. Maximum deflections shall be based on sheets continuous across two or more supports with sheets unfastened and fully free to

deflect. The calculated deflection from the concentrated load shall not exceed 1/180 of the span length. The methods for resisting lateral loads shall be cross-bracing, rigid frames, or wind columns.

1.3.10 Provisions for Gutters And Downspouts

Gutters and downspouts shall be designed according to the requirements of SMACNA-02 for storms which should be exceeded only once in 5 years and with adequate provisions for thermal expansion and contraction. Supports for gutters and downspouts shall be designed for the anticipated loads.

1.3.11 Drift Provisions

Lateral deflections, or drift, at any point along the height of a structure in relation to the base of the building, caused by movement of horizontal force resisting elements, shall not exceed H/600.

~~1.3.12 Grounding and Lightning Protection~~

~~Grounding and lightning protection shall be provided as specified in Section 13100 LIGHTNING PROTECTION SYSTEM.~~

1.4 DESIGN ANALYSIS

The design analysis shall be the design of a licensed Professional Engineer experienced in design of this work and shall include complete calculations for the building, its components, and the foundations. Foundations shown on the drawings are based on loads derived from a representative set of similar building types. The Contractor shall obtain the services of a licensed Professional Engineer to verify that the foundations shown are adequate for the building supplied using the criteria in paragraph Foundations. Formulas and references shall be identified. Assumptions and conclusions shall be explained, and cross-referencing shall be clear. Wind forces on various parts of the structure, both positive and negative pressure, shall be calculated with the controlling pressure summarized. Lateral forces due to seismic loading shall be calculated and tabulated for the various parts and portions of the building. Computer programmed designs shall be accompanied by stress values and a letter of certification, signed by a licensed Professional Engineer, stating the design criteria and procedures used and attesting to the adequacy and accuracy of the design. A narrative of the computer program delineating the basic methodology shall be included. Computer program output shall be annotated and supplemented with sketches to identify and verify the input and output. Critical load conditions used in the final sizing of the members shall be emphasized. The design analysis shall include the name and office phone number of the designer, who shall function as a point of contact to answer questions during the detail drawing review.

1.5 SUBMITTALS

Government approval is required for submittals with a "GA" designation; submittals having an "FIO" designation are for information only. The following shall be submitted in accordance with Section 01330 SUBMITTAL PROCEDURES:

SD-01 Data

Design Analysis; GA.

Design analysis (building and foundations including anchor bolt plans) as one package with the drawings.

Instruction Manuals; FIO.

Manufacturer's literature for individual building component systems.

Erection Procedures; GA.

Manufacturer's erection instruction and erection drawings describing the preparation requirements, assembly sequence, temporary bracing, shoring, and related information necessary for erection of the metal building including its structural framework and components.

SD-04 Drawings

Metal Building Systems; GA.

Detail drawings consisting of catalog cuts, design and erection drawings, and an isometric view of the roof showing the design wind uplift pressure and dimensions of edge and corner zones. Shop painting and finishing specifications. Anchor bolt placement plan and column reactions.

SD-08 Statements

Qualifications; FIO.

Qualifications of the manufacturer, the manufacturer's Representative when one is used, and qualifications and experience of the building erector. A brief list of locations where buildings of similar design have been used shall be included with the detail drawings and shall also include information regarding date of completion, name and address of owner, and how the structure is used.

SD-13 Certificates

Metal Building Systems; GA.

a. A Certificate from the metal building manufacturer stating that the metal building was designed from a complete set of the contract drawings and specifications and that the building furnished complies with the specified requirements.

b. Mill certification for structural bolts, framing steel, roofing and siding, and steel wall liner panels.

c. Warranty certificate. At the completion of the project the Contractor shall furnish signed copies of the 5-year Warranty for Metal Building System, a sample copy of which is attached to this section, the 20-year Manufacturer's Material Warranties, and the Manufacturer's 20-year System Weathertightness Warranty when one is required.

Insulation; FIO.

Certificate attesting that the polyisocyanurate insulation furnished for the project contains recovered material, and showing an estimated percent of such recovered material.

SD-14 Samples

Accessories; FIO.

One sample of each type of flashing, trim, closure, cap and similar items. Size shall be sufficient to show construction and configuration.

Roofing and Siding; FIO.

One piece of each type and finish (exterior and interior) to be used, 225 mm long, full width. The sample for factory color finished covering shall be accompanied by certified laboratory test reports showing that the sheets to be furnished are produced under a continuing quality control program and that a representative sample consisting of not less than 5 pieces has been tested and has met the quality standards specified for factory color finish.

Fasteners; FIO.

Two samples of each type to be used, with statement regarding intended use. If so requested, random samples of bolts, nuts, and washers as delivered to the job site shall be taken in the presence of the Contracting Officer and provided to the Contracting Officer for testing to establish compliance with specified requirements.

Insulation; FIO.

One piece of each type to be used, and descriptive data covering installation.

Gaskets and Insulating Compounds; FIO.

Two samples of each type to be used and descriptive data.

Sealant; FIO.

One sample, approximately 0.5 kg, and descriptive data.

One piece, 225 mm long, full width.

1.6 DELIVERY AND STORAGE

Materials shall be delivered to the site in a dry and undamaged condition and stored out of contact with the ground. Materials other than framing and structural members shall be covered with weathertight coverings and kept dry. Storage accommodations for roofing and siding shall provide good air circulation and protection from surface staining.

1.7 WARRANTIES

The Metal Building System, composed of framing and structural members, roofing and siding, gutters and downspouts, accessories, fasteners, trim, and miscellaneous building closure items such as doors and windows (when furnished by the manufacturer) shall be warranted as described below against material and workmanship deficiencies, system deterioration caused by exposure to the elements and service design loads, leaks and wind uplift damage. Any emergency temporary repairs conducted by the owner shall not negate the warranties.

1.7.1 Prime Contractor's Weathertightness Warranty

The Metal Building System shall be warranted by the Contractor on a no penal sum basis for a period of five years against materials and workmanship deficiencies; system deterioration caused by exposure to the elements and/or inadequate resistance to specified service design loads, water leaks, and wind uplift damage. The Metal Building System covered under this warranty shall include but is not limited to the following: framing and structural members, roofing and siding panels and seams, interior or exterior gutters and downspouts, accessories, fasteners, trim, flashings and miscellaneous building closure items such as doors and windows (when furnished by the manufacturer), connectors, components, and fasteners, and other system components and assemblies installed to provide a weathertight system; and items specified in other sections of these specifications that become part of the metal building system. All material and workmanship deficiencies, system deterioration caused by exposure to the elements and/or inadequate resistance to specified service design loads, water leaks and wind uplift damage shall be repaired as approved by the Contracting Officer. See the attached Contractor's written warranty for issue resolution of warrantable defects. This warranty shall warrant and cover the entire cost of repair or replacement, including all material, labor, and related markups. The Contractor shall supplement this warranty with written warranties from the installer and/or system manufacturer, which shall be submitted along with Contractor's warranty. However, the Contractor is ultimately responsible for this warranty. The Contractor's written warranty shall be as outlined in attached **WARRANTY FOR METAL BUILDING SYSTEMS,** and start upon final acceptance of the facility. The Contractor shall provide a separate bond in an amount equal to the installed total metal building system cost in favor of the owner (Government) covering the Contractor's warranty responsibilities effective throughout the five year Contractor's warranty period for the entire metal building system as outlined above.

1.7.2 Manufacturer's Material and/or System Weathertightness Warranties

The Contractor shall furnish, in writing, the following manufacturer's material warranties to the Contracting Officer which cover all Metal Building System components:

a. A manufacturer's 20 year material warranty warranting that the specified aluminum, zinc-coated steel, aluminum-zinc alloy coated steel or aluminum-coated steel will not rupture, structurally fail, fracture, deteriorate, or become perforated under normal design atmospheric conditions and service design loads. Liability under this warranty shall be limited exclusively to the cost of either repairing or replacing nonconforming, ruptured, perforated, or structurally failed securement system including fasteners and coil material.

b. A manufacturer's 20 year exterior material finish warranty on the factory colored finish warranting that the finish, under normal atmospheric conditions at the site, will not crack, peel, or delaminate; chalk in excess of a numerical rating of eight, as determined by ASTM D 4214test procedures; or change colors in excess of five CIE or Hunter Lab color difference (delta E) units in accordance with ASTM D 2244. Liability under this warranty is exclusively limited to replacing the defective coated material.

1.8 COORDINATION MEETING

A coordination meeting shall be held within 45 days after contract award for mutual understanding of the metal building system contract requirements. This meeting shall take place at the building site and shall include representatives from the Contractor, the roofing/metal building system manufacturer, the roofing/metal building supplier, the erector, the designer, and the Contracting Officer. All items required by paragraph SUBMITTALS shall be discussed, including applicable standard manufacturer shop drawings, and the approval process. The Contractor shall coordinate time and arrangements for the meeting

2 PART 2 PRODUCTS

2.1 BUILDING COMPONENTS

Each piece or part of the assembly shall be clearly and legibly marked to correspond with the drawings.

2.2 FRAMING AND STRUCTURAL MEMBERS

Steel 3 mm (1/8 inch) or more in thickness shall conform to ASTM A 36/A 36M, ASTM A 529/A 529M, ASTM A 572/A 572M, or ASTM A 588/A 588M. Uncoated steel less than 3 mm (1/8 inch) in thickness shall conform to ASTM A 570/A 570M, ASTM A 606, or ASTM A 607. Galvanized steel shall conform to ASTM A 653/A 653M, G 90 coating designation, 1.143 mm (0.045 inch) minimum thickness. Aluminum-zinc coated steel shall conform to ASTM A 792/A 792M, AZ 55 coating designation, 1.143 mm (0.045 inch) minimum thickness. Aluminum sheet shall conform to ASTM B 209M , 0.813 mm (0.032 inch) minimum thickness. Aluminum structural shapes and tubes shall conform to ASTM B 221M , or ASTM B 308/B 308M. Structural pipe shall conform to ASTM A 53, ASTM A 252, ASTM A 500, ASTM A 501, ASTM A 618, ASTM B 221M , ASTM B 241/B 241M or ASTM B 429. Holes for structural connections shall be made in the shop.

2.3 ROOFING AND SIDING

Roofing and siding shall be either steel or aluminum and shall have a factory color finish.

2.3.1 Roofing

Roofing is specified in Section 07416 STRUCTURAL STANDING SEAM METAL ROOF SSSMR SYSTEM.

2.3.2 Siding

Length of sheet shall be sufficient to cover the entire height of any unbroken height of wall surface unless otherwise approved. Width of sheets with overlapping configurations shall provide not less than 610 mm (24 inches) of coverage in place, interlocking ribs shall provide not less than 305 mm (12 inches) of coverage in place. Provisions shall be made for thermal expansion and contraction consistent with the type of system to be used. Siding shall have [configurations for overlapping adjacent sheets] [or] [interlocking ribs for securing adjacent sheets]. Siding shall be fastened to framework using [exposed] [or] [concealed] fasteners.

2.3.3 Steel Panels

Steel roofing panels are specified in Section 07416 STRUCTURAL STANDING SEAM METAL ROOF (SSSMR) SYSTEM. Siding shall be zinc-coated steel conforming to ASTM A 653/A 653M, G 90 coating designation; aluminum-zinc alloy coated steel conforming to ASTM A 792/A 792M, AZ 55 coating; or aluminum-coated steel conforming to ASTM A 463/A 463M, Type 2, coating designation T2 E5. Panels shall be 0.610 mm (0.024 inch) thick minimum, except that when the mid field of the roof is subject to design wind uplift pressures of 2.87 kPa (60 psf) or greater or the steel covering is used as a diaphragm, the entire roof system shall have a minimum thickness of 0.762 mm (0.030 inch). Prior to shipment, mill finish panels shall be treated to inhibit the formation of oxide corrosion. Panels that have become wet during shipment but have not started to oxidize shall be dried, and retreated in accordance with manufacturer's standard practice.

2.3.4 Aluminum Panels

Aluminum roofing panels are specified in Section 07416 STRUCTURAL STANDING SEAM METAL ROOF (SSSMR) SYSTEM. Siding shall be aluminum alloy conforming to ASTM B 209M , temper as required for the forming operation, minimum 0.813 mm (0.032 inch) thick.
source of food and shelter for insects. Panels shall be not less than 200 mm wide and shall be in one piece for unbroken wall heights.

2.3.5 Factory Color Finish

Panels shall have a factory applied polyvinylidene fluoride PVF2 finish on the exposed side. The exterior finish shall consist of a baked-on topcoat with an appropriate prime coat. Color shall match the color indicated on the drawings. The exterior coating shall be a nominal 0.050 mm thickness consisting of a topcoat of not less than 0.018 mm dry film thickness and the paint manufacturer's recommended primer of not less than 0.025 mm thickness. The interior color finish shall consist of the same coating and dry film thickness as the exterior otherwise the same as the exterior thickness of. The exterior color finish shall meet the test requirements specified below.

2.3.5.1 Salt Spray Test

A sample of the sheets shall withstand a salt spray test for a minimum of 1000 hours in accordance with ASTM B 117, including the scribe requirement in the test. Immediately upon removal of the panel from the test, the coating shall receive a rating of not less than 8F, few No. 8 blisters, 10, no blistering, as determined by ASTM D 714; and a rating of 6, 3 mm 8, 1 mm failure at scribe, as determined by ASTM D 1654.

2.3.5.2 Formability Test

When subjected to testing in accordance with ASTM D 522 Method B, 3 mm diameter mandrel, the coating film shall show no evidence of cracking to the naked eye.

2.3.5.3 Accelerated Weathering, Chalking Resistance and Color Change

A sample of the sheets shall be tested in accordance with ASTM D 4587, test condition B for 2000 total hours. The coating shall withstand the weathering test without cracking, peeling, blistering, loss of adhesion of the protective coating, or corrosion of the base metal. Protective coating that can be readily removed from the base metal with tape in accordance with ASTM D 3359, Test Method B, shall be considered as an area indicating loss of adhesion. Following the accelerated weathering test, the coating shall have a chalk rating not less than No. 8 in accordance with ASTM D 4214test procedures, and the color change shall not exceed 5 CIE or Hunter Lab color difference (delta E) units in accordance with ASTM D 2244. For sheets required to have a low gloss finish, the chalk rating shall be not less than No. 6 and the color difference shall be not greater than 7 units.

2.3.5.4 Humidity Test

When subjected to a humidity cabinet test in accordance with ASTM D 2247 for 1000 hours, a scored panel shall show no signs of blistering, cracking, creepage or corrosion.

2.3.5.5 Impact Resistance

Factory-painted sheet shall withstand direct and reverse impact in accordance with ASTM D 2794 13 mm diameter hemispherical head indenter, equal to 6.7 times the metal thickness in mm, expressed in Newton-meters, with no loss of adhesion.

2.3.5.6 Abrasion Resistance Test

When subjected to the falling sand test in accordance with ASTM D 968, Method A, the coating system shall withstand a minimum of [50] [80] liters of sand before the appearance of the base metal. The term "appearance of base metal" refers to the metallic coating on steel or the aluminum base metal.

2.3.5.7 Pollution Resistance

Coating shall show no visual effects when covered spot tested in a 10 percent hydrochloric acid solution for 24 hours in accordance with ASTM D 1308

2.3.6 Accessories

Flashing, trim, metal closure strips and curbs, fascia, caps, diverters, and similar metal accessories shall be the manufacturer's standard products. Exposed metal accessories shall be finished to match the building finish. Molded closure strips shall be bituminous-saturated fiber, closed-cell or solid-cell synthetic rubber or neoprene, or polyvinyl chloride premolded to match configuration of the roofing or siding and shall not absorb or retain water.

2.4 FASTENERS

Fasteners for standing seam metal roofs shall be in accordance with Section 07416 STRUCTURAL STANDING SEAM METAL ROOF SSSMR SYSTEM. Steel wall panels shall be zinc-coated steel, aluminum, corrosion resisting steel, or nylon capped steel, type and size specified below or as otherwise approved for the applicable requirements. Fasteners for aluminum wall panels shall be aluminum or corrosion resisting steel. Fasteners for attaching wall panels to supports shall provide both tensile and shear strength of not less than 3.34 kN (750 lbs) per fastener. Fasteners for accessories shall be the manufacturer's standard. Exposed wall fasteners shall be color finished or provided with plastic color caps to match the covering. Nonpenetrating fastener system for wall panels using concealed clips shall be manufacturer's standard for the system provided.

2.4.1 Screws

Screws shall be as recommended by the manufacturer to meet the design strength requirements.

2.4.2 End-Welded Studs

Automatic end-welded studs shall be shouldered type with a shank diameter of not less than 5 mm and cap or nut for holding covering against the shoulder.

2.4.3 Explosive Actuated Fasteners

Fasteners for use with explosive actuated tools shall have a shank of not less than 3.68 mm with a shank length of not less than 13 mm for fastening panels to steel and not less than 25 mm for fastening panels to concrete.

2.4.4 Blind Rivets

Blind rivets shall be aluminum with 5 mm nominal diameter shank or stainless steel with 3 mm nominal diameter shank. Rivets shall be threaded stem type if used for other than the fastening of trim. Rivets with hollow stems shall have closed ends.

2.4.5 Bolts

Bolts shall be not less than 6 mm diameter, shouldered or plain shank as required, with proper nuts.

3 PART 3 EXECUTION

3.1 ERECTION

Dissimilar materials which are not compatible when contacting each other shall be insulated from each other by means of gaskets or insulating compounds. Improper or mislocated drill holes in panels shall be plugged with an oversize screw fastener and gasketed washer; however, panels with an excess of such holes or with such holes in critical locations shall not be used. Exposed surfaces shall be kept clean and free from sealant, metal cuttings, excess material from thermal cutting, and other foreign materials. Exposed surfaces which have been thermally cut shall be finished smooth within a tolerance of 3 mm. Stained, discolored or damaged sheets shall be removed from the site. Welding of steel shall conform to AWS D1.1; welding of aluminum shall conform to AA-02.

3.1.1 Framing Members and Anchor Bolts

Erection shall be in accordance with the approved erection instructions and drawings and with applicable provision of AISC-04. Framing members fabricated or modified on site shall be saw or abrasive cut; bolt holes shall be drilled. Onsite flame cutting of framing members, with the exception of small access holes in structural beam or column webs, will not be permitted. High-strength bolting shall conform to AISC Pub No. S329 using ASTM A 325M or ASTM A 490, ASTM A 490M bolts. Improper or mislocated bolt holes in structural members or other misfits caused by improper fabrication or erection, shall be repaired in accordance with AISC Pub No. S303. Concrete work is specified in Section 03300 CAST-IN-PLACE STRUCTURAL CONCRETE. Anchor bolts shall be accurately set by template while the concrete is in a plastic state. Uniform bearing under base plates and sill members shall be provided using a nonshrinking grout. Separate leveling plates under column base plates shall not be used. Members shall be accurately spaced to assure proper fitting of panels. As erection progresses, the work shall be securely fastened to resist the dead load and wind and erection stresses. Supports for electric overhead traveling cranes shall be positioned and aligned in accordance with MHI CMAA 70.

3.1.2 Siding Installation

Siding shall be applied with the longitudinal configurations in the vertical position. Accessories shall be fastened into framing members, except as otherwise approved. Closure strips shall be provided as indicated and where necessary to provide weathertight construction. Fastener and fastener spacing shall be in accordance with manufacture design.

CONTRACTOR'S FIVE (5) YEAR NO PENAL SUM WARRANTY
FOR
METAL BUILDING SYSTEM
(continued)

THE METAL BUILDING SYSTEM INSTALLED ON THE ABOVE NAMED BUILDING IS WARRANTED BY [_____] FOR A PERIOD OF FIVE (5) YEARS AGAINST WORKMANSHIP AND MATERIAL DEFICIENCIES, WIND DAMAGE AND STRUCTURAL FAILURE WITHIN PROJECT SPECIFIED DESIGN LOADS, AND LEAKAGE. THE METAL BUILDING SYSTEM COVERED UNDER THIS WARRANTY SHALL INCLUDE, BUT SHALL NOT BE LIMITED TO, THE FOLLOWING: FRAMING AND STRUCTURAL MEMBERS, ROOFING AND SIDING PANELS AND SEAMS, INTERIOR OR EXTERIOR GUTTERS AND DOWNSPOUTS, ACCESSORIES, TRIM, FLASHINGS AND MISCELLANEOUS BUILDING CLOSURE ITEMS SUCH AS DOORS AND WINDOWS (WHEN FURNISHED BY THE MANUFACTURER), CONNECTORS, COMPONENTS, AND FASTENERS, AND OTHER SYSTEM COMPONENTS AND ASSEMBLIES INSTALLED TO PROVIDE A WEATHERTIGHT SYSTEM; AND ITEMS SPECIFIED IN OTHER SECTIONS OF THESE SPECIFICATIONS THAT BECOME PART OF THE METAL BUILDING SYSTEM. ALL MATERIAL AND WORKMANSHIP DEFICIENCIES, SYSTEM DETERIORATION CAUSED BY EXPOSURE TO THE ELEMENTS AND/OR INADEQUATE RESISTANCE TO SPECIFIED SERVICE DESIGN LOADS, WATER LEAKS AND WIND UPLIFT DAMAGE SHALL BE REPAIRED AS APPROVED BY THE CONTRACTING OFFICER

ALL MATERIAL DEFICIENCIES, WIND DAMAGE, STRUCTURAL FAILURE AND LEAKAGE ASSOCIATED WITH THE METAL BUILDING SYSTEM COVERED UNDER THIS WARRANTY SHALL BE REPAIRED AS APPROVED BY THE CONTRACTING OFFICER. THIS WARRANTY SHALL COVER THE ENTIRE COST OF REPAIR OR REPLACEMENT, INCLUDING ALL MATERIAL, LABOR, AND RELATED MARKUPS. THE ABOVE REFERENCED WARRANTY COMMENCED ON THE DATE OF FINAL ACCEPTANCE ON [_____] AND WILL REMAIN IN EFFECT FOR STATED DURATION FROM THIS DATE.

SIGNED, DATED, AND NOTARIZED (BY COMPANY PRESIDENT)

_____

(Company President) (Date)

CONTRACTOR'S FIVE (5) YEAR NO PENAL SUM WARRANTY
FOR
METAL BUILDING SYSTEM
(continued)

THE CONTRACTOR SHALL SUPPLEMENT THIS WARRANTY WITH WRITTEN WARRANTIES FROM THE MANUFACTURER AND/OR INSTALLER OF THE METAL BUILDING SYSTEM, WHICH SHALL BE SUBMITTED ALONG WITH THE CONTRACTOR'S WARRANTY. HOWEVER, THE CONTRACTOR WILL BE ULTIMATELY RESPONSIBLE FOR THIS WARRANTY AS OUTLINED IN THE SPECIFICATIONS AND AS INDICATED IN THIS WARRANTY.

EXCLUSIONS FROM COVERAGE

1. NATURAL DISASTERS, ACTS OF GOD (LIGHTNING, FIRE, EXPLOSIONS, SUSTAINED WIND FORCES IN EXCESS OF THE DESIGN CRITERIA, EARTHQUAKES, AND HAIL).

2. ACTS OF NEGLIGENCE OR ABUSE OR MISUSE BY GOVERNMENT OR OTHER PERSONNEL, INCLUDING ACCIDENTS, VANDALISM, CIVIL DISOBEDIENCE, WAR, OR DAMAGE CAUSED BY FALLING OBJECTS.

3. DAMAGE BY STRUCTURAL FAILURE, SETTLEMENT, MOVEMENT, DISTORTION, WARPAGE, OR DISPLACEMENT OF THE BUILDING STRUCTURE OR ALTERATIONS MADE TO THE BUILDING.

4. CORROSION CAUSED BY EXPOSURE TO CORROSIVE CHEMICALS, ASH OR FUMES GENERATED OR RELEASED INSIDE OR OUTSIDE THE BUILDING FROM CHEMICAL PLANTS, FOUNDRIES, PLATING WORKS, KILNS, FERTILIZER FACTORIES, PAPER PLANTS, AND THE LIKE.

5. FAILURE OF ANY PART OF THE BUILDING SYSTEM DUE TO ACTIONS BY THE OWNER WHICH INHIBIT FREE DRAINAGE FROM THE ROOF, AND GUTTERS AND DOWNSPOUTS; OR CONDITIONS WHICH CREATE PONDING WATER ON THE ROOF OR AGAINST THE BUILDING SIDING.

6. THIS WARRANTY APPLIES TO THE METAL BUILDING SYSTEM. IT DOES NOT INCLUDE ANY CONSEQUENTIAL DAMAGE TO THE BUILDING INTERIOR OR CONTENTS WHICH IS COVERED BY THE WARRANTY OF CONSTRUCTION CLAUSE INCLUDED IN THIS CONTRACT.

7. THIS WARRANTY CANNOT BE TRANSFERRED TO ANOTHER OWNER WITHOUT WRITTEN CONSENT OF THE CONTRACTOR AND THIS WARRANTY AND THE CONTRACT PROVISIONS WILL TAKE PRECEDENCE OVER ANY CONFLICTS WITH STATE STATUTES. REPORTS OF LEAKS AND BUILDING SYSTEM DEFICIENCIES SHALL BE RESPONDED TO WITHIN 48 HOURS OF RECEIPT OF NOTICE BY TELEPHONE OR IN WRITING FROM EITHER THE OWNER, OR CONTRACTING OFFICER. EMERGENCY REPAIRS, TO PREVENT

FURTHER ROOF LEAKS, SHALL BE INITIATED IMMEDIATELY; A WRITTEN PLAN SHALL BE SUBMITTED FOR APPROVAL TO REPAIR OR REPLACE THIS SSSMR SYSTEM WITHIN SEVEN CALENDAR DAYS. ACTUAL WORK FOR PERMANENT REPAIRS OR REPLACEMENT SHALL BE STARTED WITHIN 30 DAYS AFTER RECEIPT OF NOTICE, AND COMPLETED WITHIN A REASONABLE TIME FRAME. IF THE CONTRACTOR FAILS TO ADEQUATELY RESPOND TO THE WARRANTY PROVISIONS, AS STATED

CONTRACTOR'S FIVE (5) YEAR NO PENAL SUM WARRANTY
FOR
METAL BUILDING SYSTEM
(Exclusions from Coverage Continued)

IN THE CONTRACT AND AS CONTAINED HEREIN, THE CONTRACTING OFFICER MAY HAVE THE METAL BUILDING SYSTEM REPLACED OR REPAIRED BY OTHERS AND CHARGE THE COST TO THE CONTRACTOR. IN THE EVENT THE CONTRACTOR DISPUTES THE EXISTENCE OF A WARRANTABLE DEFECT, THE CONTRACTOR MAY CHALLENGE THE OWNER'S DEMAND FOR REPAIRS AND/OR REPLACEMENT DIRECTED BY THE OWNER OR CONTRACTING OFFICER EITHER BY REQUESTING A CONTRACTING OFFICER'S DECISION, UNDER THE CONTRACT DISPUTES ACT, OR BY REQUESTING THAT AN ARBITRATOR RESOLVE THE ISSUE. THE REQUEST FOR AN ARBITRATOR MUST BE MADE WITHIN 48 HOURS OF BEING NOTIFIED OF THE DISPUTED DEFECTS. UPON BEING INVOKED THE PARTIES SHALL, WITHIN 10 DAYS JOINTLY REQUEST A LIST OF FIVE (5) ARBITRATORS FROM THE FEDERAL MEDIATION AND CONCILIATION SERVICE. THE PARTIES SHALL CONFER WITHIN 10 DAYS AFTER RECEIPT OF THE LIST TO SEEK AGREEMENT ON AN ARBITRATOR. IF THE PARTIES CANNOT AGREE ON AN ARBITRATOR, THE CONTRACTING OFFICER AND THE PRESIDENT OF THE CONTRACTOR'S COMPANY WILL STRIKE ONE (1) NAME FROM THE LIST ALTERNATIVELY UNTIL ONE NAME REMAINS. THE REMAINING PERSON SHALL BE THE DULY SELECTED ARBITRATOR. THE COSTS OF THE ARBITRATION, INCLUDING THE ARBITRATOR'S FEE AND EXPENSES, COURT REPORTER, COURTROOM OR SITE SELECTED ETC., SHALL BE BORNE EQUALLY BETWEEN THE PARTIES. EITHER PARTY DESIRING A COPY OF THE TRANSCRIPT SHALL PAY FOR THE TRANSCRIPT. A HEARING WILL BE HELD AS SOON AS THE PARTIES CAN MUTUALLY AGREE. A WRITTEN ARBITRATOR'S DECISION WILL BE REQUESTED NOT LATER THAN 30 DAYS FOLLOWING THE HEARING. THE DECISION OF THE ARBITRATOR WILL NOT BE BINDING; HOWEVER, IT WILL BE ADMISSIBLE IN ANY SUBSEQUENT APPEAL UNDER THE CONTRACT DISPUTES ACT. A FRAMED COPY OF THIS WARRANTY SHALL BE POSTED IN THE MECHANICAL ROOM OR OTHER APPROVED LOCATION DURING THE ENTIRE WARRANTY PERIOD.

END OF SECTION

SECTION 13202

FUEL STORAGE SYSTEMS

PART 1 GENERAL

1.1 REFERENCES

The publications listed below form a part of this specification to the extent referenced. The publications are referred to in the text by basic designation only.

AMERICAN PETROLEUM INSTITUTE (API)

API Bull 1529	(1989; Errata June 1990) Aviation Fueling Hose
API Publ 1581	(1992) Specifications and Qualification Procedures for Aviation Jet Fuel Filter/Separators
API RP 1110	(1991) Pressure Testing of Liquid Petroleum Pipelines
API Spec 5L	(1992) Line Pipe
API Spec 6D	(1991; Supple 1) Pipeline Valves (Gate, Plug, Ball, and Check Valves)
API Spec 6FA	(1984; R 1990; Supple 1) Fire Test for Valves
API Std 594	(1991) Wafer and Wafer-Lug Check Valves
API Std 610	(1989) Centrifugal Pumps for General Refining Service

AMERICAN SOCIETY FOR TESTING AND MATERIALS (ASTM)

ASTM A 27	(1991) Steel Castings, Carbon, for General Application
ASTM A 36	(1991) Structural Steel
ASTM A 53	(1990b) Pipe, Steel, Black and Hot-Dipped, Zinc-Coated Welded and Seamless
ASTM A 167	(1992b) Stainless and Heat-Resisting Chromium-Nickel Steel Plate, Sheet, and Strip
ASTM A 181	(1990) Forgings, Carbon Steel, for General-Purpose Piping

ASTM A 182	(1992a) Forged or Rolled Alloy-Steel Pipe Flanges, Forged Fittings, and Valves and Parts for High-Temperature Service
ASTM A 193	(1992) Alloy-Steel and Stainless Steel Bolting Materials for High-Temperature Service
ASTM A 194	(1992a) Carbon and Alloy Steel Nuts for Bolts for High-Pressure and High-Temperature Service
ASTM A 216	(1989) Steel Castings, Carbon Suitable for Fusion Welding, for High Temperature Service
ASTM A 234	(1992a) Piping Fittings of Wrought Carbon Steel and Alloy Steel for Moderate and Elevated Temperatures
ASTM A 276	(1991a) Stainless and Heat-Resisting Steel Bars and Shapes
ASTM A 307	(1992a) Carbon Steel Bolts and Studs, 60,000 PSI Tensile Strength
ASTM A 312	(1992a) Seamless and Welded Austenitic Stainless Steel Pipes
ASTM A 356	(1992) Steel Castings, Carbon, Low Alloy, and Stainless Steel Heavy-Walled Castings for Steam Turbines
ASTM A 358	(1992) Electric-Fusion-Welded Austenitic Chromium-Nickel Alloy Steel Pipe for High-Temperature Service
ASTM A 403	(1991) Wrought Austenitic Stainless Steel Piping Fittings
ASTM A 733	(1989) Welded and Seamless Carbon Steel and Austenitic Stainless Steel Pipe Nipples
ASTM A 743	(1992a) Castings, Iron-Chromium, Iron-Chromium-Nickel, Corrosion Resistant,
ASTM B 26	(1992a) Aluminum-Alloy Sand Castings
ASTM B 241	(1992a) Aluminum and Aluminum-Alloy Seamless Pipe and Seamless Extruded Tube

ASTM B 345	(1992a) Aluminum and Aluminum-Alloy Seamless Pipe and Seamless Extruded Tube for Gas and Oil Transmission and Distribution Piping Systems
ASTM B 687	(1988) Brass, Copper, and Chromium-Plated Pipe Nipples
ASTM C 33	(1992a) Concrete Aggregates
ASTM D 229	(1991) Rigid Sheet and Plate Materials Used for Electrical Insulation
ASTM D 1751	(1983; R 1991) Preformed Expansion Joint Filler for Concrete Paving and Structural Construction (Nonextruding and Resilient Bituminous Types)
ASTM D 1752	(1984; R 1992) Preformed Sponge Rubber and Cork Expansion Joint Fillers for Concrete Paving and Structural Construction
ASTM F 436	(1992) Hardened Steel Washers

AMERICAN SOCIETY OF CIVIL ENGINEERS (ASCE)

ASCE 7	(1988) Minimum Design Loads for Buildings and Other Structures

AMERICAN SOCIETY OF MECHANICAL ENGINEERS (ASME)

ASME B16.3	(1985) Malleable Iron Threaded Fittings, Classes 150 and 300
ASME B16.5	(1988; Errata; B16.5a) Pipe Flanges and Flanged Fittings
ASME B16.9	(1993) Factory-Made Wrought Steel Buttwelding Fittings
ASME B16.11	(1991) Forged Fittings, Socket-Welding and Threaded
ASME B16.21	(1992) Nonmetallic Flat Gaskets for Pipe Flanges
ASME B16.34	(1988) Valves - Flanged, Threaded, and Welding End
ASME B31.3	(1993) Chemical Plant and Petroleum Refinery Piping

ASME B40.1	(1991) Gauges - Pressure Indicating Dial Type - Elastic Element

AMERICAN WELDING SOCIETY (AWS)

AWS D1.1	(1994) Structural Welding Code - Steel
AWS A5.1	(1991) Carbon Steel Electrodes for Shielded Metal Arc Welding
AWS A5.4	(1992) Stainless Steel Electrodes for Shielded Metal Arc Welding
AWS A5.10	(1992) Aluminum and Aluminum Alloy Bare Welding Rods and Electrodes

FEDERAL SPECIFICATIONS (FS)

FS L-C-530	(Rev C) Coating, Pipe, Thermoplastic Resin
FS L-T-1512	(Rev A; Reinstatement Notice) Tape, Pressure Sensitive Adhesive, Pipe Wrapping
FS RR-F-621	(Rev E) Frames, Covers, Gratings, Steps, Sump and Catch Basin, Manhole
FS VV-F-800	(Rev D; Am 2) Fuel Oil, Diesel
FS WW-U-531	(Rev F) Unions, Pipe, Steel or Malleable Iron: Threaded Connection, 150 Lb., 250 Lb. and 300 Lb. WSP

INTERNATIONAL CONFERENCE OF BUILDING OFFICIALS (ICBO)

ICBO-01	(1988; Supple 1990) Uniform Building Code

MANUFACTURERS STANDARDIZATION SOCIETY OF THE VALVE AND FITTINGS INDUSTRY (MSS)

MSS SP-58	(1988) Pipe Hangers and Supports - Materials, Design and Manufacture
MSS SP-69	(1991) Pipe Hangers and Supports - Selection and Application

MILITARY SPECIFICATIONS (MS)

MS MIL-C-4556	(Rev E) Coating Kit, Epoxy, for Interior of Steel Fuel Tanks

MS MIL-M-28519	(Rev A) Meter, Volumetric, Positive Displacement, Liquid, Aircraft Fuel, 600 gpm
MS MIL-M-81380	(Rev C) Monitor, Contamination, Aviation Fuel Dispensing System
MS MIL-N-5877	(Rev E) Nozzle, Pressure Fuel Servicing, Locking, Type D-1, D-1R, D-2, and D-2R, Nominal 2-1/2 Inch Diameter
MS MIL-P-29206	(Rev A; Am 2) Pipe and Pipe Fittings, Glass Fiber Reinforced Plastic, for Liquid Petroleum Lines
MS MIL-R-7575	(Rev C; Am 2; Notice 1) Resin, Polyester, Low-Pressure Laminating
MS MIL-S-13789	(Rev D) Strainers, Sediment, Pipeline, Basket Type
MS MIL-T-83133	(Rev D) Turbine Fuel, Aviation, Kerosene Types, NATO F-34 (JP-8) and NATO F-35
MS MIL-Y-1140	(Rev H; Am 1) Yarn, Cord, Sleeving, Cloth, and Tape-Glass

MILITARY STANDARDS (MIL-STD)

MIL-STD 271	(Rev F; Notice 1) Requirements for Nondestructive Testing Methods

NATIONAL ASSOCIATION OF CORROSION ENGINEERS (NACE)

NACE RP0274	(1974) High Voltage Electrical Inspection of Pipeline Coatings Prior to Installation

NATIONAL ELECTRICAL MANUFACTURERS ASSOCIATION (NEMA)

NEMA 250	(1991) Enclosures for Electrical Equipment (1000 Volts maximum)
NEMA MG 1	(1993) Motors and Generators

NATIONAL FIRE PROTECTION ASSOCIATION (NFPA)

NFPA 30	(1993) Flammable and Combustible Liquids
NFPA 70	(1993) National Electrical Code

SOCIETY OF AUTOMOTIVE ENGINEERS (SAE)

SAE AMS 3275	(1989) Acrylonitrile Butadiene Rubber Sheet (NBS) Non-Asbestos Fiber, Fuel and Oil Resistant

STEEL STRUCTURES PAINTING COUNCIL (SSPC)

SSPC SP 5	(1991) White Metal Blast Cleaning
SSPC SP 6	(1991) Commercial Blast Cleaning

STEEL TANK INSTITUTE (STI)

UNDERWRITERS LABORATORIES (UL)

UL 142	(1993) Steel Aboveground Tanks for Flammable and Combustible Liquids
UL 567	(1992) Pipe Connectors for Flammable and Combustible Liquids and LP-Gas
UL 842	(1992) Valves for Flammable Fluids

1.2 SYSTEM DESCRIPTION

This specification section provides the requirements for a fuel storage system. The completed installation shall conform to the applicable requirements of NFPA 30 and NFPA 30A as applicable.

1.3 SUBMITTALS

Government approval is required for submittals with a "GA" designation; submittals having an "FIO" designation are for information only. The following shall be submitted in accordance with Section 01300 SUBMITTALS:

Data

Fueling System; GA

Manufacturer's standard catalog data, prior to the purchase or installation of the particular component, highlighted to show brand name, model number, size, options, performance charts and curves, etc. in sufficient detail to demonstrate compliance with contract requirements on all parts and equipment including storage tanks, storage tank components, accessories, piping components, and monitoring systems. Permitting; GA. Six copies of all required Federal, state, and local permits.

Registration; GA.

Required tank registration forms, 30 days after contract award, in order for the Contracting Officer to submit the forms to the regulatory agency.

Spare Parts Data; GA.

Spare parts data for each different item of equipment specified, after approval of detail drawings and not later than 3 months prior to the date of beneficial occupancy. The data shall include a complete list of parts and supplies, with current unit prices and source of supply, a recommended spare parts list for 1 year of operation, and a list of the parts recommended by the manufacturer to be replaced on a routine basis.

Drawings

Fueling System; GA.

Detail drawings including a complete list of equipment and materials. Detail drawings shall contain:

(1) Complete piping and wiring drawings and schematic diagrams of the overall system.
(2) Equipment layout and anchorage.
(3) Clearances required for maintenance and operation.
(4) Any other details required to demonstrate that the system has been coordinated and will properly function as a unit.

Monitoring Systems; GA.

Detail drawings of the entire system including a complete list of equipment and materials. Drawings shall contain:

(1) An overview drawing which details the leak detection system operation.
(2) An overview drawing which details the liquid level and setpoint monitoring.
(3) Wiring schematics for each part of the fueling system. The schematics shall indicate each operating device along with their normal ranges of operating values (including pressures, temperatures, voltages, currents, speeds, etc.).
(4) Single line diagrams of the system.
(5) Panel layout along with panel mounting and support details.

Instructions

Installation; FIO.

The manufacturer's installation instructions and procedures for the storage tanks, storage tank components, accessories, piping components, and monitoring systems.

Framed Instructions; FIO.

Framed instructions for posting, at least 2 weeks prior to construction completion.

Monitoring Systems; GA.

System diagrams for posting, at least 2 weeks prior to construction completion, which include distance markings such that alarm indications can be correlated to leak location in plan view if a cable detection system is used. The diagrams shall include a piping and wiring display map with schematic diagrams from the leak detection system manufacturer. The diagrams shall be framed under glass or laminated plastic and be posted where indicated by the Contracting Officer.

Schedules

Factory Tests; FIO.

A schedule, at least 2 weeks prior to the factory tests, which identifies the date, time, and location for the tests.

Tests; FIO.

A letter, at least 10 working days in advance of each test, advising the Contracting Officer of the test. Individual letters shall be provided for the below grade storage tank tests, the piping tests, the system performance tests, the high level alarm test, and the system leak test.

Demonstrations; GA.

A letter, at least 14 working days prior to the proposed training date, scheduling a proposed date for conducting the onsite training.

Statements

Experience; GA.

A letter listing prior projects, the date of construction, a point of contact for each prior project, the scope of work of each prior project, and a detailed list of work performed. The letter shall also provide evidence of prior manufacturer's training, state licensing, etc.

Welding; GA.

A letter listing the qualifying procedures for each welder. The letter shall include supporting data such as test procedures used, what was tested to, etc. and a list of the names of all qualified welders and their identification symbols.

Radiographic Piping Tests; GA.

A letter, prior to performing any radiographic pipe tests, identifying the commercial or testing laboratory responsible for performing the test. The letter shall define the laboratory's qualifications and previously related job experience.

Verification of Dimensions; FIO.

A letter stating the date the site was visited and a listing of all discrepancies found.

Fuel Supply; FIO.

A letter, at least 120 days prior to fuel delivery, stating the amount of fuel required for testing, flushing, cleaning, or startup of the system. The letter shall define the required dates of each fuel delivery necessary.

Exterior Coating for Below Grade Steel Piping; FIO.

Certification, prior to performing the exterior coating tests, from the tester manufacturer of the electric holiday detector's latest calibration date and crest voltage testing.

Reports

Factory Tests; GA.

Six copies of the report in bound letter-size booklets. Report shall certify compliance with the testing and qualification procedures defined in API Publ 1581. The report shall contain complete records of the tests including data sheets, performance curves, chronological test records, photographs, sample calculations, test procedures, and a description of the test apparatus. The report shall include color photographs of the sample elements before and after tests.

Tests; GA.

Six copies of each test containing the information described below in bound letter-size booklets. Individual reports shall be provided for the storage tank tests, the piping tests, the system performance tests, the high level alarm test, and the system leak test. Drawings shall be folded blue lines, with the title block visible.

(1) The date the tests were performed.
(2) A list of equipment used, with calibration certifications.
(3) A copy of measurements taken.
(4) The parameters to be verified.
(5) The condition specified for the parameter.
(6) The inspection results, signed, dated, and certified by the installer. The certification shall state that required procedures were accomplished, that the procedures were conducted in compliance with the plans and specifications.
(7) A description of adjustments performed.

Operation and Maintenance Manuals

Operation Manuals; GA.

Six complete copies, at least 2 weeks prior to the demonstrations, of operation manuals in bound letter-size booklets listing step-by-step procedures required for system startup, operation, and shutdown. The manuals shall include the manufacturer's name, model number, service manual, a brief description of each piece of equipment, and the basic operating features of each piece of equipment. The manuals shall include procedures necessary for annual tightness testing of the storage tanks and secondary containment piping.

Maintenance Manuals; GA.

Six complete copies, at least 2 weeks prior to the demonstrations, of maintenance manuals in bound letter-size booklets listing routine maintenance procedures, possible breakdowns and repairs, and a trouble shooting guide. The manuals shall include piping, equipment layouts, and simplified wiring and control diagrams of the system as installed.

1.4 QUALIFICATIONS

1.4.1 Experience

Each installation Contractor shall have successfully completed at least 3 projects of the same scope and the same size or larger within the last 6 years. Each installation Contractor shall demonstrate specific installation experience in regard to the specific system installation to be performed. Each installation Contractor shall have taken, if applicable, manufacturer's training courses on the installation of piping, leak detection, and tank management systems and meet the licensing requirements in the state.

1.4.2 Welding

Welding shall be in accordance with qualifying procedures using performance qualified welders and welding operators. Welding tests shall be performed at the work site. Procedures and welders shall be qualified in accordance with ASME BPV IX. Each welder or welding operator shall apply his assigned symbol near each weld he makes as a permanent record. Structural members shall be welded in accordance with AWS D1.1.

1.4.3 Radiographic Piping Tests

Radiographic piping inspectors shall have qualifications in accordance with MIL-STD 271 or ASTM E 94.

1.5 REGULATORY REQUIREMENTS

The design, fabrication, and installation of the entire fueling system shall be in accordance with this specification as well as meet all Federal, state, and local code requirements.

1.5.1 Permitting

Contractor shall obtain necessary permits in conjunction with the installation of below grade storage tanks as required by federal, state, or local authority.

1.5.2 Registration

Contractor shall obtain and complete all required tank registration forms required by federal, state, and local authorities.

1.6 DELIVERY, STORAGE, AND HANDLING

Stored items shall be protected from the weather and contamination. Proper protection and care of material before, during, and after installation shall be the Contractor's responsibility. Any materials found to be damaged shall be replaced at the Contractor's expense. During installation, piping and similar openings shall be capped to keep out dirt and other foreign matter.

1.7 PROJECT/SITE CONDITIONS

1.7.1 Verification of Dimensions

The Contractor shall become familiar with all details of the work, verify dimensions in the field, and advise the Contracting Officer of any discrepancy before performing any work.

1.7.2 Fuel Supply

Fuel required for the flushing, cleaning, and testing of materials, equipment, piping, meters, pumps, instruments, etc. as specified in this section shall be provided by the Contracting Officer. Fuel will be provided by tank trucks. The Contracting Officer will furnish the tank trucks, operators, equipment, and services required for the tank truck operations. The Contractor shall provide the labor, equipment, appliances, and materials required for the flushing, cleaning, and testing operations. Systems shall not be flushed, cleaned, or tested with any fuel or liquid not intended for final system operation. Fuel used in the system shall remain the property of the Government. Fuel shortages not attributable to normal handling losses shall be reimbursed to the Government.

PART 2 PRODUCTS

2.1 STANDARD PRODUCTS

Materials and equipment shall be standard products of a manufacturer regularly engaged in the manufacturing of such products, which are of a similar material, design and workmanship. The standard products shall have been in satisfactory commercial or industrial use for 2 years prior to bid opening. The 2 year use shall include applications of equipment and materials under similar circumstances and of similar size. The 2 years experience shall be satisfactorily completed by a product which has been sold or is offered for sale on the commercial market through advertisements, manufacturer's catalogs, or brochures. Products having less than a 2 year field service record will be acceptable if a certified record of satisfactory field operation, for not less than 6,000 hours exclusive of the manufacturer's factory tests, can be shown. Products shall be supported by a service organization. System components shall be environmentally suitable for the indicated locations. The completed installation shall conform to the applicable requirements of NFPA 30.

2.2 NAMEPLATES

Storage tanks, storage tank components, accessories, valves, and leak detection systems within this specification shall have an attached nameplate to list the manufacturer's name, address, component type or style, model or serial number, catalog number, capacity or size, and the system which is controlled. Plates shall be durable and legible throughout equipment life and made of anodized aluminum, stainless steel, or copper. Plates shall be fixed in prominent locations with nonferrous screws or bolts.

2.3 ELECTRICAL WORK

Electrical equipment, motors, and wiring shall be in accordance with Section 16415 ELECTRICAL WORK, INTERIOR. Each motor shall conform to NEMA MG 1 and be of sufficient size to drive the equipment at the specified capacity without exceeding the nameplate rating of the motor when operating at proper electrical system voltage. Electrical characteristics and enclosure type shall be as shown, and unless otherwise indicated, motors of 373 W (1 horsepower) and above with open, dripproof, or totally enclosed fan cooled enclosures, shall be high efficiency type. Motors shall be continuous duty with the enclosure specified. Switches and devices necessary for controlling the electrical equipment shall be provided. Pumps shall be completely wired and ready for connection to the power circuit. Wiring, equipment, and fittings shall be explosion-proof in conformance with the applicable requirements of UL 674, UL 698, and UL 886 for Class I, Division l, Group C and D hazardous locations. Electrical equipment shall conform to the requirements of NFPA 70. Electrical equipment shall have a maximum temperature rating in accordance with NFPA 70, Article 500-3.

2.4 MATERIALS

2.4.1 Fuels

Galvanized materials (zinc coated) shall not be allowed direct contact with any type fuel. Materials which come in contact with aviation fuel shall be stainless steel, aluminum, or fiberglass. No zinc coated metals, brass, bronze, or other copper bearing alloys shall be used in contact with aviation fuel. Fuels as required by this specification shall be in accordance with the following:

2.4.1.1 Motor Gasoline (Mogas)

Mogas shall be in accordance with MS MIL-G-3056.

2.4.1.2 Diesel

Diesel shall be in accordance with FS VV-F-800.

2.4.1.3 JP-8

JP-8 fuel shall be in accordance with MS MIL-T-83133.

2.4.1.4 Kerosene

Kerosene shall be in accordance with ASTM-D3699.

2.4.2 Gaskets

Gaskets shall be factory cut from 1 piece of material and be resistant to the effects of the fuel to be handled.

2.4.2.1 Nitrile Butadiene (Buna-N)

Buna-N material shall be in accordance with SAE AMS 3275.

2.4.2.2 Acrylonitrile Butadiene Rubber (NBR)

NBR material shall conform to SAE AMS 3275.

2.4.3 Electrically Isolating Gaskets for Flanges

Flanges shall be provided with an electrical insulating material of 1,000 ohms minimum resistance conforming to ASTM D 229. The material shall be resistant to the effects of the type of fuel to be handled. Gaskets shall be full face and be provided between flanges. Flanges shall have full surface 0.03 inch thick, spiral-wound mylar insulating sleeves between the bolts and the holes in the flanges. Bolts may have reduced shanks of a diameter not less than the diameter at the root of the threads. High-strength 1/8 inch thick phenolic insulating washers shall be provided next to the flanges with flat circular stainless steel washers over the insulating washers. Bolts shall be long enough to compensate for the insulating gaskets and stainless steel washers.

2.4.4 Electrically Isolating Union

Union shall be provided with an electrical insulating material of 1,000 ohms minimum resistance conforming to ASTM D 229. The material shall be resistant to the effects of the type of fuel to be handled.

2.4.5 Concrete Anchor Bolts

Concrete anchor bolts shall be group II, Type A, class 2 in accordance with ASTM A 307.

2.4.6 Bolts

Bolts shall be in accordance with ASTM A 193, Grade B8.

2.4.7 Nuts

Nuts shall be in accordance with ASTM A 194, Grade 8.

2.4.8 Washers

Washers shall be in accordance with ASTM F 436, flat circular stainless steel. Washers shall be provided under each bolt head and nut.

2.5 STORAGE TANKS

2.5.1 Not Used

2.5.2 Above Grade Storage Tank (0 - 24,000 Liters)

Tank shall be double-wall steel in conformance with UL 142 and NFPA 30 complete with suitable foundation. Tank shall be designed and manufactured for above grade installation. Tank shall be designed and manufactured for horizontal installation. Tank shall have an interior striker/impact plate attached directly under each tank opening. The striker/impact plate shall be a minimum of 1/4 inch in thickness, be larger in size than the tank manway, and fit the curvature of the tank bottom. Tank shall have a 2 hour fire rating in accordance with NFPA 30. Insulation may be concrete encased type or metal secondary containment with high temperature insulation. Emergency vents shall be in accordance with applicable UL-142 specifications. Flame arrester shall be provided.

2.6 PIPE

Piping routinely carrying heating oil shall be carbon steel, interior coated carbon steel, aluminum, fiberglass, or copper. Secondary containment pipe, trenches, or sleeves shall be used for underground pipe. Piping carrying fuel within concrete trenches or buried ductile iron sleeves shall be readily accessible for inspection; as such the piping is considered aboveground. The sealed concrete trench itself comprises the secondary containment. Liquid shall be directed via gravity to collect at the low points indicated. Joints in the precast secondary containment trench shall be sealed using the manufacturer's standard method to prevent liquid leakage into or out of the trench and sumps. Joints between precast trenches and pipe sleeves, precast sumps, or other components that make up the secondary containment system shall be sealed in accordance with manufacturer's recommendations using a product compatible with diesel fuel.

2.6.1 Steel Pipe

Carbon steel pipe shall be in accordance with ASTM A 53, Type E or S, Grade B, or API Spec 5L, seamless or electric-weld, Grade B. Pipe smaller than 65 mm (2-1/2 inches) shall be Schedule 80. ASTM A 53 pipe 65 mm (2-1/2 inches) and larger shall be Schedule 40. API Spec 5L pipe 65 mm (2-1/2 inches) and larger shall be Schedule 40S.

2.6.1.1 Connections for Steel Pipe

Connections for pipe or fittings smaller than 65 mm (2-1/2 inches) shall be forged, socket weld type, 2000 W.O.G. conforming to ASTM A 182 and ASME B16.11. Connections for pipe or fittings 65 mm (2-1/2 inches) and larger shall be butt weld type conforming to ASTM A 234, Grade WPB and ASME B16.9 of the same wall thickness as the adjoining pipe. Piping in inaccessible locations, such as product piping inside of piping sleeves that drain to the pipe trench, shall be welded. No threaded fittings shall be used for product piping in inaccessible locations, including locations inside the piping trenches. Fittings for leak detection probes serving the piping system (if provided in lieu of a sleeved pipe system) shall accommodate the primary fuel pipe trench and leak detection cables, and any additional equipment recommended by the leak detector manufacturer.

2.6.1.2 Welding Electrodes

Welding electrodes shall be E70XX low hydrogen type conforming to AWS A5.1 or AWS A5.4.

2.6.1.3 Threaded Connections

Threaded connections shall only be used on piping 50 mm (2 inches) in nominal size or smaller and only where indicated. Connections shall be in accordance with ASME B16.3, Class 150. Threaded connections shall be sealed tightly with a thread sealant or lubricant which is compatible with the fuel to be handled.

2.6.2 Fiberglass Reinforced Plastic (FRP) Pipe

2.6.2.1 Pipe

Pipe shall be compatible with the fuel to be handled and be in accordance with MS MIL-P-29206. Pipe shall be compatible with the fluid being transported. Use of FPR piping is limited to buried service only and at pressures not exceeding that marked on the pipe.

2.6.2.2 Fittings

Fittings and joining materials shall be in accordance with MS MIL-P-29206. No threaded fittings shall be used for product piping in inaccessible locations. Fittings for secondary exterior pipe of double-wall piping system shall accommodate the primary inner pipe and any additional equipment required, such as leak detection cables. Fittings and joining materials shall be compatible with the fuel to be handled.

2.6.3 Aluminum Pipe

Aluminum piping shall be in accordance with ASTM B 241 or ASTM B 345, alloy 6061-T6, Schedule 40 for pipe sizes 50 mm (2 inches) through 300 mm (12 inches); Schedule 80 for pipe sizes 50 mm (2 inches) and smaller.

2.6.3.1 Connections for Aluminum Pipe

Socket welded connections shall be in accordance with ASME B16.11, except aluminum shall be alloy 5083-H112, alloy 6061-T6, or alloy 356-T6. Buttwelded connections shall be in accordance with ASME B16.9, except aluminum shall be in accordance with ASTM B 241, alloy 6061-T6, of the same weight as the pipe. Piping in inaccessible locations, such as product piping inside of piping sleeves that drain to the pipe trench, shall be welded.

2.6.3.2 Aluminum Welding Process and Electrodes

The welding process for aluminum piping shall be a gas tungsten arc or gas metal arc process in accordance with ASME B31.3. Welding electrodes shall be ER5356 conforming to AWS A5.10.

2.8 PIPING COMPONENTS

2.8.1 Valves

2.8.1.1 Manual Valves

Portions of a valve coming in contact with fuel shall be compatible with the fuel to be handled. Valves shall have bodies, bonnets, and covers constructed of stainless steel conforming to ASTM A 743, Type 304 or 316; or aluminum alloy conforming to ASTM B 26, Type 3003, 6061-T6, or 356-T6. Each valve shall have stainless steel stem and trim. Valves shall be suitable for a working pressure of 275 psig at 100

degrees F with a weatherproof housing and be provided with flanged end connections unless indicated otherwise. Seats, body seals, and stem seals shall be Viton or Buna-N.

2.8.1.2 Gate Valves

Valve shall conform to the fire test requirements of API Spec 6FA. Valve shall be of the flexible wedge disc type, conduit disc type, or double disc type. Valve shall be of the rising stem type with closed yoke, or the non-rising stem type equipped with a device to give positive visual indication of the valve's position.

2.8.1.3 Swing Type Check Valves

Valve shall be swing type conforming to API. Check valves shall be the tilting disc, non-slam type. Discs and seating rings shall be renewable without removing from the line. The disc shall be guided and controlled to contact the entire seating surface.

2.8.1.4 Ball Valves

Valves shall have one piece bodies and have a minimum bore not less than 55 percent of the internal cross sectional area of a pipe of the same nominal diameter. The ball shall be stainless steel. Valve shall be fire tested and qualified in accordance with API Spec 6FA. Valve shall be non-lubricated and operate from fully open to fully closed with 90 degree rotation of the ball.

2.8.2 Miscellaneous Accessories

2.8.2.1 Steel Coupling

Coupling shall be in accordance with API Spec 5L, seamless, extra heavy, wrought steel with recessed ends.

2.8.2.2 Welded Nipple

Nipple shall be in accordance with ASTM A 733 or ASTM B 687 and of the same material as the product piping.

2.8.2.3 Threaded Union

Threaded unions shall only be used on cast steel piping 2 inches in nominal size or smaller and only where indicated. Union shall be in accordance with FS WW-U-531, Class 150.

2.8.2.4 Joint Compound

Joint compounds for any type of piping system shall be resistant to water and suitable for use with fuel containing 40 percent aromatics.

2.8.2.5 Flexible Connections

Connectors shall conform to requirements of UL 567 and be the flexible metal hose, corrugated type with braided wire sheath covering. Connectors shall have close-pitch annular corrugations and be rated for a working pressure of at least 275 psig at 100 degrees F. Connectors shall have a minimum 12-inch live length with flanged end connections. Metal for hose and braided wire sheath shall be stainless steel in accordance with ASTM A 167. Underground pressure piping provided with flexible connectors shall be fitted with flexible boot for secondary containment where indicated or specified. Flex boot shall be compatible with fuel and manufactured for this use.

2.8.2.6 Pipe Hangers and Supports

Hangers and supports shall be of the adjustable type and conform to MSS SP-58 and MSS SP-69, except as modified herein. The finish of rods, nuts, bolts, washers, hangers, and supports shall be hot-dipped galvanized. Nuts, bolts, washers, and screws shall be Type 316 stainless steel when located under any pier. Miscellaneous metal shall be in accordance with ASTM A 36, standard mill finished structural steel shapes, hot-dipped galvanized.

a. Pipe Protection Shields. Shields shall conform to MSS SP-58 and MSS SP-69, Type 40, except material shall be Type 316 stainless steel. Shields shall be provided at each slide type pipe hanger and support.

b. Low Friction Supports. Supports shall have self-lubricating anti-friction bearing elements composed of 100 percent virgin tetrafluoroethylene polymer and reinforcing aggregates, prebonded to appropriate backing steel members. The coefficient of static friction between bearing elements shall be 0.06 from initial installation for both vertical and horizontal loads and deformation shall not exceed 0.002 inch under allowable static loads. Bonds between material and steel shall be heat cured, high temperature epoxy. Design pipe hangers and support elements for the loads applied. Anti-friction material shall be a minimum of 0.09 inch thick. Steel supports shall be hot-dipped galvanized. Units shall be factory designed and manufactured.

2.11 SUPPLEMENTAL COMPONENTS/SERVICES

2.11.1 Earthwork

Excavation and backfilling for tanks and piping shall be as specified in Section 02221 EXCAVATION, TRENCHING, AND BACKFILLING FOR UTILITIES SYSTEMS, except as modified herein. Backfill for steel tanks and pipe, aluminum pipe, and stainless steel pipe shall be pea gravel, crushed stone, or sand.

2.11.1.1 Pea Gravel

Pea gravel shall be between 1/8-inch and 3/4-inch diameter.

2.11.1.2 Crushed Stone

Crushed stone shall be between 1/8 and 1/2 inch in diameter in accordance with ASTM C 33.

2.11.1.3 Sand

Sand shall be fine sand aggregate in accordance with ASTM C 33, washed and thoroughly dried, contain no more than 500 PPM chlorides, contain no more than 500 PPM sulfates, and have a pH greater than 7.

2.11.2 Exterior Coating of Miscellaneous Items

Steel surfaces to be externally coated or painted shall be cleaned to a commercial grade blast cleaning finish in accordance with SSPC SP 6 prior to the application of the coating. Exterior surfaces, other than stainless steel pipe and flexible connectors, which are not otherwise painted and do not require the application of an exterior coating, as well as all items supplied without factory-applied finish paint, not including primer only items, shall be painted as specified in Section 09900 PAINTING, GENERAL.

2.11.3 Identification Markings

Above grade tanks, pipe, equipment, etc. supplied under this section shall have identification markings applied in accordance with Section 09900 PAINTING, GENERAL.

PART 3 EXECUTION

3.1 INSTALLATION

Storage tanks shall be handled with extreme care to prevent damage during placement and shall be installed in accordance with the manufacturer's installation instructions and NFPA 30. The exterior surface of each tank shall be inspected for obvious visual damage prior to and proceeding the placement of each storage tank. Surface damage to a storage tank shall be corrected according manufacturer's requirements before proceeding with the system installation.

3.1.3 Equipment

Equipment shall be properly leveled, aligned, and secured in place in accordance with manufacturer's instructions. Supports shall be provided for equipment, appurtenances, and pipe as required. Floor-mounted pumps shall be provided with mechanical vibration isolators or a vibration isolation foundation. Anchors, bolts, nuts, washers, and screws shall be installed where required for securing the work in place. Sizes, types, and spacings of anchors and bolts not indicated or specified shall be as required for proper installation.

3.1.4 Piping

Piping shall be inspected, tested, and approved before burying, covering, or concealing. Piping shall be installed straight and true to bear evenly on supports. Piping shall be free of traps, shall not be embedded in concrete pavement, and shall drain toward the corresponding storage tank. Any pipe, fittings, or appurtenances found defective after installation shall be replaced. Piping connections to equipment shall be as indicated or as required by the equipment manufacturer. Pipe and accessories shall be handled carefully to assure a sound, undamaged condition. The interior of the pipe shall be thoroughly cleaned of foreign matter and shall be kept clean during installation. The pipe shall not be laid in water or stored outside unprotected when weather conditions are unsuitable. When work is not in progress, open ends of pipe and fittings shall be securely closed so that water, earth, or other substances cannot enter the pipe or fittings. Cutting pipe, when necessary, shall be done without damage to the pipe. Pipe shall be reamed to true internal diameter after cutting to remove burrs. Changes in pipe sizes shall be made through tapered

reducing pipe fittings. Stainless steel pipe shall in no case be welded directly to carbon steel pipe. Cutting of FRP pipe shall be performed with a hacksaw or circular saw. Vent and vapor recovery piping shall be in accordance with NFPA 30. Metallic piping connections to a steel storage tank shall be electrically isolated from the tank. Fuel supply piping from a storage tank shall extend to within 6 inches of the tank's bottom.

3.1.4.1 Above Grade Piping

Pipe sections shall be installed as indicated and be complete prior to performing any piping tests. Vent and vapor recovery piping shall be single-wall steel pipe for above grade installations

3.1.4.2 Below Grade Piping

Below grade piping used for carrying fuel shall be secondary containment piping or a fabricated, straight lenth of suitably sized PVC sleeve, sloped to drain into the mechanical room. Nonmetallic secondary containment pipe shall be installed in accordance with pipe manufacturer's instructions. Below grade piping shall be laid with a minimum pitch of l inch per 50 feet. Horizontal sections of pipe shall be installed with a minimum of 18 inches of backfill between the top of the pipe and the ground surface. The full length of each section of below grade pipe shall rest solidly on the pipe bed. Joints in secondary piping shall not be made until inner pipe is successfully pressure tested.

3.1.6 Field Painting

Painting required for surfaces not otherwise specified, and finish painting of items only primed at the factory, shall be painted and have identification markings applied as specified in Section 09900 PAINTING, GENERAL. Stainless steel and aluminum surfaces shall not be painted. Prior to any painting, surfaces shall be cleaned to remove dust, dirt, rust, oil, and grease.

3.1.7 Framed Instructions

Framed instructions shall include equipment layout, wiring and control diagrams, piping, valves, control sequences, and typed condensed operation instructions. The condensed operation instructions shall include preventative maintenance procedures, methods of checking the system for normal and safe operation, and procedures for safely starting and stopping the system. The framed instructions shall be framed under glass or laminated plastic and be posted where directed by the Contracting Officer. The framed instructions shall be posted before acceptance testing of the system.

3.2 TESTS

3.2.1 Storage Tank

3.2.1.1 Tightness Tests for Above Grade Storage Tanks (0 – 24,000 Liters)

A tightness test shall be performed on each above grade storage tank. The tests shall be performed following the installation of the storage tanks onto the support saddles, but prior to making piping connections. Tests shall be capable of detecting a .38 liter per hour leak rate from any portion of the tank while accounting for effects of thermal expansion or contraction. Gauges used in the tightness tests shall have a scale with a maximum limit of 69 kPa. Each storage tank shall be pressurized with air to 35 kPa and monitored for a drop in pressure over a 2-hour period during which there shall be no drop in pressure in the tank greater than that allowed for pressure variations due to thermal effects. This pressure shall be

maintained and soapsuds or equivalent material applied to the exterior of the tank. While applying the soapsuds, the entire tank shall be visually inspected, including the bottom surfaces, for leaks (bubble formations). Leaks discovered during either the 2-hour waiting period or the soapsuds tests shall be repaired in accordance with manufacturer's instructions. The entire pneumatic test shall be performed again in the event a leak is discovered.

3.2.1.3 Manufacturer's Tests

Following the tank tightness test, each storage tank shall be leak tested in accordance with the manufacturer's written test procedure if the manufacturer's test procedure is different from the tightness tests already performed. Any test failure shall require corrective action and retest.

3.2.2 Piping

3.2.2.1 Exterior Coating for Below Grade Steel Piping

The coating system shall be visually inspected for holes, voids, cracks, and other damage during installation. Damage to the protective coating incurred during transit and handling shall be repaired before installation. Before lowering into the trench, each pipe section shall be tested by an electric holiday detector with impressed current in accordance with NACE RP0274 using a full-ring, spring-type coil electrode. The holiday detector shall be equipped with a bell, buzzer, or other type of audible signal which sounds when a holiday is detected. Holidays in the protective coating shall be repaired immediately upon detection and retested. The holiday detector shall be a type that field adjustments cannot be made. Calibration of the tester shall be performed by an independent testing manufacturer at 6-month intervals or at such time as the crest voltage is questionable. Following installation, but prior to filling the system with fuel, all exterior protective coatings, including field joints, shall be retested with an electric holiday detector as described above. Holidays in the protective coating shall be repaired immediately upon detection and retested. Extreme care shall be taken in lifting the piping to perform the testing procedure. Chains or metal ropes shall not be used in lifting the pipe for testing. Labor, materials, and equipment necessary for conducting the holiday tests shall be furnished by the Contractor.

3.2.2.3 Pneumatic and Hydrostatic Tests

Testing shall comply with the applicable requirements of ASME B31.3, NFPA 30, and the requirements specified herein. Care shall be taken not to exceed pressure rating of various fittings. Hydrostatic testing shall be performed using fuel as the liquid. Water shall not be introduced into the system for testing. To facilitate the pneumatic and hydrostatic tests, various sections of the piping system may be isolated and tested separately. Where such sections terminate at flanged valve points, the line shall be closed by means of blind flanges in lieu of relying on the valve. Tapped flanges shall be provided to allow a direct connection between the piping and the air compressor and/or pressurizing pump. Tapped flanges shall also be used for gauge connections. No taps in the permanent line will be permitted. Gauges shall be subject to testing and approval. In the event leaks are detected, the pipe shall be repaired and the test repeated. Following satisfactory completion of each pneumatic and hydrostatic test, the pressure shall be relieved and the pipe immediately sealed. Provision shall be made to prevent displacement of the piping during testing. Personnel shall be kept clear of the piping during pneumatic testing. Equipment such as pumps, tanks, and meters shall be isolated from the piping system during the testing.

a. Pneumatic Test Procedures for Product and Vent/Vapor Piping: Piping to be installed underground shall not receive field applied covering at the joints or be covered by backfill until the piping has passed the

pneumatic test described herein. A pneumatic test pressure shall be applied in increments. A preliminary 25 psig test shall be applied. The pressure shall be maintained while soapsuds or equivalent materials are applied to the exterior of the piping. While applying the soapsuds, the entire run of piping, including the bottom surfaces, shall be visually inspected for leaks (bubble formations). Leaks discovered shall be repaired in accordance with manufacturer's instructions and retested. Following the preliminary test, the piping shall be tested at a pressure of 50 psig for not less than 2 hours, during which time there shall be no drop in pressure in the pipe greater than that allowed for thermal expansion and contraction. The pressure source shall be disconnected during the final test period. Any leaks revealed by the test shall be repaired and the test repeated.

b. Pneumatic Test Procedures for Exterior Containment Piping: Exterior containment piping shall undergo a minimum pneumatic pressure of 5 psig. Pressure in secondary piping shall be maintained for at least 1 hour while soapsuds or equivalent materials are applied to the exterior of the piping. While applying the soapsuds, the entire run of piping, including the bottom surfaces, shall be visually inspected for leaks (bubble formations). Leaks discovered shall be repaired in accordance with manufacturer's instructions and retested. This testing shall be in compliance with the manufacturer's published installation instructions.

c. Hydrostatic Test Procedures for Product Piping: Upon completion of pneumatic testing and after backfilling, each piping system shall be hydrostatically tested with fuel at not more than 275 psig in accordance with ASME B31.3 and API RP 1110, with no leakage or reduction in gauge pressure for 4 hours. The Contractor shall furnish electricity, instruments, connecting devices, and personnel for the test. Fuel will be furnished by the Government. Defects in work performed shall be corrected at the Contractor's expense, and the test repeated until the work is proven to be in compliance with the testing procedures. Any release of fuel (no matter the size) during testing shall be immediately contained, the pressure on the piping relieved, and the piping drained of fuel. The Contracting Officer shall be notified immediately of a fuel release, the exact location, an estimated quantity of release, and a discussion of the containment measures taken.

3.2.3 System Performance Tests

After all components of the system have been properly adjusted, the system shall be tested to demonstrate that the system meets the performance requirements for which it was designed. The maximum rated capacity of the system shall be tested by using several tank trucks simultaneously, if applicable. The use of tank trucks shall be coordinated with the Contracting Officer prior to testing. If any portion of the system or any piece of equipment fails to pass the tests, the Contractor shall make the necessary repairs or adjustments and the test shall be repeated until satisfactory performance is obtained from the Contracting Officer. The tests shall demonstrate the following:

a. Day tank assemblies perform as designed.

3.3 FLUSHING, CLEANING AND ADJUSTING

Following installation and equipment testing but prior to system performance testing, the following flushing, cleaning, and adjustments shall be performed.

3.3.1 Preparations for Flushing

3.3.1.1 Initial System Cleaning

The interior of each fuel storage tank shall be visually inspected and cleaned free of debris before filling. In the event of entry into a storage tank, the Contractor shall ensure a safe atmosphere exists. Contractor shall remove all preservatives and foreign matter from valves, line strainers, pumps, and other equipment coming in contact with fuel. No fuel will be delivered to the system until the Contractor has satisfactorily completed this initial system cleaning.

3.3.1.2 Protection of Equipment

Temporary 40 mesh cone type strainers shall be installed in the suction line ahead of each fueling pump as well as ahead of each filter/separator. The strainers shall be constructed of the same material as the piping and shall be compatible with the fuel to be handled. The temporary strainers shall remain in place for a minimum of 2 days after system startup, after which time the Contractor shall remove the strainers and prepare the piping as intended for final system operation.

3.3.2 System Flushing

3.3.2.1 Initial Fuel Supply

Following the initial preparations, each storage tank shall be filled to a 25 percent capacity with the proper fuel according to the fueling system's final operational requirements. Following the initial fuel supply, each storage tank's fuel temperature and liquid level shall be measured and recorded. The liquid level shall be measured using a manual tank gauge.

3.3.2.4 Disposal of Initial Fuel Supply

In the event the fuel contained in the piping system at the conclusion of the flushing operation is not considered by the Contracting Officer to be of satisfactory quality for the desired use, the Contractor shall be responsible for pumping out the entire fuel supply from the storage tanks and the piping system. The filter/separator and piping system shall be completely drained to the storage tank. Disposition of the fuel removed from the system shall be the responsibility of the Government.

3.3.3 Cleaning Equipment

Upon completion of flushing operations, permanent strainers shall be removed, cleaned, and reinstalled. If the pressure differential across the filter/separator elements exceeds that recommended by the manufacturer, the elements shall be replaced with the spare set furnished with the unit.

3.3.4 Initial System Adjustments

Following the flushing and cleaning operations, each system component shall be initially adjusted, if necessary, to meet the system's final operational requirements. The Government will deliver enough fuel to the storage tanks to enable the Contractor to make final adjustments to equipment and controls. Flow rates and pressures shall be adjusted as required to meet the indicated requirements. Pumps, control valves, filter separators, etc. shall operate as intended. The sequence of control for each component shall be adjusted to meet the indicated system requirements. Following the initial system adjustments, the equipment tests shall be performed in order to determine any necessary final system adjustments.

3.4 DEMONSTRATIONS

Contractor shall conduct a training course for the operating staff as designated by the Contracting Officer. The training period shall consist of a total of 16 hours of normal working time and shall start after the system is functionally completed but prior to final system acceptance. The field instructions shall cover all of the items contained in the operation and maintenance manuals as well as demonstrations of routine maintenance operations.

END OF SECTION

This page intentionally blank

SECTION 13280

ASBESTOS ABATEMENT

PART 1 GENERAL

1.1 REFERENCES

The publications listed below form a part of this specification to the extent referenced. The publications are referred to in the text by basic designation only.

AMERICAN NATIONAL STANDARDS INSTITUTE (ANSI)

ANSI Z9.2	(1979; R 1991) Fundamentals Governing the Design and Operation of Local Exhaust Systems
ANSI Z87.1	(1989; Errata; Z87.1a) Occupational and Educational Eye and Face Protection
ANSI Z88.2	(1992) Respiratory Protection

AMERICAN SOCIETY FOR TESTING AND MATERIALS (ASTM)

ASTM C 732	(1995) Aging Effects of Artificial Weathering on Latex Sealants
ASTM D 522	(1993a) Mandrel Bend Test of Attached Organic Coatings
ASTM D 1331	(1989; R 1995) Surface and Interfacial Tension of Solutions of Surface-Active Agents
ASTM D 2794	(1993) Resistance of Organic Coatings to the Effects of Rapid Deformation (Impact)
ASTM D 4397	(1996) Polyethylene Sheeting for Construction, Industrial, and Agricultural Applications
ASTM E 84	(1996a) Surface Burning Characteristics of Building Materials
ASTM E 96	(1995) Water Vapor Transmission of Materials
ASTM E 119	(1995a) Fire Tests of Building Construction and Materials
ASTM E 736	(1992) Cohesion/Adhesion of Sprayed Fire-Resistive Materials Applied to Structural Members
ASTM E 1368	(1997) Visual Inspection of Asbestos Abatement Projects

CODE OF FEDERAL REGULATIONS (CFR)

29 CFR 1910	Occupational Safety and Health Standards
29 CFR 1926	Safety and Health Regulations for Construction
40 CFR 61	National Emissions Standards for Hazardous Air Pollutants
40 CFR 763	Asbestos
42 CFR 84	Approval of Respiratory Protective Devices
49 CFR 107	Hazardous Materials Program Procedures
49 CFR 171	General Information, Regulations and Definitions
49 CFR 172	Hazardous Materials Table, Special Provisions, Hazardous Materials Communications, Emergency Response Information, and Training Requirements
49 CFR 173	Shippers - General Requirements for Shipments and Packagings

COMPRESSED GAS ASSOCIATION (CGA)

CGA G-7	(1990) Compressed Air for Human Respiration
CGA G-7.1	(1989) Commodity Specification for Air

ENGINEERING MANUALS (EM)

EM 385-1-1	(1996) Safety and Health Requirements Manual

ENVIRONMENTAL PROTECTION AGENCY (EPA)

EPA 340/1-90-018	(1990) Asbestos/NESHAP Regulated Asbestos Containing Materials Guidance
EPA 340/1-90-019	(1990) Asbestos/NESHAP Adequately Wet Guidance
EPA 560/5-85-024	(1985) Guidance for Controlling Asbestos-Containing Materials in Buildings

NATIONAL FIRE PROTECTION ASSOCIATION (NFPA)

NFPA 701	(1996) Methods of Fire Test for Flame-Resistant Textiles and Films

NATIONAL INSTITUTE FOR OCCUPATIONAL SAFETY AND HEALTH (NIOSH)

NIOSH Pub No. 84-100	(1984; Supple 1985, 1987, 1988 & 1990) NIOSH Manual of Analytical Methods

UNDERWRITERS LABORATORIES (UL)

UL 586	(1996) High-Efficiency, Particulate, Air Filter Units

WASHINGTON STATE

Chapter 296-62	(1997) General Occupational Health Standards
Chapter 296-65	(1996) Safety Standards for Asbestos Removal and Encapsulation

Puget Sound Air Pollution Control Authority (PSAPCA)

Regulation III Article 4	Asbestos Control Standards

1.2 DEFINITIONS

a. Adequately Wet: A term defined in 40 CFR 61, Subpart M, and EPA 340/1-90-019 meaning to sufficiently mix or penetrate with liquid to prevent the release of particulate. If visible emissions are observed coming from asbestos-containing material (ACM), then that material has not been adequately wetted. However, the absence of visible emissions is not sufficient evidence of being adequately wetted.

b. Aggressive Method: Removal or disturbance of building material by sanding, abrading, grinding, or other method that breaks, crumbles, or disintegrates intact asbestos-containing material (ACM).

c. Amended Water: Water containing a wetting agent or surfactant with a surface tension of at least 29 dynes per square centimeter when tested in accordance with ASTM D 1331.

d. Asbestos: Asbestos includes chrysotile, amosite, crocidolite, tremolite asbestos, anthophylite asbestos, actinolite asbestos, and any of these minerals that have been chemically treated and/or altered.

e. Asbestos-Containing Material (ACM): Any materials containing more than one percent asbestos.

f. Asbestos Fiber: A particulate form of asbestos, 5 micrometers or longer, with a length-to-width ratio of at least 3 to 1.

g. Authorized Person: Any person authorized by the Contractor and required by work duties to be present in the regulated areas.

h. Building Inspector: Individual who inspects buildings for asbestos and has EPA Model Accreditation Plan (MAP) "Building Inspector" training; accreditation required by 40 CFR 763, Subpart E, Appendix C.

i. Certified Industrial Hygienist (CIH): An Industrial Hygienist certified in the practice of industrial hygiene by the American Board of Industrial Hygiene.

j. Class I Asbestos Work: Activities defined by OSHA involving the removal of thermal system insulation (TSI) and surfacing ACM.

k. Class II Asbestos Work: Activities defined by OSHA involving the removal of ACM which is not thermal system insulation or surfacing material. This includes, but is not limited to, the removal of asbestos- containing wallboard, floor tile and sheeting, roofing and siding shingles, and construction mastic. Certain "incidental" roofing materials such as mastic, flashing and cements when they are still intact are excluded from Class II asbestos work. Removal of small amounts of these materials which would fit into a glovebag may be classified as a Class III job.

l. Class III Asbestos Work: Activities defined by OSHA that involve repair and maintenance operations, where ACM, including TSI and surfacing ACM, is likely to be disturbed. Operations may include drilling, abrading, cutting a hole, cable pulling, crawling through tunnels or attics and spaces above the ceiling, where asbestos is actively disturbed or asbestos-containing debris is actively disturbed.

m. Class IV Asbestos Work: Maintenance and custodial construction activities during which employees contact but do not disturb ACM and activities to clean-up dust, waste and debris resulting from Class I, II, and III activities. This may include dusting surfaces where ACM waste and debris and accompanying dust exists and cleaning up loose ACM debris from TSI or surfacing ACM following construction.

n. Clean room: An uncontaminated room having facilities for the storage of employees' street clothing and uncontaminated materials and equipment.

o. Competent Person: In addition to the definition in 29 CFR 1926, Section .32(f), a person who is capable of identifying existing asbestos hazards as defined in 29 CFR 1926, Section .1101, selecting the appropriate control strategy, has the authority to take prompt corrective measures to eliminate them and has EPA Model Accreditation Plan (MAP) "Contractor/Supervisor" training; accreditation required by 40 CFR 763, Subpart E, Appendix C.

p. Contractor/Supervisor: Individual who supervises asbestos abatement work and has EPA Model Accreditation Plan "Contractor/Supervisor" training; accreditation required by 40 CFR 763, Subpart E, Appendix C.

q. Critical Barrier: One or more layers of plastic sealed over all openings into a regulated area or any other similarly placed physical barrier sufficient to prevent airborne asbestos in a regulated area from migrating to an adjacent area.

r. Decontamination Area: An enclosed area adjacent and connected to the regulated area and consisting of an equipment room, shower area, and clean room, which is used for the decontamination of workers, materials, and equipment that are contaminated with asbestos.

s. Demolition: The wrecking or taking out of any load-supporting structural member and any related razing, removing, or stripping of asbestos products.

t. Disposal Bag: A 6 mil thick, leak-tight plastic bag, pre-labeled in accordance with 29 CFR 1926, Section .1101, used for transporting asbestos waste from containment to disposal site.

u. Disturbance: Activities that disrupt the matrix of ACM, crumble or pulverize ACM, or generate visible debris from ACM. Disturbance includes cutting away small amounts of ACM, no greater than the amount which can be contained in 1 standard sized glovebag or waste bag, not larger than 60 inches in length and width in order to access a building component.

v. Equipment Room or Area: An area adjacent to the regulated area used for the decontamination of employees and their equipment.

w. Employee Exposure: That exposure to airborne asbestos that would occur if the employee were not using respiratory protective equipment.

x. Fiber: A fibrous particulate, 5 micrometers or longer, with a length to width ratio of at least 3 to 1.

y. Friable ACM: A term defined in 40 CFR 61, Subpart M and EPA 340/1-90-018 meaning any material which contains more than 1 percent asbestos, as determined using the method specified in 40 CFR 763, Subpart E, Appendix A, Section 1, Polarized Light Microscopy (PLM), that when dry, can be crumbled, pulverized, or reduced to powder by hand pressure. If the asbestos content is less than 10 percent, as determined by a method other than point counting by PLM, the asbestos content is verified by point counting using PLM.

z. Glovebag: Not more than a 60 by 60 inch impervious plastic bag-like enclosure affixed around an asbestos-containing material, with glove-like appendages through which material and tools may be handled.

aa. High-Efficiency Particulate Air (HEPA) Filter: A filter capable of trapping and retaining at least 99.97 percent of all mono-dispersed particles of 0.3 micrometers in diameter.

bb. Homogeneous Area: An area of surfacing material or thermal system insulation that is uniform in color and texture.

cc. Industrial Hygienist: A professional qualified by education, training, and experience to anticipate, recognize, evaluate, and develop controls for occupational health hazards.

dd. Intact: ACM which has not crumbled, been pulverized, or otherwise deteriorated so that the asbestos is no longer likely to be bound with its matrix. Removal of "intact" asphaltic, resinous, cementitious products does not render the ACM non-intact simply by being separated into smaller pieces.

ee. Model Accreditation Plan (MAP): USEPA training accreditation requirements for persons who work with asbestos as specified in 40 CFR 763, Subpart E, Appendix C.

ff. Modification: A changed or altered procedure, material or component of a control system, which replaces a procedure, material or component of a required system.

gg. Negative Exposure Assessment: A demonstration by the Contractor to show that employee exposure during an operation is expected to be consistently below the OSHA Permissible Exposure Limits (PELs).

hh. NESHAP: National Emission Standards for Hazardous Air Pollutants. The USEPA NESHAP regulation for asbestos is at 40 CFR 61, Subpart M.

ii. Nonfriable ACM: A NESHAP term defined in 40 CFR 61, Subpart M and EPA 340/1-90-018 meaning any material containing more than 1 percent asbestos, as determined using the method specified in 40 CFR 763, Subpart E, Appendix A, Section 1, Polarized Light Microscopy, that, when dry, cannot be crumbled, pulverized or reduced to powder by hand pressure.

jj. Nonfriable ACM (Category I): A NESHAP term defined in 40 CFR 61, Subpart E and EPA 340/1-90-018 meaning asbestos-containing packings, gaskets, resilient floor covering, and asphalt roofing products containing more than 1 percent asbestos as determined using the method specified in 40 CFR 763, Subpart F, Appendix A, Section 1, Polarized Light Microscopy.

kk. Nonfriable ACM (Category II): A NESHAP term defined in 40 CFR 61, Subpart E and EPA 340/1-90-018 meaning any material, excluding Category I nonfriable ACM, containing more than 1 percent asbestos, as determined using the methods specified in 40 CFR 763, Subpart F, Appendix A, Section 1, Polarized Light Microscopy, that when dry, cannot be crumbled, pulverized, or reduced to powder by hand pressure.

ll. Permissible Exposure Limits (PELs):

(1) PEL-Time weighted average(TWA): Concentration of asbestos not in excess of 0.1 fibers per cubic centimeter of air (f/cc) as an 8 hour time weighted average (TWA), as determined by the method prescribed in 29 CFR 1926, Section .1101, Appendix A, or the current version of NIOSH Pub No. 84-100 analytical method 7400.

(2) PEL-Excursion Limit: An airborne concentration of asbestos not in excess of 1.0 f/cc of air as averaged over a sampling period of 30 minutes as determined by the method prescribed in 29 CFR 1926, Section .1101, Appendix A, or the current version of NIOSH Pub No. 84-100 analytical method 7400.

mm. Regulated Area: An OSHA term defined in 29 CFR 1926, Section .1101 meaning an area established by the Contractor to demarcate areas where Class I, II, and III asbestos work is conducted; also any adjoining area where debris and waste from such asbestos work accumulate; and an area within which airborne concentrations of asbestos exceed, or there is a reasonable possibility they may exceed, the permissible exposure limit.

nn. Removal: All operations where ACM is taken out or stripped from structures or substrates, and includes demolition operations.

oo. Repair: Overhauling, rebuilding, reconstructing, or reconditioning of structures or substrates, including encapsulation or other repair of ACM attached to structures or substrates. If the amount of asbestos so "disturbed" cannot be contained in 1 standard glovebag or waste bag, Class I precautions are required.

pp. Spills/Emergency Cleanups: Cleanup of sizable amounts of asbestos waste and debris which has occurred, for example, when water damage occurs in a building, and sizable amounts of ACM are dislodged. A Competent Person evaluates the site and ACM to be handled, and based on the type, condition and extent of the dislodged material, classifies the cleanup as Class I, II, or III. Only if the material was intact and the cleanup involves mere contact of ACM, rather than disturbance, could there be a Class IV classification.

qq. Surfacing ACM: Asbestos-containing material which contains more than 1% asbestos and is sprayed-on, troweled-on, or otherwise applied to surfaces, such as acoustical plaster on ceilings and fireproofing materials on structural members, or other materials on surfaces for acoustical, fireproofing, or other purposes.

rr. Thermal system insulation (TSI) ACM: ACM which contains more than 1% asbestos and is applied to pipes, fittings, boilers, breeching, tanks, ducts, or other interior structural components to prevent heat loss or gain or water condensation.

ss. Transite: A generic name for asbestos cement wallboard and pipe.

tt. Worker: Individual (not designated as the Competent Person or a supervisor) who performs asbestos work and has completed asbestos worker training required by 29 CFR 1926, Section .1101, to include EPA Model Accreditation Plan (MAP) "Worker" training; accreditation required by 40 CFR 763, Subpart E, Appendix C, if required by the OSHA Class of work to be performed or by the state where the work is to be performed.

1.3 DESCRIPTION OF WORK

The work covered by this section includes the removal of asbestos-containing materials (ACM) which are encountered during demolition activities associated with this project and describes procedures and equipment required to protect workers and occupants of the regulated area from contact with airborne asbestos fibers and ACM dust and debris. Activities include OSHA Class II work operations involving ACM. The work also includes containment, storage, transportation and disposal of the generated ACM wastes. More specific operational procedures shall be detailed in the required Accident Prevention Plan and its subcomponents, the Asbestos Hazard Abatement Plan and Activity Hazard Analyses required in paragraph SAFETY AND HEALTH PROGRAM AND PLANS.

The work covered by this section includes the removal of 900 square feet of cement asbestos tile.

1.3.1 Abatement Work Tasks

The specific ACM to be abated is identified on the project drawings. A summary of work task data elements for each individual ACM abatement work task to include the appropriate RESPONSE ACTION DETAIL SHEET (item to be abated and methods to be used) and SET-UP DETAIL SHEETS (containment techniques to include safety precautions and methods) is included in Table 1, "Individual Work Task Data Elements" at the end of this section. **RESPONSE ACTION DETAIL SHEETS and SET-UP DETAIL SHEETS Nos. 9A, 9B, 9C, 11, 14, 19 and 81 are attached at the end of this specification section.**

1.3.2 Unexpected Discovery of Asbestos

For any previously untested building components suspected to contain asbestos and located in areas impacted by the work, the Contractor shall notify the Contracting Officer (CO) who will have the

option of ordering up to 2 bulk samples to be obtained at the Contractor's expense and delivered to a laboratory accredited under the National Institute of Standards and Technology (NIST) "National Voluntary Laboratory Accreditation Program (NVLAP)" and analyzed by PLM at no additional cost to the Government. Any additional components identified as ACM that have been approved by the Contracting Officer for removal shall be removed by the Contractor and will be paid for by an equitable adjustment to the contract price under the CONTRACT CLAUSE titled "changes". Sampling activities undertaken to determine the presence of additional ACM shall be conducted by personnel who have successfully completed the EPA Model Accreditation Plan (MAP) "Building Inspector" training course required by 40 CFR 763, Subpart E, Appendix C.

1.4 SUBMITTALS

Government approval is required for submittals with a "GA" designation; submittals having an "FIO" designation are for information only. The following shall be submitted in accordance with Section 01330 SUBMITTAL PROCEDURES:

SD-01 Data

Materials and Equipment; FIO.

Manufacturer's catalog data for all materials and equipment to be used in the work, including brand name, model, capacity, performance characteristics and any other pertinent information. Test results and certificates from the manufacturer of encapsulants substantiating compliance with performance requirements of this specification. Material Safety Data Sheets for all chemicals to be used onsite in the same format as implemented in the Contractor's HAZARD COMMUNICATION PROGRAM. Data shall include, but shall not be limited to, the following items:

a. High Efficiency Filtered Air (HEPA) local exhaust equipment

b. Vacuum cleaning equipment

c. Pressure differential monitor for HEPA local exhaust equipment

d. Air monitoring equipment

e. Respirators

f. Personal protective clothing and equipment

(1) Coveralls
(2) Underclothing
(3) Other work clothing
(4) Foot coverings
(5) Hard hats
(6) Eye protection
(7) Other items required and approved by Contractors Designated IH and Competent Person

g. Glovebag

h. Duct Tape

i. Disposal Containers

(1) Disposal bags
(2) Fiberboard drums
(3) Paperboard boxes

j. Sheet Plastic

(1) Polyethylene Sheet - General
(2) Polyethylene Sheet - Flame Resistant
(3) Polyethylene Sheet - Reinforced

k. Wetting Agent

(1) Amended Water
(2) Removal encapsulant

l. Strippable Coating

m. Prefabricated Decontamination Unit

n. Other items

o. Chemical encapsulant

p. Chemical encasement materials

q. Material Safety Data Sheets (for all chemicals proposed)

SD-04 Drawings

Site Layout; GA.

Descriptions, detail project drawings, and site layout to include worksite containment area techniques as prescribed on applicable SET-UP DETAIL SHEETS, local exhaust ventilation system locations, decontamination and load-out units, other temporary waste storage facility, access tunnels, location of temporary utilities (electrical, water, sewer) and boundaries of each regulated area.

SD-08 Statements

Qualifications; GA.

A written report providing evidence of qualifications for personnel, facilities and equipment assigned to the work.

Training Program; FIO.

A copy of the written project site-specific training material as indicated in 29 CFR 1926, Section .1101 that will be used to train onsite employees. The training document shall be signed by the Contractor's Designated IH and Competent Person.

Medical Requirements; FIO.

Physician's written opinion.

Encapsulants; GA.

Certificates stating that encapsulants meet the applicable specified performance requirements.

SD-09 Reports

Exposure Assessment and Air Monitoring; GA.

Initial exposure assessments, negative exposure assessments, air-monitoring results and documentation.

Local Exhaust Ventilation; FIO.

Pressure differential recordings.

Licenses, Permits and Notifications; GA.

Licenses, permits, and notifications.

SD-13 Certificates

Vacuum, Filtration and Ventilation Equipment; FIO.

Manufacturer's certifications showing compliance with ANSI Z9.2 for:

a. Vacuums.

b. Water filtration equipment.

c. Ventilation equipment.

d. Other equipment required to contain airborne asbestos fibers.

SD-18 Records

Respiratory Protection Program; GA.

Records of the respirator program.

Cleanup and Disposal; GA.

Waste shipment records. Weigh bills and delivery tickets shall be furnished for information only.

1.5 QUALIFICATIONS

1.5.1 Written Qualifications and Organization Report

The Contractor shall furnish a written qualifications and organization report providing evidence of qualifications of the Contractor, Contractor's Project Supervisor, Designated Competent Person, supervisors and workers; Designated IH (person assigned to project and firm name); independent testing laboratory (including name of firm, principal, and analysts who will perform analyses); all subcontractors to be used including disposal transportation and disposal facility firms, subcontractor supervisors, subcontractor workers; and any others assigned to perform asbestos abatement and support activities. The report shall include an organization chart showing the Contractor's staff organization for this project by name and title, chain of command and reporting relationship with all subcontractors. The report shall be signed by the Contractor, the Contractor's onsite project manager, Designated Competent Person, Designated IH, designated testing laboratory and the principals of all subcontractors to be used. The Contractor shall include the following statement in the report: "By signing this report I certify that the personnel I am responsible for during the course of this project fully understand the contents of 29 CFR 1926, Section .1101, 40 CFR 61, Subpart M, and the federal, state and local requirements specified in paragraph SAFETY AND HEALTH PROGRAM AND PLANS for those asbestos abatement activities that they will be involved in."

1.5.2 Specific Requirements

The Contractor shall designate in writing, personnel meeting the following qualifications:

a. Designated Competent Person: The name, address, telephone number, and resume of the Contractor's Designated Competent Person shall be provided. Evidence that the full-time Designated Competent Person is qualified in accordance with 29 CFR 1926, Sections .32 and .1101, has EPA Model Accreditation Plan (MAP) "Contractor/Supervisor" training accreditation required by 40 CFR 763, Subpart E, Appendix C, and is experienced in the administration and supervision of asbestos abatement projects, including exposure assessment and monitoring, work practices, abatement methods, protective measures for personnel, setting up and inspecting asbestos abatement work areas, evaluating the integrity of containment barriers, placement and operation of local exhaust systems, ACM generated waste containment and disposal procedures, decontamination units installation and maintenance requirements, site safety and health requirements, notification of other employees onsite, etc. The duties of the Competent Person shall include the following: controlling entry to and exit from the regulated area; supervising any employee exposure monitoring required by 29 CFR 1926, Section .1101; ensuring that all employees working within a regulated area wear the appropriate personal protective equipment (PPE), are trained in the use of appropriate methods of exposure control, and use the hygiene facilities and decontamination procedures specified; and ensuring that engineering controls in use are in proper operating conditions and are functioning properly. The Designated Competent Person shall be responsible for compliance with applicable federal, state and local requirements, the Contractor's Accident Prevention Plan and Asbestos Hazard Abatement Plan. The Designated Competent Person shall provide, and the Contractor shall submit, the "Contractor/Supervisor" course completion certificate and the most recent certificate for required refresher training with the employee "Certificate of Worker Acknowledgment" required by this paragraph. The Contractor shall submit evidence that this person has a minimum of 2 years of on-the-job asbestos abatement experience relevant to OSHA competent person requirements. The Designated Competent Person shall be onsite at all times during the conduct of this project.

b. Project and Other Supervisors: The Contractor shall provide the name, address, telephone number, and resume of the Project Supervisor and other supervisors who have responsibility to implement the Accident Prevention Plan, including the Asbestos Hazard Abatement Plan and Activity Hazard Analyses, the authority to direct work performed under this contract and verify compliance, and have EPA Model Accreditation Plan (MAP) "Contractor/Supervisor" training accreditation required by 40 CFR 763, Subpart E, Appendix C.

c. Designated Industrial Hygienist: The Contractor shall provide the name, address, telephone number, resume and other information specified below for the Industrial Hygienist (IH) selected to prepare the Contractor's Asbestos Hazard Abatement Plan, prepare and perform training, direct air monitoring and assist the Contractor's Competent Person in implementing and ensuring that safety and health requirements are complied with during the performance of all required work. The Designated IH shall be a person who is [board certified in the practice of industrial hygiene] [or] [board eligible (meets all education and experience requirements)] as determined and documented by the American Board of Industrial Hygiene (ABIH), has EPA Model Accreditation Plan (MAP) "Contractor/Supervisor" training accreditation required by 40 CFR 763, Subpart E, Appendix C, and has a minimum of 2 years of comprehensive experience in planning and overseeing asbestos abatement activities. The Designated IH shall provide, and the Contractor shall submit, the "Contractor/Supervisor" course completion certificate and the most recent certificate for required refresher training with the employee "Certificate of Worker Acknowledgment" required by this paragraph. The Designated IH shall be completely independent from the Contractor according to federal, state, or local regulations; that is, shall not be a Contractor's employee or be an employee or principal of a firm in a business relationship with the Contractor negating such independent status. A copy of the Designated IH's current valid ABIH [certification] [confirmation of eligibility in writing from the ABIH] shall be included. The Designated IH shall visit the site once during the duration of asbestos activities and shall be available for emergencies.

d. Asbestos Abatement Workers: Asbestos abatement workers shall meet the requirements contained in 29 CFR 1926, Section .1101, 40 CFR 61, Subpart M, and other applicable federal, state and local requirements. Worker training documentation shall be provided as required on the "Certificate of Workers Acknowledgment" in this paragraph.

e. Worker Training and Certification of Worker Acknowledgment: Training documentation will be required for each employee who will perform OSHA Class I, Class II, Class III, or Class IV asbestos abatement operations. Such documentation shall be submitted on a Contractor generated form titled "Certificate of Workers Acknowledgment", to be completed for each employee in the same format and containing the same information as the example certificate at the end of this section. Training course completion certificates (initial and most recent update refresher) required by the information checked on the form shall be attached.

f. Physician: The Contractor shall provide the name, medical qualifications, address, telephone number and resume of the physician who will or has performed the medical examinations and evaluations of the persons who will conduct the asbestos abatement work tasks. The physician shall be currently licensed by the state where the workers will be or have been examined, have expertise in pneumoconiosis and shall be responsible for the determination of medical surveillance protocols and for review of examination/test results performed in compliance with 29 CFR 1926, Section .1101 and paragraph MEDICAL

REQUIREMENTS. The physician shall be familiar with the site's hazards and the scope of this project.

g. First Aid and CPR Trained Persons: The names of at least 2 persons who are currently trained in first aid and CPR by the American Red Cross or other approved agency shall be designated and shall be onsite at all times during site operations. They shall be trained in universal precautions and the use of PPE as described in the Bloodborne Pathogens Standard of 29 CFR 1910, Section .1030 and shall be included in the Contractor's Bloodborne Pathogen Program. These persons may perform other duties but shall be immediately available to render first aid when needed. A copy of each designated person's current valid First Aid and CPR certificate shall be provided.

h. Independent Testing Laboratory: The Contractor shall provide the name, address and telephone number of the independent testing laboratory selected to perform the sample analyses and report the results. **The laboratory shall be NVLAP certified. A copy of the certification shall be provided in the abatement plan**. The testing laboratory shall be completely independent from the Contractor as recognized by federal, state or local regulations. Written verification of the following criteria, signed by the testing laboratory principal and the Contractor, shall be submitted:

(1) Phase contrast microscopy (PCM): The laboratory is fully equipped and proficient in conducting PCM of airborne samples using the methods specified by 29 CFR 1926, Section .1101, OSHA method ID-160, the most current version of NIOSH Pub No. 84-100 Method 7400, analyst meets the same requirements.

(2) Polarized light microscopy (PLM): The laboratory is fully equipped and proficient in conducting PLM analyses of suspect ACM bulk samples in accordance with 40 CFR 763, Subpart E, Appendix E; the laboratory is currently accredited by NIST under the NVLAP for bulk asbestos analysis and will use analysts (names shall be provided) with demonstrated proficiency to conduct PLM to include its application to the identification and quantification of asbestos content.

i. Disposal Facility, Transporter: The Contractor shall provide written evidence that the landfill to be used is approved for asbestos disposal by the USEPA and WA state regulatory agencies. Copies of signed agreements between the Contractor (including subcontractors and transporters) and the asbestos waste disposal facility to accept and dispose of all asbestos containing waste generated during the performance of this contract shall be provided. Qualifications shall be provided for each subcontractor or transporter to be used, indicating previous experience in transport and disposal of asbestos waste to include all required state and local waste hauler requirements for asbestos. The Contractor and transporters shall meet the DOT requirements of 49 CFR 171, 49 CFR 172, and 49 CFR 173 as well as registration requirements of 49 CFR 107 and other applicable state or local requirements. The disposal facility shall meet the requirements of 40 CFR 61, Sections .154 or .155, as required in 40 CFR 61, Section .150(b), and other applicable state or local requirements.

1.5.3 Federal, State or Local Citations on Previous Projects

The Contractor and all subcontractors shall submit a statement, signed by an officer of the company, containing a record of any citations issued by Federal, State or local regulatory agencies relating to

asbestos activities (including projects, dates, and resolutions); a list of penalties incurred through non-compliance with asbestos project specifications, including liquidated damages, overruns in scheduled time limitations and resolutions; and situations in which an asbestos-related contract has been terminated (including projects, dates, and reasons for terminations). If there are none, a negative declaration signed by an officer of the company shall be provided.

1.6 REGULATORY REQUIREMENTS

In addition to detailed requirements of this specification, work performed under this contract shall comply with EM 385-1-1, applicable federal, state, and local laws, ordinances, criteria, rules and regulations regarding handling, storing, transporting, and disposing of asbestos waste materials. This includes, but is not limited to, OSHA standards, 29 CFR 1926, especially Section .1101, 40 CFR 61, Subpart M and 40 CFR 763. **The Contractor shall also be responsible for obtaining all permits in accordance with demolition and disposal activities. The Contractor shall notify the Puget Sound Air Pollution Control Authority (PSAPCA) a minimum of 10 days (PSAPCA Regulation III Article 4) prior to the start of demolition in order to obtain the appropriate demolition permits.**

1.7 SAFETY AND HEALTH PROGRAM AND PLANS

The Contractor shall develop and submit a written comprehensive site-specific Accident Prevention Plan at least 30 days prior to the preconstruction conference. The Accident Prevention Plan shall address requirements of EM 385-1-1, Appendix A, covering onsite work to be performed by the Contractor and subcontractors. The Accident Prevention Plan shall incorporate an Asbestos Hazard Abatement Plan, and Activity Hazard Analyses as separate appendices into 1 site specific Accident Prevention Plan document. Any portions of the Contractor's overall Safety and Health Program that are referenced in the Accident Prevention Plan, e.g., respirator program, hazard communication program, confined space entry program, etc., shall be included as appendices to the Accident Prevention Plan. The plan shall take into consideration all the individual asbestos abatement work tasks identified in Table 1. The plan shall be prepared, signed (and sealed, including certification number if required), and dated by the Contractor's Designated IH, Competent Person, and Project Supervisor.

1.7.1 Asbestos Hazard Abatement Plan Appendix

The Asbestos Hazard Abatement Plan appendix to the Accident Prevention Plan shall include, but is not be limited to, the following:

a. The personal protective equipment to be used;

b. The location and description of regulated areas including clean and dirty areas, access tunnels, and decontamination unit (clean room, shower room, equipment room, storage areas such as load-out unit);

c. Initial exposure assessment in accordance with 29 CFR 1926, Section .1101;

d. Level of supervision;

e. Method of notification of other employers at the worksite;

f. Abatement method to include containment and control procedures;

g. Interface of trades involved in the construction;

h. Sequencing of asbestos related work;

i. Storage and disposal procedures and plan;

j. Type of wetting agent and asbestos encapsulant to be used;

k. Location of local exhaust equipment;

l. Air monitoring methods (personal, environmental and clearance);

m. Bulk sampling and analytical methods (if required);

n. A detailed description of the method to be employed in order to control the spread of ACM wastes and airborne fiber concentrations;

o. Fire and medical emergency response procedures;

p. The security procedures to be used for all regulated areas.

1.7.2 Activity Hazard Analyses Appendix

Activity Hazard Analyses, for each major phase of work, shall be submitted and updated during the project. The Activity Hazard Analyses format shall be in accordance with EM 385-1-1 (Figure 1-1). The analysis shall define the activities to be performed for a major phase of work, identify the sequence of work, the specific hazards anticipated, and the control measures to be implemented to eliminate or reduce each hazard to an acceptable level. Work shall not proceed on that phase until the Activity Hazard Analyses has been accepted and a preparatory meeting has been conducted by the Contractor to discuss its contents with everyone engaged in the activities, including the onsite Government representatives. The Activity Hazard Analyses shall be continuously reviewed and, when appropriate, modified to address changing site conditions or operations.

1.8 PRECONSTRUCTION CONFERENCE AND ONSITE SAFETY

The Contractor and the Contractor's Designated Competent Person, Project Supervisor, and Designated IH shall meet with the Contracting Officer prior to beginning work at a safety preconstruction conference to discuss the details of the Contractor's submitted Accident Prevention Plan to include the Asbestos Hazard Abatement Plan and Activity Hazard Analyses appendices. Deficiencies in the Accident Prevention Plan will be discussed and the Accident Prevention Plan shall be revised to correct the deficiencies and resubmitted for acceptance. Any changes required in the specification as a result of the Accident Prevention Plan shall be identified specifically in the plan to allow for free discussion and acceptance by the Contracting Officer, prior to the start of work. Onsite work shall not begin until the Accident Prevention Plan has been accepted. A copy of the written Accident Prevention Plan shall be maintained onsite. Changes and modifications to the accepted Accident Prevention Plan shall be made with the knowledge and concurrence of the Designated IH, the Project Supervisor, Designated Competent Person, and the Contracting Officer. Should any unforeseen hazard become evident during the performance of the work, the Designated IH shall bring such hazard to the attention of the Project Supervisor, Designated Competent Person, and the Contracting Officer, both verbally and in writing, for resolution as soon as possible. In the interim, all necessary action shall be taken by the Contractor

to restore and maintain safe working conditions in order to safeguard onsite personnel, visitors, the public, and the environment.

1.9 SECURITY

A log book shall be kept documenting entry into and out of the regulated area. Entry into regulated areas shall only be by personnel authorized by the Contractor and the Contracting Officer. Personnel authorized to enter regulated areas shall be trained, be medically evaluated, and wear the required personal protective equipment, for the specific regulated area to be entered.

1.10 MEDICAL REQUIREMENTS

Medical requirements shall conform to 29 CFR 1926, Section .1101.

1.11 TRAINING PROGRAM

1.11.1 General Training Requirements

The Contractor shall establish a training program as specified by EPA Model Accreditation Plan (MAP), training requirements at 40 CFR 763, Subpart E, Appendix C, the State of Washington regulations, see references, OSHA requirements at 29 CFR 1926, Section .1101(k)(9), and this specification. Contractor employees shall complete the required training for the type of work they are to perform and such training shall be documented and provided to the Contracting Officer as specified in paragraph QUALIFICATIONS.

1.11.2 Project Specific Training

Prior to commencement of work, each worker shall be instructed by the Contractor's Designated IH and Competent Person in the following project specific training:

a. The hazards and health effects of the specific types of ACM to be abated;

b. The content and requirements of the Contractor's Accident Prevention Plan to include the Asbestos Hazard Abatement Plan and Activity Hazard Analyses and site-specific safety and health precautions;

c. Hazard Communication Program;

d. Hands-on training for each asbestos abatement technique to be employed;

e. Heat and/or cold stress monitoring specific to this project;

f. Air monitoring program and procedures;

g. Medical surveillance to include medical and exposure record-keeping procedures;

h. The association of cigarette smoke and asbestos-related disease;

i. Security procedures;

j. Specific work practice controls and engineering controls required for each Class of work in accordance with 29 CFR 1926, Section .1101.

1.12 RESPIRATORY PROTECTION PROGRAM

The Contractor's Designated IH shall establish in writing, and implement a respiratory protection program in accordance with 29 CFR 1926, Section .1101, 29 CFR 1910, Section .134, ANSI Z88.2, CGA G-7, CGA G-7.1.

1.12.1 Respiratory Fit Testing

A qualitative or quantitative fit test conforming to 29 CFR 1926, Section 1101, Appendix C shall be conducted by the Contractor's Designated IH for each Contractor worker required to wear a respirator, and for the Contracting Officer and authorized visitors who enter a regulated area where respirators are required to be worn. A respirator fit test shall be performed for each worker wearing a negative-pressure respirator prior to initially wearing a respirator on this project and every 6 months thereafter. The qualitative fit tests may be used only for testing the fit of half-mask respirators where they are permitted to be worn, or of full-facepiece air purifying respirators where they are worn at levels at which half-facepiece air purifying respirators are permitted. If physical changes develop that will affect the fit, a new fit test for the worker shall be performed. Functional fit checks shall be performed by employees each time a respirator is put on and in accordance with the manufacturer's recommendation.

1.12.2 Respirator Selection and Use Requirements

The Contractor shall provide respirators, and ensure that they are used as required by 29 CFR 1926, Section .1101 and in accordance with the manufacturer's recommendations. Respirators shall be jointly approved by the Mine Safety and Health Administration and the National Institute for Occupational Safety and Health (MSHA/NIOSH), or by NIOSH, under the provisions of 42 CFR 84, for use in environments containing airborne asbestos fibers. Respirators shall be used in the following circumstances:

a. During all Class I asbestos jobs.

b. During all Class II work where the ACM is not removed in a substantially intact state.

c. During all Class II and III work which is not performed using wet methods. Respirators need not be worn during removal of ACM from sloped roofs when a negative exposure assessment has been made and ACM is removed in an intact state.

d. During all Class II and III asbestos jobs where the Contractor does not produce a negative exposure assessment.

e. During all Class III jobs where TSI or surfacing ACM is being disturbed.

f. During all Class IV work performed within regulated areas where employees performing other work are required to wear respirators.

g. During all work where employees are exposed above the PEL-TWA or PEL-Excursion Limit.

h. In emergencies

1.12.3 Class I Work

The Contractor shall provide: (1) a tight-fitting, powered air purifying respirator equipped with high efficiency filters, or (2) a full-facepiece supplied air respirator operated in the pressure demand mode, equipped with HEPA egress cartridges, or (3) an auxiliary positive pressure self-contained breathing apparatus, for all employees within the regulated area where Class I work is being performed; provided that a negative exposure assessment has not been produced, and that the exposure level will not exceed 1 f/cc as an 8-hour time weighted average. A full-facepiece supplied air respirator, operated in the pressure demand mode, equipped with an auxiliary positive pressure self-contained breathing apparatus shall be provided under such conditions, if the exposure assessment indicates exposure levels above 1 f/cc as an 8-hour time weighted average.

1.12.4 Class II and III Work

The Contractor shall provide an air purifying respirator, other than a disposable respirator, equipped with high-efficiency filters whenever the employee performs Class II and III asbestos jobs where the Contractor does not produce a negative exposure assessment; and Class III jobs where TSI or surfacing ACM is being disturbed.

1.12.5 Sanitation

Employees who wear respirators shall be permitted to leave work areas to wash their faces and respirator facepieces whenever necessary to prevent skin irritation associated with respirator use.

1.13 HAZARD COMMUNICATION PROGRAM

A hazard communication program shall be established and implemented in accordance with 29 CFR 1926, Section .59. Material safety data sheets (MSDSs) shall be provided for all hazardous materials brought onto the worksite. One copy shall be provided to the Contracting Officer and 1 copy shall be included in the Contractor's Hazard Communication Program.

1.14 LICENSES, PERMITS AND NOTIFICATIONS

1.14.1 General Legal Requirements

Necessary licenses, permits and notifications shall be obtained in conjunction with the project's asbestos abatement, transportation and disposal actions and timely notification furnished of such actions as required by federal, state, regional, and local authorities. Notification shall be by Certified Mail, Return Receipt Requested. The Contractor shall furnish copies of the receipts to the Contracting Officer, in writing, prior to the commencement of work. Local fire department shall be notified 3 days before fire-proofing material is removed from a building and the notice shall specify whether or not the material contains asbestos. A copy of the rental company's written acknowledgment and agreement shall be provided as required by paragraph RENTAL EQUIPMENT. For licenses, permits, and notifications that the Contractor is responsible for obtaining, the Contractor shall pay any associated fees or other costs incurred.

1.14.2 Litigation and Notification

The Contractor shall notify the Contracting Officer if any of the following occur:

a. The Contractor or any of the subcontractors are served with notice of violation of any law, regulation, permit or license which relates to this contract;

b. Proceedings are commenced which could lead to revocation of related permits or licenses; permits, licenses or other Government authorizations relating to this contract are revoked;

c. Litigation is commenced which would affect this contract;

d. The Contractor or any of the subcontractors become aware that their equipment or facilities are not in compliance or may fail to comply in the future with applicable laws or regulations.

1.15 PERSONAL PROTECTIVE EQUIPMENT

The Contractor's Designated IH and Designated Competent Person shall select and approve all the required personal protective clothing and equipment to be used.

1.15.1 Respirators

Respirators shall be in accordance with paragraph RESPIRATORY PROTECTION PROGRAM.

1.15.2 Whole Body Protection

Personnel exposed to airborne concentrations of asbestos that exceed the PELs, or for all OSHA Classes of work for which a required negative exposure assessment is not produced, shall be provided with whole body protection and such protection shall be worn properly. The Contractor's Designated IH and Competent Person shall select and approve the whole body protection to be used. Disposable whole body protection shall be disposed of as asbestos contaminated waste upon exiting from the regulated area. Recommendations made by the Contractor's Designated IH to downgrade whole body protection shall be submitted in writing to the Contracting Officer. The Contractor's Designated Competent Person, in consultation with the Designated IH, has the authority to take immediate action to upgrade or downgrade whole body protection when there is an immediate danger to the health and safety of the wearer.

1.15.2.1 Coveralls

Coveralls with a zipper front shall be provided. Sleeves shall be secured at the wrists, and foot coverings secured at the ankles.

1.15.2.2 Underwear

Disposable underwear shall be provided. If reusable underwear are used, they shall be disposed of as asbestos contaminated waste or laundered in accordance with 29 CFR 1926, Section .1101. Asbestos abatement workers shall not remove contaminated reusable underwear worn during abatement of ACM from the site to be laundered.

1.15.2.3 Gloves

Gloves shall be provided to protect the hands. Where there is the potential for hand injuries (i.e., scrapes, punctures, cuts, etc.) a suitable glove shall be provided and used.

1.15.2.4 Foot Coverings

Cloth socks shall be provided and worn next to the skin. Footwear, as required by OSHA and EM 385-1-1, that is appropriate for safety and health hazards in the area shall be worn. Rubber boots shall be used in moist or wet areas. Reusable footwear removed from the regulated area shall be thoroughly decontaminated or disposed of as ACM waste. Disposable protective foot covering shall be disposed of as ACM waste. If rubber boots are not used, disposable foot covering shall be provided.

1.15.2.5 Head Covering

Hood type head covering shall be provided. In addition, protective head gear (hard hats) shall be provided as required. Hard hats shall only be removed from the regulated area after being thoroughly decontaminated.

1.15.2.6 Protective Eye Wear

Eye protection provided shall be in accordance with ANSI Z87.1.

1.16 HYGIENE FACILITIES AND PRACTICES

The Contractor shall establish a decontamination area for the decontamination of employees, material and equipment. The Contractor shall ensure that employees enter and exit the regulated area through the decontamination area.

1.16.1 Shower Facilities

Shower facilities, when provided, shall comply with 29 CFR 1910, Section .141(d)(3).

1.16.2 Not Used

1.16.3 Not Used

1.16.4 Single Stage Decontamination Area

A decontamination area (equipment room/area) shall be provided for Class I work involving less than 25 feet or 10 square feet of TSI or surfacing ACM, and for Class II and Class III asbestos work operations where exposures exceed the PELs or where there is no negative exposure assessment produced before the operation. The equipment room or area shall be adjacent to the regulated area for the decontamination of employees, material, and their equipment which is contaminated with asbestos. The equipment room or area shall consist of an area covered by an impermeable drop cloth on the floor or horizontal working surface. The area must be of sufficient size to accommodate cleaning of equipment and removing personal protective equipment without spreading contamination beyond the area. Surfaces of the equipment room shall be wet wiped 2 times after each shift. Materials used for wet wiping shall be disposed of as asbestos contaminated waste.

1.16.5 Decontamination Requirements for Class IV Work

The Contractor shall ensure that employees performing Class IV work within a regulated area comply with the hygiene practice required of employees performing work which has a higher classification within that regulated area, or the Contractor shall provide alternate decontamination area facilities for employees cleaning up debris and material which is TSI or surfacing ACM.

1.16.6 Decontamination Area Entry Procedures

The Contractor shall ensure that employees entering the decontamination area through the clean room or clean area:

a. Remove street clothing in the clean room or clean area and deposit it in lockers.

b. Put on protective clothing and respiratory protection before leaving the clean room or clean area.

c. Pass through the equipment room to enter the regulated area.

1.16.7 Decontamination Area Exit Procedures

The Contractor shall ensure that the following procedures are followed:

a. Before leaving the regulated area, respirators shall be worn while employees remove all gross contamination and debris from their work clothing using a HEPA vacuum.

b. Employees shall remove their protective clothing in the equipment room and deposit the clothing in labeled impermeable bags or containers (see Detail Sheets 9 and 14) for disposal and/or laundering.

c. Employees shall not remove their respirators in the equipment room.

d. Remove their contaminated work suits in the equipment room, without cleaning worksuits, and proceed to a shower that is not adjacent to the work area.

e. After showering, employees shall enter the clean room before changing into street clothes.

1.16.8 Lunch Areas

The Contractor shall provide lunch areas in which the airborne concentrations of asbestos are below 0.01 f/cc.

1.16.9 Smoking

Smoking, if allowed by the Contractor, shall only be permitted in designated areas approved by the Contracting Officer.

1.17 REGULATED AREAS

All Class I, II, and III asbestos work shall be conducted within regulated areas. The regulated area shall be demarcated to minimize the number of persons within the area and to protect persons outside the area from exposure to airborne asbestos. Where critical barriers or negative pressure enclosures are used, they shall demarcate the regulated area. Access to regulated areas shall be limited to authorized persons. The Contractor shall control access to regulated areas, ensure that only authorized personnel enter, and verify that Contractor required medical surveillance, training and respiratory protection program requirements are met prior to allowing entrance.

1.18 WARNING SIGNS AND TAPE

Warning signs and tape printed in English shall be provided at the regulated boundaries and entrances to regulated areas. The Contractor shall ensure that all personnel working in areas contiguous to regulated areas comprehend the warning signs. Signs shall be located to allow personnel to read the signs and take the necessary protective steps required before entering the area. Warning signs, as shown and described in DETAIL SHEET 11, shall be in vertical format conforming to 29 CFR 1910 and 29 CFR 1926, Section .1101, a minimum of 20 by 14 inches, and displaying the following legend in the lower panel:

DANGER
ASBESTOS
CANCER AND LUNG DISEASE HAZARD
AUTHORIZED PERSONNEL ONLY

Spacing between lines shall be at least equal to the height of the upper of any two lines. Warning tape shall be provided as shown and described on DETAIL SHEET 11.

1.19 WARNING LABELS

Warning labels shall be affixed to all asbestos disposal containers used to contain asbestos materials, scrap, waste debris, and other products contaminated with asbestos. Containers with preprinted warning labels conforming to requirements are acceptable. Warning labels shall be as described in DETAIL SHEET 14, shall conform to 29 CFR 1926, Section .1101 and shall be of sufficient size to be clearly legible displaying the following legend:

DANGER
CONTAINS ASBESTOS FIBERS
AVOID CREATING DUST
CANCER AND LUNG DISEASE HAZARD

1.20 Not Used

1.21 TOOLS

Vacuums shall be leak proof to the filter, equipped with HEPA filters, of sufficient capacity and necessary capture velocity at the nozzle or nozzle attachment to efficiently collect, transport and retain the ACM waste material. Power tools shall not be used to remove ACM unless the tool is equipped with effective, integral HEPA filtered exhaust ventilation capture and collection system, or has otherwise been approved for use by the Contracting Officer. Residual asbestos shall be removed from reusable tools prior to storage and reuse. Reusable tools shall be thoroughly decontaminated prior to being removed from regulated areas.

1.22 RENTAL EQUIPMENT

If rental equipment is to be used, written notification shall be provided to the rental agency, concerning the intended use of the equipment, the possibility of asbestos contamination of the equipment and the steps that will be taken to decontaminate such equipment. A written acceptance of the terms of the Contractor's notification shall be obtained from the rental agency.

1.23 AIR MONITORING EQUIPMENT

The Contractor's Designated IH shall approve air monitoring equipment to be used to collect samples. The equipment shall include, but shall not be limited to:

a. High-volume sampling pumps that can be calibrated and operated at a constant airflow up to 16 liters per minute when equipped with a sampling train of tubing and filter cassette.

b. Low-volume, battery powered, body-attachable, portable personal pumps that can be calibrated to a constant airflow up to approximately 3.5 liters per minute when equipped with a sampling train of tubing and filter cassette, and a self-contained rechargeable power pack capable of sustaining the calibrated flow rate for a minimum of 10 hours. The pumps shall also be equipped with an automatic flow control unit which shall maintain a constant flow, even as filter resistance increases due to accumulation of fiber and debris on the filter surface.

c. Single use standard 25 mm diameter cassette, open face, 0.8 micron pore size, mixed cellulose ester membrane filters and cassettes with 50 mm electrically conductive extension cowl, and shrink bands, to be used with low flow pumps in accordance with 29 CFR 1926, Section .1101 for personal air sampling.

d. Single use standard 25 mm diameter cassette, open face, 0.45 micron pore size, mixed cellulose ester membrane filters and cassettes with 50 mm electrically conductive cowl, and shrink bands, to be used with high flow pumps when conducting environmental area sampling using NIOSH Pub No. 84-100 Methods 7400 and 7402, (and the transmission electric microscopy method specified at 40 CFR 763 if required).

e. Appropriate plastic tubing to connect the air sampling pump to the selected filter cassette.

f. A flow calibrator capable of calibration to within plus or minus 2 percent of reading over a temperature range of minus 4 to plus 140 degrees F and traceable to a NIST primary standard.

1.24 EXPENDABLE SUPPLIES

1.24.1 Not used.

1.24.2 Duct Tape

Industrial grade duct tape of appropriate widths suitable for bonding sheet plastic and disposal container shall be provided.

1.24.3 Disposal Containers

Leak-tight (defined as solids, liquids, or dust that cannot escape or spill out) disposal containers shall be provided for ACM wastes as required by 29 CFR 1926 Section .1101 and DETAIL SHEETS 9A, 9B, 9C and 14.

1.24.4 Disposal Bags

Leak-tight bags, 6 mil thick, shall be provided for placement of asbestos generated waste as described in DETAIL SHEET 9A.

1.24.5 Fiberboard Drums

Fiberboard drums shall be provided as required.

1.24.6 Cardboard Boxes

Heavy-duty corrugated cardboard boxes, coated with plastic or wax to retard deterioration from moisture, shall be provided as described in DETAIL SHEET 9C, if required by state and local requirements. Boxes shall fit into selected ACM disposal bags. Filled boxes shall be sealed leak-tight with duct tape.

1.24.7 Sheet Plastic

Sheet plastic shall be polyethylene of 6 mil minimum thickness and shall be provided in the largest sheet size necessary to minimize seams, as indicated on the project drawings. Film shall conform to ASTM D 4397, except as specified below:

1.24.7.1 Flame Resistant

Where a potential for fire exists, flame-resistant sheets shall be provided. Film shall conform to the requirements of NFPA 701.

1.24.7.2 Reinforced

Reinforced sheets shall be provided where high skin strength is required, such as where it constitutes the only barrier between the regulated area and the outdoor environment. The sheet stock shall consist of translucent, nylon-reinforced or woven-polyethylene thread laminated between 2 layers of polyethylene film. Film shall meet flame resistant standards of NFPA 701.

1.24.8 Amended Water

Amended water shall meet the requirements of ASTM D 1331.

1.24.9 Not Used

1.24.10 Leak-tight Wrapping

Two layers of 6 mil minimum thick polyethylene sheet stock shall be used for the containment of removed asbestos-containing components or materials such as reactor vessels, large tanks, boilers, insulated pipe segments and other materials too large to be placed in disposal bags as described in DETAIL SHEET 9B. Upon placement of the ACM component or material, each layer shall be individually leak-tight sealed with duct tape.

1.24.11 Not Used

1.24.12 Wetting Agents

Removal encapsulant (a penetrating encapsulant) shall be provided when conducting removal abatement activities that require a longer removal time or are subject to rapid evaporation of amended water. The removal encapsulant shall be capable of wetting the ACM and retarding fiber release during disturbance of the ACM greater than or equal to that provided by amended water. Performance requirements for penetrating encapsulants are specified in paragraph ENCAPSULANTS.

1.24.13 Strippable Coating

Strippable coating in aerosol cans shall be used to adhere to surfaces and to be removed cleanly by stripping, at the completion of work. This work shall only be done in well ventilated areas.

1.25 MISCELLANEOUS ITEMS

A sufficient quantity of other items, such as, but not limited to: scrapers, brushes, brooms, staple guns, tarpaulins, shovels, rubber squeegees, dust pans, other tools, scaffolding, staging, enclosed chutes, wooden ladders, lumber necessary for the construction of containments, UL approved temporary electrical equipment, material and cords, ground fault circuit interrupters, water hoses of sufficient length, fire extinguishers, first aid kits, portable toilets, logbooks, log forms, markers with indelible ink, spray paint in bright color to mark areas, project boundary fencing, etc., shall be provided.

PART 2 PRODUCTS

2.1 ENCAPSULANTS

Encapsulants shall conform to USEPA requirements, shall contain no toxic or hazardous substances and no solvent and shall meet the following requirements:

ALL ENCAPSULANTS

Requirement	Test Standard
Flame Spread - 25, Smoke Emission - 50	ASTM E 84
Combustion Toxicity Zero Mortality	Univ. of Pittsburgh Protocol
Life Expectancy, 20 yrs Accelerated Aging Test	ASTM C 732
Permeability, Minimum 0.4 perms	ASTM E 96

Additional Requirements for Bridging Encapsulant

Requirement	Test Standard
Cohesion/Adhesion Test, 50 pounds of force/foot	ASTM E 736
Fire Resistance, Negligible affect on fire resistance rating over 3 hour test (Classified	ASTM E 119

by UL for use over fibrous and cementitious sprayed fireproofing)	
Impact Resistance, Minimum 43 in-lb (Gardner Impact Test)	ASTM D 2794
Flexibility, no rupture or cracking (Mandrel Bend Test)	ASTM D 522

Additional Requirements for Penetrating Encapsulant

Requirement	Test Standard
Cohesion/Adhesion Test, 50 pounds of force/foot	ASTM E 736
Fire Resistance, Negligible affect on fire resistance rating over 3 hour test(Classified by UL for use over fibrous and cementitious sprayed fireproofing)	ASTM E 119
Impact Resistance, Minimum 43 in-lb (Gardner Impact Test)	ASTM D 2794
Flexibility, no rupture or cracking (Mandrel Bend Test)	ASTM D 522

Additional Requirements for Lockdown Encapsulant

Requirement	Test Standard
Fire Resistance, Negligible affect on fire resistance rating over 3 hour test(Tested with fireproofing over encapsulant applied directly to steel member)	ASTM E 119
Bond Strength, 100 pounds of force/foot (Tests compatibility with cementitious and fibrous fireproofing)	ASTM E 736

2.2 ENCASEMENT PRODUCTS

Encasement shall consist of primary cellular polymer coat, polymer finish coat, and any other finish coat as approved by the Contracting Officer.

PART 3 EXECUTION

3.1 GENERAL REQUIREMENTS

Asbestos abatement work tasks shall be performed as shown on the detailed plans and drawings, as summarized in paragraph DESCRIPTION OF WORK and including Table 1 and the Contractor's Accident Prevention Plan, Asbestos Hazard Abatement Plan, and the Activity Hazard Analyses. The Contractor shall use the engineering controls and work practices required in 29 CFR 1926, Section .1101(g) in all operations regardless of the levels of exposure. Personnel shall wear and utilize

protective clothing and equipment as specified. The Contractor shall not permit eating, smoking, drinking, chewing or applying cosmetics in the regulated area. All hot work (burning, cutting, welding, etc.) shall be conducted under controlled conditions in conformance with 29 CFR 1926, Section .352, Fire Prevention. Personnel of other trades, not engaged in asbestos abatement activities, shall not be exposed at any time to airborne concentrations of asbestos unless all the administrative and personal protective provisions of the Contractor's Accident Prevention Plan are complied with. Power to the regulated area shall be locked-out and tagged in accordance with 29 CFR 1910, and temporary electrical service with ground fault circuit interrupters shall be provided as needed. Temporary electrical service shall be disconnected when necessary for wet removal. The Contractor shall stop abatement work in the regulated area immediately when the airborne total fiber concentration: (1) equals or exceeds 0.01 f/cc, or the pre-abatement concentration, whichever is greater, outside the regulated area; or (2) equals or exceeds 1.0 f/cc inside the regulated area. The Contractor shall correct the condition to the satisfaction of the Contracting Officer, including visual inspection and air sampling. Work shall resume only upon notification by the Contracting Officer. Corrective actions shall be documented.

3.2 PROTECTION OF ADJACENT WORK OR AREAS TO REMAIN

Asbestos abatement shall be performed without damage to or contamination of adjacent work or area. Where such work or area is damaged or contaminated, as verified by the Contracting Officer using visual inspection or sample analysis, it shall be restored to its original condition or decontaminated by the Contractor at no expense to the Government, as deemed appropriate by the Contracting Officer. This includes inadvertent spill of dirt, dust or debris in which it is reasonable to conclude that asbestos may exist. When these spills occur, work shall stop in all effected areas immediately and the spill shall be cleaned. When satisfactory visual inspection and air sampling analysis results are obtained and have been evaluated by the Contractor's Designated IH and the Contracting Officer, work shall proceed.

3.3 OBJECTS

3.3.1 Not Used

3.3.2 Stationary Objects

Stationary objects and furnishings shall be covered with 2 layers of polyethylene and edges sealed with duct tape.

3.3.3 Not Used

3.4 BUILDING VENTILATION SYSTEM AND CRITICAL BARRIERS

Critical barriers shall be installed as required to prevent unauthorized personnel from entering the abatement area.

3.5 PRECLEANING

Not Used

3.6 METHODS OF COMPLIANCE

3.6.1 Mandated Practices

The Contractor shall employ proper handling procedures in accordance with 29 CFR 1926 and 40 CFR 61, Subpart M, and the specified requirements. The specific abatement techniques and items identified shall be detailed in the Contractor's Asbestos Hazard Abatement Plan including, but not limited to, details of construction materials, equipment, and handling procedures. The Contractor shall use the following engineering controls and work practices in all operations, regardless of the levels of exposure:

a. Vacuum cleaners equipped with HEPA filters to collect debris and dust containing ACM.

b. Wet methods or wetting agents to control employee exposures during asbestos handling, mixing, removal, cutting, application, and cleanup; except where it can be demonstrated that the use of wet methods is unfeasible due to, for example, the creation of electrical hazards, equipment malfunction, and in roofing.

c. Prompt clean-up and disposal in leak-tight containers of wastes and debris contaminated with asbestos.

d. Inspection and repair of polyethylene in work and high traffic areas.

e. Cleaning of equipment and surfaces of containers filled with ACM prior to removing them from the equipment room or area.

3.6.2 Control Methods

The Contractor shall use the following control methods to comply with the PELs:

a. Local exhaust ventilation equipped with HEPA filter dust collection systems;

b. Enclosure or isolation of processes producing asbestos dust;

c. Ventilation of the regulated area to move contaminated air away from the breathing zone of employees and toward a filtration or collection device equipped with a HEPA filter;

d. Use of other work practices and engineering controls;

e. Where the feasible engineering and work practice controls described above are not sufficient to reduce employee exposure to or below the PELs, the Contractor shall use them to reduce employee exposure to the lowest levels attainable by these controls and shall supplement them by the use of respiratory protection that complies with paragraph, RESPIRATORY PROTECTION PROGRAM.

3.6.3 Unacceptable Practices

The following work practices and engineering controls shall not be used for work related to asbestos or for work which disturbs ACM, regardless of measured levels of asbestos exposure or the results of initial exposure assessments:

a. High-speed abrasive disc saws that are not equipped with point of cut ventilator or enclosures with HEPA filtered exhaust air.

b. Compressed air used to remove asbestos, or materials containing asbestos, unless the compressed air is used in conjunction with an enclosed ventilation system designed to capture the dust cloud created by the compressed air.

c. Dry sweeping, shoveling, or other dry clean-up of dust and debris containing ACM.

d. Employee rotation as a means of reducing employee exposure to asbestos.

3.6.4 Class I Work Procedures

In addition to requirements of paragraphs Mandated Practices and Control Methods, the following engineering controls and work practices shall be used:

a. A Competent Person shall supervise the installation and operation of the control system.

b. For jobs involving the removal of more than 25 feet or 10 square feet of TSI or surfacing material, the Contractor shall place critical barriers over all openings to the regulated area.

c. HVAC systems shall be isolated in the regulated area by sealing with a double layer of plastic or air-tight rigid covers.

d. Impermeable dropcloths (6 mil or greater thickness) shall be placed on surfaces beneath all removal activity.

e. Objects within the regulated area shall be handled as specified in paragraph OBJECTS.

f. Where a negative exposure assessment has not been provided or where exposure monitoring shows the PEL was exceeded, the regulated area shall be ventilated to move contaminated air away from the employee's breathing zone toward a HEPA unit or collection device.

3.6.5 Specific Control Methods for Class I Work

In addition to requirements of paragraph Class I Work Procedures, Class I asbestos work shall be performed using the control methods identified in the subparagraphs below.

3.6.5.1 Negative Pressure Enclosure (NPE) System

Not Used

3.6.5.2 Glovebag Systems

Not Used

3.6.5.3 Mini-Enclosures

Not Used

3.6.5.4 Wrap and Cut Operation

Not Used

3.6.6 Class II Work

In addition to the requirements of paragraphs Mandated Practices and Control Methods, the following engineering controls and work practices shall be used:

a. A Competent Person shall supervise the work.

b. For indoor work, critical barriers shall be placed over all openings to the regulated area.

c. Impermeable dropcloths shall be placed on surfaces beneath all removal activity.

3.6.7 Specific Control Methods for Class II Work

In addition to requirements of paragraph Class II Work, Class II work shall be performed using the following methods:

3.6.7.1 Vinyl and Asphalt Flooring Materials

Not Used

3.6.7.2 Roofing Material

Not Used

3.6.7.3 Cementitious Siding and Shingles or Transite Panels

When removing cementitious asbestos-containing siding, shingles or transite panels the Contractor shall use the following practices as shown in RESPONSE ACTION DETAIL SHEET 81. Intentionally cutting, abrading or breaking siding, shingles, or transite panels is prohibited. Each panel or shingle shall be sprayed with amended water prior to removal. Nails shall be cut with flat, sharp instruments. Unwrapped or unbagged panels or shingles shall be immediately lowered to the ground via covered dust-tight chute, crane or hoist, or placed in an impervious waste bag or wrapped in plastic sheeting and lowered to the ground no later than the end of the work shift.

3.6.7.4 Gaskets

Not Used

3.6.7.5 Other Class II Jobs

Not Used

3.6.8 Specific Control Methods for Class III Work

Class III asbestos work shall be conducted using engineering and work practice controls which minimize the exposure to employees performing the asbestos work and to bystander employees. The work shall be performed using wet methods and, to the extent feasible, using local exhaust ventilation.

The Contractor shall use impermeable dropcloths and shall isolate the operation, using mini-enclosures or glovebag systems, where the disturbance involves drilling, cutting, abrading, sanding, chipping, breaking, or sawing of TSI or surfacing material.

3.6.9 Specific Control Methods for Class IV Work

Class IV jobs shall be conducted using wet methods, HEPA vacuums, and prompt clean-up of debris containing ACM. Employees cleaning up debris and waste in a regulated area where respirators are required shall wear the selected respirators.

3.6.10 Alternative Methods for Roofing Materials and Asphaltic Wrap

Not Used

3.6.11 Cleaning After Asbestos Removal

After completion of all asbestos removal work, surfaces from which ACM has been removed shall be wet wiped or sponged clean, or cleaned by some equivalent method to remove all visible residue. Run-off water shall be collected and filtered through a dual filtration system. A first filter shall be provided to remove fibers 20 micrometers and larger, and a final filter provided that removes fibers 5 micrometers and larger. After the gross amounts of asbestos have been removed from every surface, remaining visible accumulations of asbestos on floors shall be collected using plastic shovels, rubber squeegees, rubber dustpans, and HEPA vacuum cleaners as appropriate to maintain the integrity of the regulated area. When TSI and surfacing material has been removed, workmen shall use HEPA vacuum cleaners to vacuum every surface. Surfaces or locations which could harbor accumulations or residual asbestos dust shall be checked after vacuuming to verify that no asbestos-containing material remains; and shall be re-vacuumed as necessary to remove the ACM.

3.6.12 Class I Asbestos Work Response Action Detail Sheets

Not Used

3.6.13 Class II Asbestos Work Response Action Detail Sheets

The following Class II Asbestos Work Response Action Detail Sheet is specified on Table 1 for each individual work task to be performed:

Asbestos Cement Siding: See Sheet 81

3.6.14 Abatement of Asbestos Contaminated Soil

Not Used

3.6.15 Enclosure of ACM

Not Used

3.6.16 Encapsulation of ACM

Prior to applying any encapsulant, the entire surface area shall be inspected for loose, or damaged asbestos material:

Penetrating Encapsulation: Before penetrating encapsulation is applied, asbestos removal work in the area shall be complete and the surfaces to be encapsulated shall be free of loose or damaged material. Substrate shall be evaluated before application to ensure that the encapsulant will not cause the substrate to fail in any way. Acoustical wall and ceiling plaster surfaces shall be encapsulated in accordance with manufacturer's recommendations. Plug samples shall be taken to determine if full penetration has been achieved.

3.6.17 Combination Encapsulation of Acoustical Wall and Ceiling Plaster

Not Used

3.6.18 Response Action Detail Sheets for Repair of Class I Materials

Not Used

3.6.19 Response Action Detail Sheets for Repair of Class II Materials

Not Used

3.6.20 Encasement of ACM

Not Used

3.6.21 Sealing Contaminated Items Designated for Disposal

Not Used

3.7 FINAL CLEANING AND VISUAL INSPECTION

Upon completion of abatement, the regulated area shall be cleaned by collecting, packing, and storing all gross contamination; see SET-UP DETAIL SHEETS 9 and 14. A final cleaning shall be performed using HEPA vacuum and wet cleaning of all exposed surfaces and objects in the regulated area. Upon completion of the cleaning, the Contractor shall conduct a visual pre-inspection of the cleaned area in preparation for a final inspection before final air clearance monitoring and recleaning, as necessary. Upon completion of the final cleaning, the Contractor and the Contracting Officer shall conduct a final visual inspection of the cleaned regulated area in accordance with ASTM E 1368 and document the results on the Final Cleaning and Visual Inspection as specified on the SET-UP DETAIL SHEET 19. If the Contracting Officer rejects the clean regulated area as not meeting final cleaning requirements, the Contractor shall reclean as necessary and have a follow-on inspection conducted with the Contracting Officer. Recleaning and follow-up reinspection shall be at the Contractor's expense.

3.8 LOCKDOWN

Prior to removal of plastic barriers and after clean-up of gross contamination and final visual inspection, a post removal (lockdown) encapsulant shall be spray applied to surfaces in the regulated area.

3.9 EXPOSURE ASSESSMENT AND AIR MONITORING

3.9.1 General Requirements For Exposure

Exposure assessment, air monitoring and analysis of airborne concentration of asbestos fibers shall be performed in accordance with 29 CFR 1926, Section .1101, the Contractor's air monitoring plan, and as specified. Personal exposure air monitoring (collected at the breathing zone) that is representative of the exposure of each employee who is assigned to work within a regulated area shall be performed by the Contractor's Designated IH. Breathing zone samples shall be taken for at least 25 percent of the workers in each shift, or a minimum of 2, whichever is greater. Air monitoring results at the 95 percent confidence level shall be calculated as shown in Table 2 at the end of this section. Preabatement and abatement environmental air monitoring shall be performed by the Contractor's Designated IH. Final clearance environmental air monitoring is not required for exterior abatement work in this case. Results of breathing zone samples shall be posted at the job site and made available to the Contracting Officer. The Contractor shall maintain a fiber concentration inside a regulated area less than or equal to 0.1 f/cc expressed as an 8 hour, time-weighted average (TWA) during the conduct of the asbestos abatement. If fiber concentration rises above 0.1 f/cc, work procedures shall be investigated with the Contracting Officer to determine the cause. At the discretion of the Contracting Officer, fiber concentration may exceed 0.1 f/cc but shall not exceed 1.0 f/cc expressed as an 8-hour TWA. The Contractor's workers shall not be exposed to an airborne fiber concentration in excess of 1.0 f/cc, as averaged over a sampling period of 30 minutes. Should either an environmental concentration of 1.0 f/cc expressed as an 8-hour TWA or a personal excursion concentration of 1.0 f/cc expressed as a 30-minute sample occur inside a regulated work area, the Contractor shall stop work immediately, notify the Contracting Officer, and implement additional engineering controls and work practice controls to reduce airborne fiber levels below prescribed limits in the work area. Work shall not restart until authorized by the Contracting Officer.

3.9.2 Initial Exposure Assessment

The Contractor's Designated IH shall conduct an exposure assessment immediately before or at the initiation of an asbestos abatement operation to ascertain expected exposures during that operation. The assessment shall be completed in time to comply with the requirements which are triggered by exposure data or the lack of a negative exposure assessment, and to provide information necessary to assure that all control systems planned are appropriate for that operation. The assessment shall take into consideration both the monitoring results and all observations, information or calculations which indicate employee exposure to asbestos, including any previous monitoring conducted in the workplace, or of the operations of the Contractor which indicate the levels of airborne asbestos likely to be encountered on the job. [For Class I asbestos work, until the employer conducts exposure monitoring and documents that employees on that job will not be exposed in excess of PELs, or otherwise makes a negative exposure assessment, the Contractor shall presume that employees are exposed in excess of the PEL-TWA and PEL-Excursion Limit.]

3.9.3 Negative Exposure Assessment

The Contractor shall provide a negative exposure assessment for the specific asbestos job which will be performed. The negative exposure assessment shall be provided within 2 days of the initiation of the project and conform to the following criteria:

a. Objective Data: Objective data demonstrating that the product or material containing asbestos minerals or the activity involving such product or material cannot release airborne fibers in

concentrations exceeding the PEL-TWA and PEL-Excursion Limit under those work conditions having the greatest potential for releasing asbestos.

b. Prior Asbestos Jobs: Where the Contractor has monitored prior asbestos jobs for the PEL and the PEL-Excursion Limit within 12 months of the current job, the monitoring and analysis were performed in compliance with asbestos standard in effect; the data were obtained during work operations conducted under workplace conditions closely resembling the processes, type of material, control methods, work practices, and environmental conditions used and prevailing in the Contractor's current operations; the operations were conducted by employees whose training and experience are no more extensive than that of employees performing the current job; and these data show that under the conditions prevailing and which will prevail in the current workplace, there is a high degree of certainty that the monitoring covered exposure from employee exposures will not exceed the PEL-TWA and PEL-Excursion Limit.

c. Initial Exposure Monitoring: The results of initial exposure monitoring of the current job, made from breathing zone air samples that are representative of the 8-hour PEL-TWA and 30-minute short-term exposures of each employee. The monitoring covered exposure from operations which are most likely during the performance of the entire asbestos job to result in exposures over the PELs.

3.9.4 Preabatement Environmental Air Monitoring

Preabatement environmental air monitoring shall be established 1 day prior to the start of demolition in order to determine background concentrations. As a minimum, preabatement air samples shall be collected using NIOSH Pub No. 84-100 Method 7400, PCM at these locations: outside the building inside the regulated work area; outside the regulated area perimeter; and inside the building. The PCM samples shall be analyzed within 24 hours; and if any result in fiber concentration greater than 0.01 f/cc.

3.9.5 Environmental Air Monitoring During Abatement

Until an exposure assessment is provided to the Contracting Officer, environmental air monitoring shall be conducted at locations and frequencies that will accurately characterize any evolving airborne asbestos fiber concentrations. The assessment shall demonstrate that the product or material containing asbestos minerals, or the abatement involving such product or material, cannot release airborne asbestos fibers in concentrations exceeding 0.01 f/cc as a TWA under those work conditions having the greatest potential for releasing asbestos. The monitoring shall be at least once per shift at locations including, but not limited to, close to the work inside a regulated area; preabatement sampling locations; outside entrances to a regulated area; representative locations outside of the perimeter of a regulated area. If the sampling outside regulated area shows airborne fiber levels have exceeded background or 0.01 f/cc, whichever is greater, work shall be stopped immediately, and the Contracting Officer notified. The condition causing the increase shall be corrected. Work shall not restart until authorized by the Contracting Officer.

3.9.6 Final Clearance Air Monitoring

Final clearance air monitoring is not required for exterior work.

3.9.7 Air-Monitoring Results and Documentation

Air sample fiber counting shall be completed and results provided within 24 hours (breathing zone samples), and 48 hours (environmental/clearance monitoring) after completion of a sampling period. The Contracting Officer shall be notified immediately of any airborne levels of asbestos fibers in excess of established requirements. Written sampling results shall be provided within 5 working days of the date of collection. The written results shall be signed by testing laboratory analyst, testing laboratory principal and the Contractor's Designated IH. The air sampling results shall be documented on a Contractor's daily air monitoring log. The daily air monitoring log shall contain the following information for each sample:

a. Sampling and analytical method used;

b. Date sample collected;

c. Sample number;

d. Sample type: BZ = Breathing Zone (Personal), P = Preabatement, E = Environmental, C = Abatement Clearance;

e. Location/activity/name where sample collected;

f. Sampling pump manufacturer, model and serial number, beginning flow rate, end flow rate, average flow rate (L/min);

g. Calibration date, time, method, location, name of calibrator, signature;

h. Sample period (start time, stop time, elapsed time (minutes);

i. Total air volume sampled (liters);

j. Sample results (f/cc and S/mm square) if EPA methods are required for final clearance;

k. Laboratory name, location, analytical method, analyst, confidence level. In addition, the printed name and a signature and date block for the Industrial Hygienist who conducted the sampling and for the Industrial Hygienist who reviewed the daily air monitoring log verifying the accuracy of the information.

3.10 CLEARANCE CERTIFICATION

When asbestos abatement is complete, ACM waste is removed from the regulated areas, and final clean-up is completed, the Contracting Officer will certify the areas as safe before allowing the warning signs and boundary warning tape to be removed. After final clean-up and acceptable airborne concentrations are attained, the Contractor shall remove all pre-filters on the building HVAC system and provide new pre-filters. The Contractor shall re-established in proper working order any mechanical or electrical systems secured as a result of abatement. The Contractor and the Contracting Officer shall visually inspect all surfaces within the containment for residual material or accumulated debris. The Contractor shall reclean all areas showing dust or residual materials. The Contracting Officer will certify in writing that the area is safe before unrestricted entry is permitted. The Government will have the option to perform monitoring to certify the areas are safe before entry is permitted.

3.11 CLEANUP AND DISPOSAL

3.11.1 Title to ACM Materials

ACM material resulting from abatement work, except as specified otherwise, shall become the property of the Contractor and shall be disposed of as specified and in accordance with applicable federal, state and local regulations.

3.11.2 Collection and Disposal of Asbestos

All ACM waste including contaminated wastewater filters, scrap, debris, bags, containers, equipment, and asbestos contaminated clothing, shall be collected and placed in leak-tight containers such as double plastic bags (see DETAIL SHEET 9A); sealed double wrapped polyethylene sheet (see DETAIL 9B); sealed fiberboard boxes (see DETAIL SHEET 9C); or other approved containers. Waste within the containers shall be wetted in case the container is breeched. Asbestos-containing waste shall be disposed of [at an EPA, state and local approved asbestos landfill] [off Government property]. For temporary storage, sealed impermeable containers shall be stored in an asbestos waste load-out unit or in a storage/transportation conveyance (i.e., dumpster, roll-off waste boxes, etc.) in a manner acceptable to and in an area assigned by the Contracting Officer. Procedure for hauling and disposal shall comply with 40 CFR 61, Subpart M, state, regional, and local standards.

3.11.3 Scale Weight Measurement

Scales used for measurement shall be public scales. Weighing shall be at a point nearest the work at which a public scale is available. Scales shall be standard truck scales of the beam type; scales shall be equipped with the type registering beam and an "over and under" indicator; and shall be capable of accommodating the entire vehicle. Scales shall be tested, approved and sealed by an inspector of the State of Washington.

3.11.4 Weigh Bill and Delivery Tickets

Copies of weigh bills and delivery tickets shall be submitted to the Contracting Officer during the progress of the work. The Contractor shall furnish the Contracting Officer scale tickets for each load of ACM weighed and certified. These tickets shall include tare weight; identification mark for each vehicle weighed; and date, time and location of loading and unloading. Tickets shall be furnished at the point and time individual trucks arrive at the worksite. A master log of all vehicle loading shall be furnished for each day of loading operations. Before the final statement is allowed, the Contractor shall file with the Contracting Officer certified weigh bills and/or certified tickets and manifests of all ACM actually disposed by the Contractor for this contract.

3.11.5 Asbestos Waste Shipment Record

The Contractor shall complete and provide the Contracting Officer final completed copies of the Waste Shipment Record for all shipments of waste material as specified in 40 CFR 61, Subpart M and other required state waste manifest shipment records, within 3 days of delivery to the landfill. Each Waste Shipment Record shall be signed and dated by the Contractor, the waste transporter, and disposal facility operator.

TABLE 1

INDIVIDUAL WORK TASK DATA ELEMENTS

Sheet 1 of 1

There is a separate data sheet for each individual work task.

1. WORK TASK DESIGNATION NUMBER 1
2. LOCATION OF WORK TASK: Exterior siding
3. BRIEF DESCRIPTION OF MATERIAL TO BE ABATED: Cement Asbestos Tile

   a. Type of Asbestos Unknown
   b. Percent asbestos content Unknown

4. OSHA ASBESTOS CLASS DESIGNATION FOR WORK TASK: Class II
5. EPA NESHAP FRIABILITY DESIGNATION FOR WORK TASK
   Friable _____ Non-friable Category I __XX__
   Non-friable Category II_____
7. FORM _____ and CONDITION OF ACM: GOOD___XX_ FAIR_____ POOR_____
8. QUANTITY: LINEAR FT._____, SQUARE FT. 900
9. RESPONSE ACTION DETAIL SHEET NUMBER FOR WORK TASK: 81
10. SET-UP DETAIL SHEET NUMBERS
    FOR WORK TASK: 9A, 9B, 9C, 10, 11, 14, 19

TABLE 2

FORMULA FOR CALCULATION OF THE 95 PERCENT CONFIDENCE LEVEL
(Reference: NIOSH 7400)

Fibers/cc(01.95 percent CL) = X + [(X) * (1.645) * (CV)]

Where: X = ((E)(AC))/((V)(1000))

E = ((F/Nf) - (B/Nb))/Af

CV = The precision value; 0.45 shall be used unless the analytical laboratory provides the Contracting Officer with documentation (Round Robin Program participation and results) that the laboratory's precision is better.

AC = Effective collection area of the filter in square millimeters

V = Air volume sampled in liters

E = Fiber density on the filter in fibers per square millimeter

F/Nf = Total fiber count per graticule field

B/Nb = Mean field blank count per graticule field

Af = Graticule field area in square millimeters

TWA = C1/T1 + C2/T2 = Cn/Tn

Where: C = Concentration of contaminant

T = Time sampled.

CERTIFICATE OF WORKER'S ACKNOWLEDGMENT

PROJECT NAME _____ CONTRACT NO. _____
PROJECT ADDRESS _____
CONTRACTOR FIRM NAME _____
EMPLOYEE'S NAME _____,_____,_____,
(Print) (Last) (First) (MI)

Social Security Number: _____-_____-_____,

WORKING WITH ASBESTOS CAN BE DANGEROUS. INHALING ASBESTOS FIBERS HAS BEEN LINKED WITH TYPES OF LUNG DISEASE AND CANCER. IF YOU SMOKE AND INHALE ASBESTOS FIBERS, THE CHANCE THAT YOU WILL DEVELOP LUNG CANCER IS GREATER THAN THAT OF THE NONSMOKING PUBLIC.

Your employer's contract for the above project requires that you be provided and you complete formal asbestos training specific to the type of work you will perform and project specific training; that you be supplied with proper personal protective equipment including a respirator, that you be trained in its use; and that you receive a medical examination to evaluate your physical capacity to perform your assigned work tasks, under the environmental conditions expected, while wearing the required personal protective equipment. These things are to be done at no cost to you. By signing this certification, you are acknowledging that your employer has met these obligations to you. The Contractor's Designated Industrial Hygienist will check the block(s) for the type of formal training you have completed. Review the checked blocks prior to signing this certification.

FORMAL TRAINING:
_____ a. For Competent Persons and Supervisors: I have completed EPA's Model Accreditation Program (MAP) training course, "Contractor/Supervisor", that meets this State's requirements.

b. For Workers:
_____ (1) For OSHA Class I work: I have completed EPA's MAP training course, "Worker", that meets this State's requirements.
_____ (2) For OSHA Class II work (where there will be abatement of more than one type of Class II materials, i.e., roofing, siding, floor tile, etc.): I have completed EPA's MAP training course, "Worker", that meets this State's requirements.
(3) For OSHA Class II work (there will only be abatement of one type of Class II material):
_____ (a) I have completed an 8-hour training class on the elements of 29 CFR 1926, Section .1101(k)(9)(viii), in addition to the specific work practices and engineering controls of 29 CFR 1926, Section .1101(g) and hands-on training.
_____ (b) I have completed EPA's MAP training course, "Worker", that meets this State's requirements.
_____ (4) For OSHA Class III work: I have completed at least a 16-hour course consistent with EPA requirements for training of local education agency maintenance and custodial staff at 40 CFR 763, Section .92(a)(2) and the elements of 29 CFR 1926, Section .1101(k)(9)(viii), in addition to the specific work practices and engineering controls at 29 CFR 1926, Section .1101, and hands-on training.

_____ (5) For OSHA Class IV work: I have completed at least a 2-hr course consistent with EPA requirements for training of local education agency maintenance and custodial staff at 40 CFR 763, (a)(1), and the elements of 29 CFR 1926, Section .1101(k)(9)(viii), in addition to the specific work practices and engineering controls at 29 CFR 1926, Section .1101(g) and hands-on training.

_____ c. Workers, Supervisors and the Designated Competent Person: I have completed annual refresher training as required by EPA's MAP that meets this State's requirements.

PROJECT SPECIFIC TRAINING:
_____ I have been provided and have completed the project specific training required by this Contract. My employer's Designated Industrial Hygienist and Designated Competent Person conducted the training.

RESPIRATORY PROTECTION:
_____ I have been trained in accordance with the criteria in the Contractor's Respiratory Protection program. I have been trained in the dangers of handling and breathing asbestos dust and in the proper work procedures and use and limitations of the respirator(s) I will wear. I have been trained in and will abide by the facial hair and contact lens use policy of my employer.

RESPIRATOR FIT-TEST TRAINING:
_____ I have been trained in the proper selection, fit, use, care, cleaning,maintenance, and storage of the respirator(s) that I will wear. I have been fit-tested in accordance with the criteria in the Contractor's Respiratory Program and have received a satisfactory fit. I have been assigned my individual respirator. I have been taught how to properly perform positive and negative pressure fit-check upon donning negative pressure respirators each time.

MEDICAL EXAMINATION:
_____ I have had a medical examination within the last twelve months which was paid for by my employer. The examination included: health history, pulmonary function tests, and may have included an evaluation of a chest x-ray. A physician made a determination regarding my physical capacity to perform work tasks on the project while wearing personal protective equipment including a respirator. I was personally provided a copy and informed of the results of that examination. My employer's Industrial Hygienist evaluated the medical certification provided by the physician and checked the appropriate blank below. The physician determined that there:

_____ were no limitations to performing the required work tasks.
_____ were identified physical limitations to performing the required work tasks.

Date of the medical examination _____

Employee Signature _____ date _____
Contractor's Industrial
Hygienist Signature _____ date _____

END OF SECTION

ATTACHMENT

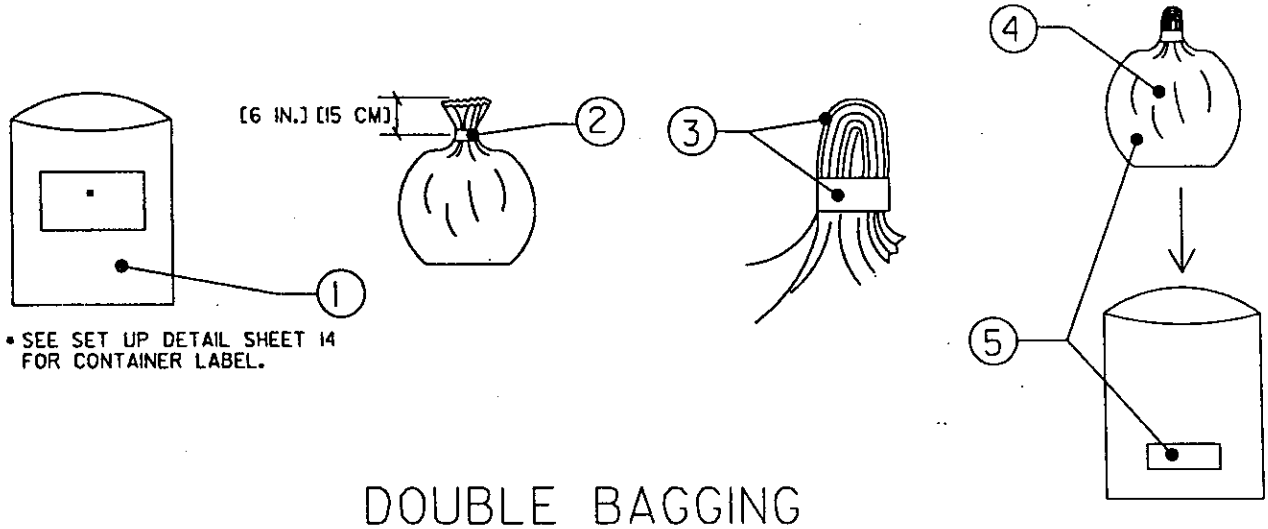

DOUBLE BAGGING

Containers—double bagging

1. Place the still-wet asbestos-containing and asbestos-contaminated material into a prelabled 6-mil polyethylene bag. Do not overfill. Do not use bag for asbestos-containing or asbestos-contaminated material that could puncture the bag. (See sheet 9C for packaging items that could puncture bags.)

2. Evacuate with HEPA vacuum, and seal collapsed bag by twisting top [6 in] [15 cm] closed and wrapping with a minimum of two layers of duct tape.

3. Twist top and fold over. Apply second wrap of duct tape.

4. Adequately wet clean outside of disposal bag by wet wiping, and take bag to the equipment and staging area.

5. Place bag inside a second prelabled 6-mil polyethylene bag.

6. Seal outer bag by repeating steps 2 and 3 above. Take bag to load-out unit; see sheet 20.

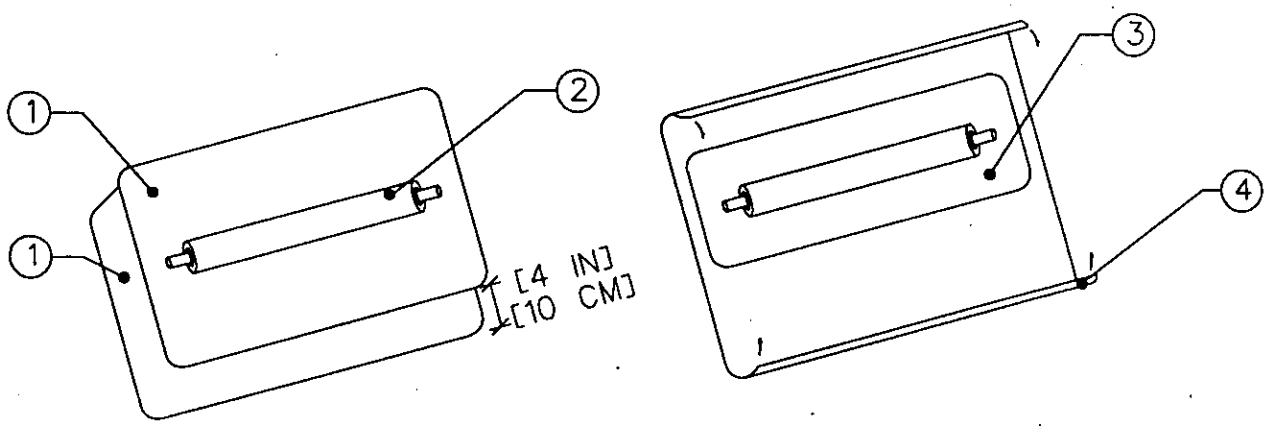

Containers—leak-tight wrapping

1. Place two layers of 6-mil polyethylene sheet on surface so that the bottom layer is offset [4 in] [10 cm] from the top layer.

2. Place the still-wet asbestos-containing or asbestos-contaminated material that is too large (boiler, vessel, pipe segment, etc.) to be placed in disposal bags on the top layer of polyethylene.

3. Wrap the top layer tightly around the contaminated material. Seal all edges of the top layer of sheeting with duct tape. Apply labels; see sheet 14.

4. Repeat procedure with bottom layer, including labeling. Take to load-out unit; see sheet 20.

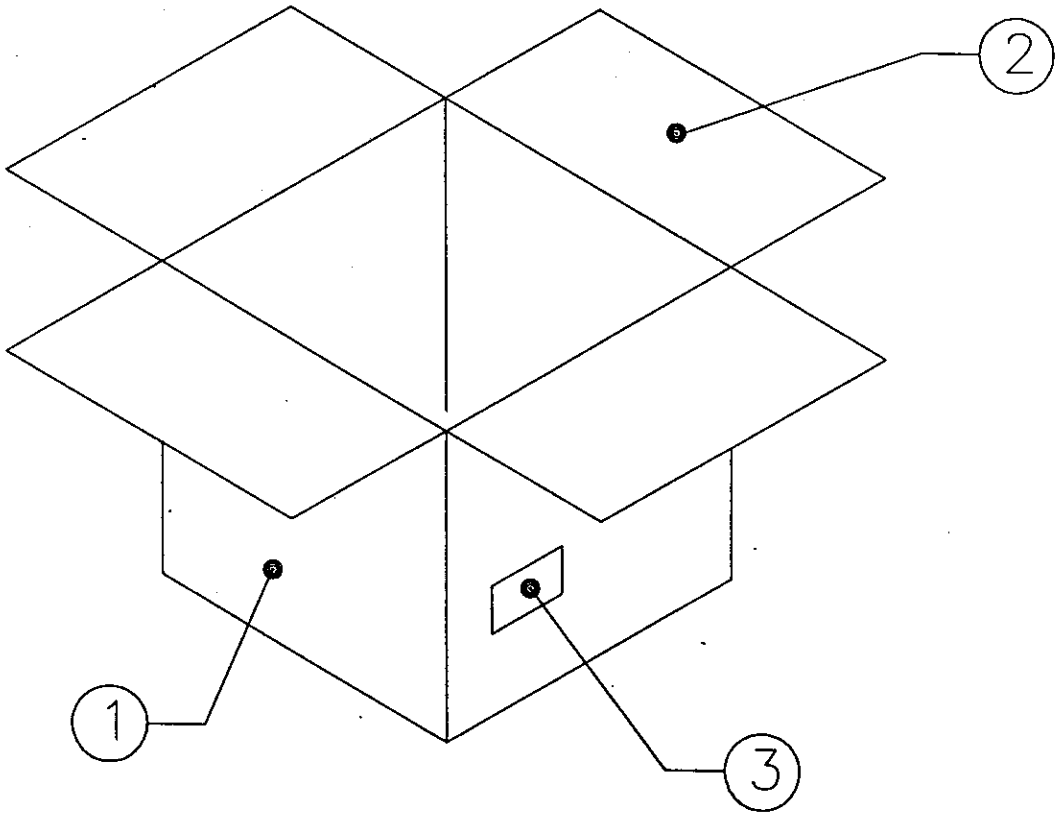

Containers—corrugated cardboard boxes

1. Place still-wet asbestos-containing or asbestos-contaminated material that could puncture disposal bags into heavy-duty corrugated cardboard boxes coated with plastic or wax that will retard deterioration from moisture.

2. Close flaps, and seal with duct tape.

3. Apply labels; see sheet 14. Place box into disposal bags; see sheet 9A. Take to load-out unit; see sheet 20.

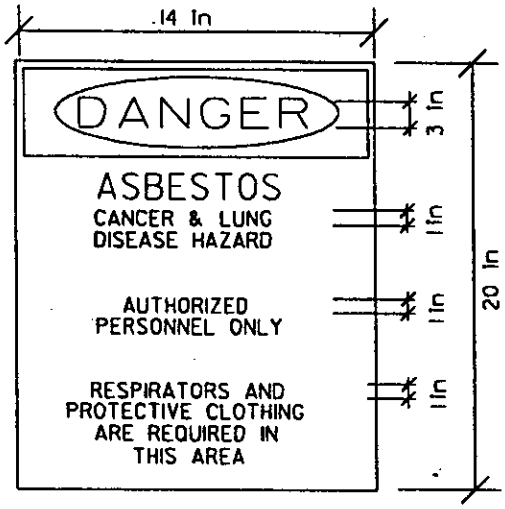

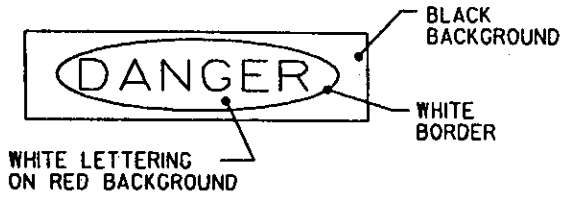

AREA WARNING SIGNS AND WARNING TAPE

DETAIL (011)

Area warning signs and warning tape

1. Provide and install [4 mil] [0.10 mm] polyethylene warning tape at locations shown on the abatement area plan.

2. Warning tape is to be attached to wood or metal posts at [10 ft] [300 cm] on center. Tape must be [3 ft] [100 cm] from ground.

3. Attach both warning signs at each entrance of the work area and at [33 yd] [30 m] on center where security fencing is installed.

4. Warning signs must be in English and other languages required by the contract.

5. Install at eye level.

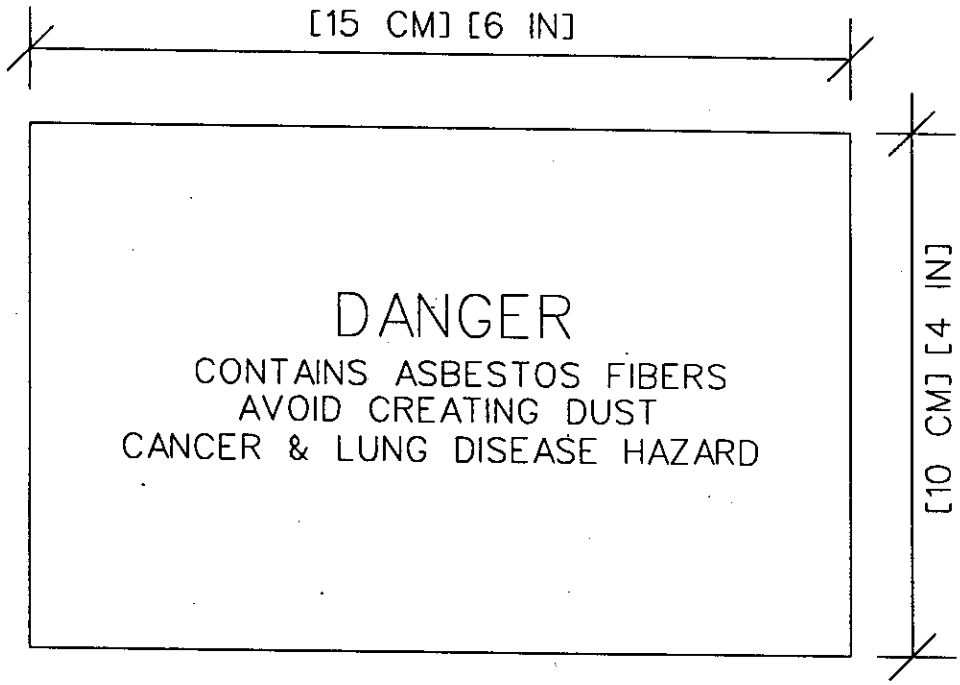

Disposal container label

Attach warning labels to each disposal container removed from abatement area.

Certification of Final Cleaning And Visual Inspection

Individual abatement task as identified in paragraph, Description of Work _____

In accordance with the cleaning and decontamination procedures specified in the Contractor's asbestos hazard abatement plan and this contract, the Contractor hereby certifies that he/she has thoroughly visually inspected the decontaminated regulated work area (all surfaces, including pipes, beams, ledges, walls, ceiling, floor, decontamination unit, etc.) in accordance with ASTM E1368, *Standard Practice for Visual Inspection of Asbestos Abatement Projects*, and has found no dust, debris, or asbestos-containing material residue.

BY: (Contractor's signature) _____ Date _____
Print name and title _____

(Contractor's Onsite Supervisor signature) _____ Date _____
Print name and title _____

(Contractor's Industrial Hygienist signature) _____ Date _____
Print name and title _____

Contracting Officer Acceptance or Rejection

The Contracting Officer hereby determines that the Contractor has performed final cleaning and visual inspection of the decontaminated regulated work area (all surfaces including pipes, beams, ledges, walls, ceiling, floor, decontamination unit, etc.) and by quality assurance inspection, finds the Contractor's final cleaning to be:

☐ Acceptable

☐ Unacceptable, Contractor instructed to reclean the regulated work area.

BY: Contracting Officer's Representative
Signature _____ Date _____
Print name and title _____

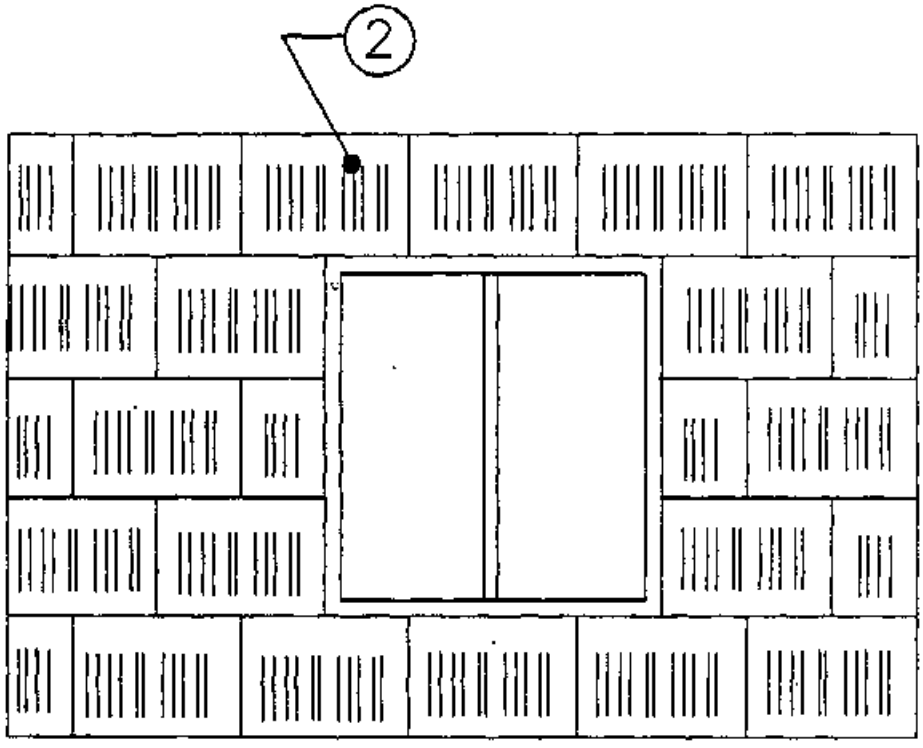

Removal of asbestos cement siding

1. No containment area is required. Establish boundaries of asbestos-regulated work area so that unauthorized entry is prevented; see sheet 11. Provide personal protection and decontamination facilities as specified in contractor's asbestos hazard abatement plan.

2. Wet mist siding with amended water, initially and during removal procedures.

3. Anchor 10-mil polyethylene sheeting below work area. Remove siding in a manner that will prevent crumbling, pulverizing, or reducing to powder during the removal procedure. NOTE: Normal breakage does not constitute crumbling, pulverizing, or reducing to powder.

4. Clean and HEPA vacuum all surfaces.

5. Inspect and reclean area as necessary.

6. Place all materials in Dumpster or other transport container lined with two layers of 6-mil polyethylene. Seal the joints and ends of each layer with duct tape; see sheet 9. Apply labels; see sheet 14. Other containers may be used; see sheet 9. Apply labels; see sheet 14.

7. Prepare area for final clearance.

8. Contractor and contracting officer will certify visual inspection of work area on sheet 19, *Certification of Final Cleaning and Visual Inspection*.

SECTION 13850

FIRE DETECTION AND ALARM SYSTEM, DIRECT CURRENT LOOP

1 PART 1 GENERAL

1.1 REFERENCES

The publications listed below form a part of this specification to the extent referenced. The publications are referred to in the text by basic designation only.

AMERICAN NATIONAL STANDARDS INSTITUTE (ANSI)

ANSI S3.41	(1990; R 1996) Audible Emergency Evacuation Signal

FACTORY MUTUAL ENGINEERING AND RESEARCH (FM)

FM P7825a	(1998) Approval Guide Fire Protection

INSTITUTE OF ELECTRICAL AND ELECTRONICS ENGINEERS (IEEE)

IEEE C62.41	(1991; R 1995) Surge Voltages in Low-Voltage AC Power Circuits

NATIONAL FIRE PROTECTION ASSOCIATION (NFPA)

NFPA 70	(1999) National Electrical Code
NFPA 72	(1996; Errata Oct 96, Dec 96; TIA 96-1, 96-2, 96-3) National Fire Alarm Code
NFPA 90A	(1996) Installation of Air Conditioning and Ventilating Systems
NFPA 1221	(1994) Installation, Maintenance and Use of Public Fire Service Communication Systems

UNDERWRITERS LABORATORIES (UL)

UL 6	(1997) Rigid Metal Conduit
UL 38	(1994; Rev Nov 1994)) Manually Actuated Signaling Boxes for Use with Fire-Protective Signaling Systems
UL 228	(1997) Door Closers-Holders, With or Without Integral Smoke Detectors

UL 268	(1996; Rev thru Jun 1998) Smoke Detectors for Fire Protective Signaling Systems
UL 268A	(1998) Smoke Detectors for Duct Applications
UL 464	(1996; Rev May 1997) Audible Signal Appliances
UL 521	(1993; Rev Oct 1994) Heat Detectors for Fire Protective Signaling Systems
UL 797	(1993; Rev thru Mar 1997) Electrical Metallic Tubing
UL 864	(1996) Control Units for Fire-Protective Signaling Systems
UL 1242	(1996; Rev Mar 1998) Intermediate Metal Conduit
UL 1971	(1995; Rev thru May 1997) Signaling Devices for the Hearing Impaired

1.2 GENERAL REQUIREMENTS

1.2.1 Standard Products

Material and equipment shall be the standard products of a manufacturer regularly engaged in the manufacture of the products for at least 2 years prior to bid opening. Equipment shall be supported by a service organization that can provide service within 24 hours of notification.

1.2.2 Nameplates

Major components of equipment shall have the manufacturer's name, address, type or style, voltage and current rating, and catalog number on a noncorrosive and nonheat-sensitive plate which is securely attached to the equipment.

1.2.3 Keys and Locks

Locks shall be keyed alike. Four keys for the system shall be provided.

1.2.4 Tags

Tags with stamped identification number shall be furnished for keys and locks.

1.2.5 Verification of Dimensions

After becoming familiar with details of the work, the Contractor shall verify dimensions in the field and shall advise the Contracting Officer of any discrepancy before performing the work.

1.2.6 Compliance

The fire detection and alarm system and the central reporting system shall be configured in accordance with NFPA 72; exceptions are acceptable as directed by the Contracting Officer. The equipment furnished shall be compatible and be UL listed, FM approved, or approved or listed by a nationally recognized testing laboratory in accordance with the applicable NFPA standards.

1.2.7 Qualifications

1.2.7.1 Engineer and Technician

a. Registered Professional Engineer with verification of experience and at least 4 years of current experience in the design of the fire protection and detection systems.

b. National Institute for Certification in Engineering Technologies (NICET) qualifications as an engineering technician in fire alarm systems program with verification of experience and current NICET certificate.

c. The Registered Professional Engineer may perform all required items under this specification. The NICET Fire Alarm Technician shall perform only the items allowed by the specific category of certification held.

1.2.7.2 Installer

The installing Contractor shall provide the following: NICET Fire Alarm Technicians to perform the installation of the system. A NICET Level 3 or 4 Fire Alarm Technician shall supervise the installation of the fire alarm system. NICET Level 2 or higher Fire Alarm Technician shall install and terminate fire alarm devices, cabinets and panels. An electrician or NICET Level 1 Fire Alarm Technician shall install conduit for the fire alarm system. The Fire Alarm technicians installing the equipment shall be factory trained in the installation, adjustment, testing, and operation of the equipment specified herein and on the drawings.

1.2.7.3 Design Services

Installations requiring designs or modifications of fire detection, fire alarm, or fire suppression systems shall require the services and review of a qualified fire protection engineer. For the purposes of meeting this requirement, a qualified fire protection engineer is defined as an individual meeting one of the following conditions:

a. An engineer having a Bachelor of Science or Masters of Science Degree in Fire Protection Engineering from an accredited university engineering program, plus a minimum of 2 years' work experience in fire protection engineering.

b. A registered professional engineer (P.E.) in fire protection engineering.

c. A registered PE in a related engineering discipline and member grade status in the National Society of Fire Protection Engineers.

d. An engineer with a minimum of 10 years' experience in fire protection engineering and member grade status in the National Society of Fire Protection Engineers

1.3 SYSTEM DESIGN

1.3.1 Operation

The fire alarm and detection system shall be a complete, supervised fire alarm system. The system shall be activated into the alarm mode by actuation of any alarm initiating device. The system shall remain in the alarm mode until the initiating device is reset and the fire alarm control panel is reset and restored to normal. Alarm initiating devices shall be connected to initiating device circuits (IDC), Style D, in accordance with NFPA 72. Alarm notification appliances shall be connected to notification appliance circuits (NAC), Style Z in accordance with NFPA 72. A looped conduit system shall be provided so that if the conduit and all conductors within are severed at any point, all IDC, or NAC will remain functional. The conduit loop requirement is not applicable to the signal transmission link from the local panels (at the protected premises) to the Supervising Station (fire station, fire alarm central communication center). Textual, audible, and visual appliances and systems shall comply with NFPA 72. Fire alarm system components requiring power, except for the control panel power supply, shall operate on 24 Volts dc.

1.3.2 Operational Features

The system shall have the following operating features:

a. Monitor electrical supervision of alarm IDC and NAC. Smoke detectors may have combined alarm initiating and power circuits.

b. Monitor electrical supervision of the primary power (ac) supply, battery voltage, placement of alarm zone module (card, PC board) within the control panel, and transmitter tripping circuit integrity.

c. A trouble buzzer and trouble light emitting diode (LED) to activate upon a single break, open, or ground fault condition which prevents the required normal operation of the system. The trouble signal shall also operate upon loss of primary power (ac) supply, low battery voltage, removal of alarm zone module (card, PC board), and disconnection of the circuit used for transmitting alarm signals off-premises. A trouble alarm silence switch shall be provided which will silence the trouble buzzer, but will not extinguish the trouble indicator LED. Subsequent trouble and supervisory alarms shall sound the trouble signal until silenced. After the system returns to normal operating conditions, the trouble buzzer shall again sound until the silencing switch returns to normal position, unless automatic trouble reset is provided.

d. A one person test mode. Activating an initiating device in this mode will activate an alarm for a short period of time, then automatically reset the alarm, without activating the transmitter during the entire process.

e. A transmitter disconnect switch to allow testing and maintenance of the system without activating the transmitter but providing a trouble signal when disconnected and a restoration signal when reconnected.

f. Evacuation alarm silencing switch which, when activated, will silence alarm devices, but will not affect the zone indicating LED/LCD nor the operation of the transmitter. This switch shall be over-ridden upon activation of a subsequent alarm from an unalarmed zone and the NAC devices will be activated.

g. Electrical supervision for circuits used for supervisory signal services (i.e., sprinkler systems, valves, etc.). Supervision shall detect any open, short, or ground.

h. Confirmation or verification modules for smoke detection initiating circuits. The modules shall interrupt the transmission of an alarm signal to the system control panel for a factory preset period. This interruption period shall be adjustable from 1 to 60 seconds and be factory set at 20 seconds. Immediately following the interruption period, a confirmation period shall be in effect during which time an alarm signal, if present, will be sent immediately to the control panel. Fire alarm devices, other than smoke detectors, will be prohibited on circuits controlled by confirmation or verification modules.

i. The fire alarm control panel shall provide supervised relays for HVAC shutdown. An override at the HVAC panel shall not be provided.

j. The fire alarm control panel shall provide the required modules to monitor and control the fire sprinkler system, or other fire protection extinguishing system.

k. Zones for alarm IDC and NAC shall be arranged as indicated on the contract drawings.

l. The fire alarm control panel shall be readily capable of future expansion and modification by qualified technicians. Examples of required changes are: adding or deleting devices or zones; changing system responses to particular input signals; programming certain input signals to activate auxiliary devices.

1.3.3 Alarm Functions

An alarm condition on a circuit shall automatically initiate the following functions:

a. Transmission signals over the station radio fire reporting system. The signals shall be as indicated on the control matrix.

b. Visual indications of the alarmed zones on the fire alarm control panel annunciator.

c. Continuous sounding or operation of alarm notification appliances throughout the building as required by ANSI S3.41.

f. Deactivation of the air handling units throughout the building.

1.3.4 Primary Power

Operating power shall be provided as required by paragraph Power Supply for the System. Transfer from normal to emergency power or restoration from emergency to normal power shall be fully

automatic and not cause transmission of a false alarm. Loss of ac power shall not prevent transmission of a signal via the fire reporting system upon operation of any initiating circuit.

1.3.5 Battery Backup Power

Battery backup power shall be through use of rechargeable, sealed-type storage batteries and battery charger.

1.3.6 Interface With Existing Fire Alarm Equipment

The equipment specified herein shall replace an existing configuration. The new equipment shall be connected to existing IDCs and NAC in the existing part of the building. New components shall be capable of merging with the existing configuration without degrading the performance of either system. The scope of the acceptance tests of paragraph Testing shall include aspects of operation that involve combined use of both new and existing portions of the final configuration.

1.3.7 Interface With Other Equipment

Interfacing components shall be furnished as required to connect to subsystems or devices which interact with the fire alarm system, such as supervisory or alarm contacts in suppression systems, operating interfaces for smoke control systems, door releases, etc.

1.4 TECHNICAL DATA AND COMPUTER SOFTWARE

Technical data and computer software (meaning technical data which relates to computer software) which is specifically identified in this project, and which may be defined/required in other specifications, shall be delivered in accordance with the CONTRACT CLAUSES, and in accordance with the Contract Data Requirements List, DD Form 1423. Technical data and computer software shall be turned over to maintenance personnel upon completion of the acceptance test. Data delivered shall be identified by reference to the particular specification paragraph against which it is furnished. Data to be submitted shall include complete system, equipment, and software descriptions. Descriptions shall show how the equipment will operate as a system to meet the performance requirements of this contract. The data package shall also include the following:

(1) Identification of programmable portions of system equipment and capabilities.

(2) Description of system revision and expansion capabilities and methods of implementation detailing both equipment and software requirements.

(3) Provision of operational software data on all modes of programmable portions of the fire alarm and detection system.

(4) Description of Fire Alarm Control Panel equipment operation.

(5) Description of auxiliary and remote equipment operations.

(6) Library of application software.

(7) Operation and maintenance manuals described under SD-19 in the SUBMITTALS paragraph.

1.5 SUBMITTALS

Government approval is required for submittals with a "GA" designation; submittals having an "FI0" designation are for information only. The following shall be submitted in accordance with Section 01330 SUBMITTAL PROCEDURES:

SD-01 Data

Storage Batteries; FIO.

Substantiating battery calculations for supervisory and alarm power requirements. Ampere-hour requirements for each system component and each panel component, and the battery recharging period shall be included.

Voltage Drop; FIO.

Voltage drop calculations for notification appliance circuits to indicate that sufficient voltage is available for proper appliance operation.

Spare Parts; FIO.

Spare parts data for each different item of material and equipment specified, not later than 3 months prior to the date of beneficial occupancy. Data shall include a complete list of parts and supplies with the current unit prices and source of supply and a list of the parts recommended by the manufacturer to be replaced after 1 year of service.

Technical Data and Computer Software; GA.

Technical data which relates to computer software.

SD-04 Drawings

Fire Alarm Reporting System; GA.

Detail drawings, prepared and signed by a Registered Professional Engineer or a NICET Level 3 or 4 Fire Alarm Technician, consisting of a complete list of equipment and material, including manufacturer's descriptive and technical literature, catalog cuts, and installation instructions. Note that the contract drawings show layouts based on typical detectors. The Contractor shall check the layout based on the actual detectors to be installed and make any necessary revisions in the detail drawings. The detail drawings shall also contain complete wiring and schematic diagrams for the equipment furnished, equipment layout, and any other details required to demonstrate that the system has been coordinated and will properly function as a unit. Detailed point-to-point wiring diagram shall be prepared and signed by a Registered Professional Engineer or a NICET Level 3 or 4 Fire Alarm Technician showing points of connection. Diagram shall include connections between system devices, appliances, control panels, supervised devices, and equipment that is activated or controlled by the panel.

SD-06 Instructions

Training; GA.

Lesson plans, operating instructions, maintenance procedures, and training data, furnished in manual format, for the training courses. The operations training shall familiarize designated government personnel with proper operation of the fire alarm system. The maintenance training course shall provide the designated government personnel adequate knowledge required to diagnose, repair, maintain, and expand functions inherent to the system. The instructions shall include the information provided in paragraph TECHNICAL DATA AND COMPUTER SOFTWARE.

SD-08 Statements

Testing; FIO.

Detailed test procedures, prepared and signed by a Registered Professional Engineer or a NICET Level 3 or 4 Fire Alarm Technician, for the fire detection and alarm system 60 days prior to performing system tests.

SD-09 Reports

Testing; GA.

Test reports, in booklet form, showing field tests performed to prove compliance with the specified performance criteria, upon completion and testing of the installed system. Each test report shall document readings, test results and indicate the final position of controls. The Contractor shall include the NFPA 72 Certificate of Completion and NFPA 72 Inspection and Testing Form, with the appropriate test reports.

SD-13 Certificates

Equipment; FIO.

Certified copies of current approvals or listings issued by an independent test lab if not listed by UL, FM or other nationally recognized testing laboratory, showing compliance with specified NFPA standards.

Qualifications; FIO.

Proof of qualifications for required personnel. The installer shall submit proof of experience for the Professional Engineer, fire alarm technician, and the installing company.

SD-19 Operation and Maintenance Manuals

Technical Data and Computer Software; FIO.

Six copies of operating instructions outlining step-by-step procedures required for system startup, operation, and shutdown. The instructions shall include the manufacturer's name, model number, service manual, parts list, and complete description of equipment and their basic operating features. Six copies of maintenance instructions listing routine maintenance procedures, possible breakdowns and repairs,

and troubleshooting guide. The instructions shall include conduit layout, equipment layout and simplified wiring, and control diagrams of the system as installed. The instructions shall include the information provided in paragraph TECHNICAL DATA AND COMPUTER SOFTWARE. The instructions shall include complete procedures for system revision and expansion, detailing both equipment and software requirements. Original and backup copies of all software delivered for this project shall be provided, on each type of media utilized. Instructions shall be approved prior to training.

1.6 DELIVERY AND STORAGE

Equipment delivered and placed in storage shall be stored with protection from the weather, humidity and temperature variation, dirt, dust, and any other contaminants.

2 PART 2 PRODUCTS

2.1 CONTROL PANEL

Control panel shall comply with the applicable requirements of UL 864. Panel shall be modular, installed in a surface mounted steel cabinet with hinged door and cylinder lock. Control panel shall be a clean, uncluttered, and orderly assembled panel containing components and equipment required to provide the specified operating and supervisory functions of the system. The panel shall have prominent rigid plastic, phenolic or metal identification plates for LEDs, zones, controls, meters, fuses, and switches. Nameplates for fuses shall also include ampere rating. Separate alarm and trouble LEDs shall be provided for each zone alarm. These LEDs shall be located on the exterior of the cabinet door or be visible through the cabinet door. Control panel switches shall be within the locked cabinet. A suitable means (single operation) shall be provided for testing the control panel visual indicating devices (meters or LEDs). Meters and LEDs shall be plainly visible when the cabinet door is closed. Signals and LEDs shall be provided to indicate by zone any alarm, supervisory or trouble condition on the system. Each IDC shall be powered and supervised so that a signal on one zone does not prevent the receipt of signals from other zones. Loss of power, including batteries, shall not require the reloading of a program. Upon restoration of power, startup shall be automatic, and shall not require any manual operation. The loss of primary power or the sequence of applying primary or emergency power shall not affect the transmission of alarm, supervisory or trouble signals. Visual annunciators shall be provided for each active zone and spare zone. Two spare zones shall be provided as shown on the drawing. Each LED shall provide specific identification of the zone by means of a permanently attached rigid plastic, phenolic, or metal sign with either raised or engraved letters. Zone identification shall consist of a word description of the zone. A stored history of all events shall be available through the LCO screen without the use of special programming or software. Cabinets shall be provided with ample gutter space to allow proper clearance between the cabinet and live parts of the panel equipment. If more than one modular unit is required to form a control panel, the units shall be installed in a single cabinet large enough to accommodate units. Cabinets shall be painted red.

2.1.1 Circuit Connections

Circuit conductors entering or leaving the panel shall be connected to screw-type terminals with each conductor and terminal marked for identification.

2.1.2 System Expansion and Modification Capabilities

Any equipment and software needed by qualified technicians to implement future changes to the fire alarm system shall be provided as part of this contract.

2.2 STORAGE BATTERIES

Storage batteries shall be provided and shall be 24 Vdc sealed, lead-calcium type requiring no additional water. The batteries shall have ample capacity, with primary power disconnected, to operate the fire alarm system for a period of 72 hours. Following this period of battery operation, the batteries shall have ample capacity to operate all components of the system, including all alarm signaling devices in the total alarm mode for a minimum period of 15 minutes. Batteries shall be located in a separate battery cabinet. Batteries shall be provided with overcurrent protection in accordance with NFPA 72. Separate battery cabinets shall have a lockable, hinged cover similar to the fire alarm panel. The lock shall be keyed the same as the fire alarm control panel. Cabinets shall be painted to match the fire alarm control panel.

2.3 BATTERY CHARGER

Battery charger shall be completely automatic, 24 Vdc with high/low charging rate, capable of restoring the batteries from full discharge (18 Volts dc) to full charge within 48 hours. A pilot light indicating when batteries are manually placed on a high rate of charge shall be provided as part of the unit assembly, if a high rate switch is provided. Charger shall be located in control panel cabinet or in a separate battery cabinet.

2.4 MANUAL FIRE ALARM STATIONS

Manual fire alarm stations shall conform to the applicable requirements of UL 38. Manual stations shall be connected into signal line circuits. Stations shall be installed on semi-flush mounted outlet boxes. Manual stations shall be mounted at 1400 mm. Stations shall be double action type. Stations shall be finished in red, with raised letter operating instructions of contrasting color. Stations requiring the breaking of glass or plastic panels for operation are not acceptable. Stations employing glass rods are not acceptable. The use of a key shall be required to reset the station. Gravity or mercury switches are not acceptable. Switches and contacts shall be rated for the voltage and current upon which they operate. Stations shall have a separate screw terminal for each conductor. Surface mounted boxes shall be matched and painted the same color as the fire alarm manual stations.

2.5 FIRE DETECTING DEVICES

Fire detecting devices shall comply with the applicable requirements of NFPA 72, NFPA 90A, UL 268, UL 268A, and UL 521. The detectors shall be provided as indicated. Detector base shall have screw terminals for making connections. No solder connections will be allowed. Detectors located in concealed locations (above ceiling, raised floors, etc.) shall have a remote visible indicator LED/LCD.

2.5.1 Heat Detectors

Heat detectors shall be designed for detection of fire by fixed temperature and combination fixed temperature and rate-of-rise principle. Heat detector spacing shall be rated in accordance with UL 521. Detectors located in areas subject to moisture, or exterior atmospheric conditions, shall be types

approved for such locations. Heat detectors located in attic spaces or similar concealed spaces below the roof shall be intermediate temperature rated.

2.5.1.1 Combination Fixed-Temperature and Rate-of-Rise Detectors

Detectors shall be designed for semi-flush outlet box mounting and supported independently of wiring connections. Contacts shall be self-resetting after response to rate-of-rise principle. Under fixed temperature actuation, the detector shall have a permanent external indication which is readily visible. Detector units located in boiler rooms, showers, or other areas subject to abnormal temperature changes shall operate on fixed temperature principle only. The UL 521 test rating for the fixed temperature portion shall be 57.2 degrees C (135 degrees F). The UL 521 test rating for the Rate-of-Rise detectors shall be rated for 15 by 15 m (50 by 50 ft).

2.5.1.2 Fixed Temperature Detectors

Detectors shall be designed for surface outlet box mounting and supported independently of wiring connections. Detectors shall be designed to detect high heat. The detectors shall have a specific temperature setting of 88 degrees C (190 degrees F). The UL 521 test rating for the fixed temperature detectors shall be rated for 4.57 by 4.57 m (15 by 15 ft).

2.5.2 Smoke Detectors

Smoke detectors shall be designed for detection of abnormal smoke densities. Smoke detectors shall be photoelectric type. Detectors shall contain a visible indicator LED that shows when the unit is in alarm condition. Detectors shall not be adversely affected by vibration or pressure. Detectors shall be the plug-in type in which the detector base contains terminals for making wiring connections. Detectors that are to be installed in concealed (above false ceilings, etc.) locations shall be provided with a remote indicator LED suitable for mounting in a finished, visible location.

2.5.2.1 Photoelectric Detectors

Detectors shall operate on a light scattering concept using an LED light source. Failure of the LED shall not cause an alarm condition. Detectors shall be factory set for sensitivity and shall require no field adjustments of any kind. Detectors shall have an obscuration rating in accordance with UL 268.

2.5.2.2 Duct Detectors

Duct-mounted photoelectric smoke detectors shall be furnished and installed where indicated and in accordance with NFPA 90A. Units shall consist of a smoke detector as specified in paragraph Photoelectric Detectors, mounted in a special housing fitted with duct sampling tubes. Detector circuitry shall be mounted in a metallic enclosure exterior to the duct. Detectors shall have a manual reset. Detectors shall be rated for air velocities that include air flows between 2.5 and 20 mps. Detectors shall be powered from the fire alarm panel. Sampling tubes shall run the full width of the duct. The duct detector package shall conform to the requirements of NFPA 90A, UL 268A, and shall be UL listed for use in air-handling systems. The control functions, operation, reset, and bypass shall be controlled from the fire alarm control panel. Lights to indicate the operation and alarm condition; and the test and reset buttons shall be visible and accessible with the unit installed and the cover in place. Detectors mounted above 1.83 m and those mounted below 1.83 m that cannot be easily accessed while standing on the floor, shall be provided with a remote detector indicator panel containing test and reset switches.

Remote lamps and switches as well as the affected fan units shall be properly identified in etched plastic placards. Detectors shall have auxiliary contacts to provide control, interlock, and shutdown functions specified in Section 15951 HEATING, VENTILATING AND AIR CONDITIONING (HVAC) CONTROL SYSTEMS. The detectors shall be supplied by the fire alarm system manufacturer to ensure complete system compatibility.

2.6 NOTIFICATION APPLIANCES

Audible appliances shall conform to the applicable requirements of UL 464. Devices shall be connected into notification appliance circuits. Devices shall have a separate screw terminal for each conductor. Audible appliances shall generate a unique audible sound from other devices provided in the building and surrounding area. Surface mounted audible appliances shall be painted to match walls. Recessed audible appliances shall be installed with a grill that is painted with a factory finish to match the surface to which it is mounted.

2.6.1 Alarm Horns

Horns shall be surface mounted, with the matching mounting back box recessed vibrating type suitable for use in an electrically supervised circuit. Horns shall produce a sound rating of at least 95 dBA at 3.05 m. Horns used in exterior locations shall be specifically listed or approved for outdoor use and be provided with metal housing and protective grilles.

2.6.2 Visual Notification Appliances

Visual notification appliances shall conform to the applicable requirements of UL 1971. Appliances shall have clear high intensity optic lens, xenon flash tubes, and output white light. Strobe flash rate shall be between 1 to 3 flashes per second and a minimum of 75 candela. Strobe shall be semi-flush mounted.

2.6.3 Combination Audible/Visual Notification Appliances

Combination audible/visual notification appliances shall provide the same requirements as individual units, except that they shall mount as a unit in standard backboxes. Units shall be factory assembled. Any other audible notification appliance employed in the fire alarm systems shall be approved by the Contracting Officer.

2.7 FIRE DETECTION AND ALARM SYSTEM PERIPHERAL EQUIPMENT

2.7.1 Conduit

Conduit and fittings shall comply with UL 6, UL 1242 and UL 797.

2.7.2 Wiring

Wiring shall conform to NFPA 70. Wiring for 120 Vac power shall be No. 12 AWG minimum. Wiring for Fire Alarm circuits shall be No. 14 AWG minimum. Voltages shall not be mixed in any junction box, housing, or device, except those containing power supplies and control relays. Wiring shall conform to NFPA 70. System field wiring shall be solid copper and installed in metallic conduit or electrical metallic tubing, except rigid plastic conduit may be used under slab-on-grade. Conductors

shall be color coded. Conductors used for the same functions shall be similarly color coded. Wiring code color shall remain uniform throughout the circuit. Pigtail or T-tap connections to initiating device circuits, supervisory alarm circuits, and notification appliance circuits are prohibited.

2.7.3 Special Tools and Spare Parts

Software, connecting cables and proprietary equipment, necessary for the maintenance, testing, and reprogramming of the equipment shall be furnished to the Contracting Officer. Two spare fuses of each type and size required shall be furnished. Two percent total of each different device shall be furnished to maintenance personnel upon completion of the acceptance test. Spare fuses shall be mounted in the fire alarm panel.

2.8 TRANSMITTERS

The transmitter and antenna are existing.

3 PART 3 EXECUTION

3.1 INSTALLATION

All work shall be installed as shown and in accordance with the manufacturer's diagrams and recommendations, unless otherwise specified. Smoke detectors shall not be installed until construction is essentially complete and the building has been thoroughly cleaned.

3.1.1 Power Supply for the System

A single dedicated circuit connection for supplying power from a branch circuit to each building fire alarm system shall be provided. The power shall be supplied as shown on the drawings. The power supply shall be equipped with a locking mechanism and marked in red with the words "FIRE ALARM CIRCUIT CONTROL".

3.1.2 Wiring

Conduit size for wiring shall be in accordance with NFPA 70. Wiring for the fire alarm system shall not be installed in conduits, junction boxes, or outlet boxes with conductors of lighting and power systems. Not more than two conductors shall be installed under any device screw terminal. The wires under the screw terminal shall be straight when placed under the terminal then clamped in place under the screw terminal. The wires shall be broken and not twisted around the terminal. Circuit conductors entering or leaving any mounting box, outlet box enclosure, or cabinet shall be connected to screw terminals with each terminal and conductor marked in accordance with the wiring diagram. Connections and splices shall be made using screw terminal blocks. The use of wire nut type connectors in the system is prohibited. Wiring within any control equipment shall be readily accessible without removing any component parts. The fire alarm equipment manufacturer's representative shall be present for the connection of wiring to the control panel.

3.1.3 Control Panel

The control panel and its assorted components shall be mounted so that no part of the enclosing cabinet is less than 300 mm (12 inches) nor more than 2000 mm (78 inches) above the finished floor. Manually

operable controls shall be between 900 and 1100 mm (36 and 42 inches) above the finished floor. Panel shall be installed to comply with the requirements of UL 864.

3.1.4 Detectors

Detectors shall be located and installed in accordance with NFPA 72. Detectors shall be connected into signal line circuits or initiating device circuits as indicated on the drawings. Detectors shall be at least 300 mm (12 inches) from any part of any lighting fixture. Detectors shall be located at least 900 mm (3 feet) from diffusers of air handling systems. Each detector shall be provided with appropriate mounting hardware as required by its mounting location. Detectors which mount in open space shall be mounted directly to the end of the stubbed down rigid conduit drop. Conduit drops shall be firmly secured to minimize detector sway. Where length of conduit drop from ceiling or wall surface exceeds 900 mm (3 feet), sway bracing shall be provided. Detectors installed in concealed locations (above ceiling, raised floors, etc.) shall have a remote visible indicator LED/LCD in a finished, visible location.

3.1.5 Notification Appliances

Notification appliances shall be mounted 2500 mm above the finished floor or 150 mm below the ceiling, whichever is lower.

3.1.6 Supervisory and Alarm Contacts

Contacts in suppression systems and other fire protection subsystems shall be connected to the fire alarm system to perform supervisory and alarm functions as identified in NFPA 72 and as indicated on the drawings. Contacts shall be provided in accordance with other sections of the specifications and specific instructions on corresponding drawings. See Section 13930 WET PIPE SPRINKLER SYSTEM, FIRE PROTECTION.

3.2 OVERVOLTAGE AND SURGE PROTECTION

3.2.1 Power Line Surge Protection

All equipment connected to alternating current circuits shall be protected from surges per IEEE C62.41 B3 combination waveform and NFPA 70. Fuses shall not be used for surge protection. The surge protector shall be rated for a maximum let thru voltage of 350 Volts ac (line-to-neutral) and 350 Volt ac (neutral-to-ground).

3.2.2 Low Voltage DC Circuits Surge Protection

All IDC, NAC, and communication cables/conductors, except fiber optics, shall have surge protection installed at each point where it exits or enters a building. Equipment shall be protected from surges per IEEE C62.41 B3 combination waveform and NFPA 70. The surge protector shall be rated to protect the 24 Volt dc equipment. The maximum dc clamping voltages shall be 36 V (line-to-ground) and 72 Volt dc (line-to-line).

3.3 GROUNDING

Grounding shall be provided by connecting to building ground system.

3.4 TESTING

The Contractor shall notify the Contracting Officer at least 10 days before the preliminary and acceptance tests are to be conducted. The tests shall be performed in accordance with the approved test procedures in the presence of the Contracting Officer. The control panel manufacturer's representative shall be present to supervise tests. The Contractor shall furnish instruments and personnel required for the tests.

3.4.1 Preliminary Tests

Upon completion of the installation, the system shall be subjected to functional and operational performance tests including tests of each installed initiating and notification appliance, when required. Tests shall include the meggering of system conductors to determine that the system is free from grounded, shorted, or open circuits. The megger test shall be conducted prior to the installation of fire alarm equipment. If deficiencies are found, corrections shall be made and the system shall be retested to assure that it is functional. After completing the preliminary testing the Contractor shall complete and submit the NFPA 72, Certificate of Completion.

3.4.2 Acceptance Test

Acceptance testing shall not be performed until the Contractor has completed and submitted the Certificate of Completion. Testing shall be in accordance with NFPA 72. The recommended tests in NFPA 72 shall be considered mandatory and shall verify that previous deficiencies have been corrected. The Contractor shall complete and submit the NFPA 72, Inspection and Testing Form. The test shall include all requirements of NFPA 72 and the following:

a. Test of each function of the control panel.

b. Test of each circuit in both trouble and normal modes.

c. Tests of each alarm initiating devices in both normal and trouble conditions.

d. Tests of each control circuit and device.

e. Tests of each alarm notification appliance.

f. Tests of the battery charger and batteries.

g. Complete operational tests under emergency power supply.

h. Visual inspection of wiring connections.

i. Opening the circuit at each alarm initiating device and notification appliance to test the wiring supervisory feature.

j. Ground fault.

k. Short circuit faults.

l. Stray voltage.

m. Loop resistance.

3.5 TRAINING

Training course shall be provided for the operations and maintenance staff. The course shall be conducted in the building where the system is installed or as designated by the Contracting Officer. Necessary factory training shall be furnished by the Contractor to include air fare, lodging, and school fees. The training period for systems operation shall consist of at least 4 hours and shall start after the system is functionally completed but prior to final acceptance tests. The training shall cover items contained in the operating and maintenance instructions, information provided in paragraph TECHNICAL DATA AND COMPUTER SOFTWARE, and system expansions and modifications.

END OF SECTION

SECTION 13930

WET PIPE SPRINKLER SYSTEM, FIRE PROTECTION

PART 1 GENERAL

1.1 REFERENCES

The publications listed below form a part of this specification to the extent referenced. The publications are referred to in the text by basic designation only.

AMERICAN SOCIETY FOR TESTING AND MATERIALS (ASTM)

ASTM A 47	(1990; R 1995) Ferritic Malleable Iron Castings
ASTM A 53	(1997) Pipe, Steel, Black and Hot-Dipped, Zinc-Coated, Welded and Seamless
ASTM A 135	(1997) Electric-Resistance-Welded Steel Pipe
ASTM A 183	(1983; R 1990) Carbon Steel Track Bolts and Nuts
ASTM A 536	(1984; R 1993) Ductile Iron Castings
ASTM A 795	(1996) Black and Hot-Dipped Zinc-Coated (Galvanized) Welded and Seamless Steel Pipe for Fire Protection Use
ASTM B 88	(1996) Seamless Copper Water Tube
ASTM D 3309	(1996a) Polybutylene (PB) Plastic Hot- and Cold-Water Distribution Systems
ASTM F 442	(1994) Chlorinated Poly(Vinyl Chloride) (CPVC) Plastic Pipe (SDR-PR)

AMERICAN SOCIETY OF MECHANICAL ENGINEERS (ASME)

ASME B16.1	(1989) Cast Iron Pipe Flanges and Flanged Fittings
ASME B16.3	(1992) Malleable Iron Threaded Fittings
ASME B16.4	(1992) Cast Iron Threaded Fittings
ASME B16.9	(1993) Factory-Made Wrought Steel Buttwelding Fittings
ASME B16.11	(1996) Forged Fittings, Socket-Welding and Threaded

ASME B16.18	(1984; R 1994) Cast Copper Alloy Solder Joint Pressure Fittings
ASME B16.21	(1992) Nonmetallic Flat Gaskets for Pipe Flanges
ASME B16.22	(1995) Wrought Copper and Copper Alloy Solder Joint Pressure Fittings
ASME B18.2.1	(1996) Square and Hex Bolts and Screws Inch Series
ASME B18.2.2	(1987; R 1993) Square and Hex Nuts (Inch Series)

AMERICAN SOCIETY OF SANITARY ENGINEERING (ASSE)

ASSE 1015	(1993) Double Check Backflow Prevention Assembly

AMERICAN WATER WORKS ASSOCIATION (AWWA)

AWWA-01	(1995) Standard Methods for the Examination of Water and Wastewater
AWWA B300	(1992) Hypochlorites
AWWA B301	(1992) Liquid Chlorine
AWWA ANSI/AWWA C104/A21.4	(1995) Cement-Mortar Lining for Ductile-Iron Pipe and Fittings for Water
AWWA ANSI/AWWA C110/A21.10	(1993) Ductile-Iron and Gray-Iron Fittings, 3 In. Through 48 In. (75 mm through 1200 mm), for Water and Other Liquids
AWWA ANSI/AWWA C111/A21.11	(1995) Rubber-Gasket Joints for Ductile-Iron Pressure Pipe and Fittings
AWWA ANSI/AWWA C151/A21.51	(1996) Ductile-Iron Pipe, Centrifugally Cast, for Water or Other Liquids
AWWA C203	(1991) Coal-Tar Protective Coatings and Linings for Steel Water Pipelines - Enamel and Tape - Hot-Applied
AWWA M20	(1973) Manual: Water Chlorination Principles and Practices

FACTORY MUTUAL ENGINEERING AND RESEARCH (FM)

FM P7825a	(1998) Approval Guide Fire Protection
FM P7825b	(1998) Approval Guide Electrical Equipment

MANUFACTURERS STANDARDIZATION SOCIETY OF THE VALVE AND FITTINGS INDUSTRY (MSS)

MSS SP-71	(1997) Cast Iron Swing Check Valves, Flanges and Threaded Ends

NATIONAL FIRE PROTECTION ASSOCIATION (NFPA)

NFPA 13	(1996; Errata 13-96-1) Installation of Sprinkler Systems
NFPA 13R	(1996) Installation of Sprinkler Systems in Residential Occupancies Up to and Including Four Stories in Height
NFPA 24	(1995) Installation of Private Fire Service Mains and Their Appurtenances
NFPA 231C	(1995; TIA 95-1) Rack Storage of Materials
NFPA 1963	(1993) Fire Hose Connections

NATIONAL INSTITUTE FOR CERTIFICATION IN ENGINEERING TECHNOLOGIES (NICET)

NICET 1014	(1995) Program Detail Manual for Certification in the Field of Fire Protection Engineering Technology (Field Code 003) Subfield of Automatic Sprinkler System Layout

UNDERWRITERS LABORATORIES (UL)

UL 668	(1995) Hose Valves For Fire Protection Service
UL Bld Mat Dir	(1998) Building Materials Directory
UL Fire Prot Dir	(1998) Fire Protection Equipment Directory

1.2 GENERAL REQUIREMENTS

Wet pipe sprinkler system shall be provided in all areas of the building. The sprinkler system shall provide fire sprinkler protection for the entire area. Except as modified herein, the system shall be designed and installed in accordance with NFPA 13. Pipe sizes which are not indicated on drawings shall be determined by hydraulic calculation.

1.2.1 Hydraulic Design

The system shall be hydraulically designed to discharge the minimum densities indicated over the hydraulically most demanding 280 square meters of floor area. The minimum pipe size for branch lines in gridded systems shall be 32 mm . Hydraulic calculations shall be in accordance with the Area/Density Method of NFPA 13.

1.2.1.1 Hose Demand

An allowance for exterior hose streams as indicated shall be added to the sprinkler system demand .

1.2.1.2 Basis for Calculations

The design of the system shall be based upon a water supply with a static pressure of 331 kPa, and a flow of 6328 L/min at a residual pressure of 214 kPa. Water supply shall be presumed available at the point of connection to existing. Hydraulic calculations shall be based upon the Hazen-Williams formula with a "C" value of 120 for steel piping, 150 for copper tubing, 140 for new cement-lined ductile-iron piping, and 100 for existing underground piping.

1.2.2 Sprinkler Spacing

Sprinklers shall be uniformly spaced on branch lines. Maximum spacing per sprinkler shall not exceed limits specified in NFPA 13 for light and ordinary hazard occupancy.

1.3 SUBMITTALS

Government approval is required for submittals with a "GA" designation; submittals having an "FIO" designation are for information only. Submittals related to system configuration, hydraulic calculations, and equipment selection, including manufacturer's catalog data, working drawings, connection drawings, control diagrams and certificates shall be submitted concurrently as a complete package. The package will be reviewed by the U.S. Army Engineer District Fire Protection Engineer. The following shall be submitted in accordance with Section 01330 SUBMITTAL PROCEDURES:

SD-01 Data

Load Calculations for Sizing Sway Bracing

For systems that are required to be protected against damage from earthquakes, load calculations shall be provided for sizing of sway bracing.

Sprinkler System Equipment; GA.

Manufacturer's Catalog Data for each separate piece of equipment proposed for use in the system. Data shall indicate the name of the manufacturer of each item of equipment, with data highlighted to indicate model, size, options, etc. proposed for installation. In addition, a complete equipment list which includes equipment description, model number and quantity shall be provided.

Hydraulic Calculations; GA.

Hydraulic calculations, including a drawing showing hydraulic reference points and pipe segments.

Spare Parts; FIO.

Spare parts data shall be included for each different item of material and equipment specified. The data shall include a complete list of parts and supplies, with current unit prices and source of supply, and a list of parts recommended by the manufacturer to be replaced after 1 year and 3 years of service. A list

of special tools and test equipment required for maintenance and testing of the products supplied by the Contractor shall be included.

SD-04 Drawings

Sprinkler System Shop Drawings; GA.

Detail drawings conforming to the requirements established for working plans as prescribed in NFPA 13. Drawings shall include plan and elevation views which establish that the equipment will fit the allotted spaces with clearance for installation and maintenance. Each set of drawings shall include the following:

a. Descriptive index of drawings in the submittal with drawings listed in sequence by drawing number. A legend identifying device symbols, nomenclature, and conventions used.

b. Floor plans drawn to a scale not less than 1:100 which clearly show locations of sprinklers, risers, pipe hangers, seismic separation assemblies, sway bracing, inspector's test connections, drains, and other applicable details necessary to clearly describe the proposed arrangement. Each type of fitting used and the locations of bushings, reducing couplings, and welded joints shall be indicated.

c. Actual center-to-center dimensions between sprinklers on branch lines and between branch lines; from end sprinklers to adjacent walls; from walls to branch lines; from sprinkler feed mains, cross-mains and branch lines to finished floor and roof or ceiling. A detail shall show the dimension from the sprinkler and sprinkler deflector to the ceiling in finished areas.

d. Longitudinal and transverse building sections showing typical branch line and cross-main pipe routing as well as elevation of each typical sprinkler above finished floor.

e. Details of each type of riser assembly; pipe hanger; sway bracing for earthquake protection, and restraint of underground water main at point-of-entry into the building, and electrical devices and interconnecting wiring.

As-Built Drawings; FIO.

As-built drawings, no later than 14 working days after completion of the Final Tests. The sprinkler system shop drawings shall be updated to reflect as-built conditions after work is completed and shall be on reproducible full-size mylar film.

SD-06 Instructions

Test Procedures; GA.

Proposed test procedures for piping hydrostatic test, testing of alarms, at least 14 days prior to the start of related testing.

SD-07 Schedules

Preliminary Tests; GA.

A schedule of preliminary tests, at least 14 days prior to the proposed start of the tests.

Final Test; GA.

Upon successful completion of tests specified under paragraph PRELIMINARY TESTS, written notification shall be given to the Contracting Officer of the date for the final acceptance test. Notification shall be provided at least 14 days prior to the proposed start of the test. Notification shall include a copy of the Contractor's Material & Test Certificates.

SD-08 Statements

Installer Qualifications; GA.

Qualifications of the sprinkler installer.

Submittal Preparer's Qualifications; GA.

The name and documentation of certification of the individual who will prepare the submittals, prior to the submittal of the drawings and hydraulic calculations.

SD-13 Certificates

Contractor's Material & Test Certificates; FIO.

Certificates, as specified in NFPA 13, shall be completed and signed by the Contractor's Representative performing required tests for both underground and aboveground piping.

SD-19 Operation and Maintenance Manuals

Sprinkler System; GA.

Manuals shall be in loose-leaf binder format and grouped by technical sections consisting of manufacturer's standard brochures, schematics, printed instructions, general operating procedures, and safety precautions. The manuals shall list routine maintenance procedures possible breakdowns, and repairs, and troubleshooting guide. This shall include procedures and instructions pertaining to frequency of preventive maintenance, inspection, adjustment, lubrication and cleaning necessary to minimize corrective maintenance and repair.

1.4 HYDRAULIC CALCULATIONS

Hydraulic calculations shall be as outlined in NFPA 13 except that calculations shall be performed by computer using software specifically designed for fire protection system design. Software which uses k-factors for typical branch lines is not acceptable. Calculations shall be taken back to the water supply source unless water supply data is otherwise indicated. Calculations shall substantiate that the design area indicated is the hydraulically most demanding. Water supply curves and system requirements shall

be plotted on semi-logarithmic graph paper so as to present a summary of the complete hydraulic calculation. A summary sheet listing sprinklers in the design area and their respective hydraulic reference points, elevations, actual discharge pressures and actual flows shall be provided. Elevations of hydraulic reference points (nodes) shall be indicated. Documentation shall identify each pipe individually and the nodes connected thereto. The diameter, length, flow, velocity, friction loss, number and type fittings, total friction loss in the pipe, equivalent pipe length and Hazen-Williams coefficient shall be indicated for each pipe. For gridded systems, calculations shall show peaking of demand area friction loss to verify that the hydraulically most demanding area is being used. Also for gridded systems, a flow diagram indicating the quantity and direction of flows shall be included. A drawing showing hydraulic reference points (nodes) and pipe designations used in the calculations shall be included and shall be independent of shop drawings.

1.5 SUBMITTAL PREPARER'S QUALIFICATIONS

The sprinkler system submittals, including as-built drawings, shall be prepared by an individual who is either a registered professional engineer or who is certified as a Level III or IV Technician by National Institute for Certification in Engineering Technologies (NICET) in the Automatic Sprinkler System Layout subfield of Fire Protection Engineering Technology in accordance with NICET 1014.

1.6 INSTALLER QUALIFICATIONS

The installer shall be experienced and regularly engaged in the installation of the type and complexity of system included in this project. A statement prior to submittal of any other data or drawings, that the proposed sprinkler system installer is regularly engaged in the installation of the type and complexity of system included in this project shall be provided. In addition, data identifying the location of at least three systems recently installed by the proposed installer which are comparable to the system specified shall be submitted. Contractor shall certify that each system has performed satisfactorily, in the manner intended, for a period of not less than 6 months.

1.7 REGULATORY REQUIREMENTS

Compliance with referenced NFPA standards is mandatory. This includes advisory provisions listed in the appendices of such standards, as though the word "shall" had been substituted for the word "should" wherever it appears. Applicable material and installation standards referenced in Appendix A of NFPA 13 and NFPA 24 shall be considered mandatory the same as if such referenced standards were specifically listed in this specification. In the event of a conflict between specific provisions of this specification and applicable NFPA standards, this specification shall govern. All requirements that exceed the minimum requirements of NFPA 13 shall be incorporated into the design. Reference to "authority having jurisdiction" shall be interpreted to mean the Contracting Officer.

1.8 DELIVERY AND STORAGE

Equipment placed in storage shall be stored with protection from the weather, humidity and temperature variations, dirt and dust or other contaminants.

PART 2 PRODUCTS

2.1 GENERAL EQUIPMENT REQUIREMENTS

2.1.1 Standard Products

Materials and equipment shall be standard products of a manufacturer regularly engaged in the manufacture of such products and shall essentially duplicate items that have been in satisfactory use for at least 2 years prior to bid opening.

2.1.2 Requirements for Fire Protection Service

Equipment and materials shall have been tested by Underwriters Laboratories, Inc. and listed in UL Fire Prot Dir or approved by Factory Mutual and listed in FM P7825a and FM P7825b. Where the terms "listed" or "approved" appear in this specification, such shall mean listed in UL Fire Prot Dir or FM P7825a and FM P7825b

2.1.3 Nameplates

Major components of equipment shall have the manufacturer's name, address, type or style, model or serial number, and catalog number on a plate permanently affixed to the item of equipment.

2.2 UNDERGROUND PIPING SYSTEMS

2.2.1 Pipe

Piping from a point 150 mm above the floor to a point 1500 mm outside the building wall shall be ductile iron with a rated working pressure of 1034 kPa conforming to AWWA ANSI/AWWA C151/A21.51, with cement mortar lining conforming to AWWA ANSI/AWWA C104/A21.4. Piping more than 1500 mm outside the building walls shall comply with Section 02510 WATER DISTRIBUTION SYSTEM.

2.2.2 Fittings and Gaskets

Fittings shall be ductile iron conforming to AWWA ANSI/AWWA C110/A21.10. Gaskets shall be suitable in design and size for the pipe with which such gaskets are to be used. Gaskets for ductile iron pipe joints shall conform to AWWA ANSI/AWWA C111/A21.11.

2.2.3 Gate Valve and Indicator Posts

Gate valves for underground installation shall be of the inside screw type with counter-clockwise rotation to open. Where indicating type valves are shown or required, indicating valves shall be gate valves with an approved indicator post of a length to permit the top of the post to be located 900 mm above finished grade. Gate valves and indicator posts shall be listed in UL Fire Prot Dir or FM P7825a and FM P7825b.

2.3 ABOVEGROUND PIPING SYSTEMS

Aboveground piping shall be steel, copper, or plastic.

2.3.1 Steel Piping System

2.3.1.1 Steel Pipe

Except as modified herein, steel pipe shall be black as permitted by NFPA 13 and shall conform to applicable provisions of ASTM A 795, ASTM A 53, or ASTM A 135. Pipe in which threads or grooves are cut shall be Schedule 40 or shall be listed by Underwriters' Laboratories to have a corrosion resistance ratio (CRR) of 1.0 or greater after threads or grooves are cut. Pipe shall be marked with the name of the manufacturer, kind of pipe, and ASTM designation.

2.3.1.2 Fittings for Non-Grooved Steel Pipe

Fittings shall be cast iron conforming to ASME B16.4, steel conforming to ASME B16.9 or ASME B16.11, or malleable iron conforming to ASME B16.3. Steel press fittings shall be approved for fire protection systems. Fittings into which sprinklers, drop nipples or riser nipples (sprigs) are screwed shall be threaded type. Plain-end fittings with mechanical couplings, fittings which use steel gripping devices to bite into the pipe and segmented welded fittings shall not be used.

2.3.1.3 Grooved Mechanical Joints and Fittings

Joints and fittings shall be designed for not less than 1200 kPa service and shall be the product of the same manufacturer. Fitting and coupling houses shall be malleable iron conforming to ASTM A 47, Grade 32510; ductile iron conforming to ASTM A 536, Grade 65-45-12. Gasket shall be the flush type that fills the entire cavity between the fitting and the pipe. Nuts and bolts shall be heat-treated steel conforming to ASTM A 183 and shall be cadmium plated or zinc electroplated.

2.3.1.4 Flanges

Flanges shall conform to NFPA 13 and ASME B16.1. Gaskets shall be non-asbestos compressed material in accordance with ASME B16.21, 1.6 mm thick, and full face or self-centering flat ring type. Bolts shall be squarehead conforming to ASME B18.2.1 and nuts shall be hexagon type conforming to ASME B18.2.2.

2.3.2 Copper Tube Systems

2.3.2.1 Copper Tube

Copper tube shall conform to ASTM B 88, Types L and M.

2.3.2.2 Copper Fittings

Cast copper alloy pressure fittings shall conform to ASME B16.18 and wrought copper and bronze pressure fittings shall conform to ASME B16.22.

2.3.3 Plastic Pipe Systems

2.3.3.1 Plastic Pipe

Plastic pipe shall be listed in UL Fire Prot Dir for use in wet pipe sprinkler systems and shall conform to requirements as follows:

a. Chlorinated Polyvinyl Chloride (CPVC): ASTM F 442, 1207 kPa rating.

b. Polybutylene (PB): ASTM D 3309, 1207 kPa rating.

2.3.3.2 Plastic Fittings

Plastic fitting shall be chlorinated polyvinyl chloride (CPVC) or polybutylene (PB) as listed in UL Fire Prot Dir for use in wet pipe sprinkler systems.

2.3.4 Pipe Hangers

Hangers shall be listed in UL Fire Prot Dir or FM P7825a and FM P7825b and of the type suitable for the application, construction, and pipe type and sized involved.

2.3.5 Valves

2.3.5.1 Control Valve and Gate Valve

Manually operated sprinkler control valve and gate valve shall be outside stem and yoke (OS&Y) type and shall be listed in UL Bld Mat Dir or FM P7825a and FM P7825b.

2.3.5.2 Check Valve

Check valve 50 mm and larger shall be listed in UL Bld Mat Dir or FM P7825a and FM P7825b. Check valves 100 mm and larger shall be of the swing type with flanged cast iron body and flanged inspection plates, shall have a clear waterway and shall meet the requirements of MSS SP-71, for Type 3 or 4.

2.3.5.3 Hose Valve

Valve shall comply with UL 668 and shall have a minimum rating of 2070 kPa. Valve shall be non-rising stem, all bronze, 90 degree angle type, with 65 mm American National Standard Fire Hose Screw Thread (NH) male outlet in accordance with NFPA 1963. Hose valve shall be provided with 65 to 40 mm reducer. Hose valves shall be equipped with lugged cap with drip drain, cap gasket and chain. Valve finish shall be polished chrome plated.

2.4 ALARM CHECK VALVE ASSEMBLY

Assembly shall include an alarm check valve, standard trim piping, pressure gauges, bypass, retarding chamber, testing valves, main drain, and other components as required for a fully operational system.

2.5 WATER MOTOR ALARM ASSEMBLY

Assembly shall include a body housing, impeller or pelton wheel, drive shaft, striker assembly, gong, wall plate and related components necessary for complete operation. Minimum 20 mm galvanized piping shall be provided between the housing and the alarm check valve. Drain piping from the body housing shall be minimum 25 mm galvanized and shall be arranged to drain to the outside of the building. Piping shall be galvanized both on the inside and outside surfaces.

2.6 ALARM INITIATING AND SUPERVISORY DEVICES

2.6.1 Sprinkler Waterflow Indicator Switch, Vane Type

Switch shall be vane type with a pipe saddle and cast aluminum housing. The electro-mechanical device shall include a flexible, low-density polyethylene paddle conforming to the inside diameter of the fire protection pipe. The device shall sense water movements and be capable of detecting a sustained flow of 38 L/min or greater. The device shall contain a retard device adjustable from 0 to 90 seconds to reduce the possibility of false alarms caused by transient flow surges. The switch shall include two SPDT (Form C) contacts, and shall be equipped with a silicone rubber gasket to assure positive water seal and a dustproof cover and gasket to seal the mechanism from dirt and moisture.

2.6.2 Sprinkler Pressure (Waterflow) Alarm Switch

Pressure switch shall include a metal housing with a neoprene diaphragm, SPDT snap action switches and a 15 mm NPT male pipe thread. The switch shall have a maximum service pressure rating of 1207 kPa . There shall be two SPDT (Form C) contacts factory adjusted to operate at 28 to 55 kPa. The switch shall be capable of being mounted in any position in the alarm line trim piping of the alarm check valve.

2.6.3 Valve Supervisory (Tamper) Switch

Switch shall be suitable for mounting to the type of control valve to be supervised open. The switch shall be tamper resistant and contain one set of SPDT (Form C) contacts arranged to transfer upon removal of the housing cover or closure of the valve of more than two rotations of the valve stem.

2.7 FIRE DEPARTMENT CONNECTION

Fire department connection shall be projecting or flush type with cast brass body, matching wall escutcheon lettered "Auto Spkr" with a polished brass or chromium plated finish. The connection shall have two inlets with individual self-closing clappers, caps with drip drains and chains. Female inlets shall have 65 mm diameter American National Fire Hose Connection Screw Threads (NH) per NFPA 1963.

2.8 SPRINKLERS

Sprinklers shall be used in accordance with their listed spacing limitations. Temperature classification shall be ordinary. Sprinklers in high heat areas including attic spaces or in close proximity to unit heaters shall have temperature classification in accordance with NFPA 13. Sprinklers with internal O-rings shall not be used.

2.8.1 Upright Sprinkler

Upright sprinkler shall be brass or chrome-plated and shall have a nominal 12.7 mm or 13.5 mm orifice.

2.8.2 Pendent Sprinkler

Pendent sprinkler shall be of the fusible strut or glass bulb type, semi-recessed type with nominal 12.7 mm or 13.5 mm orifice. Pendent sprinklers shall have a polished chromefinish.

2.8.3 Sidewall Sprinkler

Sidewall sprinkler shall have a nominal 12.7 mm orifice. Sidewall sprinkler shall have a brass or polished chrome finish. Sidewall sprinkler shall be the quick-response type.

2.9 DISINFECTING MATERIALS

2.9.1 Liquid Chlorine

Liquid chlorine shall conform to AWWA B301.

2.9.2 Hypochlorites

Calcium hypochlorite and sodium hypochlorite shall conform to AWWA B300.

2.10 ACCESSORIES

2.10.1 Sprinkler Cabinet

Spare sprinklers shall be provided in accordance with NFPA 13 and shall be packed in a suitable metal or plastic cabinet. Spare sprinklers shall be representative of, and in proportion to, the number of each type and temperature rating of the sprinklers installed. At least one wrench of each type required shall be provided.

2.10.2 Pendent Sprinkler Escutcheon

Escutcheon shall be one-piece metallic type with a depth of less than 20 mm and suitable for installation on pendent sprinklers. The escutcheon shall have a factory finish that matches the pendent sprinkler heads.

2.10.3 Pipe Escutcheon

Escutcheon shall be polished chromium-plated zinc alloy, or polished chromium-plated copper alloy. Escutcheons shall be either one-piece or split-pattern, held in place by internal spring tension or set screw.

2.10.4 Sprinkler Guard

Guard shall be a steel wire cage designed to encase the sprinkler and protect it from mechanical damage. Guards shall be provided on sprinklers located as indicated.

2.10.5 Identification Sign

Valve identification sign shall be minimum 150 mm wide x 50 mm high with enamel baked finish on minimum 1.214 mm (18 gauge) steel or 0.6 mm aluminum with red letters on a white background or white letters on red background. Wording of sign shall include, but not be limited to "main drain," "auxiliary drain," "inspector's test," "alarm test," "alarm line," and similar wording as required to identify operational components.

2.11 FIRE HOSE REEL ASSEMBLY

Assembly shall include nozzle, fire hose, reel, 40 mm valve, and bracket suitable for wall mounting. The assembly shall be semi-automatic type complete with Underwriters clip which permits controlled one-man operation whereby control valve can be opened, hose unreeled and clip released by pulling on hose. Valve shall be non-rising stem, all bronze, angle type with 40 mm American National Standard Fire Hose Screw Thread (NH) male outlet in accordance with NFPA 1963. Reel shall be of steel construction with red enamel finish and shall be equipped with 30 meters of 40 mm rubber lined fire hose. Nozzle shall be of the industrial combination fog-straight stream type with shutoff. Components of the assembly shall be listed in UL Fire Prot Dir.

2.12 DOUBLE-CHECK VALVE BACKFLOW PREVENTION ASSEMBLY

Double-check backflow prevention assembly shall comply with ASSE 1015. The assembly shall have a bronze, cast-iron or stainless steel body with flanged ends. The assembly shall include OS&Y shutoff valves on the inlet and outlet, 2-positive-seating check valve for continuous pressure application, and four test cocks. Assemblies shall be rated for working pressure of 1034 kPa . The maximum pressure loss shall be 40 kPa at a flow rate equal to the sprinkler water demand, at the location of the assembly.

PART 3 EXECUTION

3.1 INSTALLATION REQUIREMENTS

The installation shall be in accordance with the applicable provisions of NFPA 13, NFPA 24 and publications referenced therein. Installation of in-rack sprinklers shall comply with applicable provisions of NFPA 231C.

3.2 ABOVEGROUND PIPING INSTALLATION

Piping shall be run straight and bear evenly on hangers and supports.

3.2.1 Protection of Piping Against Earthquake Damage

The system piping shall be protected against damage from earthquakes. Seismic protection of the piping system shall be provided in accordance with NFPA 13 and Appendix A, with the exception that the "Earthquake Zones" map of Appendix A shall not apply to this project. Seismic protection shall include flexible couplings, sway bracing, seismic separation assemblies where piping crosses building seismic separation joints, and other features as required in NFPA 13 for protection of piping against damage from earthquakes. Branch lines shall be equipped with sway braces at the end sprinkler head and at intervals not exceeding 9 m.

3.2.2 Piping in Exposed Areas

Exposed piping shall be installed so as not to diminish exit access widths, corridors or equipment access. Exposed horizontal piping, including drain piping, shall be installed to provide maximum headroom.

3.2.3 Piping in Finished Areas

In areas with suspended or dropped ceilings and in areas with concealed spaces above the ceiling, piping shall be concealed above ceilings. Piping shall be inspected, tested and approved before being concealed. Risers and similar vertical runs of piping in finished areas shall be concealed.

3.2.4 Pendent Sprinklers

Drop nipples to pendent sprinklers shall consist of minimum 25 mm pipe with a reducing coupling into which the sprinkler shall be threaded. Hangers shall be provided on arm-overs to drop nipples supplying pendent sprinklers when the arm-over exceeds 300 mm. Where sprinklers are installed below suspended or dropped ceilings, drop nipples shall be cut such that sprinkler ceiling plates or escutcheons are of a uniform depth throughout the finished space. The outlet of the reducing coupling shall not extend more than 25 mm below the underside of the ceiling. On pendent sprinklers installed below suspended or dropped ceilings, the distance from the sprinkler deflector to the underside of the ceiling shall not exceed 100 mm. Recessed pendent sprinklers shall be installed such that the distance from the sprinkler deflector to the underside of the ceiling shall not exceed the manufacturer's listed range and shall be of uniform depth throughout the finished area.

3.2.4.1 Pendent Sprinkler Locations

Pendent sprinklers in suspended ceilings shall be a minimum of 150 mm from ceiling grid.

3.2.5 Upright Sprinklers

Riser nipples or "sprigs" to upright sprinklers shall contain no fittings between the branch line tee and the reducing coupling at the sprinkler. Riser nipples exceeding 750 mm in length shall be individually supported.

3.2.6 Pipe Joints

Pipe joints shall conform to NFPA 13, except as modified herein. Not more than four threads shall show after joint is made up. Welded joints will be permitted, only if welding operations are performed as required by NFPA 13 at the Contractor's fabrication shop, not at the project construction site. Flanged joints shall be provided where indicated or required by NFPA 13. Grooved pipe and fittings shall be prepared in accordance with the manufacturer's latest published specification according to pipe material, wall thickness and size. Grooved couplings and fittings shall be from the same manufacturer.

3.2.7 Reducers

Reductions in pipe sizes shall be made with one-piece tapered reducing fittings. The use of grooved-end or rubber-gasketed reducing couplings will not be permitted. When standard fittings of the required size are not manufactured, single bushings of the face type will be permitted. Where used, face bushings

shall be installed with the outer face flush with the face of the fitting opening being reduced. Bushings shall not be used in elbow fittings, in more than one outlet of a tee, in more than two outlets of a cross, or where the reduction in size is less than 15 mm.

3.2.8 Pipe Penetrations

Cutting structural members for passage of pipes or for pipe-hanger fastenings will not be permitted. Pipes that must penetrate concrete or masonry walls or concrete floors shall be core-drilled and provided with pipe sleeves. Each sleeve shall be Schedule 40 galvanized steel, ductile iron or cast iron pipe and shall extend through its respective wall or floor and be cut flush with each wall surface. Sleeves shall provide required clearance between the pipe and the sleeve per NFPA 13. The space between the sleeve and the pipe shall be firmly packed with mineral wool insulation. Where pipes pass through fire walls, fire partitions, or floors, a fire seal shall be placed between the pipe and sleeve in accordance with Section 07840 FIRESTOPPING. In penetrations which are not fire-rated or not a floor penetration, the space between the sleeve and the pipe shall be sealed at both ends with plastic waterproof cement which will dry to a firm but pliable mass or with a mechanically adjustable segmented elastomer seal.

3.2.9 Escutcheons

Escutcheons shall be provided for pipe penetration of ceilings and walls. Escutcheons shall be securely fastened to the pipe at surfaces through which piping passes.

3.2.10 Inspector's Test Connection

Unless otherwise indicated, test connection shall consist of 25 mm pipe connected to the remote branch line; a test valve located approximately 2 meters above the floor; a smooth bore brass outlet equivalent to the smallest orifice sprinkler used in the system; and a painted metal identification sign affixed to the valve with the words "Inspector's Test." The discharge orifice shall be located outside the building wall directed so as not to cause damage to adjacent construction or landscaping during full flow discharge.

3.2.11 Drains

Main drain piping shall be provided to discharge at a safe point outside the building. Auxiliary drains shall be provided as required by NFPA 13 except that drain valves shall be used where drain plugs are otherwise permitted. Where branch lines terminate at low points and form trapped sections, such branch lines shall be manifolded to a common drain line.

3.2.12 Installation of Fire Department Connection

Connection shall be mounted on the exterior wall approximately 900 mm above finished grade. The piping between the connection and the check valve shall be provided with an automatic drip in accordance with NFPA 13 and arranged to drain to the outside.

3.2.13 Identification Signs

Signs shall be affixed to each control valve, inspector test valve, main drain, auxiliary drain, test valve, and similar valves as appropriate or as required by NFPA 13. Hydraulic design data nameplates shall be permanently affixed to each sprinkler riser as specified in NFPA 13.

3.3 UNDERGROUND PIPING INSTALLATION

The fire protection water main shall be laid, and joints anchored, in accordance with NFPA 24. Minimum depth of cover shall be 900mm. The supply line shall terminate inside the building with a flanged piece, the bottom of which shall be set not less than 150 mm above the finished floor. A blind flange shall be installed temporarily on top of the flanged piece to prevent the entrance of foreign matter into the supply line. A concrete thrust block shall be provided at the elbow where the pipe turns up toward the floor. In addition, joints shall be anchored in accordance with NFPA 24 using pipe clamps and steel rods from the elbow to the flange above the floor and from the elbow to a pipe clamp in the horizontal run of pipe. Buried steel components shall be provided with a corrosion protective coating in accordance with AWWA C203. Piping more than 1500 mm outside the building walls shall meet the requirements of Section 02510 WATER DISTRIBUTION SYSTEM.

3.4 EARTHWORK

Earthwork shall be performed in accordance with applicable provisions of Section 02315 EXCAVATION, FILLING AND BACKFILLING FOR BUILDINGS.

3.5 ELECTRICAL WORK

Alarm signal wiring connected to the building fire alarm control system shall be in accordance with Section 13850 and 13851 FIRE DETECTION AND ALARM SYSTEM. All wiring for supervisory and alarm circuits shall be #14 AWG solid copper installed in metallic tubing or conduit. Wiring color code shall remain uniform throughout the system.

3.6 DISINFECTION

After all system components are installed and hydrostatic test are successfully completed, each portion of the sprinkler system to be disinfected shall be thoroughly flushed with potable water until all entrained dirt and other foreign materials have been removed before introducing chlorinating material. Flushing shall be conducted by removing the flushing fitting of the cross mains and of the grid branch lines, and then back-flushing through the sprinkler main drains. The chlorinating material shall be hypochlorites or liquid chlorine. Water chlorination procedure shall be in accordance with AWWA M20. The chlorinating material shall be fed into the sprinkler piping at a constant rate of 50 parts per million (ppm). A properly adjusted hypochlorite solution injected into the system with a hypochlorinator, or liquid chlorine injected into the system through a solution-fed chlorinator and booster pump shall be used. Chlorination application shall continue until the entire system if filled. The water shall remain in the system for a minimum of 24 hours. Each valve in the system shall be opened and closed several times to ensure its proper disinfection. Following the 24-hour period, no less than 25 ppm chlorine residual shall remain in the system. The system shall then be flushed with clean water until the residual chlorine is reduced to less than one part per million. Samples of water in properly disinfected containers for bacterial examination will be taken from several system locations which are approved by the Contracting Officer. Samples shall be tested for total coliform organisms (coliform bacteria, fecal coliform, streptococcal, and other bacteria) in accordance with AWWA-01. The testing method shall be either the multiple-tube fermentation technique or the membrane-filter technique. The disinfection shall be repeated until tests indicate the absence of coliform organisms (zero mean coliform density per 100 milliliters) in the samples for at least 2 full days. The system will not be accepted until satisfactory bacteriological results have been obtained.

3.7 FIELD PAINTING AND FINISHING

Field painting and finishing are specified in Section 09900 PAINTING, GENERAL.

3.8 PRELIMINARY TESTS

The system, including the underground water mains, and the aboveground piping and system components, shall be tested to assure that equipment and components function as intended. The underground and aboveground interior piping systems and attached appurtenances subjected to system working pressure shall be tested in accordance with NFPA 13 and NFPA 24. Upon completion of specified tests, the Contractor shall complete certificates as specified in paragraph SUBMITTALS.

3.8.1 Underground Piping

3.8.1.1 Flushing

Underground piping shall be flushed in accordance with NFPA 24. This includes the requirement to flush the lead-in connection to the fire protection system at a flow rate not less that the calculated maximum water demand rate of the system.

3.8.1.2 Hydrostatic Testing

New underground piping shall be hydrostatically tested in accordance with NFPA 24. The allowable leakage shall be measured at the specified test pressure by pumping from a calibrated container. The amount of leakage at the joints shall not exceed 1.89 liters per hour per 100 gaskets or joints, regardless of pipe diameter.

3.8.2 Aboveground Piping

3.8.2.1 Hydrostatic Testing

Aboveground piping shall be hydrostatically tested in accordance with NFPA 13 at not less than 1400 kPa or 350 kPa in excess of maximum system operating pressure and shall maintain that pressure without loss for 2 hours. There shall be no drop in gauge pressure or visible leakage when the system is subjected to the hydrostatic test. The test pressure shall be read from a gauge located at the low elevation point of the system or portion being tested.

3.8.3 Testing of Alarm Devices

Each alarm switch shall be tested by flowing water through the inspector's test connection. Each water-operated alarm devices shall be tested to verify proper operation.

3.8.4 Main Drain Flow Test

Following flushing of the underground piping, a main drain test shall be made to verify the adequacy of the water supply. Static and residual pressures shall be recorded on the certificate specified in paragraph SUBMITTALS. In addition, a main drain test shall be conducted each time after a main control valve is shut and opened.

3.9 FINAL ACCEPTANCE TEST

A technician employed by the installing Contractor shall be present for the final tests and shall provide a complete demonstration of the operation of the system. This shall include operation of control valves and flowing of inspector's test connections to verify operation of associated waterflow alarm switches. After operation of control valves has been completed, the main drain test shall be repeated to assure that control valves are in the open position. In addition, the representative shall have available copies of as-built drawings and certificates of tests previously conducted. The installation shall not be considered accepted until identified discrepancies have been corrected and test documentation is properly completed and received.

END OF SECTION

SECTION 15070

SEISMIC PROTECTION FOR MECHANICAL EQUIPMENT

PART 1 GENERAL

1.1 REFERENCES

The publications listed below form a part of this specification to the extent referenced. The publications are referred to in the text by basic designation only.

COE TECHNICAL INSTRUCTIONS (TI)

TI 809-04	(1998) Seismic Design for Buildings

SHEET METAL & AIR CONDITIONING CONTRACTORS' NATIONAL ASSOCIATION (SMACNA)

SMACNA Seismic Restraint Mnl	(1991; Appx E, 1993) Seismic Restraint Manual Guidelines for Mechanical Systems

1.2 SYSTEM DESCRIPTION

1.2.1 General Requirements

The requirements for seismic protection measures described in this section shall be applied to the mechanical equipment and systems listed below. Structural requirements shall be in accordance with Section 13080 SEISMIC PROTECTION FOR MISCELLANEOUS EQUIPMENT.

1.2.2 Mechanical Equipment

Mechanical equipment to be seismically protected shall include the following items to the extent required on the drawings or in other sections of these specifications:

Boilers and furnaces
Water Heaters
Expansion Tanks
Heat Exchangers
Pumps with Motors
Unit Heaters
Heating Ventilation Units
Storage Tanks for Oil and Water
Water, Oil and Gas Piping
Valves and Fittings for Piping
Air Handling Units
Hear Recovery Units Ducts
Exhaust and Return Fans

1.2.3 Mechanical Systems

The following mechanical systems shall be installed as required on the drawings and other sections of these specifications and shall be seismically protected in accordance with this specification:

All Piping Inside the Building Except as Specifically Stated Below Under "Items Not Covered By This Section".
Water Distribution and Piping Systems Outside of Buildings
Fuel Piping Outside of Buildings
All Water Supply Systems

Storm and Sanitary Sewer Systems
All Process Piping
Heat Distribution Systems (Supply, Return, and Condensate Return) Outside of Buildings
Tube Distribution System
Fuel Storage Tanks
Water Storage Tanks

1.2.4 Contractor Designed Bracing

The Contractor shall design the bracing in accordance with TI 809-04 and additional data furnished by the Contracting Officer. Resistance to lateral forces induced by earthquakes shall be accomplished without consideration of friction resulting from gravity loads. TI 809-04 uses parameters for the building, not for the equipment in the building; therefore, corresponding adjustments to the formulas shall be required. Loadings determined using TI 809-04 are based on strength design; therefore, the AISC LRFD Specifications shall be used for the design. The bracing for the following mechanical equipment and systems shall be developed by the Contractor.

1.2.5 Items Not Covered By This Section

1.2.5.1 Fire Protection Systems

Seismic protection of piping for fire protection systems shall be installed as specified in Section 13930 WET PIPE SPRINKLER SYSTEM However, the design seismic loadings for these items shall not be less than loadings obtained using the procedures in TI 809-04.

1.2.5.2 Items Requiring No Seismic Restraints

Seismic restraints are not required for the following items:

a. Gas piping less than 25 mm inside diameter.

b. Piping in boiler and mechanical equipment rooms less than 32 mm inside diameter.

c. All other piping less than 63.5 mm diameter.

d. Rectangular air handling ducts less than 0.557 square meters in cross sectional area.

e. Round air handling ducts less than 711 mm in diameter.

f. Piping suspended by individual hangers 305 mm or less in length from the top of pipe to the bottom of the supporting structural member where the hanger is attached, except as noted below.

g. Ducts suspended by hangers 308 mm or less in length from the top of the duct to the bottom of the supporting structural member, except as noted below.

In exemptions f. and g. all hangers shall meet the length requirements. If the length requirement is exceeded by one hanger in the run, the entire run shall be braced. Interior piping and ducts not listed above shall be seismically protected in accordance with the provisions of this specification.

1.3 EQUIPMENT REQUIREMENTS

1.3.1 Rigidly Mounted Equipment

Specific items of equipment to be furnished under this contract shall be constructed and assembled to withstand the seismic forces specified in TI 809-04, Chapter 10. For any rigid equipment which is rigidly attached on both sides of a building expansion joint, flexible joints for piping, electrical conduit, etc. that are capable of accommodating displacements equal to the full width of the joint in both orthogonal directions, shall be provided.

Boilers
Air-Handling Units

1.3.2 Nonrigid or Flexibly-Mounted Equipment

Specific items of equipment to be furnished under this contract shall be constructed and assembled to resist a horizontal lateral force of 0.15 times the operating weight of the equipment at the vertical center of gravity of the equipment.

1.4 SUBMITTALS

Government approval is required for submittals with a "GA" designation; submittals having an "FIO" designation are for information only. The following shall be submitted in accordance with Section 01330 SUBMITTAL PROCEDURES:

SD-01 Data

Coupling and Bracing; GA. Equipment Requirements; GA.

Copies of the design calculations with the detail drawings. Calculations shall be stamped by a registered engineer and shall verify the capability of structural members to which bracing is attached for carrying the load from the brace.

Contractor Designed Bracing; GA.

Copies of the design calculations with the drawings. Calculations shall be approved, certified, stamped and signed by a registered Professional Engineer. Calculations shall verify the capability of structural members to which bracing is attached for carrying the load from the brace.

SD-04 Drawings

Coupling and Bracing; FIO. Flexible Couplings or Joints; FIO. Equipment Requirements; FIO. Contractor Designed Bracing; FIO.

Detail drawings along with catalog cuts, templates, and erection and installation details, as appropriate, for the items listed. Submittals shall be complete in detail; shall indicate thickness, type, grade, class of metal, and dimensions; and shall show construction details, reinforcement, anchorage, and installation with relation to the building construction.

SD-13 Certificates

Flexible Ball Joints; FIO.

Flexible ball joints shall be certified to be suitable for the service intended by the manufacturer. Information verifying experience at not less than 3 locations of 2 years' satisfactory operation in a similar application shall be submitted.

PART 2 PRODUCTS

2.1 FLEXIBLE COUPLINGS

Flexible couplings shall have same pressure and temperature ratings as adjoining pipe.

2.2 FLEXIBLE BALL JOINTS

Flexible ball joints shall have cast or wrought steel casing and ball parts capable of 360-degree rotation with not less than 15-degree angular movement.

2.3 FLEXIBLE MECHANICAL JOINTS

a. Mechanical couplings for steel or cast iron pipe shall be of the sleeve type and shall provide a tight flexible joint under all reasonable conditions, such as pipe movement caused by expansion, contraction, slight settling or shifting of the ground, minor variations in trench gradients, and traffic vibrations. Where permitted in other sections of these specifications, joints utilizing split-half couplings with grooved or shouldered pipe ends may be used.

b. Sleeve-type couplings shall be used for joining plain-end pipe sections. The coupling shall consist of one steel middle ring, two steel followers, two gaskets, and necessary steel bolts and nuts to compress the gaskets.

2.4 MANUFACTURED BALL JOINTS

Manufactured ball joints shall be as recommended by the manufacturer for the intended use, and shall be approved by the Contracting Officer before installation.

2.5 SWAY BRACING MATERIALS

Sway bracing materials (e.g. rods, plates, rope, angles, etc.) shall be as specified in Section 13080 SEISMIC PROTECTION FOR MISCELLANEOUS EQUIPMENT.

PART 3 EXECUTION

3.1 COUPLING AND BRACING

Coupling installation shall conform to the details shown on the drawings. Provisions of this paragraph apply to all piping within a 1.5 m line around outside of building unless buried in the ground. Piping grouped for support on trapeze-type hangers shall be braced at the same intervals as determined by the smallest diameter pipe of the group. Bracing rigidly attached to pipe flanges, or similar, shall not be used where it would interfere with thermal expansion of piping.

3.2 BUILDING DRIFT

Joints capable of accommodating seismic displacements shall be provided for vertical piping between floors of the building, where pipes pass through a building seismic or expansion joint, or where rigidly supported pipes connect to equipment with vibration isolators. Horizontal piping across expansion joints shall accommodate the resultant of the drifts of each building unit in each orthogonal direction. For threaded piping, swing joints made of the same piping material shall be provided. For piping with manufactured ball joints the seismic drift shall be 0.015 meters per meter of height above the base where the seismic separation occurs; this drift value shall be used in place of the expansion given in the manufacturer's selection table.

3.3 FLEXIBLE COUPLINGS OR JOINTS

3.3.1 Building Piping

Flexible couplings or joints in building piping shall be provided at bottom of all pipe risers for pipe larger than 89 mm in diameter. Flexible couplings or joints shall be braced laterally without interfering with the action of the flexible coupling or joint. Cast iron waste and vent piping need only comply with these provisions when caulked joints are used. Flexible bell and spigot pipe joints using rubber gaskets or no-hub fittings may be used at each branch adjacent to tees and elbows for underground waste piping inside of building to satisfy these requirements.

3.3.2 Underground Piping

Underground piping and 102 mm or larger conduit, except heat distribution system, shall have flexible couplings installed where the piping enters the building. The couplings shall accommodate 76 mm of relative movement between the pipe and the building in any direction. Additional flexible couplings shall be provided where shown on the drawings.

3.4 PIPE SLEEVES

Pipe sleeves in interior non-fire rated walls shall be sized as indicated on the drawings to provide clearances that will permit differential movement of piping without the piping striking the pipe sleeve. Pipe sleeves in fire rated walls shall conform to the requirements in Section 07840 FIRESTOPPING.

3.5 SPREADERS

Spreaders shall be provided between adjacent piping runs to prevent contact during seismic activity whenever pipe or insulated pipe surfaces are less than 102 mm apart. Spreaders shall be applied at same interval as sway braces at an equal distance between the sway braces. If rack type hangers are used where the pipes are restrained from contact by mounting to the rack, spreaders are not required for pipes mounted in the rack. Spreaders shall be applied to surface of bare pipe and over insulation on insulated pipes utilizing high-density inserts and pipe protection shields in accordance with the requirements of Section 15080 THERMAL INSULATION FOR MECHANICAL SYSTEMS.

3.6 SWAY BRACES FOR PIPING

Sway braces shall be provided to prevent movement of the pipes under seismic loading. Braces shall be provided in both the longitudinal and transverse directions, relative to the axis of the pipe. The bracing shall not interfere with thermal expansion requirements for the pipes as described in other sections of these specifications.

3.6.1 Transverse Sway Bracing

Transverse sway bracing for steel and copper pipe shall be provided as specified in Section 13080 SEISMIC PROTECTION FOR MISCELLANEOUS EQUIPMENT. All runs (length of pipe between end joints) shall have a minimum of two transverse braces. Transverse sway bracing for pipes of materials other than steel and copper shall be provided at intervals not to exceed the hanger spacing as specified in Section 15400 PLUMBING, GENERAL PURPOSE.

3.6.2 Longitudinal Sway Bracing

Longitudinal sway bracing shall be provided at 12.2 m intervals unless otherwise indicated. All runs (length of pipe between end joints) shall have one longitudinal brace minimum. Sway braces shall be

constructed in accordance with the drawings. Branch lines, walls, or floors shall not be used as sway braces.

3.6.3 Vertical Runs

Run is defined as length of pipe between end joints. Vertical runs of piping shall be braced at not more than 3.05 m vertical intervals. Braces for vertical runs shall be above the center of gravity of the segment being braced. All sway braces shall be constructed in accordance with the drawings. Sway branches shall not be connected to branch lines, walls, or floors.

3.6.4 Clamps and Hangers

Clamps or hangers on uninsulated pipes shall be applied directly to pipe. Insulated piping shall have clamps or hangers applied over insulation in accordance with Section 15080 THERMAL INSULATION FOR MECHANICAL SYSTEMS.

3.7 SWAY BRACES FOR DUCTS

3.7.1 Braced Ducts

Bracing details and spacing for rectangular and round ducts shall be in accordance with SMACNA Seismic Restraint Mnl, including Appendix E and TI 809-04 procedures. However, the design seismic loadings for these items shall not be less than loadings obtained using the procedures in TI 809-04.

3.7.2 Unbraced Ducts

Hangers for unbraced ducts shall be attached to the duct within 52 mm of the top of the duct with a minimum of two #10 sheet metal screws. Unbraced ducts shall be installed with a 152 mm minimum clearance to vertical ceiling hanger wires.

END OF SECTION

SECTION 15080

THERMAL INSULATION FOR MECHANICAL SYSTEMS

PART 1 GENERAL

1.1 REFERENCES

The publications listed below form a part of this specification to the extent referenced. The publications are referred to in the text by basic designation only. At the discretion of the government, the manufacturer of any material supplied will be required to furnish test reports pertaining to any of the tests necessary to assure compliance with the standard or standards referenced in this specification.

AMERICAN SOCIETY FOR TESTING AND MATERIALS (ASTM)

ASTM A 167	(1996) Stainless and Heat-Resisting Chromium-Nickel Steel Plate, Sheet, and Strip
ASTM A 580/A 580M	(1995a) Stainless and Steel Wire
ASTM B 209	(1996) Aluminum and Aluminum-Alloy Sheet and Plate
ASTM C 195	(1995) Mineral Fiber Thermal Insulating Cement
ASTM C 449/C 449M	(1995) Mineral Fiber Hydraulic-Setting Thermal Insulating and Finishing Cement
ASTM C 533	(1995) Calcium Silicate Block and Pipe Thermal Insulation
ASTM C 534	(1994) Preformed Flexible Elastomeric Cellular Thermal Insulation in Sheet and Tubular Form
ASTM C 547	(1995) Mineral Fiber Pipe Insulation
ASTM C 552	(1991) Cellular Glass Thermal Insulation
ASTM C 553	(1992) Mineral Fiber Blanket Thermal Insulation for Commercial and Industrial Applications
ASTM C 612	(1993) Mineral Fiber Block and Board Thermal Insulation
ASTM C 647	(1995) Properties and Tests of Mastics and Coating Finishes for Thermal Insulation
ASTM C 795	(1992) Thermal Insulation for Use in Contact With Austenitic Stainless Steel

ASTM C 871	(1995) Chemical Analysis of Thermal Insulation Materials for Leachable Chloride, Fluoride, Silicate, and Sodium Ions
ASTM C 916	(1985; Rev 1996) Adhesives for Duct Thermal Insulation
ASTM C 920	(1995) Elastomeric Joint Sealants
ASTM C 921	(1989 R; 1996) Determining the Properties of Jacketing Materials for Thermal Insulation
ASTM C 1126	(1996) Specification for Faced or Unfaced Rigid Cellular Phenolic Thermal Insulation
ASTM D 3278	(1996) Test Methods for Flash Point of Liquids by Small Scale & Closed-Cup Apparatus
ASTM E 84	(1996a) Surface Burning Characteristics of Building Materials
ASTM E 96	(1995) Water Vapor Transmission of Materials

MANUFACTURERS STANDARDIZATION SOCIETY OF THE VALVE AND FITTINGS INDUSTRY (MSS)

MSS SP-69	(1996) Pipe Hangers and Supports - Selection and Application

MIDWEST INSULATION CONTRACTORS ASSOCIATION (MICA)

MICA-01	(1993) National Commercial & Industrial Insulation Standards

1.2 SYSTEM DESCRIPTION

Field-applied insulation and accessories on mechanical systems shall be as specified herein; factory-applied insulation is specified under the piping, duct or equipment to be insulated. Field applied insulation materials required for use on Government-furnished items as listed in the SPECIAL CONTRACT REQUIREMENTS shall be furnished and installed by the Contractor.

1.3 GENERAL QUALITY CONTROL

1.3.1 Standard Products

Materials shall be the standard products of manufacturers regularly engaged in the manufacture of such products and shall essentially duplicate items that have been in satisfactory use for at least 2 years prior to bid opening.

1.3.2 Installer's Qualifications

Qualified installers shall have successfully completed three or more similar type jobs within the last 5 years.

1.3.3 Surface Burning Characteristics

Unless otherwise specified, insulation not covered with a jacket shall have a flame spread rating no higher than 75 and a smoke developed rating no higher than 150. The outside surface of insulation systems which are located in air plenums, in ceiling spaces, and in attic spaces shall have a flame spread rating no higher than 25 and a smoke developed rating no higher than 50. Insulation materials located exterior to the building perimeter are not required to be fire-rated. Flame spread and smoke developed ratings shall be determined by ASTM E 84. Insulation shall be tested in the same density and installed thickness as the material to be used in the actual construction. Jackets shall comply with the flame spread and smoke developed ratings of 25/50 as determined by ASTM E 84.

1.3.4 Identification of Materials

Packages or standard containers of insulation, jacket material, cements, adhesives, and coatings delivered for use, and samples required for approval shall have manufacturer's stamp or label attached giving the name of the manufacturer and brand, and a description of the material.

1.4 SUBMITTALS

Government approval is required for submittals with a "GA" designation; submittals having an "FIO" designation are for information only. The following shall be submitted in accordance with Section 01330 SUBMITTAL PROCEDURES:

SD-14 Samples

Thermal Insulation Materials; FIO.

A complete list of materials, including manufacturer's descriptive technical literature, performance data, catalog cuts, and installation instructions. The product number, k-value, thickness and furnished accessories for each mechanical system requiring insulation shall be included. Materials furnished under this section of the specification shall be submitted at one time.

After approval of materials and prior to applying insulation a booklet shall be prepared and submitted for approval. The booklet shall contain marked-up MICA-01 plates (or detail drawings showing the insulation material and insulating system) for each pipe, duct, or piece of equipment required to be insulated per this specification. The MICA plates shall be marked up showing the materials to be installed in accordance with the requirements of this specification for the specific insulation application. The Contractor shall submit all MICA Plates required to show the entire insulating system, including Plates required to show insulation penetrations, vessel bottom and top heads, legs, and skirt insulation as applicable. If the Contractor elects to submit detailed drawings instead of marked-up MICA Plates, the detail drawings shall show cut-away, section views, and details indicating each component of the insulation system and showing provisions for insulating jacketing, and sealing portions of the equipment. For each type of insulation installation on the drawings, provide a label which identifies each component in the installation (i.e., the duct**,** insulation, adhesive, vapor retarder, jacketing, tape, mechanical fasteners, etc.) Indicate insulation by type and manufacturer. Three copies of the booklet shall be submitted at the jobsite to the Contracting Officer. One copy of the approved booklet shall remain with the insulation Contractor's display sample and two copies shall be provided for Government use.

After approval of materials actual sections of installed systems properly insulated in accordance with the specification requirements shall be displayed. Such actual sections must remain accessible to inspection throughout the job and will be reviewed from time to time for controlling the quality of the work throughout the construction site. Each material used shall be identified, by indicating on an attached sheet the specification requirement for the material and the material by each manufacturer intended to meet the requirement. Display sample sections will be inspected at the jobsite by the Contracting Officer. Approved display sample sections shall remain on display at the jobsite during the construction period. Upon completion of construction, the display sample sections will be closed and sealed.

Pipe Insulation Display Sections: Display sample sections shall include as a minimum an elbow or tee, a valve, dielectric unions and flanges, a hanger with protection shield and insulation insert, or dowel as required, at support point, method of fastening and sealing insulation at longitudinal lap, circumferential lap, butt joints at fittings and on pipe runs, and terminating points for each type of pipe insulation used on the job, and for hot pipelines and cold pipelines, both interior and exterior, even when the same type of insulation is used for these services.

Duct Insulation Display Sections: Display sample sections for rigid and flexible duct insulation used on the job. A display section for duct insulation exposed to weather shall be protected by enclosing with a temporary covering.

1.5 STORAGE

Materials shall be delivered in the manufacturer's unopened containers. Materials delivered and placed in storage shall be provided with protection from weather, humidity, dirt, dust and other contaminants. Insulation material and supplies that become dirty, dusty, wet, or otherwise contaminated may be rejected by the Contracting Officer.

PART 2 PRODUCTS

2.1 GENERAL MATERIALS

Materials shall be compatible and shall not contribute to corrosion, soften, or otherwise attack surfaces to which applied in either the wet or dry state. Materials to be used on stainless steel surfaces shall meet ASTM C 795 requirements. Materials shall be asbestos free and conform to the following:

2.1.1 Adhesives

2.1.1.1 Acoustical Lining Insulation Adhesive

Insulation shall be applied in cut-to-size pieces attached to the interior of the duct with a nonflammable, fire-resistant adhesive conforming to ASTM C 916, Type I. Exposed edges of the liner at the duct ends and at other joints where the lining will be subject to erosion shall be coated with a heavy brush coat of the nonflammable, fire-resistant adhesive to prevent delamination of glass fibers.

2.1.1.2 Mineral Fiber Insulation Cement

Cement shall be in accordance with ASTM C 195.

2.1.1.3 Lagging Adhesive

Lagging adhesives shall be nonflammable and fire-resistant and shall have flame spread and smoke developed ratings of 25/50 when measured in accordance with ASTM E 84. Adhesives shall be either the Class 1 or Class 2 type as defined below. Class 1 adhesive shall be pigmented white or red and be suitable for bonding fibrous glass cloth to faced and unfaced fibrous glass insulation board; for bonding cotton brattice cloth to faced and unfaced fibrous glass insulation board; for sealing edges of and bounding fibrous glass tape to joints of fibrous glass board; or for bonding lagging cloth to thermal insulation. Class 2 adhesive shall be pigmented white and be suitable for attaching fibrous glass insulation to metal surfaces. Lagging adhesives shall be applied in strict accordance with the manufacturer's recommendations.

2.1.2 Contact Adhesive

Adhesive may be dispersed in a nonhalogenated organic solvent with a low flash point (flash point less than minus 1.5 degrees C when tested in accordance with ASTM D 3278) or, dispersed in a nonflammable organic solvent which shall not have a fire point below 93 degrees C. The adhesive shall not adversely affect, initially or in service, the insulation to which it is applied, nor shall it cause any corrosive effect on metal to which it is applied. Any solvent dispersing medium or volatile component of the adhesive shall have no objectionable odor and shall not contain any benzene or carbon tetrachloride. The dried adhesive shall not emit nauseous, irritating, or toxic volatile matters or aerosols when the adhesive is heated to any temperature up to 100 degrees C. The adhesive shall be nonflammable and fire resistant.

2.1.3 Caulking

ASTM C 920, Type S, Grade NS, Class 25, Use A.

2.1.4 Corner Angles

Nominal 0.41 mm aluminum 25 x 25 mm with factory applied kraft backing. Aluminum shall be ASTM B 209, Alloy 3003, 3105, or 5005.

2.1.5 Finishing Cement

Mineral fiber hydraulic-setting thermal insulating cement ASTM C 449/C 449M.

2.1.6 Fibrous Glass Cloth and Glass Tape

Fibrous glass cloth and glass tape shall have flame spread and smoke developed ratings of no greater than 25/50 when measured in accordance with ASTM E 84. Fibrous glass cloth and tape shall be 20 x 20 maximum size mesh. Tape shall be 101.6 mm wide rolls. Class 3 tape shall be 139 grams per square meter.

2.1.7 Staples

Outward clinching type ASTM A 167, Type 304 or 316 stainless steel.

2.1.8 Jackets

ASTM C 921, Type I, maximum moisture vapor transmission **1.148 ng/(s m^2 Pa)**, minimum puncture resistance 50 Beach units on all surfaces except concealed ductwork, where a minimum puncture resistance of 25 Beach units is acceptable. Minimum tensile strength, 626 kg/m width. ASTM C 921, Type II, minimum puncture resistance 25 Beach units, tensile strength minimum 378 kg/m width. Jackets used on insulation exposed in finished areas shall have white finish suitable for painting without sizing.

2.1.8.1 White Vapor Retarder ASJ (All Service Jacket)

For use on hot/cold pipes, ducts, or equipment vapor retarder jackets used on insulation exposed in finished areas shall have white finish suitable for painting without sizing.

2.1.8.2 Aluminum Jackets

Aluminum jackets shall be corrugated, embossed or smooth sheet, 0.41 mm nominal thickness; ASTM B 209, Temper H14, Temper H16, Alloy 3003, 5005, or 3105 with factory applied moisture retarder. Corrugated aluminum jacket shall not be used outdoors. Aluminum jacket securing bands shall be Type 304 stainless steel, 0.38 thick, 12.5 mm wide for pipe under 305 mm diameter and 19 mm wide for pipe over 305 mm and larger diameter. Aluminum jacket circumferential seam bands shall be 50 x 0.41 mm aluminum matching jacket material. Bands for insulation below ground shall be 19 x 0.4mm thick stainless steel, or fiberglass reinforced tape. The jacket may, at the option of the Contractor, be provided with a factory fabricated Pittsburg or "Z" type longitudinal joint. When the "Z" joint is used, the bands at the circumferential joints shall be designed by the manufacturer to seal the joints and hold the jacket in place.

2.1.8.3 Polyvinyl Chloride (PVC) Jackets

Polyvinyl chloride (PVC) jacket and fitting covers shall have high impact strength, UV resistant rating or treatment and moderate chemical resistance with minimum thickness 0.76 mm. Insulation under PVC jacket shall meet jacket manufacturer's written recommendations.

2.1.9 Vapor Retarder Coating

The vapor retarder coating shall be fire and water resistant and appropriately selected for either outdoor or indoor service. Color shall be white. The water vapor permeance of the compound shall not exceed **2.87 ng/(s m^2 Pa)** and shall be determined according to procedure B of ASTM E 96 utilizing apparatus described in ASTM E 96. The coating shall be a nonflammable, fire resistant type. The flash point of the compound shall not be less than 26.6 degrees C and shall be determined in accordance with ASTM D 3278. All other application and service properties shall be in accordance with ASTM C 647.

2.1.10 Wire

Soft annealed ASTM A 580/A 580M Type 302, 304 or 316 stainless steel, 16 or 18 gauge.

2.2 PIPE INSULATION MATERIALS

Pipe insulation materials shall be as follows:

2.2.1 Aboveground Cold Pipeline

Insulation for minus 1.1 degrees to plus 15.5 degrees C shall be as follows:

2.2.1.1 Cellular Glass

ASTM C 552, Type II, and Type III.

2.2.1.2 Flexible Cellular Insulation

ASTM C 534, Type I or II. Type II shall have vapor retarder skin on both sides of the insulation.

2.2.1.3 Phenolic Insulation

ASTM C 1126, Type III. A maximum allowable leachable chloride content shall comply with ASTM C 795 when tested in accordance with ASTM C 871.

2.2.2 Aboveground Hot Pipeline

For aboveground hot pipeline above 15.5 degrees C insulation the following requirements shall be met.

2.2.2.1 Mineral Fiber

ASTM C 547, Class 1 or Class 2 as required for the operating temperature range.

2.2.2.2 Calcium Silicate

ASTM C 533, Type I indoor only, or outdoors above 121 degrees C pipe temperature.

2.2.2.3 Cellular Glass

ASTM C 552, Type II and Type III.

2.2.2.4 Flexible Cellular Insulation

ASTM C 534, Type I or II to 93.3 degrees C service.

2.2.2.5 Phenolic Insulation

ASTM C 1126 Type III to 121 C service. A maximum allowable leachable chloride content shall comply with ASTM C 795 when tested in accordance with ASTM C 871.

2.2.3 Below ground Pipeline Insulation

ASTM C 552, Type II.

2.3 DUCT INSULATION MATERIALS

Duct insulation materials shall be as follows:

2.3.1 Rigid Mineral Fiber

ASTM C 612, Class 1.

2.3.2 Flexible Mineral Fiber

ASTM C 553, Type I, Class B-2.

2.3.3 Cellular Glass

ASTM C 552, Type I.

2.3.4 Phenolic Foam

ASTM C 1126 Type II. A maximum allowable leachable chloride content shall comply with ASTM C 795 when tested in accordance with ASTM C 871.

2.3.5 Flexible Cellular

ASTM C 534 Type II.

2.4 EQUIPMENT INSULATION MATERIALS

Equipment insulation materials shall be as follows:

2.4.1 Cold Equipment Insulation

For temperatures below 15.5 degrees C.

2.4.1.1 Cellular Glass

ASTM C 552, Type I, Type III, or Type IV as required.

2.4.1.2 Flexible Cellular Insulation

ASTM C 534, Type II.

2.4.1.3 Phenolic Foam

ASTM C 1126 Type II. A maximum allowable leachable chloride content shall comply with ASTM C 795 when tested in accordance with ASTM C 871.

2.4.2 Hot Equipment Insulation

For temperatures above 15.5 degrees C.

2.4.2.1 Rigid Mineral Fiber

ASTM C 612, Type 2, 3, 4 or 5 as required for temperature encountered to 982 degrees C.

2.4.2.2 Flexible Mineral Fiber

ASTM C 553, Type 1, 2, 3, 4, 5, 6, or 7 as required for temperature encountered to 649 degrees C.

2.4.2.3 Calcium Silicate

ASTM C 533, Type I, indoors only, or outdoors above 121 degrees C. Pipe shape may be used on diesel engine exhaust piping and mufflers to 649 degrees C.

2.4.2.4 Cellular Glass

ASTM C 552, Type I, Type III, or Type IV as required.

2.4.2.5 Flexible Cellular Insulation

ASTM C 534, Type II, to 93 degrees C.

2.4.2.6 Phenolic Foam

ASTM C 1126 Type II to 121 degrees C. A maximum allowable leachable chloride content shall comply with ASTM C 795 when tested in accordance with ASTM C 871.

PART 3 EXECUTION

3.1 APPLICATION - GENERAL

3.1.1 Installation

Except as otherwise specified, material shall be installed in accordance with the manufacturer's written instructions. Insulation materials shall not be applied until tests specified in other sections of this specification are completed. Material such as rust, scale, dirt and moisture shall be removed from surfaces to receive insulation. Insulation shall be kept clean and dry. Insulation shall not be removed from its shipping containers until the day it is ready to use and shall be returned to like containers or equally protected from dirt and moisture at the end of each workday. Insulation that becomes dirty shall be thoroughly cleaned prior to use. If insulation becomes wet or if cleaning does not restore the surfaces to like new condition, the insulation will be rejected, and shall be immediately removed from the jobsite. Joints shall be staggered on multi layer insulation. Mineral fiber thermal insulating cement shall be mixed with demineralized water when used on stainless steel surfaces. Insulation, jacketing and accessories shall be installed in accordance with MICA-01 standard plates except where modified herein or on the drawings.

3.1.2 Fire stopping

Where pipes and ducts pass through fire walls, fire partitions, above grade floors, and fire rated chase walls, the penetration shall be sealed with fire stopping materials as specified in Section 07270 FIRE STOPPING.

3.1.3 Painting and Finishing

Painting shall be as specified in Section 09900 PAINTING, GENERAL.

3.1.4 Flexible Cellular Insulation

Flexible cellular insulation shall be installed with seams and joints sealed with a contact adhesive. Flexible cellular insulation shall not be used on surfaces greater than 93 degrees C. Seams shall be staggered when applying multiple layers of insulation. Insulation exposed to weather and not shown to have jacketing shall be protected with two coats of UV resistant finish as recommended by the manufacturer after the adhesive is dry.

3.1.5 Welding

No welding shall be done on piping, duct or equipment without written approval of the Contracting Officer. The capacitor discharge welding process may be used for securing metal fasteners to duct.

3.1.6 PipesDucts/Equipment which Require Insulation

Insulation is required, unless stated otherwise, on all pipes, ducts, or equipment, which operate at or below 15.5 degree C and at or above 26.6 degrees C.

3.2 PIPE INSULATION INSTALLATION

3.2.1 Pipe Insulation

3.2.1.1 General

Pipe insulation shall be installed on aboveground hot and cold pipeline systems as specified below to form a continuous thermal retarder, including straight runs, fittings and appurtenances unless specified otherwise. Installation shall be with full length units of insulation and using a single cut piece to complete a run. Cut pieces or scraps abutting each other shall not be used. Pipe insulation shall be omitted on the following:

a. Pipe used solely for fire protection.

b. Chromium plated pipe to plumbing fixtures. However, fixtures for use by the physically handicapped shall have the hot water supply and drain, including the trap, insulated where exposed.

c. Vertical Portions of interior roof drains.

d. Sanitary drain lines.

e. Unions in pipe above 15.5 degrees C.

f. Strainers in pipe above 15.5 degrees C.

g. Check valves in pipe above 15.5 degrees C.

h. Air chambers.

3.2.1.2 Pipes Passing Through Sleeves

a. Pipe insulation shall be continuous through the sleeve.

b. An aluminum jacket with factory applied moisture retarder shall be provided over the insulation wherever penetrations require sealing.

c. Where penetrating interior walls, the aluminum jacket shall extend 51 millimeters beyond either side of the wall and shall be secured on each end with a band.

d. Where penetrating floors, the aluminum jacket shall extend from a point below the backup material to a point 254 millimeters above the floor with one band at the floor and one not more than 25 mm from the end of the aluminum jacket.

e. Where penetrating waterproofed floors, the aluminum jacket shall extend from below the backup material to a point 51 millimeters above the flashing with a band 25 mm from the end of the aluminum jacket.

f. Where penetrating exterior walls, the aluminum jacket required for pipe exposed to weather shall continue through the sleeve to a point 51 millimeters beyond the interior surface of the wall.

g. Where penetrating roofs, pipe shall be insulated as required for interior service to a point flush with the top of the flashing and sealed with vapor retarder coating. The insulation for exterior application shall butt tightly to the top of flashing and interior insulation. The exterior aluminum jacket shall extend 51 millimeters down beyond the end of the insulation to form a counter flashing. The flashing and counter flashing shall be sealed underneath with caulking.

h. In high abuse areas such as janitor closets and traffic areas in equipment rooms, kitchens, and mechanical rooms, aluminum jackets shall be utilized. Pipe insulation to the 1.5 m level shall be protected. Other areas which specifically require protection to the **1.5** m level are required to be insulated . These areas will be specified by the designer

3.2.1.3 Pipes Passing Through Hangers

a. Insulation, whether hot or cold application, shall be continuous through hangers. All horizontal pipes 51 millimeters and smaller shall be supported on hangers with the addition of a Type 40 protection shield to protect the insulation in accordance with MSS SP-69. Whenever insulation shows signs of being compressed, or when the insulation or jacket shows visible

signs of distortion at or near the support shield, insulation inserts as specified below for piping larger than 51 millimeters shall be installed.

b. Horizontal pipes larger than 51 millimeters at 15.5 degrees C and above shall be supported on hangers in accordance with MSS SP-69, and Section 15400 PLUMBING, GENERAL PURPOSE.

c. Horizontal pipes larger than 51 millimeters and below 15.5 degrees C shall be supported on hangers with the addition of a Type 40 protection shield in accordance with MSS SP-69. An insulation insert of cellular glass or calcium silicate shall be installed above each shield. The insert shall cover not less than the bottom 180 degree arc of the pipe. Inserts shall be the same thickness as the insulation, and shall extend 51 millimeters on each end beyond the protection shield. When insulation inserts are required per the above, and the insulation thickness is less than 25 mm, wooden or cork dowels or blocks may be installed between the pipe and the shield to prevent the weight of the pipe from crushing the insulation, as an option to installing insulation inserts. The insulation jacket shall be continuous over the wooden dowel, wooden block, or insulation insert.

d. Vertical pipes shall be supported with either Type 8 or Type 42 riser clamps with the addition of two Type 40 protection shields in accordance with MSS SP-69 covering the 360 degree arc of the insulation. An insulation insert of cellular glass or calcium silicate shall be installed between each shield and the pipe. The insert shall cover the 360 degree arc of the pipe. Inserts shall be the same thickness as the insulation, and shall extend 51 millimeters on each end beyond the protection shield. When insulation inserts are required per the above, and the insulation thickness is less than 25 mm, wooden or cork dowels or blocks may be installed between the pipe and the shield to prevent the hanger from crushing the insulation, as an option instead of installing insulation inserts. The insulation jacket shall be continuous over the wooden dowel, wooden block, or insulation insert. The vertical weight of the pipe shall be supported with hangers located in a horizontal section of the pipe. When the pipe riser is longer than 9 m, the weight of the pipe shall be additionally supported with hangers in the vertical run of the pipe which are directly clamped to the pipe, penetrating the pipe insulation. These hangers shall be insulated and the insulation jacket sealed as indicated herein for anchors in a similar service.

e. Inserts shall be covered with a jacket material of the same appearance and quality as the adjoining pipe insulation jacket, shall overlap the adjoining pipe jacket 38 millimeters, and shall be sealed as required for the pipe jacket. The jacket material used to cover inserts in flexible cellular insulation shall conform to ASTM C 921, Type 1, and is allowed to be of a different material than the adjoining insulation material.

3.2.1.4 Pipes Passing Through Walls

a. For hot water pipes supplying lavatories or other similar heated service which requires insulation, the insulation shall be terminated on the backside of the finished wall. The insulation termination shall be protected with two coats of vapor barrier coating with a minimum total thickness of 1.6 mm applied with glass tape embedded between coats (if applicable). The coating shall extend out onto the insulation 51 millimeters and shall seal the end of the insulation. Glass tape seams shall overlap 25 mm. Caulk the annular space between the pipe and wall penetration. Cover the pipe and wall penetration with a properly

sized (well fitting) escutcheon plate. The escutcheon plate shall overlap the wall penetration at least 9.5 mm.

b. For domestic cold water pipes requiring insulation, the insulation shall be terminated on the finished side of the wall (i.e. insulation must cover the pipe throughout the wall penetration). The insulation shall be protected with two coats of vapor barrier coating with a minimum total thickness of 1.6 mm. The coating shall extend out onto the insulation 51 millimeters and shall seal the end of the insulation. Caulk the annular space between the pipe and wall penetration. Cover the pipe and wall penetration with a properly sized (well fitting) escutcheon plate. The escutcheon plate shall overlap the wall penetration by at least 9.5 mm.

3.2.1.5 Flexible Cellular Pipe Insulation

Flexible cellular pipe insulation shall be tubular form for pipe sizes **152 millimeters** and less. Type II sheet insulation used on pipes larger than **152 millimeters** shall not be stretched around the pipe. On pipes larger than **305 millimeters**, adhere insulation directly to the pipe on the lower 1/3 of the pipe. Seams shall be staggered when applying multiple layers of insulation. Sweat fittings shall be insulated with miter-cut pieces the same size as on adjacent piping. Screwed fittings shall be insulated with sleeved fitting covers fabricated from miter-cut pieces and shall be overlapped and sealed to the adjacent pipe insulation.

3.2.2 Aboveground Cold Pipelines

The following shall be included for aboveground cold pipelines minus 1.1 degrees to plus 15.5 degrees C:

a. Domestic cold water.

b. Make-up water.

c. Horizontal and vertical portions of interior roof drains.

d. Refrigerant suction lines.

e. Chilled water.

f. Dual temperature water, i.e. HVAC hot/chilled water.

3.2.2.1 Insulation Thickness

Insulation thickness for cold pipelines shall be determined using Table I.

Table I - Cold Piping Insulation Thickness
Pipe Size (millimeters)

Type of Service	Material	Runouts up to 51 mm*	25 mm & less	32 - 51 mm	63.5 - 101.6 mm	127 - 152.4 mm	203 mm & larger
Cold domestic water, above and below ceilings	CG	38	38	38	38	38	38
	FC	9.5	9.5	9.5	9.5	9.5	9.5
	PF	9.5	9.5	9.5	9.5	9.5	9.5
Exposed lavatory drains exposed domestic water piping & drains to areas for handicap personnel	FC	12.7	12.7	12.7	12.7	3/4	3/4
	MF	12.7	25	25	38	38	38

*When runouts to terminal units exceed 3.65 m, the entire length of runout shall be insulated like main feed pipe.

LEGEND:

PF - Phenolic Foam
CG - Cellular Glass
CS - Calcium Silicate
MF - Mineral Fiber
FC - Flexible Cellular

3.2.2.2 Jacket for Fibrous, Cellular Glass, and Phenolic Foam Insulated Pipe

Insulation shall be covered with a factory applied vapor retarderjacket or field applied seal welded PVC jacket. Insulation inside the building shown to be protected with an aluminum jacket shall have the insulation and vapor retarder jacket installed as specified herein. The aluminum jacket shall be installed as specified for piping exposed to weather, except sealing of the laps of the aluminum jacket is not required. In high abuse areas such as janitor closets and traffic areas in equipment rooms, kitchens, and mechanical rooms, aluminum jackets shall be utilized. Pipe insulation to the 1.5 m level will be protected. Other areas which specifically require protection to the 1.5 m level are required to be insulated. These areas will be specified by the designer.

3.2.2.3 Insulation for Straight Runs (Fibrous, Cellular Glass and Phenolic Foam)

a. Insulation shall be applied to the pipe with joints tightly butted. The ends of fibrous insulation shall be sealed off with vapor retarder coating at intervals not to exceed 4.6 m.

b. Longitudinal laps of the jacket material shall overlap not less than 38 millimeters. Butt strips 76 millimeters wide shall be provided for circumferential joints.

c. Laps and butt strips shall be secured with adhesive and stapled on 101 mm centers if not factory self-sealing.

d. Factory self-sealing lap systems may be used when the ambient temperature is between 4.4 degrees and 49 degrees C during installation. The lap system shall be installed in accordance with manufacturer's recommendations. Stapler shall be used only if specifically recommended by the manufacturer. Where gaps occur, the section shall be replaced or the gap repaired by applying adhesive under the lap and then stapling.

e. All Staples, including those used to repair factory self-seal lap systems, shall be coated with a vapor retarder coating. All seams, except those on factory self-seal systems shall be coated with vapor retarder coating.

f. Breaks and punctures in the jacket material shall be patched by wrapping a strip of jacket material around the pipe and securing it with adhesive, stapling, and coating with vapor retarder coating. The patch shall extend not less than 38 millimeters past the break.

g. At penetrations such as thermometers, the voids in the insulation shall be filled and sealed with vapor retarder coating.

3.2.2.4 Insulation for Fittings and Accessories

a. Pipe insulation shall have ends thoroughly coated with a vapor retarder coating not less than 152 millimeters from each flange, union, valve, anchor, or fitting in all directions.

b. Precut, preformed insulation for placement over fittings, flanges, unions, valves, anchors, and mechanical couplings shall be used. Precut, preformed insulation shall exhibit the same properties as the adjoining pipe insulation. Where precut/preformed is unavailable, rigid preformed pipe insulation sections may be segmented into the shape required. Insulation of the same thickness and conductivity as the adjoining pipe insulation shall be used. If nesting size insulation is used, the insulation shall be overlapped 51 millimeters or one pipe diameter. Loose fill mineral fiber or insulating cement shall be used to fill the voids. Elbows insulated using segments shall not have less than 3 segments per elbow.

c. Upon completion of installation of insulation on flanges, unions, valves, anchors, fittings and accessories, terminations and insulation not protected by factory vapor retarder jackets or PVC fitting covers shall be protected with two coats of vapor retarder coating with a minimum total thickness of 1.6 mm, applied with glass tape embedded between coats. Tape seams shall overlap 25 mm. The coating shall extend out onto the adjoining pipe insulation 51 millimeters.

d. Anchors attached directly to the pipe shall be insulated for a sufficient distance to prevent condensation but not less than 152 millimeters from the insulation surface.

e. Flexible connections at pumps and other equipment shall be insulated with 15 mm flexible cellular insulation, unless otherwise indicated.

f. Insulation shall be marked showing the location of unions, strainers, and check valves.

3.2.2.5 Optional PVC Fitting Covers

At the option of the Contractor, premolded, one or two piece PVC fitting covers may be used in lieu of the vapor retarder and embedded glass tape. Factory premolded insulation segments shall be used under the fitting covers for elbows. Insulation segments shall be the same thickness as adjoining pipe insulation and the insulation shall be protected with one coat of vapor retarder coating under the PVC cover. The covers shall be secured by PVC vapor retarder tape, adhesive, seal-welding or with tacks made for securing PVC covers. Seams in the cover, and tacks and laps to adjoining pipe insulation jacket, shall be sealed with vapor retarder tape to ensure that the assembly has a continuous vapor seal.

3.2.3 Aboveground Hot Pipelines

For hot pipelines above 15.5 degrees C the following shall be included:

a. Domestic hot water.

b. Steam.

c. Condensate.

d. Hot water heating.

f. Water defrost lines in refrigerated rooms.

3.2.3.1 Insulation Thickness

Insulation thickness for hot pipelines shall be determined using Table II.

LEGEND:
PF - Phenolic Foam
CG - Cellular Glass
CS - Calcium Silicate
MF - Mineral Fiber
FC - Flexible Cellular

Table II - Hot Piping Insulation Thickness
Pipe Size (millimeters)

Type of Service (degrees C)	Material	Runouts up to 51 mm	25 mm & less	31.8 - 51 mm	63.5 - 101 mm	127 - 152 mm	203 mm & larger
Hot domestic water supply & recirculating system	CG	38	38	38	38	38	38
	FC	12.7	25	25	38	38	38
	PF	12.7	25	25	25	25	25
	MF	12.7	25	25	38	38	38

(93 C max)							
Heating hot	CG	38	38	51	51	51	63.5
water,	PF	12.7	25	25	25	25	38
Supply &	CS	25	38	51	63.5	63.5	63.5
return	MF	12.7	38	38	51	63.5	76
(121 C max)							

*When runouts to terminal units exceed 3.65 m, the entire length of runout shall be insulated like the main feed pipe.

3.2.3.2 Jacket for Insulated Pipe

Insulation shall be covered, in accordance with manufacturer's recommendations, with a factory applied Type II jacket or field applied aluminum where required or seal welded PVC.

3.2.3.3 Insulation for Straight Runs

a. Insulation shall be applied to the pipe with joints tightly butted.

b. Longitudinal laps of the jacket material shall overlap not less than 38 millimeters, and butt strips 76 millimeters wide shall be provided for circumferential joints.

c. Laps and butt strips shall be secured with adhesive and stapled on 101.6 mm centers if not factory self-sealing. Adhesive may be omitted where pipe is concealed.

d. Factory self-sealing lap systems may be used when the ambient temperature is between 4.4 degrees and 49 degrees C and shall be installed in accordance with manufacturer's instructions. Laps and butt strips shall be stapled whenever there is non-adhesion of the system. Where gaps occur, the section shall be replaced or the gap repaired by applying adhesive under the lap and then stapling.

e. Breaks and punctures in the jacket material shall be patched by wrapping a strip of jacket material around the pipe and be secured with adhesive and stapled on 101.6 mm centers if not factory self-sealing. Adhesive may be omitted where pipe is concealed. Patch shall extend not less than 38 millimeters past the break.

f. Flexible cellular pipe insulation shall be installed by slitting tubular sections and applying onto piping or tubing. Alternately, whenever possible, slide unslit sections over the open ends of piping or tubing. All seams and butt joints shall be secured and sealed with adhesive. When using self seal products only the butt joints shall be secured with adhesive. Insulation shall be pushed on the pipe, never pulled. Stretching of insulation may result in open seams and joints. All edges shall be clean cut. Rough or jagged edges of the insulation shall not be permitted. Proper tools such as sharp knives shall be used. Type II sheet insulation when used on pipe larger than 152 millimeters shall not be stretched around the pipe. On pipes larger than 305 millimeters, adhere sheet insulation directly to the pipe on the lower 1/3 of the pipe.

3.2.3.4 Insulation for Fittings and Accessories

a. The run of the line pipe insulation shall have the ends brought up to the item.

b. Insulation of the same thickness and conductivity as the adjoining pipe insulation, either premolded or segmented, shall be placed around the item abutting the adjoining pipe insulation, or if nesting size insulation is used, overlapping 51 millimeters or one pipe diameter. Loose fill mineral fiber or insulating cement shall be used to fill the voids. Insulation for elbows less than 76 mm size shall be premolded. Insulation for elbows 76 mm size and larger shall be either premolded or segmented. Elbows insulated using segments shall have not less than 3 segments per elbow. Insulation may be wired or taped on until finish is applied.

c. Upon completion of installation of insulation on flanges, unions, valves, anchors, fittings and accessories, terminations and insulation not protected by factory vapor retarder jackets or PVC fitting covers shall be protected with two coats of Class 1 adhesive applied with glass tape embedded between coats. Tape seams shall overlap 25 mm. Adhesive shall extend onto the adjoining insulation not less than 51 millimeters. The total dry film thickness shall be not less than 1.6 mm.

d. Insulation terminations shall be tapered to unions at a 45-degree angle.

e. At the option of the Contractor, factory premolded one- or two-piece PVC fitting covers may be used in lieu of the adhesive and embedded glass tape. Factory premolded segments or factory or field cut blanket insert insulation segments shall be used under the cover and shall be the same thickness as adjoining pipe insulation. The covers shall be secured by PVC vapor retarder tape, adhesive, seal-welding or with tacks made for securing PVC covers.

3.2.4 Piping Exposed to Weather

Piping exposed to weather shall be insulated and jacketed as specified for the applicable service inside the building. After this procedure, an aluminum jacket shall be applied. PVC jacketing requires no factory applied jacket beneath it. Flexible cellular insulation exposed to weather shall be treated in accordance with paragraph PIPE INSULATION MATERIALS.

3.2.4.1 Aluminum Jacket

The jacket for hot piping may be factory applied. The jacket shall overlap not less than 51 millimeters at longitudinal and circumferential joints and shall be secured with bands at not more than 305 mm centers. Longitudinal joints shall be overlapped down to shed water and located at 4 or 8 o'clock positions. Joints on piping 15.5 degrees C and below shall be sealed with caulking while overlapping to prevent moisture penetration. Where jacketing on piping 15.5 degrees C and below abuts an uninsulated surface, joints shall be caulked to prevent moisture penetration. Joints on piping above 15.5 degrees C shall be sealed with a moisture retarder.

3.2.4.2 Insulation for Fittings

Flanges, unions, valves, fittings, and accessories shall be insulated and finished as specified for the applicable service. Two coats of an emulsion type weatherproof mastic recommended by the insulation

manufacturer shall be applied with glass tape embedded between coats. Tape overlaps shall be not less than 25 mm and the adjoining aluminum jacket not less than 51 millimeters. Factory preformed aluminum jackets may be used in lieu of the above. Molded PVC fitting covers shall be used with PVC lagging and adhesive welded moisture tight.

3.2.4.3 PVC Lagging

PVC lagging shall be ultraviolet resistant and adhesive welded vapor tight with manufacturer's recommended adhesive. Installation shall include provision for thermal expansion.

3.3 DUCT INSULATION INSTALLATION

Except for oven hood exhaust duct insulation, corner angles shall be installed on external corners of insulation on ductwork in exposed finished spaces before covering with jacket. Duct insulation shall be omitted on exposed supply and return ducts in air conditioned spaces unless otherwise shown. Air conditioned spaces shall be defined as those spaces directly supplied with cooled conditioned air (or provided with a cooling device such as a fan-coil unit) and heated conditioned air (or provided with a heating device such as a unit heater, radiator or convector).

3.3.1 Duct Insulation Thickness

Duct insulation thickness shall be in accordance with Table III.

Table III - Minimum Duct Insulation (millimeters)

Cold Air Ducts	51
Relief Ducts	38
Fresh Air Intake Ducts	38
Warm Air Ducts	51
Relief Ducts	38
Fresh Air Intake Ducts	38

3.3.2 Insulation and Vapor Retarder for Cold Air Duct

Insulation and vapor retarder for cold air duct below 15.5 degrees C: Ducts and associated equipment shall be insulated to a thickness which is in accordance with Table III. The following shall be insulated:

a. Supply ducts.

b. Return air ducts.

c. Relief ducts.

d. Flexible runouts (field-insulated).

e. Plenums.

f. Duct-mounted coil casings.

g. Coil headers and return bends.

h. Coil casings.

i. Fresh air intake ducts.

j. Filter boxes.

k. Mixing boxes (field-insulated).

l. Supply fans (field-insulated).

m. Site-erected air conditioner casings.

n. Ducts exposed to weather.

o. Combustion air intake ducts.

Insulation for rectangular ducts shall be flexible type where concealed, minimum density 12kg/cuM (3/4 pcf) and rigid type where exposed, minimum density 48kg/cuM (3 pcf). Insulation for round/oval ducts shall be flexible type, minimum density 3/4 pcf with a factory Type I jacket; or, a semi rigid board, minimum density 48kg/cuM (3 pcf), formed or fabricated to a tight fit, edges beveled and joints tightly butted and staggered, with a factory applied Type I all service jacket. Insulation for exposed ducts shall be provided with either a white, paintable, factory-applied Type I jacket or a vapor retarder jacket coating finish as specified. Fibrous and cellular glass insulation on concealed duct shall be provided with a factory-applied Type I vapor retarder jacket. The total dry film thickness shall be approximately 1.6 mm. Duct insulation shall be continuous through sleeves and prepared openings except fire wall penetrations. Duct insulation terminating at fire dampers, shall be continuous over the damper collar and retaining angle of fire dampers, which are exposed to unconditioned air and which may be prone to condensate formation. Duct insulation and vapor retarder shall cover the collar, neck, and any uninsulated surfaces of diffusers, registers and grills. Vapor retarder materials shall be applied to form a complete unbroken vapor seal over the insulation.

3.3.2.1 Installation on Concealed Duct

a. For rectangular, oval or round ducts, insulation shall be attached by applying Class 2 adhesive around the entire perimeter of the duct in 152 mm wide strips on 305 mm centers.

b. For rectangular and oval ducts, 635 millimeters and larger insulation shall be additionally secured to bottom of ducts by the use of mechanical fasteners. Fasteners shall be spaced on 457 mm centers and not more than 457 millimeters from duct corners.

c. For rectangular, oval and round ducts, mechanical fasteners shall be provided on sides of duct risers for all duct sizes. Fasteners shall be spaced on 457 mm centers and not more than 457 millimeters from duct corners.

d. Insulation shall be impaled on the mechanical fasteners where used and shall be pressed thoroughly into the adhesive. Care shall be taken to ensure vapor retarder jacket joints overlap 51 millimeters. The insulation shall not be compressed to a thickness less than that specified. Insulation shall be carried over standing seams and trapeze-type duct hangers.

e. Self-locking washers shall be installed where mechanical fasteners are used. The pin shall be trimmed back and bent over.

f. Jacket overlaps shall be secured under the overlap with Class 2 adhesive and stapled on 101.6 mm centers. Staples and seams shall be coated with a brush coat of vapor retarder coating.

g. Breaks in the jacket material shall be covered with patches of the same material as the vapor retarder. The patches shall extend not less than 51 millimeters beyond the break or penetration in all directions and shall be secured with Class 2 adhesive and staples. Staples and joints shall be sealed with a brush coat of vapor retarder coating.

h. At jacket penetrations such as hangers, thermometers, and damper operating rods, voids in the insulation shall be filled and the penetration sealed with a brush coat of vapor retarder coating.

i. Insulation terminations and pin punctures shall be sealed and flashed with a reinforced vapor retarder coating finish. The coating shall overlap the adjoining insulation and uninsulated surface 51 millimeters. Pin puncture coatings shall extend 51 millimeters from the puncture in all directions.

j. Where insulation standoff brackets occur, insulation shall be extended under the bracket and the jacket terminated at the bracket.

3.3.2.2 Installation on Exposed Duct Work

a. For rectangular ducts, rigid insulation shall be secured to the duct by mechanical fasteners on all four sides of the duct, spaced not more than 305 millimeters apart and not more than 76 millimeters from the edges of the insulation joints. A minimum of two rows of fasteners shall be provided for each side of duct 305 millimeters and larger. One row shall be provided for each side of duct less than 305 millimeters.

b. Duct insulation shall be formed with minimum jacket seams. Each piece of rigid insulation shall be fastened to the duct using mechanical fasteners. When the height of projections is less than the insulation thickness, insulation shall be brought up to standing seams, reinforcing, and other vertical projections and shall not be carried over. Vapor retarder jacket shall be continuous across seams, reinforcing, and projections. When height of projections is greater than the insulation thickness, insulation and jacket shall be carried over.

c. Insulation shall be impaled on the fasteners; self-locking washers shall be installed and the pin trimmed and bent over.

d. Joints in the insulation jacket shall be sealed with a 101.6 mm wide strip of the same material as the vapor retarder jacket. The strip shall be secured with Class 2 adhesive and stapled. Staples and seams shall be sealed with a brush coat of vapor retarder coating.

e. Breaks and ribs or standing seam penetrations in the jacket material shall be covered with a patch of the same material as the jacket. Patches shall extend not less than 51 millimeters beyond the break or penetration and shall be secured with Class 2 adhesive and stapled. Staples and joints shall be sealed with a brush coat of vapor retarder coating.

f. At jacket penetrations such as hangers, thermometers, and damper operating rods, the voids in the insulation shall be filled and the penetrations sealed with a brush coat of vapor retarder coating.

g. Insulation terminations and pin punctures shall be sealed and flashed with a reinforced vapor retarder coating finish. The coating shall overlap the adjoining insulation and uninsulated surface 51 millimeters. Pin puncture coatings shall extend 51 millimeters from the puncture in all directions.

h. Oval and round ducts, flexible type, shall be insulated with factory Type I jacket insulation with minimum density of 12kg/cuM (3/4 pcf), attached by applying Class 2 adhesive around the entire perimeter of the duct in 152 mm wide stripe on 305 mm centers.

3.3.3 Insulation for Warm Air Duct

For warm air ducts above 15.5 degrees C, ducts and associated equipment shall be insulated to a thickness which is in accordance with Table III. The following shall be insulated:

a. Supply ducts.

b. Return air ducts.

c. Relief air ducts.

d. Flexible runouts (field insulated).

e. Plenums.

f. Duct-mounted coil casings.

g. Coil-headers and return bends.

h. Coil casings.

i. Fresh air intake ducts.

j. Filter boxes.

k. Mixing boxes.

l. Supply fans.

m. Site-erected air conditioner casings.

n. Ducts exposed to weather.

Insulation for rectangular ducts shall be flexible type where concealed, minimum density 12kg/cuM (3/4 pcf); and rigid type where exposed, minimum density 48kg/cuM (3 pcf). Insulation on exposed ducts shall be provided with a white, paintable, factory-applied Type II jacket, or finished with Class 1 adhesive finish. Flexible type insulation shall be used for round ducts, minimum density 12kg/cuM (3/4 pcf) with a factory-applied Type II jacket. Insulation on concealed duct shall be provided with a factory-applied Type II jacket. Class 1 adhesive finish where indicated to be used shall be accomplished by applying two coats of Class 1 adhesive with a layer of glass cloth embedded between the coats. The total dry film thickness shall be approximately 1.6 mm. Duct insulation shall be continuous through sleeves and prepared openings. Duct insulation shall terminate at fire dampers and flexible connections.

3.3.3.1 Installation on Concealed Duct

a. For rectangular, oval and round ducts, insulation shall be attached by applying Class 2 adhesive around the entire perimeter of the duct in 152 mm wide strips on 305 mm centers.

b. For rectangular and oval ducts 610 millimeters and larger, insulation shall be secured to the bottom of ducts by the use of mechanical fasteners. Fasteners shall be spaced on 457 mm centers and not more than 457 millimeters from duct corner.

c. For rectangular, oval and round ducts, mechanical fasteners shall be provided on sides of duct risers for all duct sizes. Fasteners shall be spaced on 457 mm centers and not more than 457 millimeters from duct corners.

d. The insulation shall be impaled on the mechanical fasteners where used and shall be pressed thoroughly into the adhesive. The insulation shall not be compressed to a thickness less than that specified. Insulation shall be carried over standing seams and trapeze-type hangers.

e. Self-locking washers shall be installed where mechanical fasteners are used and the pin trimmed and bent over.

f. Insulation jacket shall overlap not less than 51 millimeters at joints and the lap shall be secured with Class 2 adhesive under the lap and stapled on 101.6 mm centers.

3.3.3.2 Installation on Exposed Duct

a. For rectangular ducts, the rigid insulation shall be secured to the duct by the use of mechanical fasteners on all four sides of the duct, spaced not more than 305 millimeters apart and not more than 76 millimeters from the edges of the insulation joints. A minimum of two rows of fasteners shall be provided for each side of duct 305 millimeters and larger and a minimum of one row for each side of duct less than 305 millimeters.

b. Duct insulation with factory-applied jacket shall be formed with minimum jacket seams, and each piece of rigid insulation shall be fastened to the duct using mechanical fasteners. When the height of projection is less than the insulation thickness, insulation shall be brought up to standing seams, reinforcing, and other vertical projections and shall not be carried over the projection. Jacket shall be continuous across seams, reinforcing, and projections. Where the

height of projections is greater than the insulation thickness, insulation and jacket shall be carried over the projection.

c. Insulation shall be impaled on the fasteners; self-locking washers shall be installed and pin excess clipped and bent over.

d. Joints on jacketed insulation shall be sealed with a 101.6 mm wide strip of the same material as the jacket. The strip shall be secured with Class 2 adhesive and stapled.

e. Breaks and penetrations in the jacket material shall be covered with a patch of the same material as the jacket. Patches shall extend not less than 51 millimeters beyond the break or penetration and shall be secured with Class 2 adhesive and stapled.

f. Insulation terminations and pin punctures shall be sealed and flashed with a Class 1 adhesive. Two coats of Class 1 adhesive coating shall be applied with glass cloth embedded between coats. The total coating shall have a dry film thickness of approximately 1.6 mm and shall overlap the adjoining insulation and uninsulated surface 51 millimeters.

g. Oval and round ducts, flexible type, shall be insulated with factory Type I jacket insulation, minimum density of 12kg/cuM (3/4 pcf) attached by applying Class 2 adhesive around the entire perimeter of the duct in 152 mm wide stripe on 305 mm center. Joints shall be sealed with a 101.6 mm wide strip of the same material as the jacket. The strip shall be secured with Class 2 adhesive and stapled.

3.3.4 Ducts Handling Air for Dual Purpose

For air handling ducts for dual purpose below and above 15.5 degrees C, ducts shall be insulated as specified for cold air duct.

3.3.5 Insulation for Evaporative Cooling Duct

Evaporative cooling supply duct located in spaces not evaporatively cooled, shall be insulated. Material and installation requirements shall be as specified for duct insulation for warm air duct.

3.3.6 Duct Test Holes

After duct systems have been tested, adjusted, and balanced, breaks in the insulation and jacket shall be repaired in accordance with the applicable section of this specification for the type of duct insulation to be repaired.

3.3.7 Duct Exposed to Weather

3.3.7.1 Installation

Ducts exposed to weather shall be insulated and finished as specified for the applicable service for exposed duct inside the building. After the above is accomplished, the insulation shall then be further finished as detailed in the following subparagraphs.

3.3.7.2 Round Duct

Aluminum jacket with factory applied moisture retarder shall be applied with the joints lapped not less than 76 millimeters and secured with bands located at circumferential laps and at not more than 305 mm intervals throughout. Horizontal joints shall lap down to shed water and located at 4 or 8 o'clock position. Joints shall be sealed with caulking to prevent moisture penetration. Where jacketing abuts an uninsulated surface, joints shall be sealed with caulking.

3.3.7.3 Fittings

Fittings and other irregular shapes shall be finished as specified for rectangular ducts.

3.3.7.4 Rectangular Ducts

Two coats of weatherproof mastic shall be applied to the entire surface with a layer of glass cloth embedded between coats. Glass cloth overlaps at joints and adjoining surfaces shall be not less than 51 millimeters. Each coat of weatherproof mastic shall be 1.6 mm minimum thickness. The top of the exterior duct work shall be built up with insulation in such a manner as to ensure a positive drain of any rain water which may appear. The minimum pitch of the built up section shall be in accordance with the recommendation of the manufacturer of the vapor retarder/weatherproof mastic. Care should be taken in the construction of the built up section so that no low areas appear; this shall ensure no "pooling" of water on the vapor retarder which leads to premature degradation of the retarder and subsequent deterioration of the insulation.

3.4 EQUIPMENT INSULATION INSTALLATION

3.4.1 General

Removable insulation sections shall be provided to cover parts of equipment which must be opened periodically for maintenance including vessel covers, fasteners, flanges and accessories. Equipment insulation shall be omitted on the following:

a. Handholes.

b. Boiler manholes.

c. Cleanouts.

d. ASME stamps.

e. Manufacturer's nameplates.

3.4.2 Insulation for Cold Equipment

Cold equipment below 15.5 degrees C: Insulation shall be furnished on equipment handling media below 15.5 degrees C including the following:

a. Pumps.

b. Refrigeration equipment parts that are not factory insulated.

c. Drip pans under chilled equipment.

d. Cold water storage tanks.

e. Water softeners.

f. Duct mounted coils.

g. Cold and chilled water pumps.

h. Pneumatic water tanks.

i. Roof drain bodies.

j. Air handling equipment parts that are not factory insulated.

k. Expansion and air separation tanks.

3.4.2.1 Insulation Type

Insulation shall be suitable for the temperature encountered. Thicknesses shall be as follows:

a. Equipment handling media between 1.6 and 15.5 degrees C: 51 mm thick cellular glass, 38 mm thick flexible cellular, or 25 mm thick phenolic foam.

b. Equipment handling media between minus 17.8 degree C and 1 degrees C: 89 mm thick cellular glass, 63.5 mm flexible cellular, or 38 mm thick phenolic foam.

c. Equipment handling media between minus 1 degrees C and -17 degree C: 101.6 mm thick cellular glass 76 mm thick flexible cellular, or 38 mm thick phenolic foam.

3.4.2.2 Pump Insulation

a. Pumps shall be insulated by forming a box around the pump housing. The box shall be constructed by forming the bottom and sides using joints which do not leave raw ends of insulation exposed. Joints between sides and between sides and bottom shall be joined by adhesive with lap strips for rigid mineral fiber and contact adhesive for flexible cellular insulation. The box shall conform to the requirements of MICA-01 plate No. 49 when using flexible cellular insulation. Joints between top cover and sides shall fit tightly forming a female shiplap joint on the side pieces and a male joint on the top cover, thus making the top cover removable.

b. Exposed insulation corners shall be protected with corner angles.

c. Upon completion of installation of the insulation, including removable sections, two coats of vapor retarder coating shall be applied with a layer of glass cloth embedded between the coats. The total dry thickness of the finish shall be 1.6 mm. A parting line shall be provided

between the box and the removable sections allowing the removable sections to be removed without disturbing the insulation coating. Caulking shall be applied to parting line, between equipment and removable section insulation, and at all penetrations.

3.4.2.3 Other Equipment

a. Insulation shall be formed or fabricated to fit the equipment. To ensure a tight fit on round equipment, edges shall be beveled and joints shall be tightly butted and staggered.

b. Insulation shall be secured in place with bands or wires at intervals as recommended by the manufacturer but not more than 305 mm centers except flexible cellular which shall be adhered. Insulation corners shall be protected under wires and bands with suitable corner angles.

c. Cellular glass and phenolic foam insulation shall be set in a coating of bedding compound, and joints shall be sealed with bedding compound as recommended by the manufacturer. Mineral fiber insulation joints shall be filled with finishing cement.

d. Insulation on heads of heat exchangers shall be removable. Removable section joints shall be fabricated using a male-female shiplap type joint. The entire surface of the removable section shall be finished by applying two coats of vapor retarder coating with a layer of glass cloth embedded between the coats. The total dry thickness of the finish shall be 1.6 mm.

e. Exposed insulation corners shall be protected with corner angles.

f. Insulation on equipment with ribs shall be applied over 152 x 152 mm by 12 gauge welded wire fabric which has been cinched in place, or if approved by the Contracting Officer, spot welded to the equipment over the ribs. Insulation shall be secured to the fabric with J-hooks and 51 x 51 mm washers or shall be securely banded or wired in place on 305 mm centers.

3.4.2.4 Vapor Retarder

Upon completion of installation of insulation, penetrations shall be caulked. Two coats of vapor retarder coating shall be applied over insulation, including removable sections, with a layer of glass cloth embedded between the coats. The total dry thickness of the finish shall be 1.6 mm. Caulking shall be applied to parting line between equipment and removable section insulation.

3.4.3 Insulation for Hot Equipment

Insulation shall be furnished on equipment handling media above 15.5 degrees C including the following:

a. Converters.

b. Heat exchangers.

c. Hot water generators.

d. Water heaters.

e. Pumps handling media above 54 degrees C.

f. Fuel oil heaters.

g. Hot water storage tanks.

h. Air separation tanks.

i. Surge tanks.

j. Flash tanks.

k. Feedwater heaters.

l. Unjacketed boilers or parts of boilers.

m. Boiler flue gas connection from boiler to stack (if inside).

n. Induced draft fans.

o. Fly ash and soot collectors.

p. Condensate receivers.

3.4.3.1 Insulation

Insulation shall be suitable for the temperature encountered. Shell and tube-type heat exchangers shall be insulated for the temperature of the shell medium. Insulation thicknesses shall be as follows:

121 degrees Ca. Equipment handling media to 315.5 degrees C: 127 mm thick rigid mineral fiber, mm thick flexible mineral fiber, 152 mm thick calcium silicate, 152 mm thick cellular glass.

b. Equipment handling media above 316 degrees C: Insulate with a thickness of material required to limit the external temperature of the insulation to 49 degrees C except that diesel engine exhaust piping and mufflers shall be covered with 152 mm thick material suitable for 649 degrees C service. Heat transfer calculations shall be submitted to substantiate insulation and thickness selection.

3.4.3.2 Insulation of Pumps

Pumps shall be insulated by forming a box around the pump housing. The box shall be constructed by forming the bottom and sides using joints which do not leave raw ends of insulation exposed. Bottom and sides shall be banded to form a rigid housing which does not rest on the pump. Joints between top cover and sides shall fit tightly. The top cover shall have a joint forming a female shiplap joint on the side pieces and a male joint on the top cover, making the top cover removable. Two coats of Class I adhesive shall be applied over insulation, including removable sections, with a layer of glass cloth embedded between the coats. A parting line shall be provided between the box and the removable sections allowing the removable sections to be removed without disturbing the insulation coating. The

total dry thickness of the finish shall be 1.6 mm. Caulking shall be applied to parting line of the removable sections and penetrations.

3.4.3.3 Other Equipment

a. Insulation shall be formed or fabricated to fit the equipment. To ensure a tight fit on round equipment, edges shall be beveled and joints shall be tightly butted and staggered.

b. Insulation shall be secured in place with bands or wires at intervals as recommended by the manufacturer but not greater than 305 mm centers except flexible cellular which shall be adhered. Insulation corners shall be protected under wires and bands with suitable corner angles.

c. On high vibration equipment, cellular glass insulation shall be set in a coating of bedding compound as recommended by the manufacturer, and joints shall be sealed with bedding compound. Mineral fiber joints shall be filled with finishing cement.

d. Insulation on heads of heat exchangers shall be removable. The removable section joint shall be fabricated using a male-female shiplap type joint. Entire surface of the removable section shall be finished as specified.

e. Exposed insulation corners shall be protected with corner angles.

f. On equipment with ribs, such as boiler flue gas connection, draft fans, and fly ash or soot collectors, insulation shall be applied over 152 x 152 mm by 12 gauge welded wire fabric which has been cinched in place, or if approved by the Contracting Officer, spot welded to the equipment over the ribs. Insulation shall be secured to the fabric with J-hooks and 51 x 51 mm washers or shall be securely banded or wired in place on 305 mm (maximum) centers.

g. On equipment handling media above 316 degrees C, insulation shall be applied in two or more layers with joints staggered.

h. Upon completion of installation of insulation, penetrations shall be caulked. Two coats of Class I adhesive shall be applied over insulation, including removable sections, with a layer of glass cloth embedded between the coats. The total dry thickness of the finish shall be 1.6 mm. Caulking shall be applied to parting line between equipment and removable section insulation.

3.4.4 Equipment Handling Dual Temperature Media

Below and above 15.5 degrees C: Equipment handling dual temperature media shall be insulated as specified for cold equipment.

3.4.5 Equipment Exposed to Weather

3.4.5.1 Installation

Equipment exposed to weather shall be insulated and finished in accordance with the requirements for ducts exposed to weather in paragraph DUCT INSULATION INSTALLATION.

3.4.5.2 Optional Panels

At the option of the Contractor, prefabricated metal insulation panels may be used in lieu of the insulation and finish previously specified. Thermal performance shall be equal to or better than that specified for field applied insulation. Panels shall be the standard catalog product of a manufacturer of metal insulation panels. Fastenings, flashing, and support system shall conform to published recommendations of the manufacturer for weatherproof installation and shall prevent moisture from entering the insulation. Panels shall be designed to accommodate thermal expansion and to support a 1113 N walking load without permanent deformation or permanent damage to the insulation. Exterior metal cover sheet shall be aluminum and exposed fastenings shall be stainless steel or aluminum.

END OF SECTION

SECTION 15190

GAS PIPING SYSTEMS

PART 1 GENERAL

1.1 REFERENCES

The publications listed below form a part of this specification to the extent referenced. The publications are referred to in the text by basic designation only.

AMERICAN GAS ASSOCIATION (AGA)

AGA Mnl	(1994; Addenda/Correction Jan 1996) A.G.A. Plastic Pipe Manual for Gas Service

AMERICAN NATIONAL STANDARDS INSTITUTE

ANSI Z21.45	(1995) Flexible Connectors of Other Than All-Metal Construction for Gas Appliances
ANSI Z21.69	(1992; Z21.69a) Connectors for Movable Gas Appliances

AMERICAN PETROLEUM INSTITUTE (API)

API Spec 6D	(1994; Supple 1 Jun 1996; Supple 2 Dec 1997) Pipeline Valves (Gate, Plug, Ball, and Check Valves)

AMERICAN SOCIETY FOR TESTING AND MATERIALS (ASTM)

ASTM A 539	(1996) Electric-Resistance-Welded Coiled Steel Tubing for Gas and Fuel Oil Lines
ASTM B 88	(1996) Seamless Copper Water Tube
ASTM B 210	(1995) Aluminum and Aluminum-Alloy Drawn Seamless Tubes
ASTM B 210M	(1995)Aluminum and Aluminum-Alloy Drawn Seamless Tubes (Metric)
ASTM B 241/B 241M	(1996) Aluminum and Aluminum-Alloy Seamless Pipe and Seamless Extruded Tube
ASTM B 280	(1995a) Seamless Copper Tube for Air Conditioning and Refrigeration Field Service

ASTM D 2513	(1996a) Thermoplastic Gas Pressure Pipe, Tubing, and Fittings
ASTM D 2517	(1994) Reinforced Epoxy Resin Gas Pressure Pipe and Fittings

AMERICAN SOCIETY OF MECHANICAL ENGINEERS (ASME)

ASME B1.20.1	(1983; R 1992) Pipe Threads, General Purpose (Inch)
ASME B16.3	(1992) Malleable Iron Threaded Fittings
ASME B16.5	(1996; B16.5a) Pipe Flanges and Flanged Fittings NPS 1/2 thru NPS 24
ASME B16.9	(1993) Factory-Made Wrought Steel Buttwelding Fittings
ASME B16.11	(1996) Forged Fittings, Socket-Welding and Threaded
ASME B16.21	(1992) Nonmetallic Flat Gaskets for Pipe Flanges
ASME B16.33	(1990) Manually Operated Metallic Gas Valves for Use in Gas Piping Systems Up to 125 psig (Sizes 1/2 through 2)
ASME B31.1	(1995; B31.1a; B31.1b; B31.1c) Power Piping
ASME B31.2	(1968) Fuel Gas Piping
ASME B36.10M	(1996) Welded and Seamless Wrought Steel Pipe
ASME BPV IX	(1998) Boiler and Pressure Vessel Code; Section IX, Welding and Brazing Qualifications

MANUFACTURERS STANDARDIZATION SOCIETY OF THE VALVE AND FITTINGS INDUSTRY (MSS)

MSS SP-25	(1998) Standard Marking System for Valves, Fittings, Flanges and Unions
MSS SP-58	(1993) Pipe Hangers and Supports - Materials, Design and Manufacture
MSS SP-69	(1996) Pipe Hangers and Supports - Selection and Application

NATIONAL FIRE PROTECTION ASSOCIATION (NFPA)

NFPA 54/ANSI Z223.1	(1996; Errata) National Fuel Gas Code
NFPA 70	(1999) National Electrical Code

THE SOCIETY FOR PROTECTIVE COATING (SSPC)

SSPC SP 6/NACE 3 (1994) Commercial Blast Cleaning

UNDERWRITERS LABORATORIES (UL)

UL Gas&Oil Dir (1996; Supple)Gas and Oil Equipment Directory

1.2 GENERAL REQUIREMENTS

1.2.1 Welding

Piping shall be welded in accordance with qualified procedures using performance qualified welders and welding operators. Procedures and welders shall be qualified in accordance with ASME BPV IX. Welding procedures qualified by others, and welders and welding operators qualified by another employer may be accepted as permitted by ASME B31.1. The Contracting Officer shall be notified at least 24 hours in advance of tests and the tests shall be performed at the work site if practicable. The Contracting Officer shall be furnished with a copy of qualified procedures and a list of names and identification symbols of qualified welders and welding operators. The welder or welding operator shall apply his assigned symbol near each weld he makes as a permanent record. Structural members shall be welded in accordance with Section 05090 WELDING, STRUCTURAL.

1.2.2 Jointing Thermoplastic and Fiberglass Piping

Piping shall be jointed by performance qualified joiners using qualified procedures in accordance with AGA Mnl. Plastic Pipe Manual for Gas Service. The Contracting Officer shall be furnished with a copy of qualified procedures and list of and identification symbols of qualified joiners.

1.2.3 Standard Products

Materials and equipment shall be the standard products of a manufacturer regularly engaged in the manufacture of the products and shall essentially duplicate items that have been in satisfactory use for at least 2 years prior to bid opening. Asbestos or products containing asbestos shall not be used. Manufacturer's descriptive data and installation instructions shall be submitted for approval for compression-type mechanical joints used in joining dissimilar materials and for insulating joints. Valves, flanges and fittings shall be marked in accordance with MSS SP-25.

1.2.4 Verification of Dimensions

The Contractor shall become familiar with all details of the work, verify all dimensions in the field, and shall advise the Contracting Officer of any discrepancy before performing the work.

1.3 SUBMITTALS

Government approval is required for submittals with a "GA" designation; submittals having an "FIO" designation are for information only. The following shall be submitted in accordance with Section 01330 SUBMITTAL PROCEDURES:

SD-01 Data

Qualifications; FIO.

Qualified procedures and a list of names and identification symbols of qualified welders and welding operators.

SD-04 Drawings

Gas Piping System; GA.

Drawings showing location, size and all branches of pipeline; location of all required shutoff valves; and instructions necessary for the installation of connectors and supports.

SD-9 Reports

Testing;GA.

Pressure Tests; GA.

Pressure Tests for Liquified Petroleum Gas;GA.

Test With Gas; GA.

Test reports in booklet form tabulating test and measurements performed. The reports shall be dated after award of this contract, shall state the contractor's name and address, shall name the project and location, and shall list the specific requirements which are being certified.

PART 2 PRODUCTS

2.1 PIPE AND FITTINGS

2.1.1 Steel Pipe, Joints, and Fittings

Steel pipe shall conform to ASME B36.10M. Malleable-iron threaded fittings shall conform to ASME B16.3. Steel pipe flanges and flanged fittings including bolts, nuts, and bolt pattern shall be in accordance with ASME B16.5. Wrought steel buttwelding fittings shall conform to ASME B16.9. Socket welding and threaded forged steel fittings shall conform to ASME B16.11.

2.1.2 Aluminum Alloy Pipe and Tubing, Joints, and Fittings

Aluminum alloy pipe shall conform to ASTM B 241/B 241M, except alloy 5456 shall not be used, and the ends of each length of pipe shall be marked indicating it conforms to NFPA 54/ANSI Z223.1. Pipe joints shall be threaded, flanged, brazed or welded.

Aluminum alloy tubing shall conform to ASTM B 210M, Type A or B, or ASTM B 241/B 241M, Type A or equivalent. Tubing joints shall be made up with gas tubing fittings recommended by the tubing manufacturer.

2.1.3 Copper Tubing, Joints and Fittings

Copper tubing shall conform to ASTM B 88, Type K or L, or ASTM B 280. Tubing joints shall be made up with tubing fittings recommended by the tubing manufacturer.

2.1.4 Steel Tubing, Joints and Fittings

Steel tubing shall conform to ASTM A 539. Tubing joints shall be made up with gas tubing fittings recommended by the tubing manufacturer.

2.1.5 Thermoplastic Pipe, Tubing, Joints, and Fittings

Thermoplastic pipe, tubing, joints and fittings shall conform to ASTM D 2513.

2.1.6 Fiberglass Pipe, Joints, and Fittings

Fiberglass piping systems shall conform to ASTM D 2517.

2.1.7 Sealants for Steel Pipe Threaded Joints

Joint sealing compound shall be listed in UL Gas&Oil Dir, Class 20 or less. Tetrafluoroethylene tape shall conform to UL Gas&Oil Dir.

2.1.8 Identification

Pipe flow markings and metal tags shall be provided as required.

2.1.9 Flange Gaskets

Gaskets shall be nonasbestos compressed material in accordance with ASME B16.21, 1.6 mm thickness, full face or self-centering flat ring type. The gaskets shall contain aramid fibers bonded with styrene butadiene rubber (SBR) or nitrile butadiene rubber (NBR) suitable for a maximum 316 degrees C service. NBR binder shall be used for hydrocarbon service.

2.1.10 Pipe Threads

Pipe threads shall conform to ASME B1.20.1.

2.1.11 Escutcheons

Escutcheons shall be chromium-plated steel or chromium-plated brass, either one piece or split pattern, held in place by internal spring tension or set screw.

2.1.12 Gas Transition Fittings

Gas transition fittings shall be manufactured steel fittings approved for jointing metallic and thermoplastic or fiberglass pipe. Approved transition fittings are those that conform to AGA Mnl requirements for transitions fittings.

2.1.13 Insulating Pipe Joints

2.1.13.1 Insulating Joint Material

Insulating joint material shall be provided between flanged or threaded metallic pipe systems where shown to control galvanic or electrical action.

2.1.13.2 Threaded Pipe Joints

Joints for threaded pipe shall be steel body nut type dielectric unions with insulating gaskets.

2.1.13.3 Flanged Pipe Joints

Joints for flanged pipe shall consist of full face sandwich-type flange insulating gasket of the dielectric type, insulating sleeves for flange bolts, and insulating washers for flange nuts.

2.1.14 Flexible Connectors

Flexible connectors for connecting gas utilization equipment to building gas piping shall conform to ANSI Z21.45. Flexible connectors for movable food service equipment shall conform to ANSI Z21.69.

2.2 VALVES

Valves shall be suitable for shutoff or isolation service and shall conform to the following:

2.2.1 Valves 50 mm and Smaller

Valves 50 mm and smaller shall conform to ASME B16.33 and shall be of materials and manufacture compatible with system materials used.

2.2.2 Valves 65 mm and Larger

Valves 65 mm and larger shall be carbon steel conforming to API Spec 6D, Class 150.

2.3 PIPE HANGERS AND SUPPORTS

Pipe hangers and supports shall conform to MSS SP-58 and MSS SP-69.

2.4 METERS, REGULATORS AND SHUTOFF VALVES

Meters, regulators and shutoff valves shall be as specified in Section 02556 GAS DISTRIBUTION SYSTEM.

PART 3 EXECUTION

3.1 EXCAVATION AND BACKFILLING

Earthwork shall be as specified in Section 02316 EXCAVATION, TRENCHING AND BACKFILLING FOR UTILITIES SYSTEMS.

3.2 GAS PIPING SYSTEM

Gas piping system shall be from the point of delivery, defined as the outlet of the **meter set assembly**, specified in Section 02556 GAS DISTRIBUTION SYSTEM, to the connections to each gas utilization device.

3.2.1 Protection of Materials and Components

Pipe and tube openings shall be closed with caps or plugs during installation. Equipment shall be protected from dirt, water, and chemical or mechanical damage. At the completion of all work, the entire system shall be thoroughly cleaned.

3.2.2 Workmanship and Defects

Piping, tubing and fittings shall be clear and free of cutting burrs and defects in structure or threading and shall be thoroughly brushed and chip-and scale-blown. Defects in piping, tubing or fittings shall not be repaired. When defective piping, tubing, or fittings are located in a system, the defective material shall be replaced.

3.3 PROTECTIVE COVERING

3.3.1 Underground Metallic Pipe

Buried metallic piping shall be protected from corrosion with protective coatings as specified in Section 02556 GAS DISTRIBUTION SYSTEM. When dissimilar metals are joined underground, gas tight insulating fittings shall be used.

3.3.2 Aboveground Metallic Piping Systems

3.3.2.1 Ferrous Surfaces

Shop primed surfaces shall be touched up with ferrous metal primer. Surfaces that have not been shop primed shall be solvent cleaned. Surfaces that contain loose rust, loose mill scale and other foreign substances shall be mechanically cleaned by power wire brushing or commercial sand blasted conforming to SSPC SP 6/NACE 3 and primed with ferrous metal primer or vinyl type wash coat. Primed surface shall be finished with two coats of exterior oil paint or vinyl paint.

3.3.2.2 Nonferrous Surfaces

Except for aluminum alloy pipe, nonferrous surfaces shall not be painted. Surfaces of aluminum alloy pipe and fittings shall be painted to protect against external corrosion where they contact masonry, plaster, insulation, or are subject to repeated wettings by such liquids as water, detergents or sewage. The surfaces shall be solvent-cleaned and treated with vinyl type wash coat. A first coat of aluminum paint and a second coat of alkyd gloss enamel or silicone alkyd copolymer enamel shall be applied.

3.4 INSTALLATION

Installation of the gas system shall be in conformance with the manufacturer's recommendations and applicable provisions of NFPA 54/ANSI Z223.1, AGA Mnl, and as indicated. Pipe cutting shall be done without damage to the pipe. Unless otherwise authorized, cutting shall be done by an approved type of mechanical cutter. Wheel cutters shall be used where practicable. On steel pipe 150 mm and larger, an approved gas cutting and beveling machine may be used. Cutting of thermoplastic and fiberglass pipe shall be in accordance with AGA Mnl.

3.4.1 Metallic Piping Installation

Underground piping shall be buried a minimum of 450 mm below grade. Changes in direction of piping shall be made with fittings only; mitering or notching pipe to form elbows and tees or other similar type construction will not be permitted. Branch connection may be made with either tees or forged branch outlet fittings. Branch outlet fittings shall be forged, flared for improvement of flow where attached to the run, and reinforced against external strains. Aluminum alloy pipe shall not be used in exterior locations or underground.

3.4.2 Metallic Tubing Installation

Metallic tubing shall be installed using gas tubing fittings approved by the tubing manufacturer. Branch connections shall be made with tees. All tubing end preparation shall be made with tools designed for the purpose. Aluminum alloy tubing shall not be used in exterior locations or underground.

3.4.3 Thermoplastic and Fiberglass Piping, Tubing, and Fittings

Thermoplastic and fiberglass piping, tubing, and fittings shall be installed outside and underground only. Piping shall be buried a minimum of 450 mm below grade. The piping shall be installed to avoid excessive stresses due to thermal contraction. Thermoplastic and fiberglass piping shall only be allowed as indicated.

3.4.4 Connections Between Metallic and Plastic Piping

Connections shall be made only outside, underground, and with approved transition fittings.

3.4.5 Piping Buried Under Buildings

Underground piping installed beneath buildings shall be run in a steel pipe casing protected from corrosion with protective coatings as specified in Section 02556 GAS DISTRIBUTION SYSTEM. The casing shall extend at least 100 mm outside the building. The pipe shall have spacers and end bushings to seal at both ends to prevent the entrance of water and escape of gas. A vent line from the annular space shall extend above grade outside to a point where gas will not be a hazard and shall terminate in a rain- and insect-resistant fitting.

3.4.6 Concealed Piping in Buildings

When installing piping which is to be concealed, unions, tubing fittings, running threads, right- and left-hand couplings, bushings, and swing joints made by combinations of fittings shall not be used.

3.4.6.1 Piping in Partitions

Concealed piping shall be located in hollow rather than solid partitions. Tubing passing through walls or partitions shall be protected against physical damage.

3.4.6.2 Piping in Floors

Piping in solid floors except where embedment in concrete is indicated shall be laid in channels suitably covered to permit access to the piping with minimum damage to the building. Piping embedded in concrete shall be surrounded by a minimum of 40 mm of concrete and shall not be in physical contact with other metallic items such as reinforcing rods or electrically neutral conductors. Piping shall not be embedded in concrete slabs containing quickset additives or cinder aggregate.

3.4.7 Aboveground Piping

Aboveground piping shall be run as straight as practicable along the alignment indicated and with a minimum of joints. Piping shall be separately supported. Exposed horizontal piping shall not be installed farther than 150 mm from nearest parallel wall in laundry areas where clothes hanging could be attempted.

3.4.8 Final Gas Connections

Unless otherwise specified, final connections shall be made with rigid metallic pipe and fittings. Flexible connectors may be used for final connections to residential dryers. Flexible connectors may be used for final connections to gas utilization equipment. In addition to cautions listed in instructions required by ANSI standards for flexible connectors, insure that flexible connectors do not pass through equipment cabinet. Provide accessible gas shutoff valve and coupling for each gas equipment item.

3.5 PIPE JOINTS

Pipe joints shall be designed and installed to effectively sustain the longitudinal pull-out forces caused by contraction of the piping or superimposed loads.

3.5.1 Threaded Metallic Joints

Threaded joints in metallic pipe shall have tapered threads evenly cut and shall be made with UL approved graphite joint sealing compound for gas service or tetrafluoroethylene tape applied to the male threads only. Threaded joints up to 40 mm in diameter may be made with approved tetrafluoroethylene tape. Threaded joints up to 50 mm in diameter may be made with approved joint sealing compound. After cutting and before threading, pipe shall be reamed and burrs shall be removed. Caulking of threaded joints to stop or prevent leaks shall not be permitted.

3.5.2 Welded Metallic Joints

Beveling, alignment, heat treatment, and inspection of welds shall conform to ASME B31.2. Weld defects shall be removed and repairs made to the weld, or the weld joints shall be entirely removed and rewelded. After filler metal has been removed from its original package, it shall be protected or stored so that its characteristics or welding properties are not affected adversely. Electrodes that have been wetted or have lost any of their coating shall not be used.

3.5.3 Thermoplastic and Fiberglass Joints

Jointing procedures shall conform to AGA Mnl. Solvent cement or heat of fusion joints shall not be made between different kinds of plastics.

3.5.4 Flared Metallic Tubing Joints

Flared joints in metallic tubing shall be made with special tools recommended by the tubing manufacturer. Flared joints shall be used only in systems constructed from nonferrous pipe and tubing, when experience or tests have demonstrated that the joint is suitable for the conditions, and when adequate provisions are made in the design to prevent separation of the joints. Metallic ball sleeve compression-type tubing fittings shall not be used for tubing joints.

3.5.5 Solder or Brazed Joints

Joints in metallic tubing and fittings shall be made with materials and procedures recommended by the tubing supplier. Joints shall be brazed with material having a melting point above 538 degrees C. Brazing alloys shall not contain phosphorous.

3.5.6 Joining Thermoplastic or Fiberglass to Metallic Piping or Tubing

When compression type mechanical joints are used, the gasket material in the fittings shall be compatible with the plastic piping and with the gas in the system. An internal tubular rigid stiffener shall be used in conjunction with the fitting, and the stiffener shall be flush with end of the pipe or tubing and shall extend at least to the outside end of the compression fitting when installed. The stiffener shall be free of rough or sharp edges and shall not be a force fit in the plastic. A split tubular stiffener shall not be used.

3.6 PIPE SLEEVES

Pipes passing through concrete or masonry walls or concrete floors or roofs shall be provided with pipe sleeves fitted into place at the time of construction. Sleeves shall not be installed in structural members except where indicated or approved. All rectangular and square openings shall be as detailed. Each sleeve shall extend through its respective wall, floor or roof, and shall be cut flush with each surface, except in mechanical room floors not located on grade where clamping flanges or riser pipe clamps are used. Sleeves in mechanical room floors above grade shall extend at least 100 mm above finish floor. Unless otherwise indicated, sleeves shall be large enough to provide a minimum clearance of 6.4 mm all around the pipe. Sleeves in bearing walls, waterproofing membrane floors, and wet areas shall be steel pipe. Sleeves in nonbearing walls, floors, or ceilings may be steel pipe, galvanized sheet metal with lock-type longitudinal seam, or moisture-resistant fiber or plastic. For penetrations of fire walls, fire partitions and floors which are not on grade, the annular space between the pipe and sleeve shall be sealed with firestopping material and sealant that meet the requirement of Section 07840 FIRESTOPPING.

3.7 PIPES PENETRATING WATERPROOFING MEMBRANES

Pipes penetrating waterproofing membranes shall be installed as specified in Section 15400 PLUMBING, GENERAL PURPOSE.

3.8 FIRE SEAL

Penetrations of fire rated partitions, walls and floors shall be in accordance with Section 07840 FIRESTOPPING.

3.9 ESCUTCHEONS

Escutcheons shall be provided for all finished surfaces where gas piping passes through floors, walls, or ceilings except in boiler, utility, or equipment rooms.

3.10 SPECIAL REQUIREMENTS

Drips, grading of the lines, freeze protection, and branch outlet locations shall be as shown and shall conform to the requirements of NFPA 54/ANSI Z223.1.

3.11 BUILDING STRUCTURE

Building structure shall not be weakened by the installation of any gas piping. Beams or joists shall not be cut or notched.

3.12 PIPING SYSTEM SUPPORTS

Gas piping systems in buildings shall be supported with pipe hooks, metal pipe straps, bands or hangers suitable for the size of piping or tubing. Gas piping system shall not be supported by other piping. Spacing of supports in gas piping and tubing installations shall conform to the requirements of NFPA 54/ANSI Z223.1. The selection and application of supports in gas piping and tubing installations shall conform to the requirements of MSS SP-69. In the support of multiple pipe runs on a common base member, a clip or clamp shall be used where each pipe crosses the base support member. Spacing of the base support members shall not exceed the hanger and support spacing required for any of the individual pipes in the multiple pipe run. The clips or clamps shall be rigidly connected to the common base member. A clearance of 3.2 mm shall be provided between the pipe and clip or clamp for all piping which may be subjected to thermal expansion.

3.13 ELECTRICAL BONDING AND GROUNDING

A gas piping system within a building shall be electrically continuous and bonded to a grounding electrode as required by NFPA 70.

3.14 SHUTOFF VALVE

Main gas shutoff valve controlling the gas piping system shall be easily accessible for operation and shall be installed as indicated, protected from physical damage, and marked with a metal tag to clearly identify the piping system controlled.

3.15 CATHODIC PROTECTION

Cathodic protection shall be provided for underground ferrous gas piping as specified in Section 13110 CATHODIC PROTECTION SYSTEM SACRIFICIAL ANODE and Section 13112 CATHODIC PROTECTION SYSTEM IMPRESSED CURRENT.

3.16 TESTING

Before any section of a gas piping system is put into service, it shall be carefully tested to assure that it is gastight. Prior to testing, the system shall be blown out, cleaned and cleared of all foreign material. Each joint shall be tested by means of an approved gas detector, soap and water, or an equivalent nonflammable solution. Testing shall be completed before any work is covered, enclosed, or concealed. All testing of piping systems shall be done with due regard for the safety of employees and the public during the test. Bulkheads, anchorage and bracing suitably designed to resist test pressures shall be installed if necessary. Oxygen shall not be used as a testing medium.

3.16.1 Pressure Tests

Before appliances are connected, piping systems shall be filled with air or an inert gas and shall withstand a minimum pressure of 21 kPa gauge for a period of not less than 10 minutes as specified in NFPA 54/ANSI Z223.1 without showing any drop in pressure. Oxygen shall not be used. Pressure shall be measured with a mercury manometer, slope gauge, or an equivalent device so calibrated as to be read in increments of not greater than 1 kPa. The source of pressure shall be isolated before the pressure tests are made.

3.16.2 Pressure Tests for Liquified Petroleum Gas

Systems shall withstand the pressure test described above. When appliances are connected to the piping system, fuel gas shall be used for testing and appliances shall withstand a pressure of not less than 2.5 kPa nor more than 3.5 kPa for a period of not less than 10 minutes without showing any drop in pressure. Pressure shall be measured with a water manometer or an equivalent device calibrated to be read in increments of not greater than 20 Pa. The source of pressure shall be isolated before the pressure tests are made.

3.16.3 Test With Gas

Before turning gas under pressure into any piping, all openings from which gas can escape shall be closed. Immediately after turning on the gas, the piping system shall be checked for leakage by using a laboratory-certified gas meter, an appliance orifice, a manometer, or equivalent device. All testing shall conform to the requirements of NFPA 54/ANSI Z223.1. If leakage is recorded, the gas supply shall be shut off, the leak shall be repaired, and the tests repeated until all leaks have been stopped.

3.16.4 Purging

After testing is completed, and before connecting any appliances, all gas piping shall be fully purged. LPG piping tested using fuel gas with appliances connected does not require purging. Piping shall not be purged into the combustion chamber of an appliance. The open end of piping systems being purged shall not discharge into confined spaces or areas where there are ignition sources unless the safety precautions recommended in NFPA 54/ANSI Z223.1 are followed.

3.16.5 Labor, Materials and Equipment

All labor, materials and equipment necessary for conducting the testing and purging shall be furnished by the Contractor.

END OF SECTION

This page intentionally blank

SECTION 15400

PLUMBING, GENERAL PURPOSE

PART 1 GENERAL

1.1 REFERENCES

The publications listed below form a part of this specification to the extent referenced. The publications are referred to in the text by basic designation only.

AIR CONDITIONING AND REFRIGERATION INSTITUTE (ARI)

ARI 700	(1995) Specifications for Fluorocarbon and Other Refrigerants
ARI 1010	(1994) Self-Contained, Mechanically-Refrigerated Drinking-Water Coolers

AMERICAN NATIONAL STANDARDS INSTITUTE (ANSI)

ANSI Z21.10.1	(1993; Z21.10.1a; Z21.10.1b; Z21.10.1c) Gas Water Heaters Vol. I Storage Water Heaters with Input Ratings of 75,000 Btu Per Hour or Less
ANSI Z21.10.3	(1993; Z21.10.3a; Z21.10.3b) Gas Water Heaters Vol. III Storage, With Input Ratings Above 75,000 Btu Per Hour, Circulating and Instantaneous Water Heaters
ANSI Z21.22	(1986; Z21.22a) Relief Valves and Automatic Gas Shutoff Devices for Hot Water Supply Systems

AMERICAN SOCIETY FOR TESTING AND MATERIALS (ASTM)

ASTM A 47	(1990; R 1995) Ferritic Malleable Iron Castings
ASTM A 47M	(1990; R 1996) Ferritic Malleable Iron Castings
ASTM A 53	(1997) Pipe, Steel, Black and Hot-Dipped, Zinc-Coated, Welded and Seamless
ASTM A 74	(1996) Cast Iron Soil Pipe and Fittings
ASTM A 105/A 105M	(1996) Carbon Steel Forgings for Piping Applications
ASTM A 183	(1983; R 1990) Carbon Steel Track Bolts and Nuts

ASTM A 193/A 193M	(1997a) Alloy-Steel and Stainless Steel Bolting Materials for High-Temperature Service
ASTM A 515/A 515M	(1992) Pressure Vessel Plates, Carbon Steel, for Intermediate- and Higher-Temperature Service
ASTM A 516/A 516M	(1990; R 1996) Pressure Vessel Plates, Carbon Steel, for Moderate- and Lower-Temperature Service
ASTM A 518	(1992; R 1997) Corrosion-Resistant High-Silicon Iron Castings
ASTM A 518M	(1992; R 1997) Corrosion-Resistant High-Silicon Iron Castings (Metric)
ASTM A 536	(1984; R 1993) Ductile Iron Castings
ASTM A 733	(1993) Welded and Seamless Carbon Steel and Austenitic Stainless Steel Pipe Nipples
ASTM A 888	(1996) Hubless Cast Iron Soil Pipe and Fittings for Sanitary and Storm Drain, Waste, and Vent Piping Applications
ASTM B 32	(1996) Solder Metal
ASTM B 42	(1996) Seamless Copper Pipe, Standard Sizes
ASTM B 43	(1996) Seamless Red Brass Pipe, Standard Sizes
ASTM B 75	(1995a) Seamless Copper Tube
ASTM B 88	(1996) Seamless Copper Water Tube
ASTM B 88M	(1996) Seamless Copper Water Tube (Metric)
ASTM B 111	(1995) Copper and Copper-Alloy Seamless Condenser Tubes and Ferrule Stock
ASTM B 117	(1997) Operating Salt Spray (FOG) Apparatus
ASTM B 152	(1994) Copper Sheet, Strip, Plate, and Rolled Bar
ASTM B 152M	(1994) Copper Sheet, Strip, Plate, and Rolled Bar (Metric)
ASTM B 306	(1996) Copper Drainage Tube (DWV)
ASTM B 370	(1992) Copper Sheet and Strip for Building Construction
ASTM B 584	(1996) Copper Alloy Sand Castings for General Applications

ASTM B 641	(1993) Seamless and Welded Copper Distribution Tube (Type D)
ASTM B 813	(1993) Liquid and Paste Fluxes for Soldering Applications of Copper and Copper Alloy Tube
ASTM B 828	(1992) Making Capillary Joints by Soldering of Copper and Copper Alloy Tube and Fittings
ASTM C 564	(1995a) Rubber Gaskets for Cast Iron Soil Pipe and Fittings
ASTM C 920	(1995) Elastomeric Joint Sealants
ASTM C 1053	(1990; R 1995) Borosilicate Glass Pipe and Fittings for Drain, Waste, and Vent (DWV) Applications
ASTM D 638	(1996) Tensile Properties of Plastics
ASTM D 638M	(1996) Tensile Properties of Plastics (Metric)
ASTM D 1004	(1994a) Initial Tear Resistance of Plastic Film and Sheeting
ASTM D 1248	(1984; R 1989) Polyethylene Plastics Molding and Extrusion Materials
ASTM D 2000	(1996) Rubber Products in Automotive Applications
ASTM D 2235	(1996a) Solvent Cement for Acrylonitrile-Butadiene-Styrene (ABS) Plastic Pipe and Fittings
ASTM D 2485	(1991; R 1996) Evaluating Coatings for High Temperature Service
ASTM D 2564	(1996a) Solvent Cements for Poly(Vinyl Chloride) (PVC) Plastic Piping Systems
ASTM D 2657	(1996) Heat Fusing Joining Polyolefin Pipe and Fittings
ASTM D 2661	(1996) Acrylonitrile-Butadiene-Styrene (ABS) Schedule 40 Plastic Drain, Waste, and Vent Pipe and Fittings
ASTM D 2665	(1996) Poly(Vinyl Chloride) (PVC) Plastic Drain, Waste, and Vent Pipe and Fittings
ASTM D 2822	(1991; R 1997) Asphalt Roof Cement
ASTM D 2855	(1996) Making Solvent-Cemented Joints with Poly(Vinyl Chloride) (PVC) Pipe and Fittings

ASTM D 3122	(1995) Solvent Cements for Styrene-Rubber (SR) Plastic Pipe and Fittings
ASTM D 3138	(1995) Solvent Cements for Transition Joints Between Acrylonitrile-Butadiene-Styrene (ABS) and Poly(Vinyl Chloride) (PVC) Non-Pressure Piping Components
ASTM D 3139	(1996a) Joints for Plastic Pressure Pipes Using Flexible Elastomeric Seals
ASTM D 3212	(1996a) Joints for Drain and Sewer Plastic Pipes Using Flexible Elastomeric Seals
ASTM D 3308	(1991a) PTFE Resin Skived Tape
ASTM D 3311	(1994) Drain, Waste, and Vent (DWV) Plastic Fittings Patterns
ASTM D 4060	(1995) Abrasion Resistance of Organic Coatings by the Taber Abraser
ASTM D 4101	(1996a) Propylene Plastic Injection and Extrusion Materials
ASTM D 4551	(1996) Poly(Vinyl Chloride) (PVC) Plastic Flexible Concealed Water-Containment Membrane
ASTM E 1	(1995) ASTM Thermometers
ASTM E 96	(1995) Water Vapor Transmission of Materials
ASTM F 409	(1995) Thermoplastic Accessible and Replaceable Plastic Tube and Tubular Fittings
ASTM F 477	(1995) Elastomeric Seals (Gaskets) for Joining Plastic Pipe
ASTM F 493	(1993a) Solvent Cements for Chlorinated Poly(Vinyl Chloride) (CPVC) Plastic Pipe and Fittings
ASTM F 628	(1995) Acrylonitrile-Butadiene-Styrene (ABS) Schedule 40 Plastic Drain, Waste, and Vent Pipe with a Cellular Core
ASTM F 891	(1993a) Coextruded Poly(Vinyl Chloride) (PVC) Plastic Pipe with a Cellular Core
ASTM F 1290	(1993) Electrofusion Joining Polyolefin Pipe and Fittings
ASTM F 1760	(1996) Poly(Vinyl Chloride) (PVC) Non-Pressure Plastuc Pipe Having Reprocessed-Recycled Content.

AMERICAN SOCIETY OF HEATING, REFRIGERATING AND AIR-CONDITIONING ENGINEERS (ASHRAE)

ASHRAE 34	(1992; Addenda a-j) Number Designation and Safety Classification of Refrigerants
ASHRAE 90.1	(1989; 90.1b; 90.1c; 90.1d; 90.1e; 90.1g; 90.1i) Energy Efficient Design of New Buildings Except Low-Rise Residential Buildings

ASME INTERNATIONAL (ASME)

ASME A112.1.2	(1991) Air Gaps in Plumbing Systems
ASME A112.6.1M	(1997) Supports for Off-the-Floor Plumbing Fixtures for Public Use
ASME A112.14.1	(1975; R 1990) Backwater Valves
ASME A112.18.1M	(1996) Plumbing Fixture Fittings
ASME A112.19.1M	(1994) Enameled Cast Iron Plumbing Fixtures
ASME A112.19.2M	(1995; Errata) Vitreous China Plumbing Fixtures
ASME A112.19.3M	(1987; R 1996) Stainless Steel Plumbing Fixtures (Designed for Residential Use)
ASME A112.19.4M	(1994; Errata Nov 1996) Porcelain Enameled Formed Steel Plumbing Fixtures
ASME A112.21.1M	(1991) Floor Drains
ASME A112.21.2M	(1983) Roof Drains
ASME A112.36.2M	(1991) Cleanouts
ASME B1.20.1	(1983; R 1992) Pipe Threads, General Purpose (Inch)
ASME B16.3	(1992) Malleable Iron Threaded Fittings
ASME B16.4	(1992) Gray Iron Threaded Fittings
ASME B16.5	(1996) Pipe Flanges and Flanged Fittings NPS 1/2 thru NPS 24
ASME B16.12	(1991) Cast Iron Threaded Drainage Fittings

ASME B16.15	(1985; R 1994) Cast Bronze Threaded Fittings Classes 125 and 250
ASME B16.18	(1984; R 1994) Cast Copper Alloy Solder Joint Pressure Fittings
ASME B16.21	(1992) Nonmetallic Flat Gaskets for Pipe Flanges
ASME B16.22	(1995) Wrought Copper and Copper Alloy Solder Joint Pressure Fittings
ASME B16.23	(1992; Errata Jan 1994) Cast Copper Alloy Solder Joint Drainage Fittings - DWV
ASME B16.24	(1991; Errata) Cast Copper Alloy Pipe Flanges, Class 150, 300, 400, 600, 900, 1500, and 2500, and Flanged Fittings, Class 150 and 300
ASME B16.29	(1994) Wrought Copper and Wrought Copper Alloy Solder Joint Drainage Fittings - DWV
ASME B16.34	(1996) Valves - Flanged, Threaded, and Welding End
ASME B16.39	(1986; R 1994) Malleable Iron Threaded Pipe Unions Classes 150, 250, and 300
ASME B31.1	(1995; B31.1a; B31.1b; B31.1c) Power Piping
ASME B31.5	(1992; B31.5a) Refrigeration Piping
ASME B40.1	(1991) Gauges - Pressure Indicating Dial Type - Elastic Element
ASME BPV VIII Div 1	(1998) Boiler and Pressure Vessel Code; Section VIII, Pressure Vessels Division 1 - Basic Coverage
ASME BPV IX	(1998) Boiler and Pressure Vessel Code; Section IX, Welding and Brazing Qualifications
ASME CSD-1	(1995; CSD-1a; CSD-1b) Controls and Safety Devices for Automatically Fired Boilers

AMERICAN SOCIETY OF SANITARY ENGINEERING (ASSE)

ASSE ANSI/ASSE 1001	(1990) Pipe Applied Atmospheric Type Vacuum Breakers
ASSE 1002	(1986) Water Closet Flush Tank Ball Cocks

ASSE ANSI/ASSE 1003	(1995) Water Pressure Reducing Valves for Domestic Water Supply Systems
ASSE 1005	(1986) Water Heater Drain Valves - 3/4-Inch Iron Pipe Size
ASSE ANSI/ASSE 1006	(1989) Residential Use (Household) Dishwashers
ASSE ANSI/ASSE 1011	(1995) Hose Connection Vacuum Breakers
ASSE ANSI/ASSE 1012	(1995) Backflow Preventers with Intermediate Atmospheric Vent
ASSE 1013	(1993) Reduced Pressure Principle Backflow Preventers
ASSE 1018	(1986) Trap Seal Primer Valves Water Supply Fed
ASSE ANSI/ASSE 1037	(1986; Rev thru Mar 1990) Pressurized Flushing Devices (Flushometers) for Plumbing Fixtures

AMERICAN WATER WORKS ASSOCIATION (AWWA)

AWWA-01	(1995) Standard Methods for the Examination of Water and Wastewater
AWWA B300	(1992) Hypochlorites
AWWA B301	(1992) Liquid Chlorine
AWWA ANSI/AWWA C105/A21.5	(1993) Polyethylene Encasement for Ductile-Iron Pipe Systems
AWWA C203	(1991) Coal-Tar Protective Coatings and Linings for Steel Water Pipelines - Enamel and Tape - Hot-Applied
AWWA C606	(1987) Grooved and Shouldered Joints
AWWA ANSI/AWWA C700	(1995) Cold-Water Meters - Displacement Type, Bronze Main Case
AWWA D100	(1996) Welded Steel Tanks for Water Storage
AWWA M20	(1973) Manual: Water Chlorination Principles and Practices

AMERICAN WELDING SOCIETY (AWS)

AWS A5.8	(1992) Filler Metals for Brazing and Braze Welding
AWS B2.2	(1991) Brazing Procedure and Performance Qualification

CAST IRON SOIL PIPE INSTITUTE (CISPI)

CISPI 301	(1995) Hubless Cast Iron Soil Pipe and Fittings for Sanitary and Storm Drain, Waste, and Vent Piping Applications
CISPI 310	(1995) Coupling for Use in Connection with Hubless Cast Iron Soil Pipe and Fittings for Sanitary and Storm Drain, Waste, and Vent Piping Applications
CISPI HSN-85	(1985) Neoprene Rubber Gaskets for Hub and Spigot Cast Iron Soil Pipe and Fittings

CODE OF FEDERAL REGULATIONS (CFR)

10 CFR 430	Energy Conservation Program for Consumer Products
21 CFR 175	Indirect Food Additives: Adhesives and Components of Coatings

COMMERCIAL ITEM DESCRIPTIONS (CID)

CID A-A-240	(Rev A) Shower Head, Ball Joint
CID A-A-50012	(Basic) Garbage Disposal Machine, Commercial

COPPER DEVELOPMENT ASSOCIATION (CDA)

CDA-02	(1995) Copper Tube Handbook

COUNCIL OF AMERICAN BUILDING OFFICIALS (CABO)

CABO A117.1	(1992; Errata Jun 1993) Accessible and Usable Buildings and Facilities

FOUNDATION FOR CROSS-CONNECTION CONTROL AND HYDRAULIC RESEARCH (FCCHR)

FCCCHR-01	(1993) Manual of Cross-Connection Control

HYDRAULIC INSTITUTE (HI)

HI ANSI/HI 1.1-1.5	(1994) Centrifugal Pumps

INTERNATIONAL ASSOCIATION OF PLUMBING AND MECHANCIAL OFFICIALS

IAPMO ANSI/IAPMO Z124.1	(1995) Plastic Bathtub Units
IAPMO ANSI/IAPMO Z124.2	(1995) Plastic Shower Receptors and Shower Stalls

IAPMO ANSI/IAPMO Z124.3	(1995) Plastic Lavatories
IAPMO ANSI/IAPMO Z124.5	(1997) Plastic Toilet (Water Closets) Seats
IAPMO ANSI/IAPMO z124.9	(1993) Plastic Urinal Fixtures

MANUFACTURERS STANDARDIZATION SOCIETY OF THE VALVE AND FITTINGS INDUSTRY (MSS)

MSS SP-25	(1998) Standard Marking System for Valves, Fittings, Flanges and Unions
MSS SP-44	(1996) Steel PipeLine Flanges
MSS SP-58	(1993) Pipe Hangers and Supports - Materials, Design and Manufacture
MSS SP-67	(1995) Butterfly Valves
MSS SP-69	(1996) Pipe Hangers and Supports - Selection and Application
MSS SP-70	(1990) Cast Iron Gate Valves, Flanged and Threaded Ends
MSS SP-71	(1997) Cast Iron Swing Check Valves, Flanges and Threaded Ends
MSS SP-72	(1992) Ball Valves with Flanged or Butt-Welding Ends for General Service
MSS SP-73	(1991; R 1996) Brazing Joints for Copper and Copper Alloy Pressure Fittings
MSS SP-78	(1987; R 1992) Cast Iron Plug Valves, Flanged and Threaded Ends
MSS SP-80	(1997) Bronze Gate, Globe, Angle and Check Valves
MSS SP-83	(1995) Class 3000 Steel Pipe Unions Socket-Welding and Threaded
MSS SP-85	(1994) Cast Iron Globe & Angle Valves, Flanged and Threaded Ends
MSS SP-110	(1996) Ball Valves Threaded, Socket-Welding, Solder Joint, Grooved and Flared Ends

NATIONAL ASSOCIATION OF PLUMBING-HEATING-COOLING CONTRACTORS (NAPHCC)

NAPHCC-01	(1996) National Standard Plumbing Code

NATIONAL ELECTRICAL MANUFACTURERS ASSOCIATION (NEMA)

NEMA 250	(1991) Enclosures for Electrical Equipment (1000 Volts Maximum)

NATIONAL FIRE PROTECTION ASSOCIATION (NFPA)

NFPA 31	(1997) Installation of Oil Burning Equipment
NFPA NFPA 54/ANSI Z223.1	(1996; Errata) National Fuel Gas Code
NFPA 90A	(1996) Installation of Air Conditioning and Ventilating Systems

NSF INTERNATIONAL (NSF)

NSF 3	(1996) Commercial Spray-Type Dishwashing and Glasswashing Machines
NSF 5	(1992) Water Heaters, Hot Water Supply Boilers, and Heat Recovery Equipment
NSF ANSI/NSF 14	(1996) Plastics Piping Components and Related Materials

PLASTIC PIPE AND FITTINGS ASSOCIATION (PPFA)

PPFA-01	(1991) Plastic Pipe in Fire Resistive Construction

PLUMBING AND DRAINAGE INSTITUTE (PDI)

PDI G-101	(1996) Testing and Rating Procedure for Grease Interceptors with Appendix of Sizing and Installation Data
PDI WH 201	(1992) Water Hammer Arresters

SOCIETY OF AUTOMOTIVE ENGINEERS (SAE)

SAE J 1508	(1996) Hose Clamps

THE SOCIETY FOR PROTECTIVE COATING (SSPC)

SSPC SP 5	(1994) White Metal Blast Cleaning

UNDERWRITERS LABORATORIES (UL)

UL 174	(1996; Rev thru Nov 1997) Household Electric Storage Tank Water Heaters
UL 430	(1994; Rev thru Oct 1996) Waste Disposers
UL 732	(1995; Rev Oct 1997) Oil-Fired Storage Tank Water Heaters
UL 749	(1997) Household Dishwashers
UL 921	(1996) Commercial Electric Dishwashers

1.2 STANDARD PRODUCTS

Specified materials and equipment shall be standard products of a manufacturer regularly engaged in the manufacture of such products. Specified equipment shall essentially duplicate equipment that has performed satisfactorily at least two years prior to bid opening.

1.3 PERFORMANCE REQUIREMENTS

1.3.1 Welding

Piping shall be welded in accordance with qualified procedures using performance-qualified welders and welding operators. Procedures and welders shall be qualified in accordance with ASME BPV IX. Welding procedures qualified by others, and welders and welding operators qualified by another employer, may be accepted as permitted by ASME B31.1. The Contracting Officer shall be notified 24 hours in advance of tests, and the tests shall be performed at the work site if practicable. Welders or welding operators shall apply their assigned symbols near each weld they make as a permanent record. Structural members shall be welded in accordance with Section 05055 WELDING, STRUCTURAL.

1.3.2 Cathodic Protection and Pipe Joint Bonding

Cathodic protection and pipe joint bonding systems shall be in accordance with Section 13110 CATHODIC PROTECTION SYSTEM (SACRIFICIAL ANODE).

1.4 ELECTRICAL WORK

Motors, motor controllers and motor efficiencies shall conform to the requirements of Section 16415 ELECTRICAL WORK, INTERIOR. Electrical motor-driven equipment specified herein shall be provided complete with motors. Equipment shall be rated at 60 Hz, single phase, ac unless otherwise indicated. Where a motor controller is not provided in a motor-control center on the electrical drawings, a motor controller shall be as indicated. Motor controllers shall be provided complete with properly sized thermal-overload protection in each ungrounded conductor, auxiliary contact, and other equipment, at the specified capacity, and including an allowable service factor.

1.5 SUBMITTALS

Government approval is required for submittals with a "GA" designation; submittals having an "FIO" designation are for information only. The following shall be submitted in accordance with Section 01330 SUBMITTAL PROCEDURES:

SD-01 Data

Welding;FIO.

A copy of qualified procedures and a list of names and identification symbols of qualified welders and welding operators.

Vibration-Absorbing Features;FIO.

Details of vibration-absorbing features, including arrangement, foundation plan, dimensions and specifications.

SD-04 Drawings

Plumbing System; GA.

Detail drawings consisting of illustrations, schedules, performance charts, instructions, brochures, diagrams, and other information to illustrate the requirements and operations of each system. Detail drawings for the complete plumbing system including piping layouts and locations of connections; dimensions for roughing-in, foundation, and support points; schematic diagrams and wiring diagrams or connection and interconnection diagrams. Detail drawings shall indicate clearances required for maintenance and operation. Where piping and equipment are to be supported other than as indicated, details shall include loadings and proposed support methods. Mechanical drawing plans, elevations, views, and details, shall be drawn to scale.

Electrical Schematics; FIO.

Complete electrical schematic lineless or full line interconnection and connection diagram for each piece of mechanical equipment having more than one automatic or manual electrical control device.

SD-06 Instructions

Plumbing System; FIO.

Diagrams, instructions, and other sheets proposed for posting. Manufacturer's recommendations for the installation of bell and spigot and hubless joints for cast iron soil pipe.

SD-09 Reports

Tests, Flushing and Disinfection; FIO.

Test reports in booklet form showing all field tests performed to adjust each component and all field tests performed to prove compliance with the specified performance criteria, completion and testing of the installed system. Each test report shall indicate the final position of controls.

Backflow Prevention Assembly Tests; FIO.

Certification of proper operation shall be as accomplished in accordance with state regulations by an individual certified by the state to perform such tests. If no state requirement exists, the Contractor shall have the manufacturer's representative test the device, to ensure the unit is properly installed and performing as intended. The Contractor shall provide written documentation of the tests performed and signed by the individual performing the tests.

SD-13 Certificates

Materials and Equipment; FIO.

Where materials or equipment are specified to comply with requirements of AGA, or ASME, proof of such compliance. The label or listing of the specified agency will be acceptable evidence. In lieu of the label or listing, a written certificate may be submitted from an approved, nationally recognized testing organization equipped to perform such services, stating that the items have been tested and conform to the requirements and testing methods of the specified agency. Where equipment is specified to conform to requirements of the ASME Boiler and Pressure Vessel Code, the design, fabrication, and installation shall conform to the code.

Bolts; FIO.

Written certification by the bolt manufacturer that the bolts furnished comply with the specified requirements. The certification shall include illustrations of product-required markings, the date of manufacture, and the number of each type of bolt to be furnished based on this certification.

SD-19 Operation and Maintenance Manuals

Plumbing System; GA.

Six copies of the operation manual outlining the step-by-step procedures required for system startup, operation and shutdown. The manual shall include the manufacturer's name, model number, service manual, parts list, and brief description of all equipment and their basic operating features. Six copies of the maintenance manual listing routine maintenance procedures, possible breakdowns and repairs. The manual shall include piping and equipment layout and simplified wiring and control diagrams of the system as installed.

1.6 REGULATORY REQUIREMENTS

1.6.1 Plumbing

Plumbing work shall be in accordance with NAPHCC-01.

1.7 PROJECT/SITE CONDITIONS

The Contractor shall become familiar with details of the work, verify dimensions in the field, and advise the Contracting Officer of any discrepancy before performing any work.

PART 2 PRODUCTS

2.1 MATERIALS

Materials for various services shall be in accordance with TABLES I and II. Pipe schedules shall be selected based on service requirements. Pipe fittings shall be compatible with the applicable pipe materials. Plastic pipe, fittings, and solvent cement shall meet NSF ANSI/NSF 14 and shall be NSF listed for the service intended. Plastic pipe, fittings, and solvent cement used for potable hot and cold water service shall bear the NSF seal "NSF-PW." Polypropylene pipe and fittings shall conform to dimensional requirements of Schedule 40, Iron Pipe size. Pipe threads (except dry seal) shall conform to ASME B1.20.1. Grooved pipe couplings and fittings shall be from the same manufacturer. Material or equipment containing lead shall not be used in any potable water system. Hubless cast-iron soil pipe shall not be installed underground, under concrete floor slabs, or in crawl spaces below kitchen floors. Plastic pipe shall not be installed in air plenums. Plastic pipe shall not be installed in a pressure piping system in buildings greater than three stories including any basement levels.

2.1.1 Pipe Joint Materials

Grooved pipe shall not be used under ground. Joints and gasket materials shall conform to the following:

a. Coupling for Cast-Iron Pipe: for hub and spigot type ASTM A 74, AWWA C606. For hubless type: CISPI 310

b. Coupling for Steel Pipe: AWWA C606.

c. Couplings for Grooved Pipe: Ductile Iron ASTM A 536 (Grade 65-45-12), Malleable Iron ASTM A 47, Grade 32510, Copper ASTM A 536.

d. Flange Gaskets: Gaskets shall be made of non-asbestos material in accordance with ASME B16.21. Gaskets shall be flat, 1.6 mm thick, and contain Aramid fibers bonded with Styrene Butadiene Rubber (SBR) or Nitro Butadiene Rubber (NBR). Gaskets shall be the full face or self centering flat ring type. Gaskets used for hydrocarbon service shall be bonded with NBR.

e. Neoprene Gaskets for Hub and Cast-Iron Pipe and Fittings: CISPI HSN-85.

f. Brazing Material: Brazing material shall conform to AWS A5.8, BCuP-5.

g. Brazing Flux: Flux shall be in paste or liquid form appropriate for use with brazing material. Flux shall be as follows: lead-free; have a 100 percent flushable residue; contain slightly acidic reagents; contain potassium borides; and contain fluorides. Silver brazing materials shall be in accordance with AWS A5.8.

h. Solder Material: Solder metal shall conform to ASTM B 32 95-5 tin-antimony.

i. Solder Flux: Flux shall be liquid form, non-corrosive, and conform to ASTM B 813, Standard Test 1.

j. PTFE Tape: PTFE Tape, for use with Threaded Metal or Plastic Pipe, ASTM D 3308.

k. Rubber Gaskets for Cast-Iron Soil-Pipe and Fittings: ASTM C 564.

l. Rubber Gaskets for Grooved Pipe: ASTM D 2000, maximum temperature 110 degrees C.

m. Flexible Elastomeric Seals: ASTM D 3139, ASTM D 3212 or ASTM F 477.

n. Bolts and Nuts for Grooved Pipe Couplings: Heat-treated carbon steel, ASTM A 183.

o. Solvent Cement for Transition Joints between ABS and PVC Nonpressure Piping Components: ASTM D 3138.

p. Plastic Solvent Cement for ABS Plastic Pipe: ASTM D 2235.

q. Plastic Solvent Cement for PVC Plastic Pipe: ASTM D 2564 and ASTM D 2855.

r. Plastic Solvent Cement for CPVC Plastic Pipe: ASTM F 493.

s. Flanged fittings including flanges, bolts, nuts, bolt patterns, etc., shall be in accordance with ASME B16.5 class 150 and shall have the manufacturer's trademark affixed in accordance with MSS SP-25. Flange material shall conform to ASTM A 105/A 105M. Blind flange material shall conform to ASTM A 516/A 516M cold service and ASTM A 515/A 515M for hot service. Bolts shall be high strength or intermediate strength with material conforming to ASTM A 193/A 193M.

t. Plastic Solvent Cement for Styrene Rubber Plastic Pipe: ASTM D 3122.

2.1.2 Miscellaneous Materials

Miscellaneous materials shall conform to the following:

a. Water Hammer Arrester: PDI WH 201.

b. Copper, Sheet and Strip for Building Construction: ASTM B 370.

c. Asphalt Roof Cement: ASTM D 2822.

d. Hose Clamps: SAE J 1508.

e. Supports for Off-The-Floor Plumbing Fixtures: ASME A112.6.1M.

f. Metallic Cleanouts: ASME A112.36.2M.

g. Plumbing Fixture Setting Compound: A preformed flexible ring seal molded from hydrocarbon wax material. The seal material shall be nonvolatile nonasphaltic and contain germicide and provide watertight, gastight, odorproof and verminproof properties.

h. Coal-Tar Protective Coatings and Linings for Steel Water Pipelines:

AWWA C203.

i. Hypochlorites: AWWA B300.

j. Liquid Chlorine: AWWA B301.

k. Polyethylene Encasement for Ductile-Iron Piping: AWWA ANSI/AWWA C105/A21.5.

l. Gauges - Pressure and Vacuum Indicating Dial Type - Elastic Element: ASME B40.1.

m. Thermometers: ASTM E 1.

2.1.3 Pipe Insulation Material

Insulation shall be as specified in Section 15080 THERMAL INSULATION FOR MECHANICAL SYSTEMS.

2.2 PIPE HANGERS, INSERTS, AND SUPPORTS

Pipe hangers, inserts, and supports shall conform to MSS SP-58 and MSS SP-69.

2.3 VALVES

Valves shall be provided on supplies to equipment and fixtures. Valves 64 mm inches and smaller shall be bronze with threaded bodies for pipe and solder-type connections for tubing. Valves 72 mm and larger shall have flanged iron bodies and bronze trim. Pressure ratings shall be based upon the application. Grooved end valves may be provided if the manufacturer certifies that the valves meet the performance requirements of applicable MSS standard. Valves shall conform to the following standards:

Description	Standard
Butterfly Valves	MSS SP-67
Cast-Iron Gate Valves, Flanged and Threaded Ends	MSS SP-70

Description	Standard
Cast-Iron Swing Check Valves, Flanged and Threaded Ends	MSS SP-71
Ball Valves with Flanged Butt-Welding Ends for General Service	MSS SP-72
Ball Valves Threaded, Socket-Welding, Solder Joint, Grooved and Flared Ends	MSS SP-110
Cast-Iron Plug Valves, Flanged and Threaded Ends	MSS SP-78
Bronze Gate, Globe, Angle, and Check Valves	MSS SP-80
Steel Valves, Socket Welding and Threaded Ends	ASME B16.34
Cast-Iron Globe and Angle Valves, Flanged and Threaded Ends	MSS SP-85
Backwater Valves	ASME A112.14.1
Vacuum Relief Valves	ASSE ANSI/ASSE 1001
Water Pressure Reducing Valves	ASSE ANSI/ASSE 1003
Water Heater Drain Valves	ASSE 1005
Trap Seal Primer Valves	ASSE 1018
Temperature and Pressure Relief Valves for Hot Water Supply Systems	ANSI Z21.22
Temperature and Pressure Relief Valves for Automatically Fired Hot Water Boilers Safety Code No., Part CW, Article 5	ASME CSD-1

2.3.1 Backwater Valves

Backwater valves shall be either separate from the floor drain or a combination floor drain, P-trap, and backwater valve, as shown. Valves shall have cast-iron bodies with cleanouts large enough to permit removal of interior parts. Valves shall be of the flap type, hinged or pivoted, with revolving disks. Hinge pivots, disks, and seats shall be nonferrous metal. Disks shall be slightly open in a no-flow no-backwater condition. Cleanouts shall extend to finished floor and be fitted with threaded countersunk plugs.

2.3.2 Wall Faucets

Wall faucets with vacuum-breaker backflow preventer shall be brass with 19 mm male inlet threads, hexagon shoulder, and 19 mm hose connection. Faucet handle shall be securely attached to stem.

2.3.3 Wall Hydrants

Wall hydrants with vacuum-breaker backflow preventer shall have a nickle-brass or nickel-bronze wall plate or flange with nozzle and detachable key handle. A brass or bronze operating rod shall be provided within a galvanized iron casing of sufficient length to extend through the wall so that the valve is inside the building, and the portion of the hydrant between the outlet and valve is self-draining. A brass or bronze valve with coupling and union elbow having metal-to-metal seat shall be provided. Valve rod and seat washer shall be removable through the face of the hydrant. The hydrant shall have 19 mm exposed hose thread on spout and 19 mm male pipe thread on inlet.

2.3.4 Lawn Faucets

Lawn faucets shall be brass, with either straight or angle bodies, and shall be of the compression type. Body flange shall be provided with internal pipe thread to suit 19 mm pipe. Body shall be suitable for wrench grip. Faucet spout shall have 19 mm exposed hose threads. Faucet handle shall be securely attached to stem.

2.3.6 Relief Valves

Water heaters and hot water storage tanks shall have a combination pressure and temperature (P&T) relief valve. The pressure relief element of a P&T relief valve shall have adequate capacity to prevent excessive pressure buildup in the system when the system is operating at the maximum rate of heat input. The temperature element of a P&T relief valve shall have a relieving capacity which is at least equal to the total input of the heaters when operating at their maximum capacity. Relief valves shall be rated according to ANSI Z21.22. Relief valves for systems where the maximum rate of heat input is less than 58600 W shall have 19 mm minimum inlets, and 19 mm outlets. Relief valves for systems where the maximum rate of heat input is greater than 58600 W shall have 25 mm minimum inlets, and 25 mm outlets. The discharge pipe from the relief valve shall be the size of the valve outlet.

2.4 FIXTURES

Fixtures shall be water conservation type, in accordance with NAPHCC-01. Fixtures for use by the physically handicapped shall be in accordance with CABO A117.1. Vitreous china, nonabsorbent, hard-burned, and vitrified throughout the body shall be provided. Porcelain enameled ware shall have specially selected, clear white, acid-resisting enamel coating evenly applied on surfaces. No fixture will be accepted that shows cracks, crazes, blisters, thin spots, or other flaws. Fixtures shall be equipped with appurtenances such as traps, faucets, stop valves, and drain fittings. Each fixture and piece of equipment requiring connections to the drainage system, except grease interceptors, shall be equipped with a trap. Brass expansion or toggle bolts capped with acorn nuts shall be provided for supports, and polished chromium-plated pipe, valves, and fittings shall be provided where exposed to view. Fixtures with the supply discharge below the rim shall be equipped with backflow preventers. Internal parts of flush and/or flushometer valves, shower mixing valves, shower head face plates, pop-up stoppers of lavatory waste drains, and pop-up stoppers and overflow tees and shoes of bathtub waste drains may contain acetal resin, fluorocarbon, nylon, acrylonitrile-butadiene-styrene (ABS) or other plastic material, if the material has provided satisfactory service under actual commercial or industrial operating conditions for not less than 2 years. Plastic in contact with hot water shall be suitable for 82 degrees C water temperature. Plumbing fixtures shall be as indicated in paragraph PLUMBING FIXTURE SCHEDULE.

2.4.1 Lavatories

Enameled cast-iron lavatories shall be provided with two cast-iron or steel brackets secured to the underside of the apron and drilled for bolting to the wall in a manner similar to the hanger plate. Exposed brackets shall be porcelain enameled.

2.5 BACKFLOW PREVENTERS

Backflow preventers shall be approved and listed by the Foundation For Cross-Connection Control & Hydraulic Research. Reduced pressure principle assemblies, double check valve assemblies, atmospheric (nonpressure) type vacuum breakers, and pressure type vacuum breakers shall be tested, approved, and listed in accordance with FCCCHR-01. Backflow preventers with intermediate atmospheric vent shall conform to ASSE ANSI/ASSE 1012. Reduced pressure principle backflow preventers shall conform to ASSE 1013. Hose connection vacuum breakers shall conform to ASSE ANSI/ASSE 1011. Pipe applied atmospheric type vacuum breakers shall conform to ASSE ANSI/ASSE 1001. Air gaps in plumbing systems shall conform to ASME A112.1.2.

2.6 DRAINS

2.6.1 Floor and Shower Drains

Floor and shower drains shall consist of a galvanized body, integral seepage pan, and adjustable perforated or slotted chromium-plated bronze, nickel-bronze, or nickel-brass strainer, consisting of grate and threaded collar. Floor drains shall be cast iron except where metallic waterproofing membrane is installed. Drains shall be of double drainage pattern for embedding in the floor construction. The seepage pan shall have weep holes or channels for drainage to the drainpipe. The strainer shall be adjustable to floor thickness. A clamping device for attaching flashing or waterproofing membrane to the seepage pan without damaging the flashing or waterproofing membrane shall be provided when required. Drains shall be provided with threaded or caulked connection. In lieu of a caulked joint between the drain outlet and waste pipe, a neoprene rubber gasket conforming to ASTM C 564 may be installed, provided that the drain is specifically designed for the rubber gasket compression type joint. Floor and shower drains shall conform to ASME A112.21.1M.

2.6.1.2 Drains Valves

Drains valves installed in connection with waterproofed floors shall be equipped with bolted-type device to securely clamp flashing.

2.6.2 Area Drains

Area drains shall be plain pattern with polished stainless steel perforated or slotted grate and bottom outlet. The drain shall be circular or square with a 305 mm nominal overall width or diameter and 254 mm inch nominal overall depth. Drains shall be cast iron with manufacturer's standard coating. Grate shall be easily lifted out for cleaning. Outlet shall be suitable for inside caulked connection to drain pipe. Drains shall conform to ASME A112.21.1M.

2.6.5 Pit Drains

Pit drains shall consist of a body, integral seepage pan, and nontilting perforated or slotted grate. Drains shall be of double drainage pattern suitable for embedding in the floor construction. The seepage pan shall have weep holes or channels for drainage to the drain pipe. Membrane or flashing clamping device shall be provided when required. Drains shall be cast iron with manufacturer's standard coating. Drains shall be circular and provided with bottom outlet suitable for inside caulked connection, unless otherwise indicated. Drains shall be provided with separate cast-iron "P" traps, unless otherwise indicated.

2.6.7 Roof Drains and Expansion Joints

Roof drains shall conform to ASME A112.21.2M, with dome and integral flange, and shall have a device for making a watertight connection between roofing and flashing. The whole assembly shall be galvanized heavy pattern cast iron. For aggregate surface roofing, the drain shall be provided with a gravel stop. On roofs other than concrete construction, roof drains shall be complete with underdeck clamp, sump receiver, and an extension for the insulation thickness where applicable. A clamping device for attaching flashing or waterproofing membrane to the seepage pan without damaging the flashing or membrane shall be provided when required to suit the building construction. Strainer openings shall have a combined area equal to twice that of the drain outlet. The outlet shall be equipped to make a proper connection to threaded pipe of the same size as the downspout. An expansion joint of proper size to receive the conductor pipe shall be provided. The expansion joint shall consist of a heavy cast-iron housing, brass or bronze sleeve, brass or bronze fastening bolts and nuts, and gaskets or packing. The sleeve shall have a nominal thickness of not less than 0.134 inch. Gaskets and packing shall be close-cell neoprene, O-ring packing shall be close-cell neoprene of 70 durometer. Packing shall be held in place by a packing gland secured with bolts.

2.8 TRAPS

Unless otherwise specified, traps shall be plastic per ASTM F 409 or copper-alloy adjustable tube type with slip joint inlet and swivel. Traps shall be without a cleanout. Tubes shall be copper alloy with walls not less than 0.8 mm thick within commercial tolerances, except on the outside of bends where the thickness may be reduced slightly in manufacture by usual commercial methods. Inlets shall have rubber washer and copper alloy nuts for slip joints above the discharge level. Swivel joints shall be below the discharge level and shall be of metal-to-metal or metal-to-plastic type as required for the application. Nuts shall have flats for wrench grip. Outlets shall have internal pipe thread, except that when required for the application, the outlets shall have sockets for solder-joint connections. The depth of the water seal shall be not less than 52 mm. The interior diameter shall be not more than 3.2 mm over or under the nominal size, and interior surfaces shall be reasonably smooth throughout. A copper alloy "P" trap assembly consisting of an adjustable "P" trap and threaded trap wall nipple with cast brass wall flange shall be provided for lavatories. The assembly shall be a standard manufactured unit and may have a rubber-gasketed swivel joint.

2.9 Not Used

2.10 WATER HEATERS

Water heater type and capacity shall be as indicated. Primary water heater shall have controls with an adjustable range that includes 32 to 60 degrees C. Hot water systems utilizing recirculation systems shall be tied into building off-hour controls. Plastic materials polyetherimide (PEI) and polyethersulfone (PES) are forbidden to be used for vent piping of combustion gases.

2.10.1 Instantaneous Type

Instantaneous direct fired hot water supply boiler for use without a storage tank; gas controls shall be modulating. Finned coppertube boiler shall feature minimum 82% thermal efficiency. Heaters shall be complete with a control system, temperature gauge, and pressure gauge and shall have ASME rated combination pressure and temperature relief valve.

2.10.1.2 Gas-Fired Type

Gas-fired water heaters shall conform to ANSI Z21.10.1 when input is 75,000 But per hour or less or ANSI Z21.10.3 for heaters with input greater than 75,000 But per hour.

2.12 PUMPS

2.12.1 Circulating Pumps

Domestic hot water circulating pumps shall be electrically driven, single-stage, centrifugal, with mechanical seals, suitable for the intended service. Pump capacities, efficiencies, motor sizes, speeds, and impeller types shall be as shown. Pump and motor shall be supported by the piping on which it is installed. The shaft shall be one-piece, heat-treated, corrosion-resisting steel with impeller and smooth-surfaced housing of bronze. Motor shall be totally enclosed, fan-cooled and shall have sufficient horsepower for the service required. Pump shall conform to HI ANSI/HI 1.1-1.5. Each pump motor shall be equipped with an across-the-line magnetic controller in a NEMA 250, Type 1 enclosure with "START-STOP" switch in cover. Pump motors smaller than Fractional horsepower pump motors shall have integral thermal overload protection in accordance with Section 16415 ELECTRICAL WORK, INTERIOR. Guards shall shield exposed moving parts.

2.12.3.2 Controls

Each pump motor shall be provided with enclosed across-the-line-type magnetic controller complete in a NEMA 250 Type 1 enclosure with three position, "HAND-OFF-AUTOMATIC," selector switch in cover. Pumps shall be automatically started and stopped by float or pressure switches, as indicated. The pumps shall start and stop at the levels and pressures indicated. A multiposition sequence selector switch shall be provided so that any two pumps may be operated simultaneously beeping a third pump as a standby.

2.12.4 Flexible Connectors

Flexible connectors shall be provided at the suction and discharge of each pump that is 1 hp or larger. Connectors shall be constructed of neoprene, rubber, or braided bronze, with Class 150 standard flanges. Flexible connectors shall be line size and suitable for the pressure and temperature of the intended service.

2.15 DOMESTIC WATER SERVICE METER

Cold water meter shall be of the positive displacement type conforming to AWWA ANSI/AWWA C700. Meter register may be round or straight reading type. Meter shall be provided with a pulse generator, remote readout register and all necessary wiring and accessories.

PART 3 EXECUTION

3.1 GENERAL INSTALLATION REQUIREMENTS

Piping located in air plenums shall conform to NFPA 90A requirements. Plastic pipe shall not be installed in air plenums. Piping located in shafts that constitute air ducts or that enclose air ducts shall be noncombustible in accordance with NFPA 90A. Installation of plastic pipe where in compliance with NFPA may be installed in accordance with PPFA-01. The plumbing system shall be installed complete with necessary fixtures, fittings, traps, valves, and accessories. Water and drainage piping shall be extended 1.5 m outside the building, unless otherwise indicated. A gate valve and drain shall be installed on the water service line inside the building approximately 152 mm above the floor from point of entry. Piping shall be connected to the exterior service lines or capped or plugged if the exterior service is not in place. Sewer and water pipes shall be laid in separate trenches, except when otherwise shown. Exterior underground utilities shall be at least 305 mm below the average local frost depth or as indicated on the drawings. If trenches are closed or the pipes are otherwise covered before being connected to the service lines, the location of the end of each plumbing utility shall be marked with a stake or other acceptable means. Valves shall be installed with control no lower than the valve body.

3.1.1 Water Pipe, Fittings, and Connections

3.1.1.1 Utilities

The piping shall be extended to fixtures, outlets, and equipment. The hot-water and cold-water piping system shall be arranged and installed to permit draining. The supply line to each item of equipment or fixture, except faucets, flush valves, or other control valves which are supplied with integral stops, shall be equipped with a shutoff valve to enable isolation of the item for repair and maintenance without interfering with operation of other equipment or fixtures. Supply piping to fixtures, faucets, hydrants, shower heads, and flushing devices shall be anchored to prevent movement.

3.1.1.2 Cutting and Repairing

The work shall be carefully laid out in advance, and unnecessary cutting of construction shall be avoided. Damage to building, piping, wiring, or equipment as a result of cutting shall be repaired by mechanics skilled in the trade involved.

3.1.1.3 Protection of Fixtures, Materials, and Equipment

Pipe openings shall be closed with caps or plugs during installation. Fixtures and equipment shall be tightly covered and protected against dirt, water, chemicals, and mechanical injury. Upon completion of the work, the fixtures, materials, and equipment shall be thoroughly cleaned, adjusted, and operated. Safety guards shall be provided for exposed rotating equipment.

3.1.1.4 Mains, Branches, and Runouts

Piping shall be installed as indicated. Pipe shall be accurately cut and worked into place without springing or forcing. Structural portions of the building shall not be weakened. Aboveground piping shall run parallel with the lines of the building, unless otherwise indicated. Branch pipes from service lines may be taken from top, bottom, or side of main, using crossover fittings required by structural or

installation conditions. Supply pipes, valves, and fittings shall be kept a sufficient distance from other work and other services to permit not less than 12.7 mm between finished covering on the different services. Bare and insulated water lines shall not bear directly against building structural elements so as to transmit sound to the structure or to prevent flexible movement of the lines. Water pipe shall not be buried in or under floors unless specifically indicated or approved. Changes in pipe sizes shall be made with reducing fittings. Use of bushings will not be permitted except for use in situations in which standard factory fabricated components are furnished to accommodate specific excepted installation practice. Change in direction shall be made with fittings, except that bending of pipe 102 mm and smaller will be permitted, provided a pipe bender is used and wide sweep bends are formed. The center-line radius of bends shall be not less than six diameters of the pipe. Bent pipe showing kinks, wrinkles, flattening, or other malformations will not be acceptable.

3.1.1.5 Pipe Drains

Pipe drains indicated shall consist of 19 mm hose bibb with renewable seat and gate valve ahead of hose bibb. At other low points, 19 mm brass plugs or caps shall be provided. Disconnection of the supply piping at the fixture is an acceptable drain.

3.1.1.6 Expansion and Contraction of Piping

Allowance shall be made throughout for expansion and contraction of water pipe. Each hot-water and hot-water circulation riser shall have expansion loops or other provisions such as offsets, changes in direction, etc., where indicated and/or required. Risers shall be securely anchored as required or where indicated to force expansion to loops. Branch connections from risers shall be made with ample swing or offset to avoid undue strain on fittings or short pipe lengths. Horizontal runs of pipe over 15 m in length shall be anchored to the wall or the supporting construction about midway on the run to force expansion, evenly divided, toward the ends. Sufficient flexibility shall be provided on branch runouts from mains and risers to provide for expansion and contraction of piping. Flexibility shall be provided by installing one or more turns in the line so that piping will spring enough to allow for expansion without straining. If mechanical grooved pipe coupling systems are provided, the deviation from design requirements for expansion and contraction may be allowed pending approval of Contracting Officer.

3.1.1.7 Commercial-Type Water Hammer Arresters

Commercial-type water hammer arresters shall be provided on hot- and cold-water supplies and shall be located as generally indicated, with precise location and sizing to be in accordance with PDI WH 201. Water hammer arresters, where concealed, shall be accessible by means of access doors or removable panels. Commercial-type water hammer arresters shall conform to PDI WH 201. Vertical capped pipe columns will not be permitted.

3.1.2 Compressed Air Piping (Non-Oil Free)

Compressed air piping shall be installed as specified for water piping and suitable for 861 kPa working pressure. Compressed air piping shall have supply lines and discharge terminals legibly and permanently marked at both ends with the name of the system and the direction of flow.

3.1.3 Joints

Installation of pipe and fittings shall be made in accordance with the manufacturer's recommendations. Mitering of joints for elbows and notching of straight runs of pipe for tees will not be permitted. Joints shall be made up with fittings of compatible material and made for the specific purpose intended.

3.1.3.1 Threaded

Threaded joints shall have American Standard taper pipe threads conforming to ASME B1.20.1. Only male pipe threads shall be coated with graphite or with an approved graphite compound, or with an inert filler and oil, or shall have a polytetrafluoroethylene tape applied.

3.1.3.2 Mechanical Couplings

Grooved mechanical joints shall be prepared according to the coupling manufacturer's instructions. Pipe and groove dimensions shall comply with the tolerances specified by the coupling manufacturer. The diameter of grooves made in the field shall be measured using a "go/no-go" gauge, vernier or dial caliper, or narrow-land micrometer. Groove width and dimension of groove from end of the pipe shall be measured and recorded for each change in grooving tool setup to verify compliance with coupling manufacturer's tolerances. Grooved joints shall not be used in concealed locations.

3.1.3.3 Union and Flanged

Unions, flanges and mechanical couplings shall not be concealed in walls, ceilings, or partitions. Unions shall be used on pipe sizes 63.5 mm and smaller; flanges shall be used on pipe sizes 72 mm and larger.

3.1.3.4 Cast Iron Soil, Waste and Vent Pipe

Bell and spigot compression and hubless gasketed clamp joints for soil, waste and vent piping shall be installed per the manufacturer's recommendations.

3.1.3.5 Copper Tube and Pipe

The tube or fittings shall not be annealed when making connections. Connections shall be made with a multiflame torch.

a. Brazed. Brazed joints shall be made in conformance with AWS B2.2, MSS SP-73, and CDA-02 with flux and are acceptable for line sizes. Copper to copper joints shall include the use of copper-phosphorus or copper-phosphorus-silver brazing metal without flux. Brazing of dissimilar metals (copper to bronze or brass) shall include the use of flux with either a copper-phosphorus, copper-phosphorus-silver or a silver brazing filler metal.

b. Soldered. Soldered joints shall be made with flux and are only acceptable for lines 52 mm and smaller. Soldered joints shall conform to ASME B31.5 and CDA-02.

c. Copper Tube Extracted Joint. An extracted mechanical joint may be made in copper tube. Joint shall be produced with an appropriate tool by drilling a pilot hole and drawing out the tube surface to form a collar having a minimum height of three times the thickness of the tube wall. To prevent the branch tube from being inserted beyond the depth of the extracted joint,

dimpled depth stops shall be provided. Branch tube shall be notched for proper penetration into fitting to ensure a free flow joint. Extracted joints shall be brazed in accordance with NAPHCC-01 using B-Cup series filler metal in accordance with MSS SP-73. Soldered extracted joints will not be permitted.

3.1.3.6 Plastic Pipe

Acrylonitrile-Butadiene-Styrene (ABS) pipe shall have joints made with solvent cement. PVC and CPVC pipe shall have joints made with solvent cement elastomeric, threading, (threading of Schedule 80 Pipe is allowed only where required for disconnection and inspection; threading of Schedule 40 Pipe is not allowed), or mated flanged.

3.1.3.7 Glass Pipe

Joints for corrosive waste glass pipe and fittings shall be made with corrosion-resisting steel compression-type couplings with acrylonitrile rubber gaskets lined with polytetrafluoroethylene.

3.1.3.8 Corrosive Waste Plastic Pipe

Joints for polyolefin pipe and fittings shall be made by mechanical joint or electrical fusion coil method in accordance with ASTM D 2657 and ASTM F 1290. Joints for filament-wound reinforced thermosetting resin pipe shall be made in accordance with manufacturer's instructions. Unions or flanges shall be used where required for disconnection and inspection.

3.1.3.9 Other Joint Methods

3.1.4 Dissimilar Pipe Materials

Connections between ferrous and non-ferrous copper pipe shall be made with dielectric unions or flange waterways. Connecting joints between plastic and metallic pipe shall be made with transition fitting for the specific purpose.

3.1.5 Corrosion Protection for Buried Pipe and Fittings

3.1.5.1 Cast Iron and Ductile Iron

Pressure pipe shall have protective coating, a cathodic protection system, and joint bonding. Pipe, fittings, and joints shall have a protective coating. The protective coating shall be completely encasing polyethylene tube or sheet in accordance with AWWA ANSI/AWWA C105/A21.5. Joints and fittings shall be cleaned, coated with primer, and wrapped with tape. The pipe shall be cleaned, coated, and wrapped prior to pipe tightness testing. Joints and fittings shall be cleaned, coated, and wrapped after pipe tightness testing. Tape shall conform to AWWA C203 and shall be applied with a 50 percent overlap. Primer shall be as recommended by the tape manufacturer.

3.1.5.2 Steel

Steel pipe, joints, and fittings shall be cleaned, coated with primer, and wrapped with tape. Pipe shall be cleaned, coated, and wrapped prior to pipe tightness testing. Joints and fittings shall be cleaned, coated,

and wrapped after pipe tightness testing. Tape shall conform to AWWA C203 and shall be applied with a 50 percent overlap. Primer shall be as recommended by the tape manufacturer.

3.1.6 Pipe Sleeves and Flashing

Pipe sleeves shall be furnished and set in their proper and permanent location.

3.1.6.1 Sleeve Requirements

Pipes passing through concrete or masonry walls or concrete floors or roofs shall be provided with pipe sleeves fitted into place at the time of construction. Sleeves are not required for cast-iron soil pipe passing through concrete slab on grade, except where penetrating a membrane waterproof floor. A modular mechanical type sealing assembly may be installed in lieu of a waterproofing clamping flange and caulking and sealing of annular space between pipe and sleeve. The seals shall consist of interlocking synthetic rubber links shaped to continuously fill the annular space between the pipe and sleeve with corrosion-protected carbon steel bolts, nuts, and pressure plates. The links shall be loosely assembled with bolts to form a continuous rubber belt around the pipe with a pressure plate under each bolt head and each nut. After the seal assembly is properly positioned in the sleeve, tightening of the bolt shall cause the rubber sealing elements to expand and provide a watertight seal between the pipe and the sleeve. Each seal assembly shall be sized as recommended by the manufacturer to fit the pipe and sleeve involved. Sleeves shall not be installed in structural members, except where indicated or approved. Rectangular and square openings shall be as detailed. Each sleeve shall extend through its respective floor, or roof, and shall be cut flush with each surface, except for special circumstances. Pipe sleeves passing through floors in wet areas such as mechanical equipment rooms, lavatories, kitchens, and other plumbing fixture areas shall extend a minimum of 102 mm above the finished floor. Unless otherwise indicated, sleeves shall be of a size to provide a minimum of 6.4 mm clearance between bare pipe and inside of sleeve or between jacket over insulation and sleeves. Sleeves in bearing walls shall be steel pipe or cast-iron pipe. Sleeves for membrane waterproof floors shall be steel pipe, cast-iron pipe, or plastic pipe. Membrane clamping devices shall be provided on pipe sleeves for waterproof floors. Sleeves in nonbearing walls or ceilings may be steel pipe, cast-iron pipe, galvanized sheet metal with lock-type longitudinal seam, or moisture-resistant fiber or plastic. Plastic sleeves shall not be used in nonbearing fire walls, roofs, or floor/ceilings. Except as otherwise specified, the annular space between pipe and sleeve, or between jacket over insulation and sleeve, shall be sealed as indicated with sealants conforming to ASTM C 920 and with a primer, backstop material and surface preparation as specified in Section 07900 JOINT SEALING. Pipes passing through sleeves in concrete floors over crawl spaces shall be sealed as specified above. The annular space between pipe and sleeve or between jacket over insulation and sleeve shall not be sealed for interior walls which are not designated as fire rated. Sleeves through below-grade walls in contact with earth shall be recessed 12.7 mm from wall surfaces on both sides. Annular space between pipe and sleeve shall be filled with backing material and sealants in the joint between the pipe and concrete or masonry wall as specified above. Sealant selected for the earth side of the wall shall be compatible with dampproofing/waterproofing materials that are to be applied over the joint sealant.

3.1.6.2 Flashing Requirements

Pipes passing through roof or floor waterproofing membrane shall be installed through a **16 ounce** copper flashing, each within an integral skirt or flange. Flashing shall be suitably formed, and the skirt or flange shall extend not less than 203 mm from the pipe and shall be set over the roof or floor membrane in a solid coating of bituminous cement. The flashing shall extend up the pipe a minimum of

254 mm. For cleanouts, the flashing shall be turned down into the hub and caulked after placing the ferrule. Pipes passing through pitched roofs shall be flashed, using lead or copper flashing, with an adjustable integral flange of adequate size to extend not less than 203 mm from the pipe in all directions and lapped into the roofing to provide a watertight seal. The annular space between the flashing and the bare pipe or between the flashing and the metal-jacket-covered insulation shall be sealed as indicated. Flashing for dry vents shall be turned down into the pipe to form a waterproof joint. Pipes, up to and including 254 mm in diameter, passing through roof or floor waterproofing membrane may be installed through a cast-iron sleeve with caulking recess, anchor lugs, flashing-clamp device, and pressure ring with brass bolts. Flashing shield shall be fitted into the sleeve clamping device. Pipes passing through wall waterproofing membrane shall be sleeved as described above. A waterproofing clamping flange shall be installed.

3.1.6.3 Waterproofing

Waterproofing at floor-mounted water closets shall be accomplished by forming a flashing guard from soft-tempered sheet copper. The center of the sheet shall be perforated and turned down approximately 38 mm to fit between the outside diameter of the drainpipe and the inside diameter of the cast-iron or steel pipe sleeve. The turned-down portion of the flashing guard shall be embedded in sealant to a depth of approximately 38 mm; then the sealant shall be finished off flush to floor level between the flashing guard and drainpipe. The flashing guard of sheet copper shall extend not less than 203 mm from the drainpipe and shall be lapped between the floor membrane in a solid coating of bituminous cement. If cast-iron water closet floor flanges are used, the space between the pipe sleeve and drainpipe shall be sealed with sealant and the flashing guard shall be upturned approximately 38 mm to fit the outside diameter of the drainpipe and the inside diameter of the water closet floor flange. The upturned portion of the sheet fitted into the floor flange shall be sealed.

3.1.6.4 Optional Counterflashing

Instead of turning the flashing down into a dry vent pipe, or caulking and sealing the annular space between the pipe and flashing or metal-jacket-covered insulation and flashing, counterflashing may be accomplished by utilizing the following:

a. A standard roof coupling for threaded pipe up to 152 mm in diameter.

b. A tack-welded or banded-metal rain shield around the pipe.

3.1.6.5 Pipe Penetrations of Slab on Grade Floors

Where pipes, fixture drains, floor drains, cleanouts or similar items penetrate slab on grade floors, except at penetrations of floors with waterproofing membrane as specified in paragraphs Flashing Requirements and Waterproofing, a groove 6.4 to 12.7 mm wide by 6.4 to 9.5 mm deep shall be formed around the pipe, fitting or drain. The groove shall be filled with a sealant as specified in Section 07900 JOINT SEALING.

3.1.7 Fire Seal

Where pipes pass through fire walls, fire-partitions, fire-rated pipe chase walls or floors above grade, a fire seal shall be provided as specified in Section 07840 FIRESTOPPING.

3.1.8 Supports

3.1.8.1 General

Hangers used to support piping 52 mm and larger shall be fabricated to permit adequate adjustment after erection while still supporting the load. Pipe guides and anchors shall be installed to keep pipes in accurate alignment, to direct the expansion movement, and to prevent buckling, swaying, and undue strain. Piping subjected to vertical movement when operating temperatures exceed ambient temperatures shall be supported by variable spring hangers and supports or by constant support hangers. In the support of multiple pipe runs on a common base member, a clip or clamp shall be used where each pipe crosses the base support member. Spacing of the base support members shall not exceed the hanger and support spacing required for an individual pipe in the multiple pipe run. Threaded sections of rods shall not be formed or bent.

3.1.8.2 Pipe Supports and Structural Bracing, Seismic Requirements

Piping and attached valves shall be supported and braced to resist seismic loads as specified Section 13080 SEISMIC PROTECTION FOR MECHANICAL, ELECRICAL EQUIPMENT. Structural steel required for reinforcement to properly support piping, headers, and equipment, but not shown, shall be provided. Material used for supports shall be as specified in Section 05120 STRUCTURAL STEEL.

3.1.8.3 Pipe Hangers, Inserts, and Supports

Installation of pipe hangers, inserts and supports shall conform to MSS SP-58 and MSS SP-69, except as modified herein.

a. Types 5, 12, and 26 shall not be used.

b. Type 3 shall not be used on insulated pipe.

c. Type 18 inserts shall be secured to concrete forms before concrete is placed. Continuous inserts which allow more adjustment may be used if they otherwise meet the requirements for type 18 inserts.

d. Type 19 and 23 C-clamps shall be torqued per MSS SP-69 and shall have both locknuts and retaining devices furnished by the manufacturer. Field-fabricated C-clamp bodies or retaining devices are not acceptable.

e. Type 20 attachments used on angles and channels shall be furnished with an added malleable-iron heel plate or adapter.

f. Type 24 may be used only on trapeze hanger systems or on fabricated frames.

g. Type 39 saddles shall be used on insulated pipe 102 mm and larger when the temperature of the medium is 15.5 degrees C or higher. Type 39 saddles shall be welded to the pipe.

h. Type 40 shields shall:

(1) Be used on insulated pipe less than 102 mm.

(2) Be used on insulated pipe 102 mm and larger when the temperature of the medium is 15.5 degrees C or less.

(3) Have a high density insert for pipe 52 mm and larger and for smaller pipe sizes when the insulation is suspected of being visibly compressed, or distorted at or near the shield/insulation interface. High density inserts shall have a density of **8 pcf** or greater.

i. Horizontal pipe supports shall be spaced as specified in MSS SP-69 and a support shall be installed not over 304.8 mm from the pipe fitting joint at each change in direction of the piping. Pipe supports shall be spaced not over 1.5 m apart at valves. Operating temperatures in determining hanger spacing for PVC or CPVC pipe shall be 49 degrees C for PVC and 82 degrees C for CPVC. Horizontal pipe runs shall include allowances for expansion and contraction.

j. Vertical pipe shall be supported at each floor, except at slab-on-grade, at intervals of not more than 4.6 m nor more than 2.4 m from end of risers, and at vent terminations. Vertical pipe risers shall include allowances for expansion and contraction.

k. Type 40 shields used on insulated pipe shall have high density inserts with a density of **8 pcf** or greater.

l. Type 35 guides using steel, reinforced polytetrafluoroethylene (PTFE) or graphite slides shall be provided to allow longitudinal pipe movement. Slide materials shall be suitable for the system operating temperatures, atmospheric conditions, and bearing loads encountered. Lateral restraints shall be provided as needed. Where steel slides do not require provisions for lateral restraint the following may be used:

(1) On pipe 102 mm and larger when the temperature of the medium is 15.5 degrees C or higher, a Type 39 saddle, welded to the pipe, may freely rest on a steel plate.

(2) On pipe less than 102 mm a Type 40 shield, attached to the pipe or insulation, may freely rest on a steel plate.

(3) On pipe 102 mm and larger carrying medium less that 15.5 degrees C a Type 40 shield, attached to the pipe or insulation, may freely rest on a steel plate.

m. Pipe hangers on horizontal insulated pipe shall be the size of the outside diameter of the insulation. The insulation shall be continuous through the hanger on all pipe sizes and applications.

n. Where there are high system temperatures and welding to piping is not desirable, the type 35 guide shall include a pipe cradle, welded to the guide structure and strapped securely to the pipe. The pipe shall be separated from the slide material by at least 102 mm or by an amount adequate for the insulation, whichever is greater.

o. Hangers and supports for plastic pipe shall not compress, distort, cut or abrade the piping, and shall allow free movement of pipe except where otherwise required in the control of expansion/contraction.

3.1.9 Welded Installation

Plumbing pipe weldments shall be as indicated. Changes in direction of piping shall be made with welding fittings only; mitering or notching pipe to form elbows and tees or other similar type construction will not be permitted. Branch connection may be made with either welding tees or forged branch outlet fittings. Branch outlet fittings shall be forged, flared for improvement of flow where attached to the run, and reinforced against external strains. Beveling, alignment, heat treatment, and inspection of weld shall conform to ASME B31.1. Weld defects shall be removed and repairs made to the weld, or the weld joints shall be entirely removed and rewelded. After filler metal has been removed from its original package, it shall be protected or stored so that its characteristics or welding properties are not affected. Electrodes that have been wetted or that have lost any of their coating shall not be used.

3.1.10 Pipe Cleanouts

Pipe cleanouts shall be the same size as the pipe except that cleanout plugs larger than 102 mm will not be required. A cleanout installed in connection with cast-iron soil pipe shall consist of a long-sweep 1/4 bend or one or two 1/8 bends extended to the place shown. An extra-heavy cast-brass or cast-iron ferrule with countersunk cast-brass head screw plug shall be caulked into the hub of the fitting and shall be flush with the floor. Cleanouts in connection with other pipe, where indicated, shall be T-pattern, 90-degree branch drainage fittings with cast-brass screw plugs, except plastic plugs shall be installed in plastic pipe. Plugs shall be the same size as the pipe up to and including 102 mm. Cleanout tee branches with screw plug shall be installed at the foot of soil and waste stacks, at the foot of interior downspouts, on each connection to building storm drain where interior downspouts are indicated, and on each building drain outside the building. Cleanout tee branches may be omitted on stacks in single story buildings with slab-on-grade construction or where less than 18 inches of crawl space is provided under the floor. Cleanouts on pipe concealed in partitions shall be provided with chromium plated bronze, nickel bronze, nickel brass or stainless steel flush type access cover plates. Round access covers shall be provided and secured to plugs with securing screw. Square access covers may be provided with matching frames, anchoring lugs and cover screws. Cleanouts in finished walls shall have access covers and frames installed flush with the finished wall. Cleanouts installed in finished floors subject to foot traffic shall be provided with a chrome-plated cast brass, nickel brass, or nickel bronze cover secured to the plug or cover frame and set flush with the finished floor. Heads of fastening screws shall not project above the cover surface. Where cleanouts are provided with adjustable heads, the heads shall be cast iron.

3.2 WATER HEATERS AND HOT WATER STORAGE TANKS

3.2.1 Relief Valves

No valves shall be installed between a relief valve and its water heater or storage tank. The P&T relief valve shall be installed where the valve actuator comes in contact with the hottest water in the heater. Whenever possible, the relief valve shall be installed directly in a tapping in the tank or heater; otherwise, the P&T valve shall be installed in the hot-water outlet piping. A vacuum relief valve shall be provided on the cold water supply line to the hot-water storage tank or water heater and mounted above and within 6 inches above the top of the tank or water heater.

3.2.2 Installation of Gas Fired Water Heater

Installation shall conform to NFPA NFPA 54/ANSI Z223.1 for gas fired and NFPA 31 for oil fired. Storage water heaters that are not equipped with integral heat traps and having vertical pipe risers shall be installed with heat traps directly on both the inlet and outlet. Circulating systems need not have heat traps installed. An acceptable heat trap may be a piping arrangement such as elbows connected so that the inlet and outlet piping make vertically upward runs of not less than 610 mm just before turning downward or directly horizontal into the water heater's inlet and outlet fittings. Commercially available heat traps, specifically designed by the manufacturer for the purpose of effectively restricting the natural tendency of hot water to rise through vertical inlet and outlet piping during standby periods may also be approved.

3.2.4 Heat Traps

Piping to and from each water heater shall be routed horizontally and downward a minimum of 0.61 m before turning in an upward direction.

3.2.5 Connections to Water Heaters

Connections of metallic pipe to water heaters shall be made with dielectric unions or flanges.

3.3 FIXTURES AND FIXTURE TRIMMINGS

Angle stops, straight stops, stops integral with the faucets, or concealed type of lock-shield, and loose-key pattern stops for supplies with threaded, sweat or solvent weld inlets shall be furnished and installed with fixtures. Where connections between copper tubing and faucets are made by rubber compression fittings, a beading tool shall be used to mechanically deform the tubing above the compression fitting. Exposed traps and supply pipes for fixtures and equipment shall be connected to the rough piping systems at the wall, unless otherwise specified under the item. Floor and wall escutcheons shall be as specified. Drain lines and hot water lines of fixtures for handicapped personnel shall be insulated and do not require polished chrome finish. Plumbing fixtures and accessories shall be installed within the space shown.

3.3.1 Fixture Connections

Where space limitations prohibit standard fittings in conjunction with the cast-iron floor flange, special short-radius fittings shall be provided. Connections between earthenware fixtures and flanges on soil pipe shall be made gastight and watertight with a closet-setting compound or neoprene gasket and seal. Use of natural rubber gaskets or putty will not be permitted. Fixtures with outlet flanges shall be set the proper distance from floor or wall to make a first-class joint with the closet-setting compound or gasket and fixture used.

3.3.2 Flushometer Valves

Flushometer valves shall be secured to prevent movement by anchoring the long finished top spud connecting tube to wall adjacent to valve with approved metal bracket. Flushometer valves for water closets shall be installed 991 mm above the floor.

3.3.3 Height of Fixture Rims Above Floor

Lavatories shall be mounted with rim 787 mm above finished floor. Wall-hung drinking fountains and water coolers shall be installed with rim 1067 mm above floor. Wall-hung service sinks shall be mounted with rim 711 mm above the floor. Installation of fixtures for use by the physically handicapped shall be in accordance with CABO A117.1.

3.3.4 Shower Bath Outfits

The area around the water supply piping to the mixing valves and behind the escutcheon plate shall be made watertight by caulking or gasketing.

3.3.5 Fixture Supports

Fixture supports for off-the-floor lavatories, urinals, water closets, and other fixtures of similar size, design, and use, shall be of the chair-carrier type. The carrier shall provide the necessary means of mounting the fixture, with a foot or feet to anchor the assembly to the floor slab. Adjustability shall be provided to locate the fixture at the desired height and in proper relation to the wall. Support plates, in lieu of chair carrier, shall be fastened to the wall structure only where it is not possible to anchor a floor-mounted chair carrier to the floor slab.

3.3.5.1 Support for Solid Masonry Construction

Chair carrier shall be anchored to the floor slab. Where a floor-anchored chair carrier cannot be used, a suitable wall plate shall be imbedded in the masonry wall.

3.3.5.2 Support for Cellular-Masonry Wall Construction

Chair carrier shall be anchored to floor slab. Where a floor-anchored chair carrier cannot be used, a suitable wall plate shall be fastened to the cellular wall using through bolts and a back-up plate.

3.3.5.3 Support for Steel Stud Frame Partitions

Chair carrier shall be used. The anchor feet and tubular uprights shall be of the heavy duty design; and feet (bases) shall be steel and welded to a square or rectangular steel tube upright. Wall plates, in lieu of floor-anchored chair carriers, shall be used only if adjoining steel partition studs are suitably reinforced to support a wall plate bolted to these studs.

3.3.5.4 Support for Wood Stud Construction

Where floor is a concrete slab, a floor-anchored chair carrier shall be used. Where entire construction is wood, wood crosspieces shall be installed. Fixture hanger plates, supports, brackets, or mounting lugs shall be fastened with not less than No. 10 wood screws, 6.35 mm thick minimum steel hanger, or toggle bolts with nut. The wood crosspieces shall extend the full width of the fixture and shall be securely supported.

3.3.5.5 Wall-Mounted Water Closet Gaskets

Where wall-mounted water closets are provided, reinforced wax, treated felt, or neoprene gaskets shall be provided. The type of gasket furnished shall be as recommended by the chair-carrier manufacturer.

3.3.6 Backflow Prevention Devices

Plumbing fixtures, equipment, and pipe connections shall not cross connect or interconnect between a potable water supply and any source of nonpotable water. Backflow preventers shall be installed where indicated and in accordance with NAPHCC-01 at all other locations necessary to preclude a cross-connect or interconnect between a potable water supply and any nonpotable substance. In addition backflow preventers shall be installed at all locations where the potable water outlet is below the flood level of the equipment, or where the potable water outlet will be located below the level of the nonpotable substance. Backflow preventers shall be located so that no part of the device will be submerged. Backflow preventers shall be of sufficient size to allow unrestricted flow of water to the equipment, and preclude the backflow of any nonpotable substance into the potable water system. Access shall be provided for maintenance and testing. Each device shall be a standard commercial unit.

3.3.7 Access Panels

Access panels shall be provided for concealed valves and controls, or any item requiring inspection or maintenance. Access panels shall be of sufficient size and located so that the concealed items may be serviced, maintained, or replaced. Access panels shall be as specified in Section 05500 MISCELLANEOUS METAL.

3.3.9 Traps

Each trap shall be placed as near the fixture as possible, and no fixture shall be double-trapped. Traps installed on cast-iron soil pipe shall be cast iron. Traps installed on steel pipe or copper tubing shall be recess-drainage pattern, or brass-tube type. Traps installed on plastic pipe may be plastic conforming to ASTM D 3311. Traps for acid-resisting waste shall be of the same material as the pipe.

3.4 VIBRATION-ABSORBING FEATURES

Mechanical equipment, including compressors and pumps, shall be isolated from the building structure by approved vibration-absorbing features, unless otherwise shown. Each foundation shall include an adequate number of standard isolation units. Each unit shall consist of machine and floor or foundation fastening, together with intermediate isolation material, and shall be a standard product with printed load rating. Piping connected to mechanical equipment shall be provided with flexible connectors. Isolation unit installation shall limit vibration to **20 percent** of the lowest equipment rpm.

3.4.1 Tank- or Skid-Mounted Compressors

Floor attachment shall be as recommended by compressor manufacturer.

3.4.2 Foundation-Mounted Compressors

Foundation attachment shall be as recommended by the compressor manufacturer.

3.5 WATER METER REMOTE READOUT REGISTER

The remote readout register shall be mounted at the location indicated or as directed by the Contracting Officer.

3.6 IDENTIFICATION SYSTEMS

3.6.1 Identification Tags

Identification tags made of brass, engraved laminated plastic, or engraved anodized aluminum, indicating service and valve number shall be installed on valves, except those valves installed on supplies at plumbing fixtures. Tags shall be 35 mm minimum diameter, and marking shall be stamped or engraved. Indentations shall be black, for reading clarity. Tags shall be attached to valves with No. 12 AWG, copper wire, chrome-plated beaded chain, or plastic straps designed for that purpose.

3.6.2 Color Coding

Color coding for piping identification shall be as specified in Section 09900 PAINTING, GENERAL.

3.6.3 Color Coding Scheme for Locating Hidden Utility Components

Scheme shall be provided in buildings having suspended grid ceilings. The color coding scheme shall identify points of access for maintenance and operation of operable components which are not visible from the finished space and installed in the space directly above the suspended grid ceiling. The operable components shall include valves, dampers, switches, linkages and thermostats. The color coding scheme shall consist of a color code board and colored metal disks. Each colored metal disk shall be approximately 9.5 mm in diameter and secured to removable ceiling panels with fasteners. The fasteners shall be inserted into the ceiling panels so that the fasteners will be concealed from view. The fasteners shall be manually removable without tools and shall not separate from the ceiling panels when panels are dropped from ceiling height. Installation of colored metal disks shall follow completion of the finished surface on which the disks are to be fastened. The color code board shall have the approximate dimensions of 0.91 m width, 762 mm height, and 12.7 mm thickness. The board shall be made of wood fiberboard and framed under glass or 1.6 mm transparent plastic cover. Unless otherwise directed, the color code symbols shall be approximately 19 mm in diameter and the related lettering in 12.7 mm high capital letters. The color code board shall be mounted and located in the mechanical or equipment room.

3.7 ESCUTCHEONS

Escutcheons shall be provided at finished surfaces where bare or insulated piping, exposed to view, passes through floors, walls, or ceilings, except in boiler, utility, or equipment rooms. Escutcheons shall be fastened securely to pipe or pipe covering and shall be satin-finish, corrosion-resisting steel, polished chromium-plated zinc alloy, or polished chromium-plated copper alloy. Escutcheons shall be either one-piece or split-pattern, held in place by internal spring tension or setscrew.

3.8 PAINTING

Painting of pipes, hangers, supports, and other iron work, either in concealed spaces or exposed spaces, is specified in Section 09900 PAINTING, GENERAL.

3.9 TESTS, FLUSHING AND DISINFECTION

3.9.1 Plumbing System

The following tests shall be performed on the plumbing system in accordance with NAPHCC-01.

a. Drainage and Vent Systems Tests.

b. Building Sewers Tests.

c. Water Supply Systems Tests.

3.9.1.1 Test of Backflow Prevention Assemblies

Backflow prevention assembly shall be tested using gauges specifically designed for the testing of backflow prevention assemblies. Gauges shall be tested annually for accuracy in accordance with the University of Southern California's Foundation of Cross Connection Control and Hydraulic Research or the American Water Works Association Manual of Cross Connection (Manual M-14). Report form for each assembly shall include, as a minimum, the following:

Data on Device	Data on Testing Firm
Type of Assembly	Name
Manufacturer	Address
Model Number	Certified Tester
Serial Number	Certified Tester No.
Size	Date of Test
Location	
Test Pressure Readings	Serial Number and Test Data of Gauges

If the unit fails to meet specified requirements, the unit shall be repaired and retested.

3.9.1.3 **Compressed Air Piping** (Nonoil-Free)

Piping systems shall be filled with oil-free dry air or gaseous nitrogen to 1033.5 kPa and hold this pressure for 2 hours with no drop in pressure.

3.9.2 Defective Work

If inspection or test shows defects, such defective work or material shall be replaced or repaired as necessary and inspection and tests shall be repeated. Repairs to piping shall be made with new materials. Caulking of screwed joints or holes will not be acceptable.

3.9.3 System Flushing

Before tests, potable water piping shall be flushed. In general, sufficient water shall be used to produce a minimum water velocity of 0.76 m per second through piping being flushed. Flushing shall be continued until entrained dirt and other foreign materials have been removed and until discharge water shows no discoloration. System shall be drained at low points. Strainer screens shall be removed,

cleaned, and replaced in line. After flushing and cleaning, systems shall be prepared for service by immediately filling water piping with clean, fresh potable water. Any stoppage, discoloration, or other damage to the finish, furnishings, or parts of the building due to the Contractor's failure to properly clean the piping system shall be repaired by the Contractor. When the system flushing is complete, the hot-water system shall be adjusted for uniform circulation. Flushing devices and automatic control systems shall be adjusted for proper operation.

3.9.4 Operational Test

Upon completion of and prior to acceptance of the installation, the Contractor shall subject the plumbing system to operating tests to demonstrate satisfactory functional and operational efficiency. Such operating tests shall cover a period of not less than 8 hours for each system and shall include the following information in a report with conclusion as to the adequacy of the system:

a. Time, date, and duration of test.

b. Water pressures at the most remote and the highest fixtures.

c. Operation of each fixture and fixture trim.

d. Operation of each valve, hydrant, and faucet.

e. Pump suction and discharge pressures.

f. Temperature of each domestic hot-water supply.

g. Operation of each floor and roof drain by flooding with water.

h. Operation of each vacuum breaker and backflow preventer.

i. Complete operation of each water pressure booster system, including pump start pressure and stop pressure.

j. Compressed air readings at each compressor and at each outlet. Each indicating instrument shall be read at 1/2 hour intervals. The report of the test shall be submitted in quadruplicate. The Contractor shall furnish instruments, equipment, and personnel required for the tests; the Government will furnish the necessary water and electricity.

3.9.5 Disinfection

After operational tests are complete, the entire domestic hot- and cold-water distribution system shall be disinfected. System shall be flushed as specified, before introducing chlorinating material. The chlorinating material shall be hypochlorites or liquid chlorine. Water chlorination procedure shall be in accordance with AWWA M20. The chlorinating material shall be fed into the water piping system at a constant rate at a concentration of at least 50 parts per million (ppm). A properly adjusted hypochlorite solution injected into the main with a hypochlorinator, or liquid chlorine injected into the main through a solution-feed chlorinator and booster pump, shall be used. The chlorine residual shall be checked at intervals to ensure that the proper level is maintained. Chlorine application shall continue until the entire main is filled. The water shall remain in the system for a minimum of 24 hours. Each valve in the

system being disinfected shall be opened and closed several times during the contact period to ensure its proper disinfection. Following the 24-hour period, no less than 25 ppm chlorine residual shall remain in the system. Water tanks shall be disinfected by the addition of chlorine directly to the filling water. Following a 6 hour period, no less than 50 ppm chlorine residual shall remain in the tank. The system including the tanks shall then be flushed with clean water until the residual chlorine is reduced to less than one part per million. During the flushing period each valve and faucet shall be opened and closed several times. From several points in the system the Contracting Officer will take samples of water in proper disinfection containers for bacterial examination. The samples of water shall be tested for total coliform organisms (coliform bacteria, fecal coliform, streptococcal, and other bacteria) in accordance with AWWA-01. The testing method used shall be either the multiple-tube fermentation technique or the membrane-filter technique. The sterilizing shall be repeated until tests indicate the absence of coliform organisms (zero mean coliform density per 100 milliliters) in the samples for at least 2 full days. The system will not be accepted until satisfactory bacteriological results have been obtained.

3.10 PLUMBING FIXTURE SCHEDULE

P-1A WATER CLOSET:

Siphon-jet, elongated bowl, top supply spud, ASME A112.19.2M, wall mounted. Floor flange shall be copper alloy, cast iron, or plastic.

Gasket shall be wax type.

Seat - ANSI Z124.5, Type A, white plastic, elongated, open front.

Flushometer Valve - ASSE ANSI/ASSE 1037, large diaphragm type with non-hold-open feature, backcheck angle control stop, and vacuum breaker. Minimum upper chamber inside diameter of not less than 67 mm at the point where the diaphragm is sealed between the upper and lower chambers. The maximum water use shall be 6.06 L per flush.

Flush Tank - An adequate quantity of water shall be provided to flush and clean the fixture served. The water supply to flush tanks equipped for manual flushing shall be controlled by a float valve or other automatic device designed to refill the tank after each discharge, and to completely shut off the water flow to the tank when the tank is filled to operational capacity. Water closets having their flush valve seat located below the flood level rim of the closet bowl shall have a ballcock installed within a sheath or in a separate and isolated compartment of the tank, both to have visible discharge onto the floor in case of failure. Provision shall be made to automatically supply water to the fixture so as to refill the trap seal after each flushing. The water supply to flush tanks equipped for automatic flushing shall be controlled by a suitable timing device. Ballcocks shall meet ASSE 1002.

Flush Valve in Flush Tank - Flush valve seats in tanks for flushing water closets shall be at least 25 mm above the flood level rim of the bowl connected thereto, except in approved water closet and flush tank combinations designed so that when the tank is flushed and the fixture is clogged or partially clogged, the flush valve shall close tightly so that water will not spill continuously over the rim of the bowl or back flow from the bowl to the tank.

P-1B WATER CLOSET HANDICAPPED:

Height of top rim of bowl shall be in accordance with CABO A117.1; other features are the same as P-1.

P-2 URINAL:

Wall hanging, with integral trap and extended shields, ASME A112.19.2M siphon jet or washout. Top supply connection, back outlet.

Flushometer Valve - Similar to Flushometer Valve for P-1. The maximum water use shall be 3.8 L per flush.]

P-3 LAVATORY:

Manufacturer's standard sink depth, **enameled cast iron** ASME A112.19.1M **countertop,** rectangular.

Faucet - Faucets shall be single control, mixing type. Faucets shall have metal replaceable cartridge control unit or metal cartridge units with diaphragm which can be replaced without special tools. Valves and handles shall be copper alloy. Connection between valve and spout for center-set faucet shall be of rigid metal tubing. Flow shall be limited to 0.95 L per cycle at a flowing water pressure of 551 kPa if a metering device or fitting is used that limits the period of water discharge such as a foot switch or fixture occupancy sensor. If a metering device is not used, the flow shall be limited to 0.158 L/s at a flowing pressure of 551 kPa.

Handles - Cast, formed, or drop forged copper alloy.

Drain - Strainer shall be copper alloy or stainless steel. See paragraph FIXTURES for optional plastic accessories.

P-4 SERVICE SINK:

Enameled cast iron ASME A112.19.1M, copper alloy or stainless steel ASME A112.19.3M trap standard, splashback 9 inches high .

Faucet and Spout - Cast or wrought copper alloy, with top or bottom brace, with backflow preventer. Faucets shall have replaceable seat and the washer shall rotate onto the seat. Handles shall be lever or four arm type. Strainers shall have internal threads.

Drain Assembly - Plug, cup strainer, crossbars, jam nuts, washers, couplings, stopper, etc., shall be copper alloy or stainless steel.

Trap - Cast iron, minimum 3 inch diameter.

P-5 Shower: Shower heads, CID A-A-240 other than emergency showers, shall include a non-removable, tamperproof device to limit water flow to 0.158 L/s when tested in accordance with ASME A112.18.1M.

Wall Mounted: Shower head shall be adjustable spray, stainless steel or chromium plated brass with ball joint. Handles shall be **chrome-plated die cast zinc alloy**. Control valves shall be copper alloy and have metal integral parts of copper alloy, nickel alloy, or stainless steel. Valves shall be **mechanical mixing, single lever** type. Shower head shall be vandalproof with integral back.

Column Showers: Column showers shall have a 1.83 m column height measured from floor to shower head, 12.7 mm IPS threads.

P-6 WATER COOLER DRINKING FOUNTAINS:

Water cooler drinking fountains shall: be self contained, conform to ARI 1010, use one of the fluorocarbon gases conforming to ARI 700 and ASHRAE 34 which has an Ozone Depletion Potential of less than or equal to 0.05, have a capacity to deliver 8 gph of water at 50 degrees F with an inlet water temperature of 80 degrees F while residing in a room environment of 90 degrees F, and have self-closing valves. Self-closing valves shall have automatic stream regulators, have a flow control capability, have a push button actuation or have a cross-shaped index metal turn handle without a hood. Exposed surfaces of stainless steel shall have No. 4 general polish finish. Spouts shall provide a flow of water at least 102 mm high so as to allow the insertion of a cup or glass under the flow of water.

Surface Wall-Mounted - Surface wall-mounted units shall be 13-1/4 inches wide, 13 inches deep, and have a back height of 6 to 203 mm. The bowl shall be made of corrosion resisting steel. The unit shall have concealed fasteners and be for interior installation.

Semi-Recessed Wall-Mounted - Semi-recessed wall-mounted units shall be 14 inches wide, 11 inches deep, and have a back height of 13 to 22 inches. The bowl shall be made of corrosion resisting steel and be for interior installation.

Handicapped - Handicapped units shall be surface wall-mounted. The dimensions shall be 15 inches wide, 508 mm deep, with a back height of 6 to 203 mm. The unit shall clear the floor or ground by at least 203 mm. A clear knee space shall exist between the bottom of the bowl and the floor or ground of at least 27 inches and between the front edge of the bowl and the body of the unit of at least 203 mm. A 8 inch wide clear space shall exist on both sides of the unit. The spout height shall be no more than 36 inches above the floor or ground to the outlet. The spout shall be at the front of the unit and direct the water flow in a trajectory that is parallel or nearly parallel to the front of the unit. The bowl shall be 6-1/2 inches high, made of corrosion resisting steel and be for [interior] [exterior] installation.

Interior Free Standing - Free standing units shall be 40 to 41-1/2 inches high, 12 to 18 inches wide, and 12 to 14 inches deep. The bowl shall be made of corrosion resisting steel and be for interior installation.

3.11 POSTED INSTRUCTIONS

Framed instructions under glass or in laminated plastic, including wiring and control diagrams showing the complete layout of the entire system, shall be posted where directed. Condensed operating instructions explaining preventive maintenance procedures, methods of checking the system for normal safe operation, and procedures for safely starting and stopping the system shall be prepared in typed form, framed as specified above for the wiring and control diagrams and posted beside the diagrams. The framed instructions shall be posted before acceptance testing of the systems.

3.12 PERFORMANCE OF WATER HEATING EQUIPMENT

Standard rating condition terms are as follows:

EF = Energy factor, overall efficiency.

ET = Thermal efficiency with 21 degrees C delta T.

EC = Combustion efficiency, 100 percent - flue loss when smoke = o (trace is permitted).

SL = Standby loss in W/sq. m. based on 27 degrees C delta T, or in percent per hour based on nominal 32 degrees C delta T.

HL = Heat loss of tank surface area.

V = Storage volume in liters

3.12.1 Not Used

3.13 TABLES

TABLE I
PIPE AND FITTING MATERIALS FOR
DRAINAGE, WASTE, AND VENT PIPING SYSTEMS

		SERVICE					
Item #	Pipe and Fitting Materials	A	B	C	D	E	F
1	Cast iron soil pipe and fittings, hub and spigot, ASTM A 74 with compression gaskets	X	X	X	X	X	
2	Cast iron soil pipe and fittings hubless, CISPI 301 and ASTM A 888		X	X	X		
3	Cast iron drainage fittings, threaded, ASME B16.12 for use with Item 10	X		X	X		
4	Cast iron screwed fittings (threaded) ASME B16.4 for use with Item 10			X	X		
5	Grooved pipe couplings, ferrous and non-ferrous pipe ASTM A 536 and ASTM A 47, ASTM A 47M	X	X	X	X		
6	Ductile iron grooved joint fittings for ferrous pipe ASTM A 536 and ASTM A 47, ASTM A 47M for use with Item 5	X	X	X	X		
7	Bronze sand casting grooved joint pressure fittings for non-ferrous pipe ASTM B 584, for use with Item 5	X	X	X	X		
8	Wrought copper grooved joint pressure fittings for non-ferrous pipe ASTM B 75 C12200, ASTM B 152, ASTM B 152M, C11000, ASME B16.22 ASME B16.22 for use with Item 5	X	X				
9	Malleable-iron threaded fittings, galvanized ASME B16.3 for use with Item 10			X	X		
10	Steel pipe, seamless galvanized, ASTM A 53, Type S, Grade B	X		X	X		
11	Seamless red brass pipe, ASTM B 43		X	X			
12	Bronzed flanged fittings, ASME B16.24 for use with Items 11 and 14		X	X			

13	Cast copper alloy solder joint pressure fittings, ASME B16.18 for use with Item 14		X	X			
14	Seamless copper pipe, ASTM B 42			X			
15	Cast bronze threaded fittings, ASME B16.15		X	X			
16	Copper drainage tube, (DWV), ASTM B 306	X*	X	X*	X	X	
17	Wrought copper and wrought alloy solder-joint drainage fittings. ASME B16.29	X	X	X	X	X	
18	Cast copper alloy solder joint drainage fittings, DWV, ASME B16.23	X	X	X	X	X	
19	Acrylonitrile-Butadiene-Styrene (ABS) plastic drain, waste, and vent pipe and fittings ASTM D 2661, ASTM F 628	X	X	X	X	X	X
20	Polyvinyl Chloride plastic drain, waste and vent pipe and fittings, ASTM D 2665, ASTM F 891, (Sch 40) ASTM F 1760	X	X	X	X	X	X
21	Process glass pipe and fittings, ASTM C 1053				X		
22	High-silicon content cast iron pipe and fittings (hub and spigot, and mechanical joint), ASTM A 518, ASTM A 518M	X			X		
23	Polypropylene (PP) waste pipe and fittings, ASTM D 4101				X		
24	Filament-wound reinforced thermosetting resin (RTRP) pipe, ASTM D 2996				X		

SERVICE:

A - Underground Building Soil, Waste and Storm Drain

B - Aboveground Soil, Waste, Drain In Buildings

C - Underground Vent

D - Aboveground Vent

E - Interior Rainwater Conductors Aboveground

F - Corrosive Waste And Vent Above And Belowground (Not Used)

* - Hard Temper

TABLE II

PIPE AND FITTING MATERIALS FOR PRESSURE PIPING SYSTEMS

		SERVICE			
Item No.	Pipe and Fitting Materials	A	B	C	D
1	Malleable-iron threaded fittings, for use with Item 4a	X	X	X	X
	a. Galvanized, ASME B16.3				
	b. Same as "a" but not galvanizedfor use with Item 4b			X	
2	Grooved pipe couplings, ferrous pipe ASTM A 536 and ASTM A 47, ASTM A 47M, non-ferrous pipe, ASTM A 536 and ASTM A 47, ASTM A 47M	X	X	X	
3	Ductile iron grooved joint fittings for ferrous pipe ASTM A 536 and ASTM A 47, ASTM A 47M for use with Item 2	X	X	X	
4	Steel pipe:	X	X	X	X
	a. Seamless, galvanized, ASTM A 53, Type S, Grade B				
	b. Seamless, black, ASTM A 53, Type S, Grade B		X		
5	Seamless red brass pipe, ASTM B 43	X	X	X	
6	Bronze flanged fittings, ASME B16.24 for use with Items 5 and 7	X	X	X	
7	Seamless copper pipe, ASTM B 42	X	X	X	
8	Seamless copper water tube, ASTM B 88, ASTM B 88M	X**	X**	X**	X***
9	Seamless and welded copper distribution tube (Type D) ASTM B 641	X**	X**	X**	X****
10	Cast bronze threaded fittings, ASME B16.15 for use with Items 5 and 7	X	X		X

11	Wrought copper and bronze solder-joint pressure fittings, ASME B16.22 for use with Items 5 and 7	X	X	X	X
12	Cast copper alloy solder-joint pressure fittings, ASME B16.18 for use with Items 8 and 9	X	X	X	X
13	Bronze and sand castings grooved joint pressure fittings for non-ferrous pipe ASTM B 584, for use with Item 2	X	X	X	
14	Steel pipeline flanges, MSS SP-44	X	X		
15	Fittings: brass or bronze; ASME B16.15, and ASME B16.18 ASTM B 828	X	X		
16	Carbon steel pipe unions, socket-welding and threaded, MSS SP-83	X	X	X	
17	Malleable-iron threaded pipe unions ASME B16.39	X	X		
18	Nipples, pipe threaded ASTM A 733	X	X	X	

A - Cold Water Aboveground
B - Hot Water 82 degrees C Maximum Aboveground
C - Compressed Air Lubricated (Not Used)
D - Cold Water Service Belowground Indicated types are minimum wall thicknesses.
** - Type L - Hard
*** - Type K - Hard temper with brazed joints only or type K-soft temper without joints in or under floors
**** - In or under slab floors only brazed joints

END OF SECTION

SECTION 15569

WATER HEATING, GAS.

PART 1 GENERAL

1.1 REFERENCES

The publications listed below form a part of this specification to the extent referenced. The publications are referred to in the text by basic designation only.

AIR MOVEMENT AND CONTROL ASSOCIATION (AMCA)

AMCA 801	(1992) Industrial Process/Power Generation Fans: Specification Guidelines

AMERICAN NATIONAL STANDARDS INSTITUTE (ANSI)

ANSI Z21.13	(1991; Z21.13a; Z21.13b) Gas-Fired Low-Pressure Steam and Hot Water Boilers

AMERICAN SOCIETY FOR TESTING AND MATERIALS (ASTM)

ASTM A 47	(1990; R 1995) Ferritic Malleable Iron Castings
ASTM A 47M	(1990; R 1996) Ferritic Malleable Iron Castings (Metric)
ASTM A 53	(1997) Pipe, Steel, Black and Hot-Dipped, Zinc-Coated, Welded and Seamless
ASTM A 105/A 105M	(1997) Carbon Steel Forgings, for Piping Applications
ASTM A 106	(1997a) Seamless Carbon Steel Pipe for High-Temperature Service
ASTM A 167	(1996) Stainless and Heat-Resisting Chromium-Nickel Steel Plate, Sheet, and Strip
ASTM A 183	(1983; R 1990) Carbon Steel Track Bolts and Nuts
ASTM A 193/A 193M	(1997a) Alloy-Steel and Stainless Steel Bolting Materials for High-Temperature Service
ASTM A 234/A 234M	(1997) Piping Fittings of Wrought Carbon Steel and Alloy Steel for Moderate and High Temperature Services

ASTM A 366/A 366M	(1996) Steel, Sheet, Carbon, Cold-Rolled, Commercial Quality
ASTM A 515/A 515M	(1992) Pressure Vessel Plates, Carbon Steel, for Intermediate- and Higher-Temperature Service
ASTM A 516/A 516M	(1990; R 1996) Pressure Vessel Plates, Carbon Steel, for Moderate- and Lower-Temperature Service
ASTM A 536	(1984; R 1993) Ductile Iron Castings
ASTM A 653/A 653M	(1997) Steel Sheet, Zinc-Coated (Galvanized) or Zinc-Iron Alloy-Coated (Galvannealed) by the Hot-Dip Process
ASTM B 32	(1996) Solder Metal
ASTM B 62	(1993) Composition Bronze or Ounce Metal Castings
ASTM B 75	(1997) Seamless Copper Tube
ASTM B 88	(1996) Seamless Copper Water Tube
ASTM B 88M	(1996) Seamless Copper Water Tube (Metric)
ASTM B 813	(1993) Liquid and Paste Fluxes for Soldering Applications of Copper and Copper Alloy Tube
ASTM B 828	(1992) Making Capillary Joints by Soldering of Copper and Copper Alloy Tube and Fittings
ASTM C 27	(1993) Fireclay and High-Alumina Refractory Brick
ASTM C 34	(1996) Structural Clay Load-Bearing Wall Tile
ASTM C 155	(1997) Standard Classification of Insulating Firebrick
ASTM C 401	(1991; R 1995) Alumina and Alumina Silicate Castable Refractories
ASTM D 596	(1991; R 1995) Reporting Results of Analysis of Water
ASTM D 1384	(1987) Corrosion Test for Engine Coolants in Glassware
ASTM D 1784	(1996) Rigid Poly(Vinyl Chloride) (PVC) Compounds and Chlorinated Poly(Vinyl Chloride) (CPVC) Compounds
ASTM D 2000	(1996) Rubber Products in Automotive Applications

ASTM F 872	(1984; R 1990) Filter Units, Air Conditioning: Viscous-Impingement Type, Cleanable
ASTM F 876	(1997) Crosslinked Polyethylene (PEX) Tubing
ASTM F 1097	(1991; R 1996) Mortar, Refractory (High-Temperature, Air-Setting)
ASTM F 1139	(1988; R 1993) Standard Specification for Steam Traps and Drains

ASME INTERNATIONAL (ASME)

ASME B1.20.1	(1983; R 1992) Pipe Threads, General Purpose (Inch)
ASME ANSI/ASME B16.3	(1992) Malleable Iron Threaded Fittings
ASME ANSI/ASME B16.4	(1992) Gray Iron Threaded Fittings
ASME ANSI/ASME B16.5	(1996; B16.5a) Pipe Flanges and Flanged Fittings NPS 1/2 thru NPS 24
ASME ANSI/ASME B16.9	(1993) Factory-Made Wrought Steel Buttwelding Fittings
ASME B16.11	(1996) Forged Fittings, Socket-Welding and Threaded
ASME B16.15	(1985; R 1994) Cast Bronze Threaded Fittings Classes 125 and 250
ASME B16.18	(1984; R 1994) Cast Copper Alloy Solder Joint Pressure Fittings
ASME B16.21	(1992) Nonmetallic Flat Gaskets for Pipe Flanges
ASME B16.22	(1995; B16.22a) Wrought Copper and Copper Alloy Solder Joint Pressure Fittings
ASME B16.26	(1988) Cast Copper Alloy Fittings for Flared Copper Tubes
ASME B16.34	(1996) Valves - Flanged, Threaded, and Welding End
ASME B16.39	(1986; R 1994) Malleable Iron Threaded Pipe Unions Classes 150, 250, and 300
ASME B19.3	(1991; B19.3a; B19.3b) Safety Standard for Compressors for Process Industries
ASME B31.1	(1995; B31.1a; B31.1b; B31.1c) Power Piping

ASME B31.5	(1992; B31.5a) Refrigeration Piping
ASME B40.1	(1991) Gauges - Pressure Indicating Dial Type - Elastic Element
ASME BPV IV	(1998) Boiler and Pressure Vessel Code; Section IV, Heating Boilers
ASME BPV VIII Div 1	(1998) Boiler and Pressure Vessel Code; Section VIII, Pressure Vessels Division 1 - Basic Coverage
ASME BPV IX	(1998) Boiler and Pressure Vessel Code; Section IX, Welding and Brazing Qualifications
ASME CSD-1	(1995; CSD-1a; CSD-1b) Controls and Safety Devices for Automatically Fired Boilers
ASME PTC 10	(1965; Errata, R 1992) Compressors and Exhausters

AMERICAN WATER WORKS ASSOCIATION (AWWA)

AWWA C606	(1987) Grooved and Shouldered Joints

AMERICAN WELDING SOCIETY (AWS)

AWS A5.8	(1992) Filler Metals for Brazing and Braze Welding
AWS B2.2	(1991) Brazing Procedure and Performance Qualification

COMMERCIAL ITEM DESCRIPTIONS (CID)

CID A-A-1419	(Rev D) Filter Element, Air Conditioning (Viscous-Impingement and Dry Types, Replaceable)

COPPER DEVELOPMENT ASSOCIATION (CDA)

CDA Copper Tube Hdbk	(1995) Copper Tube Handbook

EXPASION JOINT MANUFACTURERS ASSOCIATION (EJMA)

EJMA Stds	(1993; Addenda 1995; Errata 1996) EJMA Standards

HYDRONICS INSTITUTE (HYI)

HYI-01	(1998) I=B=R Ratings for Boilers, Baseboard Radiation and Finned Tube (Commercial) Radiation
HYI-400	(1998) I=B=R, Product Floor Heating

MANUFACTURERS STANDARDIZATION SOCIETY OF THE VALVE AND FITTINGS INDUSTRY (MSS)

MSS SP-25	(1998) Standard Marking System for Valves, Fittings, Flanges and Unions
MSS SP-58	(1993) Pipe Hangers and Supports - Materials, Design and Manufacture
MSS SP-69	(1996) Pipe Hangers and Supports - Selection and Application
MSS SP-70	(1990) Cast Iron Gate Valves, Flanged and Threaded Ends
MSS SP-71	(1997) Cast Iron Swing Check Valves, Flanges and Threaded Ends
MSS SP-72	(1992) Ball Valves with Flanged or Butt-Welding Ends for General Service
MSS SP-73	(1991; R 1996) Brazing Joints for Copper and Copper Alloy Pressure Fittings
MSS SP-78	(1996) Cast Iron Plug Valves, Flanged and Threaded Ends
MSS SP-80	(1997) Bronze Gate, Globe, Angle and Check Valves
MSS SP-85	(1994) Cast Iron Globe & Angle Valves, Flanged and Threaded Ends
MSS SP-110	(1996) Ball Valves Threaded, Socket Welding, Solder Joint, Grooved and Flared Ends

NATIONAL ELECTRICAL MANUFACTURERS ASSOCIATION (NEMA)

NEMA 250	(1991) Enclosures for Electrical Equipment (1000 Volts Maximum)

NATIONAL FIRE PROTECTION ASSOCIATION (NFPA)

NFPA 31	(1997 TIA 97-1) Installation of Oil Burning Equipment
NFPA 54/ANSI Z223.1	(1996; Errata) National Fuel Gas Code
NFPA 70	(1999) National Electrical Code
NFPA 211	(1996; Errata 96-1) Chimneys, Fireplaces, Vents, and Solid Fuel-Burning Appliances
NFPA 8501	(1997) Single Burner Boiler Operation

UNDERWRITERS LABORATORIES (UL)

UL 296	(1994; Rev Aug 1995) Oil Burners
UL 726	(1995) Oil-Fired Boiler Assemblies
UL 795	(1994; Rev Jan 1996) Commercial-Industrial Gas Heating Equipment
UL 1738	(1993; Rev thru Jan 1997) Venting Systems for Gas-Burning Appliances, Categories II, III and IV
UL Gas & Oil Dir	(1996; Supple) Gas and Oil Equipment Directory

1.2 GENERAL REQUIREMENTS

1.2.1 Standard Products

Materials and equipment shall be the standard products of a manufacturer regularly engaged in the manufacture of the products and shall essentially duplicate items that have been in satisfactory use for at least 2 years prior to bid opening. Equipment shall be supported by a service organization that is, in the opinion of the Contracting Officer, reasonably convenient to the site.

1.2.2 Asbestos Prohibition

Asbestos and asbestos-containing products shall not be used.

1.2.3 Nameplates

Each major component of equipment shall have the manufacturer's name, address, type or style, model or serial number, and catalog number on a plate secured to the equipment. Each pressure vessel shall have an approved ASME stamp.

1.2.4 Equipment Guards

Belts, pulleys, chains, gears, couplings, projecting setscrews, keys, and other rotating parts exposed to personnel contact shall be fully enclosed or guarded in accordance with OSHA requirements. High temperature equipment and piping exposed to contact by personnel or where it creates a potential fire hazard shall be properly guarded or covered with insulation of a type specified. Catwalks, operating platforms, ladders, and guardrails shall be provided where shown and shall be constructed in accordance with Section 05500 MISCELLANEOUS METAL.

1.2.5 Verification of Dimensions

The Contractor shall become familiar with details of the work, verify dimensions in the field, and shall advise the Contracting Officer of any discrepancy before performing any work or ordering any materials.

1.2.6 Welding

Welding and nondestructive testing procedures for piping are specified in Section 05093 WELDING PRESSURE PIPING.

1.3 SUBMITTALS

Government approval is required for submittals with a "GA" designation; submittals having an "FIO" designation are for information only. The following shall be submitted in accordance with Section 01330 SUBMITTAL PROCEDURES:

SD-01 Data

Manufacturer's Catalog Data; GA.

Manufacturer's catalog data shall be included with the detail drawings for the following items:

Boilers
Fuel Burning Equipment
Combustion Control Equipment
Pumps
Fittings and Accessories
Fuel Oil Storage System
Water Treatment System

The data shall show model, size, options, etc., that are intended for consideration. Data submitted shall be adequate to demonstrate compliance with contract requirements.

Spare Parts Data; FIO.

Spare parts data for each different item of material and equipment, after approval of the detail drawings and no later than 2 months prior to the date of beneficial occupancy. The data shall include a complete list of parts and supplies, with current unit prices and source of supply, and a list of the parts recommended by the manufacturer to be replaced after 1 and 3 years of service.

Water Treatment Plan; FIO.

Six complete copies of the proposed water treatment plan. The plan shall include a layout, control scheme, a list of the existing water conditions including the items listed in paragraph BOILER WATER TREATMENT, a list of all chemicals, the proportion of chemicals to be added, the final treated water conditions, and a description of environmental concerns for handling the chemicals.

Heating and Fuel Systems Test Procedures; FIO.

Proposed test procedures for the heating system tests and fuel system tests, at least 2 weeks prior to the start of related testing.

Welding Procedures; FIO.

A copy of qualified welding procedures, at least 2 weeks prior to the start of welding operations.

Qualification; FIO.

A statement from the firms proposed to prepare submittals and perform installation and testing, demonstrating successful completion of similar services of at least five projects of similar size or scope, at least 2 weeks prior to the submittal of any other item required by this section.

Welding Qualification; FIO.

A list of names and identification symbols of qualified welders and welding operators, at least 2 weeks prior to the start of welding operations.

SD-04 Drawings

Heating System; GA.

Detail drawings consisting of equipment layout including installation details and electrical connection diagrams; combustion and safety control diagrams; ductwork layout showing the location of supports and hangers, typical hanger details, gauge reinforcement, reinforcement spacing rigidity classification, and static pressure and seal classifications; and piping layout showing the location of guides and anchors, the load imposed on each support or anchor (not required for radiant floor tubing), and typical support details. Drawings shall include any information required to demonstrate that the system has been coordinated and will properly function as a unit and shall show equipment relationship to other parts of the work, including clearances required for operation and maintenance.

SD-06 Instructions

Posted Instructions; FIO.

System layout diagrams that show the layout of equipment, piping, and ductwork and typed condensed operation manuals explaining preventative maintenance procedures, methods of checking the system for normal, safe operation, and procedures for safely starting and stopping the system, framed under glass or laminated plastic, at least 2 weeks prior to the start of related testing. After approval, these items shall be posted where directed.

SD-07 Schedules

Tests; FIO.

Proposed test schedules for the heating system and fuel system tests, at least 2 weeks prior to the start of related testing.

SD-09 Reports

Heating System and Fuel System Tests; FIO.

Test reports for the heating system tests and the fuel system test, upon completion of testing complete with results.

Water Treatment Tests; GA.

(1) The water quality test report shall identify the chemical composition of the boiler water. The report shall include a comparison of the condition of the boiler water with the manufacturer's recommended conditions. Any required corrective action shall be documented within the report.

(2) A test report shall identify the condition of the boiler at the completion of 1 year of service. The report shall include a comparison of the condition of the boiler with the manufacturer's recommended operating conditions.

SD-13 Certificates

Bolts; FIO.

Written certification by the bolt manufacturer that the bolts furnished comply with the requirements of this specification. The certification shall include illustrations of product markings, the date of manufacture, and the number of each type of bolt to be furnished based on this certification.

Boiler Emissions; FIO.

Written certification by the boiler manufacturer that each boiler furnished complies with Federal, state, and local regulations for emissions. The certification shall also include a description of applicable emission regulations. If any boiler is exempt from the emission regulations, the certification shall indicate the reason for the exemption.

SD-19 Operation and Maintenance Manuals

Heating System; GA.

Six complete manuals listing step-by-step procedures required for system startup, operation, shutdown, and routine maintenance, at least 2 weeks prior to field training. The manuals shall include the manufacturer's name, model number, parts list, simplified wiring and control diagrams, troubleshooting guide, and recommended service organization (including address and telephone number) for each item of equipment. Each service organization shall be capable of providing 4 hour onsite response to a service call on an emergency basis.

Water Treatment System; GA.

Six complete copies of operating and maintenance manuals for the step-by-step water treatment procedures, including procedures for testing the water quality.

1.4 MANUFACTURER'S SERVICES

Services of a manufacturer's representative who is experienced in the installation, adjustment, and operation of the equipment specified shall be provided. The representative shall supervise the installing, adjusting, and testing of the equipment.

1.5 DELIVERY AND STORAGE

Equipment delivered and placed in storage shall be protected from the weather, humidity and temperature variations, dirt and dust, and other contaminants.

PART 2 PRODUCTS

2.1 BOILERS

Each boiler shall have the output capacity in kilowatts (kW) as indicated when fired with the specified fuels. The boiler shall be furnished complete with the combination oil/gas burning equipment, boiler fittings and trim, automatic controls, forced draft fan, electrical wiring, insulation, piping connections, and protective jacket. The boiler shall be completely assembled and tested at the manufacturer's plant. Boiler auxiliaries including fans, motors, drives, and similar equipment shall be provided with at least 10 percent excess capacity to allow for field variations in settings and to compensate for any unforeseen increases in pressure losses in appurtenant piping and ductwork. However, the boiler safety devices shall not be sized for a 10 percent excess capacity. The boiler and its accessories shall be designed and installed to permit ready accessibility for operation, maintenance, and service. Boilers shall be designed, constructed, and equipped in accordance with ASME BPV IV. Each boiler shall be of the firetube type and designed for water service as specified herein. The boiler capacity shall be based on the ratings shown in HYI-01 or as certified by the American Boiler Manufacturers Association, or American Gas Association. Duel fuel boiler burner shall be operable on a back-up fuel of Number 2 Fuel Oil.

2.1.1 Firetube Boiler

Boiler shall be self-contained, multipass, packaged type, complete with all accessories, mounted on a structural steel base. When the boilers is operating at maximum output, the heat input rates shall not be greater than 21 Kw per square meter of fireside heating surface. The volume heat input rate shall not be less than 2.07 Kw per cubic meter of furnace volume.

2.1.6 Hot Water Heating Boilers

The hot water heating boiler shall be capable of operating at the specified maximum continuous capacity without damage or deterioration to the boiler, its setting, firing equipment, or auxiliaries. The rated capacity shall be the capacity at which the boiler will operate continuously while maintaining at least the specified minimum efficiency. Boiler shall utilize a minimum three pass design. The boiler design conditions shall be as follows:

a. Boiler design pressure ~~125~~ 208 kPa.

b. Operating pressure at boiler outlet: as indicated.

c. Hot water temperature: as idicated.

d. Temperature differential between boiler discharge and system return 10 degrees C.

e. Water pressure drop**:** as indicated.

f. Outdoor ambient air temperature 28 degrees C (max), -4 degrees C (min).

g. Site elevation 98 m.

h. Maximum continuous capacity:

i. Rated capacity: as indicated (approx 472kw).

j. Maximum exhaust stack temperature 260 degrees C.

k. Boilers with a capacity less than 90 kW shall have an Annual Fuel Utilization Efficiency of at least 80 percent. Gas fired boilers with a capacity of greater than or equal to 90 kW shall have a combustion efficiency of at least 80 percent when fired at the maximum and minimum ratings allowed by the controls. Oil fired boilers with a capacity of greater than or equal to 90 kW shall have a combustion efficiency of at least 83 percent when fired at the maximum and minimum ratings allowed by the controls. Condensing boilers shall have an Annual Fuel Utilization Efficiency of at least 90 percent.

2.2 FUEL BURNING EQUIPMENT

Boiler shall be designed to burn combination gas and oil. Each boiler shall comply with Federal, state, and local emission regulations. ~~As a minimum, the following emission requirements shall be met:~~

~~NOx - 30 parts per million (ppm) corrected to 3% 02.~~

2.2.1 Burners

2.2.1.1 Gas and Combination Gas-Oil Fired Burners and Controls

Burners shall be UL approved mechanical draft burners with all air necessary for combustion supplied by a blower where the operation is coordinated with the burner. Burner shall be provided complete with fuel supply system in conformance with the following safety codes or standards:

a. Combination gas and oil-fired units shall conform to UL 296. Combination gas and oil-fired units less than 3.66 MW input shall conform to ASME CSD-1. Single burner combination gas and oil-fired units equal to or greater than 3.66 MW input shall conform to NFPA 8501. Multiple burner combination gas and oil-fired units greater than or equal to 3.66 MW input shall conform to NFPA 8501.

2.2.1.4 Mechanical pressure atomizer

Mechanical pressure atomizer shall operate solely by the use of oil pressure and shall have no moving parts within the atomizer. Unit shall be capable of completely atomizing the oil through a minimum capacity range of 4 to 1 without changing nozzles or sprayer plates. A constant volume of oil shall be supplied to the atomizer. Variable capacity shall be obtained by adjusting control valve. A diffuser provided to stabilize the flame shall be mounted near the furnace end of the atomizer, but in such a position that oil will not strike it.

2.2.2 Draft Fans

Fans conforming to AMCA 801 forced-draft shall be furnished as an integral part of boiler design. Fans shall be centrifugal with backward-curved or radial-tip blades. Each fan shall be sized for output volume and static pressure rating sufficient for pressure losses, excess air requirements at the burner, leakages, temperature, and elevation corrections for worst ambient conditions, all at full combustion to meet net-rated output at normal firing conditions, plus an overall excess air volume of 10 percent against a 20 percent static overpressure. Noise levels for fans shall not exceed 85 decibels in any octave band at a .914 meters station. Forced draft fan bearings shall be air cooled.

2.2.2.1 Draft Fan Control

Forced-draft centrifugal fans shall have inlet vane controls or shall have variable speed control where indicated. Inlet vanes shall be suitable for use with combustion control equipment. Axial propeller fans shall have variable propeller pitch control.

2.2.2.2 Draft Fan Drives

Fans shall be driven by electric motors.

2.2.3 Draft Damper

Boilers shall be provided with automatic dampers, draft hoods, or barometric dampers as recommended by the boiler manufacturer to maintain proper draft in the boiler. Draft damper shall be provided in a convenient and accessible location in the flue gas outlet from the boiler.

2.2.4 Ductwork

Air ducts connecting the forced-draft fan units with the plenum chamber shall be designed to convey air with a minimum of pressure loss due to friction. Ductwork shall be galvanized sheet metal conforming to ASTM A 653/A 653M. Ducts shall be straight and smooth on the inside with laps made in direction of air flow. Ducts shall have cross-break with enough center height to assure rigidity in the duct section, shall be angle iron braced, and shall be completely free of vibration. Access and inspection doors shall be provided as indicated and required, with a minimum of one in each section between dampers or items of equipment. Ducts shall be constructed with long radius elbows having a centerline radius 1-1/2 times the duct width, or where the space does not permit the use of long radius elbows, short radius or square elbows with factory-fabricated turning vanes may be used. Duct joints shall be substantially airtight and shall have adequate strength for the service, with 38 x 38 x 3 mm angles used where required for strength or rigidity. Duct wall thickness shall be 16 gauge (1.5 mm) for ducts 1500 mm or less and 12 gauge (2.66 mm) for ducts larger than 1500 mm in maximum dimension. Additional ductwork shall be in accordance with Section 15895 AIR SUPPLY, DISTRIBUTION, VENTILATION, AND EXHAUST SYSTEM.

2.3 COMBUSTION CONTROL EQUIPMENT

Combustion control equipment shall be provided as a system by a single manufacturer. Field installed automatic combustion control system shall be installed in accordance with the manufacturer's recommendations and under the direct supervision of a representative of the control manufacturer. The boiler water temperature shall be controlled by a water temperature controller. The equipment shall operate either electrically or pneumatically. If recording instruments are provided, a 1 year supply of ink and 400 blank charts for each recorder shall be furnished.

2.3.1 Pneumatic Controls

If pneumatic operation is provided, a regenerant desiccant air dryer unit shall be provided. Boiler shall shut down on loss of control air pressure. Pneumatic control systems shall conform to ASME B19.3. Air filter regulator sets shall be installed at each control valve and transmitter in the system. The master air filter regulator set on the control panel shall be the dual type where one side can be cleaned and repaired while the other is operating. Exterior control air piping and devices shall be protected form freezing.

2.3.1.1 Air Compressor Unit

The air compressor unit shall be electric-motor driven, polytetrafluoroethylene or carbon ring type automatic air compressor. The compressor unit shall be sized to run not more than 60 percent of the time when all controls are in service. The air compressor unit shall be complete with necessary accessories including automatic pressure control equipment, relief valves, check valves, air filters, moisture traps, and a receiver with ample capacity for emergency operation of the controls for 15 minutes after compressor shutdown. Compressor speed shall not exceed 900 rpm. Motor speed shall not exceed 1750 rpm. The compressor air intake shall be provided with a low drop type air suction filter/silencer suitable for outdoor installation.

2.3.1.2 Air Receiver

The air receiver shall be constructed in accordance with ASME BPV VIII Div 1 for unfired pressure vessels for 1379 kPa working pressure, and shall be equipped with inlet and outlet connections, valved drain connection, minimum 150 mm dial pressure gauge, pop safety valves, and regulator connections.

2.3.2 Electrical controls

Electrical control devices shall be rated at 120 volts and shall be connected as specified in Section 16415 ELECTRICAL WORK, INTERIOR.

2.3.3 Water Temperature Controller

Controller shall be furnished with necessary equipment to automatically adjust the setting to suit the outside weather conditions. The outside air reset controller shall be operated in such a manner that the operating temperatures required by the boiler manufacturer are not compromised.

2.3.4 Boiler Combustion Controls and Positioners

a. Combination gas-oil fired boiler units shall be provided with three position (high-low-off) or modulating combustion controls with gas pilot or spark ignition. Modulating controls shall be provided with a means for manually controlling the firing rate.

b. Modulating control function shall be accomplished using positioning type controls. Air flow ratio and fuel control valve shall be controlled by relative positions of operative levers on a jackshaft responding to a water temperature controller. Positioning type combustion control equipment shall include draft controls with synchronized fuel feed and combustion air supply controls, while and shall maintain the proper air/fuel ratio. The desired furnace draft shall be maintained within 0.254 mm (0.01 inch) of water column.

d. High-low-off controls for boilers with capacities up to 600 kW (2,000,000 Btuh) shall use a water temperature controller in a temperature well in direct contact with the water

2.3.5 Combustion Safety Controls and Equipment

Combustion safety controls and equipment shall be UL listed, microprocessor-based distributed process controller. The system shall include mounting hardware, wiring and cables, and associated equipment. The controller shall be mounted completely wired, programmed, debugged, and tested to perform all of its functions. The controller shall process the signals for complete control and monitoring of the boiler. This shall include maintaining boiler status, starting and stopping all control functions, sequencing control functions and signaling alarm conditions. The program shall be documented and include cross references in description of coils and contacts. Microprocessor shall be able to perform self diagnostics and contain a message center to provide operator with status and failure mode information. Controllers for each boiler shall be mounted on a separate, free standing panel adjacent to the boiler or for packaged boilers on the boiler supporting structure. Control systems and safety devices for automatically fired boilers shall conform to ASME CSD-1. Electrical combustion and safety controls shall be rated at 120 volts, single phase, 60 Hz and shall be connected as specified in Section 16415 ELECTRICAL WORK, INTERIOR. A 100 mm diameter alarm bell shall be provided and shall be located where indicated or directed. The alarm bell shall ring when the boiler is shut down by any safety control or interlock. Indicating lights shall be provided on the control panel. A red light shall indicate flame failure, and a green light shall indicate that the main fuel valve is open. The following shutdown conditions shall require a manual reset before the boiler can automatically recycle:

a. Flame failure.

b. Failure to establish pilot flame.

c. Failure to establish main flame.

d. Low-water cutoff.

2.3.5.1 Low-water Cutoff

Low water cutoff shall be float actuated switch or electrically actuated probe type low-water cutoff. Float chamber shall be provided with a blow-down connection. Cutoff shall cause a safety shutdown and sound an alarm when the boiler water level drops below a safe minimum level. A safety shutdown due to low water shall require manual reset before operation can be resumed and shall prevent recycling of the burner. The cutoff shall be in strict accordance to the latest version of code, ASME CSD-1 Controls and Safety Devices for Automatically Fired Boilers.

a. Feedwater Regulator with Low-Water Cutoff: Regulator shall be an approved design sized for the application. A regulator shall be provided for each boiler. The feeder shall be so arranged that water will be fed to the boiler automatically when the water level in the boiler drops below a preset point and will actuate the alarm bell when the water level reaches the low danger point. The boiler feeder shall be arranged so that the burner and forced-draft fan will stop whenever the water level drops below a preset danger point. The boiler feeder shall be constructed so that the feedwater valve and seat are isolated from the float chamber to

prevent overheating of the feed water and precipitation of scale on either the valve or seat. Each float mechanism, valve, and seat shall be constructed of an approved, durable, corrosion-resistant steel alloy. Valve seats shall be removable and renewable. The regulator shall be equipped with a large, self-cleaning strainer. The drain valve on the regulator shall be the gate or other straight-through type.

b. Pump Controller with Low-Water Cutoff: Controller shall be a design approved by the boiler manufacturer. A pump controller shall be provided for each boiler which is used for space heating and process steam loads or long distribution lines. Pump controller shall control the operation of the burner, forced-draft fan, and pump. Pump controller and low-water cutoff shall have a float-operated mercury switch arranged to start and stop the pump at preset boiler water levels. If the water level in the boiler reaches the low danger point, a second mercury switch shall shut down the burner and actuate the alarm bell.

2.3.5.2 Water Flow Interlock

Hot water boiler limit controls shall be provided to include protection for low boiler water flow and high boiler water temperature. The limit controls shall be interlocked with the combustion control system to effect boiler alarm and shutdown. The controls shall not allow boiler startup unless hot water flow is proven.

2.3.6 Damper Interlock

Controller shall be furnished with necessary equipment to automatically open the wall-mounted damper (LV-9) when the boiler is energized. The damper interlock controller shall be operated in such a manner that the damper is open during boiler operation and closed during boiler shut-down.

2.4 PUMPS

2.4.1 Fuel Oil Pumping and Heating Sets

The integrated, shop-fabricated oil pumping and heating set shall be simplex and be UL approved. Two positive displacement oil meters shall be provided. One meter shall be located on the fuel supply line. The other meter shall be located on the fuel return line. Each set shall include an electric oil heater of adequate capacity to heat the specified fuel oil to ignition temperature at low boiler load until enough hot water is generated to operate the heat exchanger. The electric heater shall be controlled by magnetic starter with a manually-operated On-Off switch in series with a thermostatic control. When oil temperature is raised to proper level and maintained by the hot water heater, the electric heater shall be disconnected automatically by the thermostatic control. Fuel pumps shall be electric-motor-driven. A single filter/basket strainer system shall be installed ahead of the electric oil heater and final discharge filter/strainer system.

2.4.2 Rating and Testing

The pump manufacturer shall submit a certified test report covering the actual test of the unit and certifying that the equipment complies with the indicated requirements.

2.5 COLD WATER CONNECTIONS

Connections shall be provided which includes consecutively in line a strainer, backflow prevention device, and water pressure regulator in that order in the direction of the flow. The backflow prevention device shall be provided as indicated and in compliance with Section 15400, PLUMBING, GENERAL PURPOSE. Cold water fill connections shall be made to the water supply system as indicated. Necessary pipe, fittings, and valves required for water connections between the boiler and cold water main shall be provided as shown. The pressure regulating valve shall be of a type that will not stick or allow pressure to build up on the low side. The valve shall be set to maintain a terminal pressure of approximately,lately 35 kPa in excess of the static head on the system and shall operate within a 15 kPa tolerance regardless of cold water supply piping pressure and without objectionable noise under any condition of operation.

2.6 RADIATORS AND CONVECTORS

Radiators, convectors and associated equipment shall be in accordance with Section 15556 FORCED HOT WATER HEATING SYSTEMS USING WATER AND STEAM HEAT EXCHANGERS

2.8 HEATING AND VENTILATING UNITS

Heating and ventilating units and associated equipment shall be in accordance with Section 15895 AIR SUPPLY, DISTRIBUTION, VENTILATION, AND EXHAUST SYSTEM.

2.9 AIR HANDLING UNITS

Air handling units and associated equipment shall be in accordance with Section 15895 AIR SUPPLY, DISTRIBUTION, VENTILATION, AND EXHAUST SYSTEM.

2.10 FITTINGS AND ACCESSORIES

Boiler fittings and accessories shall be installed with each boiler in accordance with ASME BPV IV, unless otherwise specified.

2.10.1 Soot Blowers

Where indicated, each boiler shall be provided with soot blowers using compressed air as the blowing medium. The soot blower system shall be the automatic sequencing and intermittent puff type. The soot blower units shall be sequenced automatically using successive steps by their controller, each step involving no more than a 70 kPa drop in air pressure at the receiver. After one unit is operated in successive steps through its cycle, the controller shall shift the operation to the second soot blower unit, and so on, until all units on that boiler have been operated, after which the controller shall be shut down automatically by the sequence controls. The soot blower heads shall have elements of suitable material for the highest temperatures encountered in the boiler. The sequence timer shall have provision for manual selection of the soot blower units to be used. Soot blower system for oil fired boilers shall conform to NFPA 8501.

2.10.1.1 Air Compressor Unit

The air compressor unit shall conform to ASME PTC 10 except as specified otherwise. Compressor speed shall not exceed 900 rpm. Motor speed shall not exceed 1750 rpm. The service air requirements shall be as indicated with receivers sized as indicated. The units shall be suitable for heavy-duty service (soot blowing). The compressors shall be simplex type, single-stage, double-acting, with water-jacketed cylinder, fitted with intake and discharge valves of the lightweight feather, disc or plate type, and shall be provided with necessary controls, water-cooled aftercooler, moisture separator, drive, receiver, relief valves, and cooling water controls as required. The compressor air intake shall be provided with an air suction filter/silencer suitable for outdoor installation. The filter shall have a collection efficiency of 99 percent of particles larger than 10 microns. The filter body and media shall withstand a pressure of 850 kPa. The aftercooler shall be the shell-and-tube type designed for air flow through the tubes with steel shell internal baffle plates. The cooling capacity of the after cooler shall be sized for the total capacity of the compressor. The moisture separator shall be provided with an automatic water discharge trap and level gauge. Cooling water controls for regulating compressor cylinder water temperature and after-cooler water temperature shall be thermostatic valve type and shall be installed with a three-valve bypass in the water outlet lines ahead of open sight drain funnels. The compressor shall be equipped with adjustable, pressure type unloader controls suitable for continuous compressor operation.

2.10.1.2 Air Receiver

The air receiver shall be a vertical type constructed in accordance with ASME BPV VIII Div 1 for unfired pressure vessels for 1379 kPa working pressure, and shall be equipped with flanged inlet and outlet connections, valved drain connection, minimum 150 mm dial pressure gauge, pop safety valves, and regulator connections.

2.10.2.4 Wiring

The CEMS equipment shall be provided with plug-in prefabricated cable for interconnection between components. Power supply to the equipment shall be 2-wire, 120 volt nominal or less, 60 Hz, with one side grounded. Electrical devices shall be connected as specified in Section 16415 ELECTRICAL WORK, INTERIOR.

2.10.3 Not Used

2.10.4 Conventional Breeching and Stacks

2.10.4.1 Breeching

Each boiler shall be connected to the stack or flue by breeching constructed of black steel sheets not less than 1.2 mm thick nor less than thickness of stack, whichever is larger. Plastic materials polyetherimide (PEI) and polyethersulfone (PES) are forbidden to be used for vent piping of combustion gases. The clear distance between any portion of the breeching surface and any combustible material shall not be less than that specified in NFPA 211. Joints and seams shall be securely fastened and made airtight. Suitable hinged and gasketed cleanouts shall be provided, which will permit cleaning the entire smoke connection without dismantling. Flexible-type expansion joints shall be provided as required and shall not require packing.

2.10.4.2 Stacks

Individual stub stacks shall extend above the roof in accordance with NFPA. Individual stub stacks shall be 6 m in height when assembled on the boiler and measured from the ground line. Stack section shall be sheet steel having a thickness of not less than 2.47 mm. A 7.92 mm diameter hole shall be provided in the stack not greater than 150 mm from the furnace flue outlet for sampling of the exit gases. A method shall be provided to seal the hole to prevent exhaust gases from entering the boiler room when samples are not being taken. Each stack shall be provided complete with rain hood. Plastic materials polyetherimide (PEI) and polyethersulfone (PES) are forbidden to be used for vent piping of combustion gases.

2.10.6 Expansion Tank

The hot water pressurization system shall include a diaphragm-type expansion tank which will accommodate the expanded water of the system generated within the normal operating temperature range, limiting the pressure increase at all components in the system to the maximum allowable pressure at those components. The only air in the system shall be the permanent sealed-in air cushion contained in the diaphragm-type tank. The sizes shall be as indicated. The expansion tank shall be welded steel, constructed, tested, and stamped in accordance with ASME BPV VIII Div 1 for a working pressure of 850 kPa and precharged to the minimum operating pressure. The tank's air chamber shall be fitted with an air charging valve and pressure gauge. The tank shall be supported by steel legs or bases for vertical installation or steel saddles for horizontal installations. The tank shall have lifting rings and a drain connection. All components shall be suitable for a maximum operating temperature of 120 degrees C.

2.10.7 Air Separator

External air separation tank shall be steel, constructed, tested and stamped in accordance with ASME BPV VIII Div 1 for a working pressure of 850 kPa. The capacity of the air separation tank indicated is minimum.

2.10.8 Filters

Filters shall conform to ASTM F 872 or CID A-A-1419.

2.10.9 Foundation (Setting) Materials

2.10.9.1 Firebrick

Firebrick shall be ASTM C 27 class as recommended by boiler manufacturer.

2.10.9.2 Tile

Tile shall be ASTM C 34, Grade LBX.

2.10.9.3 Insulating Brick

Insulating brick shall comply with ASTM C 155.

2.10.9.4 Refractory Mortar

Refractory mortar shall comply with ASTM F 1097.

2.10.9.5 Castable Refractories

Castable refractories shall be ASTM C 401. The minimum modulus of rupture for transverse strength shall be not less than 4136 kPa after being heat soaked for 5 hours or more at a temperature in excess of 1371.1 degrees C.

2.10.10 Steel Sheets

2.10.10.1 Galvanized Steel

Galvanized steel shall be ASTM A 653/A 653M.

2.10.10.2 Uncoated Steel

Uncoated steel shall be ASTM A 366/A 366M, composition, condition, and finish best suited to the intended use. Gauge numbers specified refer to manufacturer's standard gauge.

2.10.11 Gaskets

Gaskets shall be nonasbestos material in accordance with ASME B16.21, full face or self-centering type. The gaskets shall be of the spiral wound type with graphite filler material.

2.10.12 Steel Pipe and Fittings

2.10.12.1 Steel Pipe

Steel pipe shall be ASTM A 53, Type E or S, Grade A or B, black steel, standard weight.

2.10.12.2 Steel Pipe Fittings

Fittings shall have the manufacturer's trademark affixed in accordance with MSS SP-25 so as to permanently identify the manufacturer.

2.10.12.3 Steel Flanges

Flanged fittings including flanges, bolts, nuts, bolt patterns, etc. shall be in accordance with ASME ANSI/ASME B16.5 class 150 and shall have the manufacturers trademark affixed in accordance with MSS SP-25. Flange material shall conform to ASTM A 105/A 105M. Flanges for high temperature water systems shall be serrated or raised-face type. Blind flange material shall conform to ASTM A 516/A 516M cold service and ASTM A 515/A 515M for hot service. Bolts shall be high strength or intermediate strength with material conforming to ASTM A 193/A 193M.

2.10.12.4 Welded Fittings

Welded fittings shall conform to ASTM A 234/A 234M with WPA marking. Buttwelded fittings shall conform to ASME ANSI/ASME B16.9, and socket-welded fittings shall conform to ASME B16.11.

2.10.12.5 Cast-Iron Fittings

Fittings shall be ASME ANSI/ASME B16.4, Class 125, type required to match connecting piping.

2.10.12.6 Malleable-Iron Fittings

Fittings shall be ASME ANSI/ASME B16.3, type as required to match connecting piping.

2.10.12.7 Unions

Unions shall be ASME B16.39, Class 150.

2.10.12.8 Threads

Pipe threads shall conform to ASME B1.20.1.

2.10.12.9 Grooved Mechanical fittings

Joints and fittings shall be designed for not less than 862 kPa service and shall be the product of the same manufacturer. Fitting and coupling houses shall be malleable iron conforming to ASTM A 47, ASTM A 47M, Grade 32510; ductile iron conforming to ASTM A 536, Grade 65-45-12; or steel conforming to ASTM A 106, Grade B or ASTM A 53. Gaskets shall be molded synthetic rubber with central cavity, pressure responsive configuration and shall conform to ASTM D 2000, Grade No. 2CA615A15B44F17Z for circulating medium up to 110 degrees C or Grade N0. M3BA610A15B44Z for circulating medium up to 93 degrees C . Grooved joints shall conform to AWWA C606. Coupling nuts and bolts shall be steel and shall conform to ASTM A 183.

2.10.13 Copper Tubing and Fittings

2.10.13.1 Copper Tubing

Tubing shall be ASTM B 88, ASTM B 88M, Type K or L. Adapters for copper tubing shall be brass or bronze for brazed fittings.

2.10.13.2 Solder-Joint Pressure Fittings

Wrought copper and bronze solder-joint pressure fittings shall conform to ASME B16.22 and ASTM B 75. Cast copper alloy solder-joint pressure fittings shall conform to ASME B16.18 and ASTM B 828.

2.10.13.3 Flared Fittings

Cast copper alloy fittings for flared copper tube shall conform to ASME B16.26 and ASTM B 62.

2.10.13.4 Adapters

Adapters may be used for connecting tubing to flanges and to threaded ends of valves and equipment. Extracted brazed tee joints produced with an acceptable tool and installed as recommended by the manufacturer may be used.

2.10.13.5 Threaded Fittings

Cast bronze threaded fittings shall conform to ASME B16.15.

2.10.13.6 Brazing Material

Brazing material shall conform to AWS A5.8.

2.10.13.7 Brazing Flux

Flux shall be in paste or liquid form appropriate for use with brazing material. Flux shall be as follows: lead-free; have a 100 percent flushable residue; contain slightly acidic reagents; contain potassium borides, and contain fluorides. Silver brazing materials shall be in accordance with AWS A5.8.

2.10.13.8 Solder Material

Solder metal shall conform to ASTM B 32 95-5 tin-antimony.

2.10.13.9 Solder Flux

Flux shall be either liquid or paste form, non-corrosive and conform to ASTM B 813.

2.10.14 Dielectric Unions

Dielectric unions shall have metal connections on both ends. The ends shall be threaded, flanged, or brazed to match adjacent piping. Metal parts of the union shall be separated so that the electrical current is below 1 percent of the galvanic current which would exist upon metal-to-metal contact.

2.10.15 Flexible Pipe Connectors

Flexible pipe connectors shall be designed for 861.8 kPa or 1034.2 kPa service. Connectors shall be installed where indicated. The flexible section shall be constructed of rubber, tetrafluoroethylene resin, or corrosion-resisting steel, bronze, monel, or galvanized steel. Materials used and the configuration shall be suitable for the pressure, vacuum, and temperature medium. The flexible section shall be suitable for service intended and may have threaded, welded, soldered, flanged, or socket ends. Flanged assemblies shall be equipped with limit bolts to restrict maximum travel to the manufacturer's standard limits. Unless otherwise indicated, the length of the flexible connectors shall be as recommended by the manufacturer for the service intended. Internal sleeves or liners, compatible with circulating medium, shall be provided when recommended by the manufacturer. Covers to protect the bellows shall be provided where indicated.

2.10.16 Pipe Supports

Pipe supports shall conform to MSS SP-58 and MSS SP-69.

2.10.17 Pipe Expansion

2.10.17.1 Expansion Loops

Expansion loops and offsets shall provide adequate expansion of the main straight runs of the system within the stress limits specified in ASME B31.1. The loops and offsets shall be cold-sprung and installed where indicated. Pipe guides and anchors shall be provided as indicated.

2.10.17.2 Expansion Joints

Expansion joints shall provide for either single or double slip of the connected pipes, as required or indicated, and for not less than the transverse indicated. The joints shall be designed for a hot waterworking pressure not less than **[_____] kPa** and shall be in accordance with applicable requirements of EJMA Stds and ASME B31.1. End connection shall be flanged. Anchor bases or support bases shall be provided as indicated or required. Sliding surfaces and water wetted surfaces shall be chromium plated or fabricated of corrosion resistant steel. Initial setting shall be made in accordance with the manufacturer's recommendations to compensate for an ambient temperature at time of installation. Pipe alignment guides shall be installed as recommended by the joint manufacturer, but in any case shall not be more than 1.5 m from expansion joint, except in lines 100 mm or smaller guides shall be installed not more than 600 mm from the joint. Service outlets shall be provided where indicated.

a. Bellows-type joints shall be flexible, guided expansion joints. The expansion element shall be stabilized corrosion resistant steel. Bellows-type expansion joints shall conform to the applicable requirements of EJMA Stds and ASME B31.1 with internal lines. Guiding of piping on both sides of expansion joint shall be in accordance with the published recommendations of the manufacturer of the expansion joint. The joints shall be designed for the working temperature and pressure suitable for the application but shall not be less than 1135 kPa.

b. Flexible ball joints shall be constructed of alloys as appropriate for the service intended. The joints shall be threaded, grooved, flanged, or welded end as required and shall be capable of absorbing the normal operating axial, lateral, or angular movements or combination thereof. Balls and sockets shall be polished, chromium-plated when materials are not of corrosion-resistant steel. The ball type joint shall be designed and constructed in accordance with ASME B31.1 and EJMA Stds. Flanges shall conform to the diameter and drilling of ASME ANSI/ASME B16.5. Molded gaskets shall be suitable for the service intended.

c. Slip type expansion joints shall be EJMA Stds and ASME B31.1, Class 1 or 2. Type II joints shall be suitable for repacking under full line pressure.

2.10.18 Valves

Valves shall be Class 125 and shall be suitable for the application. Grooved ends per AWWA C606 may be used for water service only. Valves in nonboiler external piping shall meet the material, fabrication

and operating requirements of ASME B31.1. The connection type of all valves shall match the same type of connection required for the piping on which installed.

2.10.18.1 Gate Valves

Gate valves 65 mm and smaller shall conform to MSS SP-80 bronze rising stem, threaded, solder, or flanged ends. Gate valves 80 mm and larger shall conform to MSS SP-70 cast iron bronze trim, outside screw and yoke, flanged, or threaded ends.

2.10.18.2 Globe Valves

Globe valves 65 mm and smaller shall conform to MSS SP-80, bronze, threaded, soldered, or flanged ends. Globe valves 80 mm and larger shall conform to MSS SP-85, cast iron, bronze trim, flanged, or threaded ends.

2.10.18.3 Check Valves

Check valves 65 mm and smaller shall conform to MSS SP-80, bronze, threaded, soldered, or flanged ends. Check valves 80 mm and larger shall conform to MSS SP-71, cast iron, bronze trim, flanged, or threaded ends.

2.10.18.4 Angle Valves

Angle valves 65 mm and smaller shall conform to MSS SP-80 bronze, threaded, soldered, or flanged ends. Angle valves 80 mm and larger shall conform to MSS SP-85, cast iron, bronze trim, flanged, or threaded ends.

2.10.18.5 Ball Valves

Ball valves 15 mm and larger shall conform to **MSS SP-72 or MSS SP-110**, ductile iron or bronze, threaded, soldered, or flanged ends.

2.10.18.6 Plug Valves

Plug valves 51 mm and larger shall conform to MSS SP-78. Plug valves smaller than 51 mm shall conform to ASME B16.34.

2.10.18.7 Grooved End Valves

Valves with grooved ends per AWWA C606 may be used if the valve manufacturer certifies that their performance meets the requirements of the standards indicated for each type of valve.

2.10.18.8 Balancing Valves

Balancing valves shall have meter connections with positive shutoff valves. An integral pointer shall register the degree of valve opening. Valves shall be calibrated so that flow rate can be determined when valve opening in degrees and pressure differential across valve is known. Each balancing valve shall be constructed with internal seals to prevent leakage and shall be supplied with preformed insulation. Valves shall be suitable for 120 degrees C temperature and working pressure of the pipe in which

installed. Valve bodies shall be provided with tapped openings and pipe extensions with shutoff valves outside of pipe insulation. The pipe extensions shall be provided with quick connecting hose fittings for a portable meter to measure the pressure differential. One portable differential meter shall be furnished. The meter suitable for the operating pressure specified shall be complete with hoses, vent, and shutoff valves, and carrying case. In lieu of the balancing valve with integral metering connections, a ball valve or plug valve with a separately installed orifice plate or venturi tube may be used for balancing.

2.10.18.9 Automatic Flow Control Valves

In lieu of the specified balancing valves, automatic flow control valves may be provided to maintain constant flow and shall be designed to be sensitive to pressure differential across the valve to provide the required opening. Valves shall be selected for the flow required and provided with a permanent nameplate or tag carrying a permanent record of the factory-determined flow rate and flow control pressure levels. Valves shall control the flow within 5 percent of the tag rating. Valves shall be suitable for the maximum operating pressure of 850 kPa or 150 percent of the system operating pressure, whichever is greater. Where the available system pressure is not adequate to provide the minimum pressure differential that still allows flow control, the system pump head capability shall be increased. Valves shall be suitable for 120 degrees C temperature service. Valve materials shall be same as specified for the heating system check, globe, angle, and gate valves. Valve operator shall be the electric motor type or pneumatic type as applicable. Valve operator shall be capable of positive shutoff against the system pump head. Valve bodies shall be provided with tapped openings and pipe extensions with shutoff valves outside of pipe insulation. The pipe extensions shall be provided with quick connecting hose fittings for a portable meter to measure the pressure differential across the automatic flow control valve. A portable meter shall be provided with accessory kit as recommended for the project by the automatic valve manufacturer.

2.10.18.10 Butterfly Valves

Butterfly valves shall be 2-flange type or lug wafer type, and shall be bubbletight at 1135 kPa. Valve bodies shall be cast iron, malleable iron, or steel. ASTM A 167, Type 404 or Type 316, corrosion resisting steel stems, bronze, or corrosion resisting steel discs, and synthetic rubber seats shall be provided. Valves smaller than 200 mm shall have throttling handles with a minimum of seven locking positions. Valves 200 mm and larger shall have totally enclosed manual gear operators with adjustable balance return stops and position indicators. Valves in insulated lines shall have extended neck to accommodate insulation thickness.

2.10.18.11 Drain valves

Drain valves shall be provided at each drain point of blowdown as recommended by the boiler manufacturer. Piping shall conform to ASME BPV IV and ASTM A 53.

2.10.18.12 Safety Valves

Safety valves shall have steel bodies and shall be equipped with corrosion-resistant trim and valve seats. The valves shall be properly guided and shall be positive closing so that no leakage can occur. Adjustment of the desired back-pressure shall cover the range between 15 and 70 kPa. The adjustment shall be made externally, and any shafts extending through the valve body shall be provided with adjustable stuffing boxes having renewable packing. Boiler safety valves of proper size and of the required number, in accordance with ASME BPV IV, shall be installed so that the discharge will be

through piping extended to a location as indicated. Each discharge pipe for hot water service shall be pitched away from the valve seat.

2.10.19 Strainers

Basket and "Y" type strainers shall be the same size as the pipelines in which they are installed. The strainer bodies shall be heavy and durable, fabricated of cast iron, and shall have bottoms drilled and tapped with a gate valve attached for blowdown purposes. Strainers shall be designed for 200 kPa service and 120 degrees C . The bodies shall have arrows clearly cast on the sides indicating the direction of flow. Each strainer shall be equipped with an easily removable cover and sediment screen. The screen shall be made of 0.795 mm thick corrosion-resistant steel with small perforations numbering not less than 620,000 per square m to provide a net free area through the basket of at least 3.30 times that of the entering pipe. The flow shall be into the screen and out through the perforations.

2.10.20 Pressure Gauges

Gauges shall conform to ASME B40.1 and shall be provided with throttling type needle valve or a pulsation dampener and shutoff valve. Minimum dial size shall be 90 mm. A pressure gauge shall be provided for each boiler in a visible location on the boiler and shall be provided with readings in Kpa and psi.

2.10.21 Thermometers

Thermometers shall be provided with wells and separable corrosion-resistant steel sockets. Thermometers for inlet water and outlet water for each hot water boiler shall be provided in a visible location on the boiler. Thermometers shall have brass, malleable iron, or aluminum alloy case and frame, clear protective face, permanently stabilized glass tube with indicating-fluid column, white face, black numbers, and a minimum 225 mm scale. The operating range of the thermometers shall be 0-100 degrees centigrade . The thermometers shall be provided with readings in degrees centigrade and Fahrenheit.

2.10.22 Air Vents

2.10.22.1 Manual Air Vents

Manual air vents shall be brass or bronze valves or cocks suitable for the pressure rating of the piping system and furnished with threaded plugs or caps.

2.10.22.2 Automatic Air Vents

Automatic air vents shall be 20 mm quick-venting float and vacuum air valves. Each air vent valve shall have a large port permitting the expulsion of the air without developing excessive back pressure, a noncollapsible metal float which will close the valve and prevent the loss of water from the system, an air seal that will effectively close and prevent the re-entry of air into the system when subatmospheric pressures prevail therein, and a thermostatic member that will close the port against the passage of steam from the system. The name of the manufacturer shall be clearly stamped on the outside of each valve. The air vent valve shall be suitable for the pressure rating of the piping system.

2.11 ELECTRICAL EQUIPMENT

Electric motor-driven equipment shall be provided complete with motors, motor starters, and necessary control devices. Electrical equipment, motor control devices, motor efficiencies and wiring shall be as specified in Section 16415 ELECTRICAL WORK, INTERIOR. Motors which are not an integral part of a packaged boiler shall be rated for high efficiency service. Motors which are an integral part of the packaged boiler shall be the highest efficiency available by the manufacturer of the packaged boiler. Motor starters shall be provided complete with properly sized thermal overload protections and other appurtenances necessary for the motor control specified. Starters shall be furnished in general purpose enclosures. Manual or automatic control and protective or signal devices required for the operation specified and any control wiring required for controls and devices but not shown shall be provided.

2.11.1 Motor Ratings

Motors shall be suitable for the voltage and frequency provided. Motors 375 W and larger shall be three-phase, unless otherwise indicated. Motors shall be of sufficient capacity to drive the equipment at the specified capacity without exceeding the nameplate rating on the motor.

2.11.2 Motor Controls

Motor controllers shall be provided complete with properly sized thermal overload protection. Manual or automatic control and protective or signal devices required for the operation specified and any wiring required to such devices shall be provided. Where two-speed or variable-speed motors are indicated, solid-state variable-speed controllers may be provided to accomplish the same function. Solid state variable speed controllers shall be utilized for fractional through 7.46 kW ratings. Adjustable frequency drives shall be used for larger motors.

2.12 INSULATION

Shop and field-applied insulation shall be as specified in Section 15080 THERMAL INSULATION FOR MECHANICAL SYSTEMS.

2.13 TOOLS

Special tools shall be furnished. Special tools shall include uncommon tools necessary for the operation and maintenance of boilers, burners, pumps, fans, controls, meters, special piping systems, and other equipment. Small hand tools shall be furnished within a suitable cabinet, mounted where directed.

2.13.1 Breeching Cleaner

A cleaner shall be provided to clean the breeching. The cleaner shall have a jointed handle of sufficient length to clean the breeching without dismantling.

2.13.2 Tube Cleaner

If a watertube boiler is being furnished, a water-driven tube cleaner with three rotary cutters and rotary wire brush complete with the necessary length of armored water hose, valves, and other appurtenances necessary for operation shall be provided. Tube cleaner and rotary brush shall be provided for each size of water tube in the boiler, with one extra set of cutters for each size cleaner. Necessary valves and

fittings shall be provided to permit ready connection of the cleaner hose to a high-pressure pump for cold water supply to operate the cleaner.

2.13.3 Tube Brush

If a firetube boiler is being furnished, a tube brush, with steel bristles and jointed handle of sufficient length to clean full length of firetubes, shall be provided.

2.13.4 Wrenches

Wrenches shall be provided as required for specialty fittings such as manholes, handholes, and cleanouts. One set of extra gaskets shall be provided for all manholes and handholes, for pump barrels, and other similar items of equipment. Gaskets shall be packaged and properly identified.

2.14 FUEL OIL STORAGE SYSTEM

The fuel oil storage system shall be as specified in Section 13202 FUEL STORAGE SYSTEMS unless noted otherwise.

2.15 BOILER WATER TREATMENT

The water treatment system shall be capable of feeding chemicals and bleeding the system to prevent corrosion and scale within the boiler and piping distribution system. The water shall be treated to maintain the conditions recommended by the boiler manufacturer. Chemicals shall meet required federal, state, and local environmental regulations for the treatment of boilers and discharge to the sanitary sewer. The services of a company regularly engaged in the treatment of boilers shall be used to determine the correct chemicals and concentrations required for water treatment. The company shall maintain the chemical treatment and provide all chemicals required for a period of 1 year from the date of occupancy. Filming amines and proprietary chemicals shall not be used. The water treatment chemicals shall remain stable throughout the operating temperature range of the system and shall be compatible with pump seals and other elements of the system.

2.15.1 Glycol Solutions

A 30 percent concentration by volume of industrial grade propylene glycol shall be provided. The glycol shall be tested in accordance with ASTM D 1384 with less than 0.013 mm penetration per year for all system metals. The glycol shall contain corrosion inhibitors. Silicate based inhibitors shall not be used. The solution shall be compatible with pump seals, other elements of the system, and all water treatment chemicals used within the system.

2.15.2 Test Kits

All required test kits and reagents for determining the proper water conditions shall be provided.

2.15.2 Boiler Water Limits

The boiler manufacturer shall be consulted for the determination of the boiler water chemical composition limits. The boiler water limits shall be as follows unless dictated differently by the boiler manufacturer's recommendations:

Sodium Sulfite	20-40 ppm
Hardness	Less than 2 ppm
pH	9.3 - 9.9

2.15.3 Water Softening System

The water softening system shall be as specified in Section 11250 WATER SOFTENERS, CATION-EXCHANGE (SODIUM CYCLE).

2.15.4 Chemical Feed Pumps

One pump shall be provided for each chemical feed tank. The chemical feed pumps shall be positive displacement diaphragm type. The capacity of the pumps shall be adjustable from 0 to 100 percent while in operation. The discharge pressure of the pumps shall be not less than 1.5 times the pressure at the point of connection. The pumps shall be provided with a pressure relief valve and a check valve mounted in the pump discharge.

2.15.10 Chemical Shot Feeder

A shot feeder shall be provided as indicated. Size and capacity of feeder shall be based upon local requirements and water analysis. The feeder shall be furnished with an air vent, gauge glass, funnel, valves, fittings, and piping.

2.15.11 Chemical Piping

The piping and fittings shall be constructed of schedule 80 PVC steel or stainless steel and shall be suitable for the application.

2.15.12 Test Kits

One test kit of each type required to determine the water quality as outlined within the operation and maintenance manuals shall be provided.

PART 3 EXECUTION

3.1 ERECTION OF BOILER AND AUXILIARY EQUIPMENT

Boiler and auxiliary equipment shall be installed in accordance with manufacturer's written instructions. Proper provision shall be made for expansion and contraction between boiler foundation and floor. This joint shall be packed with suitable nonasbestos rope and filled with suitable compound that will not become soft at a temperature of 40 degrees C. Boilers and firing equipment shall be supported from the foundations by structural steel completely independent of all brickwork. Boiler supports shall permit free expansion and contraction of each portion of the boiler without placing undue stress on any part of the

boiler or setting. Boiler breeching shall be as indicated with full provision for expansion and contraction between all interconnected components.

3.2 PIPING INSTALLATION

Unless otherwise specified, nonboiler external pipe and fittings shall conform to the requirements of ASME B31.1. Pipe installed shall be cut accurately to suit field conditions, shall be installed without springing or forcing, and shall properly clear windows, doors, and other openings. Cutting or other weakening of the building structure to facilitate piping installation will not be permitted. Pipes shall be free of burrs, oil, grease and other foreign material and shall be installed to permit free expansion and contraction without damaging the building structure, pipe, pipe joints, or pipe supports. Changes in direction shall be made with fittings, except that bending of pipe 100 mm and smaller will be permitted provided a pipe bender is used and wide sweep bends are formed. The centerline radius of bends shall not be less than 6 diameters of the pipe. Bent pipe showing kinks, wrinkles, flattening, or other malformations will not be accepted. Vent pipes shall be carried through the roof as directed and shall be properly flashed. Unless otherwise indicated, horizontal supply mains shall pitch down in the direction of flow with a grade of not less than 0.2 percent. Open ends of pipelines and equipment shall be properly capped or plugged during installation to keep dirt or other foreign materials out of the systems. Pipe not otherwise specified shall be uncoated. Unless otherwise specified or shown, final connections to equipment shall be made with malleable-iron unions for steel pipe 65 mm or less in diameter and with flanges for pipe 80 mm or more in diameter. Unions for copper pipe or tubing shall be brass or bronze. Reducing fittings shall be used for changes in pipe sizes. In horizontal hot water lines, reducing fittings shall be eccentric type to maintain the top of the lines at the same level to prevent air binding.

3.2.1 Hot Water Piping and Fittings

Pipe shall be black steel or copper tubing. Fittings for steel piping shall be black malleable iron or cast iron to suit piping. Fittings adjacent to valves shall suit valve material. Grooved mechanical fittings will not be allowed for water temperatures above 110 degrees C (230 degrees F).

3.2.2 Vent Piping and Fittings

Vent piping shall be black steel. Fittings shall be black malleable iron or cast iron to suit piping.

3.2.3 Gauge Piping

Piping shall be copper tubing.

3.2.6 Joints

Joints between sections of steel pipe and between steel pipe and fittings shall be threaded, grooved, flanged or welded as indicated or specified. Except as otherwise specified, fittings 25 mm and smaller shall be threaded; fittings 32 mm and up to but not including 80 mm shall be either threaded, grooved, or welded; and fittings 80 mm and larger shall be either flanged, grooved, or welded. Pipe and fittings 32 mm and larger installed in inaccessible conduit or trenches beneath concrete floor slabs shall be welded. Connections to equipment shall be made with black malleable-iron unions for pipe 65 mm or smaller in diameter and with flanges for pipe 80 mm or larger in diameter. Joints between sections of copper tubing or pipe shall be flared, soldered, or brazed.

3.2.6.1 Threaded Joints

Threaded joints shall be made with tapered threads properly cut and shall be made perfectly tight with a stiff mixture of graphite and oil or with polytetrafluoroethylene tape applied to the male threads only and in no case to the fittings.

3.2.6.2 Welded Joints

Welded joints shall be in accordance with paragraph GENERAL REQUIREMENTS unless otherwise specified. Changes in direction of piping shall be made with welding fittings only; mitering or notching pipe to form elbows and tees or other similar type construction will not be permitted. Branch connections may be made with either welding tees or forged branch outlet fittings, either being acceptable without size limitation. Branch outlet fittings, where used, shall be forged, flared for improved flow characteristics where attached to the run, reinforced against external strains, and designed to withstand full pipe bursting strength. Socket weld joints shall be assembled so that the space between the end of the pipe and the bottom of the socket is no less than 1.5 mm and no more than 3 mm.

3.2.6.3 Grooved Mechanical Joints

Grooved mechanical joints may be provided for hot water systems in lieu of unions, welded, flanged, or screwed piping connections in low temperature hot water systems where the temperature of the circulating medium does not exceed 110 degrees C. Grooves shall be prepared according to the coupling manufacturer's instructions. Pipe and groove dimensions shall comply with the tolerances specified by the coupling manufacturer. The diameter of grooves made in the field shall be measured using a "go/no-go" gauge, vernier or dial caliper, or narrow-land micrometer. Groove width and dimension of groove from end of pipe shall be measured and recorded for each change in grooving tool setup to verify compliance with coupling manufacturer's tolerances. Grooved joints shall not be used in concealed locations. Mechanical joints shall use rigid mechanical pipe couplings, except at equipment connections. At equipment connections, flexible couplings may be used. Coupling shall be of the bolted type for use with grooved end pipes, fittings, valves, and strainers. Couplings shall be self-centering and shall engage in a watertight couple.

3.2.6.4 Flared and Brazed Copper Pipe and Tubing

Tubing shall be cut square, and burrs shall be removed. Both inside of fittings and outside of tubing shall be cleaned thoroughly with sand cloth or steel wire brush before brazing. Annealing of fittings and hard-drawn tubing shall not occur when making connections. Installation shall be made in accordance with the manufacturer's recommendations. Mitering of joints for elbows and notching of straight runs of pipe for tees will not be permitted. Brazed joints shall be made in conformance with AWS B2.2, MSS SP-73, and CDA Copper Tube Hdbk with flux. Copper-to-copper joints shall include the use of copper-phosphorous or copper-phosphorous-silver brazing metal without flux. Brazing of dissimilar metals (copper to bronze or brass) shall include the use of flux with either a copper-phosphorous, copper-phosphorous-silver or a silver brazing filler metal. Joints for flared fittings shall be of the compression pattern. Swing joints or offsets shall be provided in all branch connections, mains, and risers to provide for expansion and contraction forces without undue stress to the fittings or to short lengths of pipe or tubing. Flared or brazed copper tubing to pipe adapters shall be provided where necessary for joining threaded pipe to copper tubing.

3.2.6.5 Soldered Joints

Soldered joints shall be made with flux and are only acceptable for lines 50 mm and smaller. Soldered joints shall conform to ASME B31.5 and CDA Copper Tube Hdbk.

3.2.6.6 Copper Tube Extracted Joint

An extruded mechanical tee joint may be made in copper tube. Joint shall be produced with an appropriate tool by drilling a pilot hole and drawing out the tube surface to form a collar having a minimum height of three times the thickness of the tube wall. To prevent the branch tube from being inserted beyond the depth of the extracted joint, dimpled depth stops shall be provided. The branch tube shall be notched for proper penetration into fitting to assure a free flow joint. Extracted joints shall be brazed using a copper phosphorous classification brazing filler metal. Soldered joints will not be permitted.

3.2.7 Flanges and Unions

Flanges shall be faced true, provided with 1.6 mm thick gaskets, and made square and tight. Where steel flanges mate with cast-iron flanged fittings, valves, or equipment, they shall be provided with flat faces and full face gaskets. Union or flange joints shall be provided in each line immediately preceding the connection to each piece of equipment or material requiring maintenance such as coils, pumps, control valves, and other similar items. Dielectric pipe unions shall be provided between ferrous and nonferrous piping to prevent galvanic corrosion. The dielectric unions shall have metal connections on both ends. The ends shall be threaded, flanged, or brazed to match adjacent piping. The metal parts of the union shall be separated so that the electrical current is below 1 percent of the galvanic current which would exist upon metal-to-metal contact. Gaskets, flanges, and unions shall be installed in accordance with manufacturer's recommendations.

3.2.8 Branch Connections

3.2.8.1 Branch Connections for Hot Water Systems

Branches from the main shall pitch up or down as shown to prevent air entrapment. Connections shall ensure unrestricted circulation, eliminate air pockets, and permit complete drainage of the system. Branches shall pitch with a grade of not less than 8 mm in 1 m. When indicated, special flow fittings shall be installed on the mains to bypass portions of the water through each radiator. Special flow fittings shall be standard catalog products and shall be installed as recommended by the manufacturer.

3.2.12 Flared, Brazed, and Soldered Copper Pipe and Tubing

Copper tubing shall be flared, brazed, or soldered. Tubing shall be cut square, and burrs shall be removed. Both inside of fittings and outside of tubing shall be cleaned thoroughly with sand cloth or steel wire brush before brazing. Annealing of fittings and hard-drawn tubing shall not occur when making connections. Installation shall be made in accordance with the manufacturer's recommendations. Mitering of joints for elbows and notching of straight runs of pipe for tees will not be permitted. Joints for flared fittings shall be of the compression pattern. Swing joints or offsets shall be provided on branch connections, mains, and risers to provide for expansion and contraction forces without undue stress to the fittings or to short lengths of pipe or tubing. Pipe adapters shall be provided where

necessary for joining threaded pipe to copper tubing. Brazed joints shall be made in conformance with MSS SP-73, and CDA Copper Tube Hdbk. Copper-to-copper joints shall include the use of copper-phosphorous or copper-phosphorous-silver brazing metal without flux. Brazing of dissimilar metals (copper to bronze or brass) shall include the use of flux with either a copper-phosphorous, copper-phosphorous-silver, or a silver brazing filler metal. Soldered joints shall be made with flux and are only acceptable for lines 50 mm or smaller. Soldered joints shall conform to ASME B31.5 and shall be in accordance with CDA Copper Tube Hdbk.

3.2.13 Copper Tube Extracted Joint

An extracted mechanical tee joint may be made in copper tube. Joint shall be produced with an appropriate tool by drilling a pilot hole and drawing out the tube surface to form a collar having a minimum height of three times the thickness of the tube wall. To prevent the branch tube from being inserted beyond the depth of the extracted joint, dimpled depth stops shall be provided. The branch tube shall be notched for proper penetration into fitting to assure a free flow joint. Extracted joints shall be brazed using a copper phosphorous classification brazing filler metal. Soldered joints will not be permitted.

3.2.14 Supports

Hangers used to support piping 50 mm and larger shall be fabricated to permit adequate adjustment after erection while still supporting the load. Pipe guides and anchors shall be installed to keep pipes in accurate alignment, to direct the expansion movement, and to prevent buckling, swaying, and undue strain. Piping subjected to vertical movement when operating temperatures exceed ambient temperatures shall be supported by variable spring hangers and supports or by constant support hangers. Threaded rods which are used for support shall not be formed or bent.

3.2.14.1 Seismic Requirements for Supports and Structural Bracing

Piping and attached valves shall be supported and braced to resist seismic loads as specified in Section 13080 SEISMIC PROTECTION FOR MECHANICAL, ELECTRICAL EQUIPMENT. Structural steel required for reinforcement to properly support piping, headers, and equipment, but not shown, shall be provided in this section. Material used for supports shall be as specified in Section 05120 STRUCTURAL STEEL.

3.2.14.2 Pipe Hangers, Inserts, and Supports

Pipe hangers, inserts, and supports shall conform to MSS SP-58 and MSS SP-69, except as modified herein.

a. Types 5, 12, and 26 shall not be used.

b. Type 3 shall not be used on insulated pipe which has a vapor barrier. Type 3 may be used on insulated pipe that does not have a vapor barrier if clamped directly to the pipe, if the clamp bottom does not extend through the insulation, and if the top clamp attachment does not contact the insulation during pipe movement.

c. Type 18 inserts shall be secured to concrete forms before concrete is placed. Continuous inserts which allow more adjustment may be used if they otherwise meet the requirements for Type 18 inserts.

d. Type 19 and 23 C-clamps shall be torqued per MSS SP-69 and have both locknuts and retaining devices furnished by the manufacturer. Field fabricated C-clamp bodies or retaining devices are not acceptable.

e. Type 20 attachments used on angles and channels shall be furnished with an added malleable-iron heel plate or adapter.

f. Type 24 may be used only on trapeze hanger systems or on fabricated frames.

g. Horizontal pipe supports shall be spaced as specified in MSS SP-69 and a support shall be installed not over 300 mm from the pipe fitting joint at each change in direction of the piping. Pipe supports shall be spaced not over 1500 mm apart at valves.

h. Vertical pipe shall be supported at each floor, except at slab-on-grade, and at intervals of not more than 4500 mm, not more than 2400 mm from end of risers, and at vent terminations.

i. Type 35 guides using steel, reinforced polytetrafluoroethylene (PTFE) or graphite slides shall be provided where required to allow longitudinal pipe movement. Lateral restraints shall be provided as required. Slide materials shall be suitable for the system operating temperatures, atmospheric conditions, and bearing loads encountered.

(1) Where steel slides do not require provisions for restraint of lateral movement, an alternate guide method may be used. On piping 100 mm and larger, a Type 39 saddle may be welded to the pipe and freely rested on a steel plate. On piping under 100 mm , a Type 40 protection shield may be attached to the pipe or insulation and freely rested on a steel slide plate.

(2) Where there are high system temperatures and welding to piping is not desirable, the Type 35 guide shall include a pipe cradle welded to the guide structure and strapped securely to the pipe. The pipe shall be separated from the slide material by at least 100 mm or by an amount adequate for the insulation, whichever is greater.

j. Except for Type 3, pipe hangers on horizontal insulated pipe shall be the size of the outside diameter of the insulation.

k. Piping in trenches shall be supported as indicated.

l. Structural steel attachments and brackets required to support piping, headers, and equipment, but not shown, shall be provided under this section. Material and installation shall be as specified under Section 05120 STRUCTURAL STEEL. Pipe hanger loads suspended from steel joist between panel points shall not exceed 22 kg. Loads exceeding 22 kg shall be suspended from panel points.

3.2.14.3 Multiple Pipe Runs

In the support of multiple pipe runs on a common base member, a clip or clamp shall be used where each pipe crosses the base support member. Spacing of the base support member shall not exceed the hanger and support spacing required for any individual pipe in the multiple pipe run. The clips or clamps shall be rigidly attached to the common base member. A clearance of 3 mm shall be provided between the pipe insulation and the clip or clamp for piping which may be subjected to thermal expansion.

3.2.15 Anchors

Anchors shall be provided where necessary to localize expansion or to prevent undue strain on piping. Anchors shall consist of heavy steel collars with lugs and bolts for clamping and attaching anchor braces, unless otherwise indicated. Anchor braces shall be installed in the most effective manner to secure the desired results, using turnbuckles where required. Supports, anchors, or stays shall not be attached where they will injure the structure or adjacent construction during installation or by the weight of expansion of the pipeline.

3.2.16 Valves

Valves shall be installed where indicated, specified, and required for functioning and servicing of the systems. Valves shall be safely accessible. Swing check valves shall be installed upright in horizontal lines and in vertical lines only when flow is in the upward direction. Gate and globe valves shall be installed with stems horizontal or above. Valves to be brazed shall be disassembled prior to brazing and all packing removed. After brazing, the valves shall be allowed to cool before reassembling.

3.2.17 Pipe Sleeves

Pipe passing through concrete or masonry walls or concrete floors or roofs shall be provided with pipe sleeves fitted into place at the time of construction. A waterproofing clamping flange shall be installed as indicated where membranes are involved. Sleeves shall not be installed in structural members except where indicated or approved. Rectangular and square openings shall be as detailed. Each sleeve shall extend through its respective wall, floor, or roof. Sleeves through walls shall be cut flush with wall surface. Sleeves through floors shall extend above top surface of floor a sufficient distance to allow proper flashing or finishing. Sleeves through roofs shall extend above the top surface of roof at least 150 mm for proper flashing or finishing. Unless otherwise indicated, sleeves shall be sized to provide a minimum clearance of 6 mm between bare pipe and sleeves or between jacket over insulation and sleeves. Sleeves in waterproofing membrane floors, bearing walls, and wet areas shall be galvanized steel pipe or cast-iron pipe. Sleeves in nonbearing walls, floors, or ceilings may be galvanized steel pipe, cast-iron pipe, or galvanized sheet metal with lock-type longitudinal seam. Except in pipe chases or interior walls, the annular space between pipe and sleeve or between jacket over insulation and sleeve in nonfire rated walls shall be sealed as indicated and specified in Section 07900 JOINT SEALING. Metal jackets shall be provided over insulation passing through exterior walls, firewalls, fire partitions, floors, or roofs.

a. Metal jackets shall not be thinner than 0.1524 mm thick aluminum, if corrugated, and 0.4 mm thick aluminum, if smooth.

b. Metal jackets shall be secured with aluminum or stainless steel bands not less than 9 mm wide and not more than 200 mm apart. When penetrating roofs and before fitting the metal jacket

into place, a 15 mm wide strip of sealant shall be run vertically along the inside of the longitudinal joint of the metal jacket from a point below the backup material to a minimum height of 1000 mm above the roof. If the pipe turns from vertical to horizontal, the sealant strip shall be run to a point just beyond the first elbow. When penetrating waterproofing membrane for floors, the metal jacket shall extend from a point below the back-up material to a minimum distance of 50 mm above the flashing. For other areas, the metal jacket shall extend from a point below the backup material to a point 300 mm above material to a minimum distance of 50 mm above the flashing. For other areas, the metal jacket shall extend from a point below the backup material to a point 300 mm above the floor; when passing through walls above grade, the jacket shall extend at least 100 mm beyond each side of the wall.

3.2.17.1 Pipes Passing Through Waterproofing Membranes

In addition to the pipe sleeves referred to above, pipes passing through waterproofing membranes shall be provided with a 1.6 mm lead flashing or a 0.55 mm copper flashing, each within an integral skirt or flange. Flashing shall be suitably formed, and the skirt or flange shall extend not less than 200 mm from the pipe and shall set over the membrane in a troweled coating of bituminous cement. The flashing shall extend above the roof or floor a minimum of 250 mm. The annular space between the flashing and the bare pipe or between the flashing and the metal-jacket-covered insulation shall be sealed as indicated. Pipes up to and including 250 mm in diameter which pass through waterproofing membrane may be installed through a cast-iron sleeve with caulking recess, anchor lugs, flashing clamp device, and pressure ring with brass bolts. Waterproofing membrane shall be clamped into place and sealant shall be placed in the caulking recess.

3.2.17.2 Optional Modular Mechanical Sealing Assembly

At the option of the Contractor, a modular mechanical type sealing assembly may be installed in the annular space between the sleeve and conduit or pipe in lieu of a waterproofing clamping flange and caulking and sealing specified above. The seals shall include interlocking synthetic rubber links shaped to continuously fill the annular space between the pipe/conduit and sleeve with corrosion-protected carbon steel bolts, nuts, and pressure plates. The links shall be loosely assembled with bolts to form a continuous rubber belt around the pipe with a pressure plate under each bolt head and each nut. After the seal assembly is properly positioned in the sleeve, tightening of the bolt shall cause the rubber sealing elements to expand and provide a watertight seal between the pipe/conduit and the sleeve. Each seal assembly shall be sized as recommended by the manufacturer to fit the pipe/conduit and sleeve involved.

3.2.17.3 Optional Counterflashing

As alternates to caulking and sealing the annular space between the pipe and flashing or metal-jacket-covered insulation and flashing, counterflashing may consist of standard roof coupling for threaded pipe up to 150 mm in diameter, lead flashing sleeve for dry vents with the sleeve turned down into the pipe to form a waterproof joint, or a tack-welded or banded-metal rain shield around the pipe, sealed as indicated.

3.2.17.4 Fire Seal

Where pipes pass through firewalls, fire partitions, or floors, a fire seal shall be provided as specified in Section 07840 FIRESTOPPING.

3.2.18 Balancing Valves

Balancing valves shall be installed as indicated.

3.2.19 Thermometer Wells

A thermometer well shall be provided in each return line for each circuit in multicircuit systems.

3.2.20 Air Vents

Air vents shall be installed where shown or directed. Air vents shall be installed in piping at all system high points. The vent shall remain open until water rises in the tank or pipe to a predetermined level at which time it shall close tight. An overflow pipe from the vent shall be run to a point designated by the Contracting Officer's representative. The inlet to the air vent shall have a gate valve or ball valve.

3.2.21 Escutcheons

Escutcheons shall be provided at all finished surfaces where exposed piping, bare or insulated, passes through floors, walls, or ceilings except in boiler, utility, or equipment rooms. Escutcheons shall be fastened securely to pipe or pipe covering and shall be chromium-plated iron or chromium-plated brass, either one-piece or split pattern, held in place by internal spring tension or setscrews.

3.2.22 Drains

A drain connection with a 25 mm gate valve or 20 mm hose bib shall be installed at the lowest point in the return main near the boiler. In addition, threaded drain connections with threaded cap or plug shall be installed on the heat exchanger coil on each unit heater or unit ventilator and wherever required for thorough draining of the system.

3.2.23 Strainer Blow-Down Piping

Strainer blow-down connections shall be fitted with a black steel blow-down pipeline routed to an accessible location and provided with a blow-down valve.

3.3 GAS FUEL SYSTEM

Gas piping, fittings, valves, regulators, tests, cleaning, and adjustments shall be in accordance with the Section 15190 GAS PIPING SYSTEMS. NFPA 54/ANSI Z223.1 shall be complied with unless otherwise specified. Burners, pilots, and all accessories shall be listed in UL Gas & Oil Dir. The fuel system shall be provided with a gas tight, manually operated, UL listed stop valve at the gas-supply connections, a gas strainer, a pressure regulator, pressure gauges, a burner-control valve, a safety shutoff valve suitable for size of burner and sequence of operation, and other components required for safe, efficient, and reliable operation as specified. Approved permanent and ready facilities to permit periodic valve leakage tests on the safety shutoff valve or valves shall be provided.

3.4 FUEL OIL SYSTEM

Fuel oil system shall be installed in accordance with NFPA 31, unless otherwise indicated.

3.4.1 Piping and Storage Tank

Fuel oil piping and storage tanks shall be installed in accordance with Section 13202 FUEL STORAGE SYSTEMS, unless indicated otherwise.

3.4.3 Automatic Safety Shutoff Valve

Oil supply line to each oil burner shall be equipped with an automatically operated valve designed to shut off the oil supply in case of fire in the immediate vicinity of the burner. The valve shall be thermoelectrically actuated or thermomechanically actuated type and shall be located immediately downstream of the manual shutoff valve at the day tank inside of the building. If a day tank is not used, the automatic safety valve shall be located immediately downstream of the building shutoff devices where oil supply line enters the building. A thermoelectrical or thermomechanical detection device shall be located over the oil burner to activate the valve. A fire shutoff valve may be combined with other automatic shutoff devices if listed in UL Gas & Oil Dir.

3.4.4 Earthwork

Excavation and backfilling for tanks and piping shall be as specified in Section 02316 EXCAVATION, TRENCHING, AND BACKFILLING FOR UTILITIES SYSTEMS.

3.5.1 Concrete Slab construction

In areas where tubing must cross expansion joints, control joints, or other crack control measures, the tubing shall be installed below the joints. The tubing shall be fastened to the reinforcing steel in accordance with the tubing manufacturer's recommendations. The tubing shall be pressurized prior to and during the concrete pour to ensure system integrity.

3.5.2 Wooden Floor Construction

Tubing shall be fastened to the wood subflooring in accordance with the drawings and the tubing manufacturer's recommendations. The method of attaching the tubing to the flooring shall not cause abrasions on the tubing.

3.5.3 Penetrations to Fire Rated Assemblies

Where pipe pass through firewalls, fire partitions, or floors, a fire seal shall be provided as specified in Section 07840 FIRESTOPPING.

3.6 FIELD PAINTING

Ferrous metal not specified to be coated at the factory shall be cleaned, prepared, and painted as specified in Section 09900 PAINTING, GENERAL. Exposed pipe covering shall be painted as specified in Section 09900 PAINTING, GENERAL. Aluminum sheath over insulation shall not be painted.

3.7 TEST OF BACKFLOW PREVENTION ASSEMBLIES

Backflow prevention assemblies shall be tested in accordance with Section 15400, PLUMBING, GENERAL PURPOSE.

3.8 HEATING SYSTEM TESTS

Before any covering is installed on pipe or heating equipment, the entire heating system's piping, fittings, and terminal heating units shall be hydrostatically tested and proved tight at a pressure of 1-1/2 times the design working pressure, but not less than 689 kPa. Before pressurizing system for test, items or equipment (e.g., vessels, pumps, instruments, controls, relief valves) rated for pressures below the test pressure shall be blanked off or replaced with spool pieces. Before balancing and final operating test, test blanks and spool pieces shall be removed; and protected instruments and equipment shall be reconnected. With equipment items protected, the system shall be pressurized to test pressure. Pressure shall be held for a period of time sufficient to inspect all welds, joints, and connections for leaks, but not less than 2 hours. No loss of pressure will be allowed. Leaks shall be repaired and repaired joints shall be retested. Repair joints shall not be allowed under the floor for floor radiant heating systems. If a leak occurs in tubing located under the floor in radiant heating systems, the entire zone that is leaking shall be replaced. If any repair is made above the floor for floor radiant heating systems, access shall be provided for the installed joint. Caulking of joints shall not be permitted. System shall be drained and after instruments and equipment are reconnected, the system shall be refilled with service medium and maximum operating pressure applied. The pressure shall be held while inspecting these joints and connections for leaks. The leaks shall be repaired and the repaired joints retested. Upon completion of hydrostatic tests and before acceptance of the installation, the Contractor shall balance the heating system in accordance with Section 15990 TESTING, ADJUSTING AND BALANCING OF HVAC SYSTEMS; and operating tests required to demonstrate satisfactory functional and operational efficiency shall be performed. The operating test shall cover a period of at least 24 hours for each system, and shall include, as a minimum, the following specific information in a report, together with conclusions as to the adequacy of the system:

a. Certification of balancing.

b. Time, date, and duration of test.

c. Outside and inside dry bulb temperatures.

d. Temperature of hot water supply leaving boiler.

e. Temperature of heating return water from system at boiler inlet.

f. Quantity of water feed to boiler.

g. Boiler make, type, serial number, design pressure, and rated capacity.

h. Fuel burner make, model, and rated capacity; ammeter and voltmeter readings for burner motor.

i. Circulating pump make, model, and rated capacity, and ammeter and voltmeter readings for pump motor during operation.

j. Flue-gas temperature at boiler outlet.

k. Percent carbon dioxide in flue-gas.

l. Grade or type and calorific value of fuel.

m. Draft at boiler flue-gas exit.

n. Draft or pressure in furnace.

o. Quantity of water circulated.

p. Quantity of fuel consumed.

q. Stack emission pollutants concentration.

Indicating instruments shall be read at half-hour intervals unless otherwise directed. The Contractor shall furnish all instruments, equipment, and personnel required for the tests and balancing. Fuels, water, and electricity shall be obtained as specified in the SPECIAL CONTRACT REQUIREMENTS. The Contractor shall provide a minimum of 100 L of grade No. 2 fuel oil. Operating tests shall demonstrate that fuel burners and combustion and safety controls meet the requirements of ASME CSD-1 or ANSI Z21.13 and NFPA 8501 as applicable.

3.8.1.2 Boiler/Piping Test

At the conclusion of the 1 year period, the boiler shall be inspected for problems due to corrosion and scale. If the boiler is found not to conform to the manufacturer's recommendations, and the water treatment company recommendations have been followed, the water treatment company shall provide all chemicals and labor for cleaning or repairing the equipment as required by the manufacturer's recommendations. If corrosion is found, proper repairs shall be made by the water treatment company.

3.9 CLEANING

3.9.1 Boilers and Piping

After the hydrostatic tests have been made and before the system is balanced and operating tests are performed, the boilers and feed water piping shall be thoroughly cleaned by filling the system with a solution consisting of either 0.5 kg of caustic soda or 0.5 kg of trisodium phosphate per 100 L of water. The proper safety precautions shall be observed in the handling and use of these chemicals. The water shall be heated to approximately 65 degrees C and the solution circulated in the system for a period of 48 hours. The system shall then be drained and thoroughly flushed out with fresh water. Strainers and valves shall be thoroughly cleaned. Prior to operating tests, air shall be removed from all water systems by operating the air vents.

3.9.2 Heating Units

Inside space heating equipment, ducts, plenums, and casing shall be thoroughly cleaned of debris and blown free of small particles of rubbish and dust and then vacuum cleaned before installing outlet faces.

Equipment shall be wiped clean, with all traces of oil, dust, dirt, or paint spots removed. Temporary filters shall be provided for fans that are operated during construction, and new filters shall be installed after construction dirt has been removed from the building, and the ducts, plenum, casings, and other items specified have been vacuum cleaned. System shall be maintained in this clean condition until final acceptance. Bearings shall be properly lubricated with oil or grease as recommended by the manufacturer. Belts shall be tightened to proper tension. Control valves and other miscellaneous equipment requiring adjustment shall be adjusted to setting indicated or directed. Fans shall be adjusted to the speed indicated by the manufacturer to meet specified conditions.

3.10 FUEL SYSTEM TESTS

3.10.1 Fuel Oil System Test

The fuel oil system shall be tested in accordance with Section 13202 FUEL STORAGE SYSTEMS.

3.10.2 Gas System Test

The gas fuel system shall be tested in accordance with the test procedures outlined in NFPA 54/ANSI Z223.1.

3.11 FIELD TRAINING

The Contractor shall conduct a training course for the operating staff as designated by the Contracting Officer. The training period shall consist of a total of 14 days of normal working time and shall start after the system is functionally completed but prior to final acceptance tests. The field instructions shall cover all of the items contained in the approved operation and maintenance instructions, as well as demonstrations of routine maintenance operations and boiler safety devices. The Contracting Officer shall be notified at least 14 days prior to date of proposed conduction of the training course.

END OF SECTION

SECTION 15845

ENERGY RECOVERY SYSTEMS

PART 1 GENERAL

1.1 SUBMITTALS

Government approval is required for submittals with a "GA" designation; submittals having an "FIO" designation are for information only. The following shall be submitted in accordance with Section 01330 SUBMITTAL PROCEDURES:

SD-01 Data

Design Analysis and Calculations

Manufacturer's design data and computations for construction, with design data.

Spare Parts

Spare parts data for each item of equipment provided, after approval of the detail drawings and not later than 2 months before the date of beneficial occupancy. The data shall include a complete list of spare parts and supplies with current unit prices and source of supply.

SD-04 Drawings

Energy Recovery System; GA

Detail drawings consisting of a complete list of equipment and material, including manufacturer's descriptive and technical literature, performance charts and curves, catalog cuts, drawings, and installation instructions. Drawings shall contain schematic diagrams and any other details required to demonstrate that the system has been coordinated and will properly function as a unit. Drawings shall show proposed layout and anchorage of equipment and appurtenances, and equipment relationship to other parts of the work including clearances required for maintenance and operation.

SD-06 Instructions

Posted Instructions; FIO

Proposed diagrams, instructions, and other sheets, prior to posting. Framed instructions under glass or in laminated plastic, shall be posted where directed. Condensed operating instructions explaining preventive maintenance procedures, methods of checking the system for normal safe operation, and procedures for safely starting and stopping the system shall be prepared in typed form, framed as specified above for the wiring and control diagrams, and posted beside the diagrams. The framed instructions shall be posted before acceptance testing of the systems.

SD-08 Statements

Test Procedure; GA.

A proposed performance test procedure, 30 days prior to the proposed test date. The procedure shall contain a complete description of the proposed test with calibration curves or test results furnished by an independent testing laboratory of each instrument, meter, gauge, and thermometer to be used in the tests. The test shall not commence until the procedure has been approved.

SD-09 Reports

Tests; GA

Test reports in booklet form showing all field tests performed to adjust each component and all field tests performed to prove compliance with the specified performance criteria, upon completion and testing of the installed system. Each test report shall indicate the final position of controls.

1.3 DELIVERY AND STORAGE

All equipment delivered and placed in storage shall be stored with protection from the weather, humidity and temperature variation, dirt and dust, or other contaminants.

1.4 VERIFICATION OF DIMENSIONS

The Contractor shall become familiar with all details of the work, verify all dimensions in the field, and shall advise the Contracting Officer of any discrepancy before performing the work.

1.5 MAINTENANCE ACCESSORIES AND TOOLS

All special tools necessary for the operation and maintenance of fans and other equipment shall be furnished.

1.6 WELDING PROCEDURES AND QUALIFICATIONS

Welding and nondestructive testing procedures are specified in Section 15052 WELDING, PRESSURE PIPING.

1.7 OPERATION AND MAINTENANCE MANUALS

The manuals will be approved by the Contracting Officer before acceptance of the installed system. Three complete copies of operation manual for energy recovery system outlining the step-by-step procedures required for system startup, operation, and shutdown shall be provided. The manuals shall include the manufacturer's name, model number, service manual, parts list, and a brief description of all equipment items and their basic operating features. Three copies of maintenance manual listing routine maintenance procedures, possible breakdowns and repairs, and troubleshooting guide shall be provided. The manuals shall include piping layout, equipment layout, and simplified wiring and control diagrams of the system as installed.

PART 2 PRODUCTS

2.1 STANDARD PRODUCTS

Material and equipment shall be the standard products of a manufacturer regularly engaged in the manufacture of the products and shall essentially duplicate items that have been in satisfactory use for at least 2 years prior to bid opening. Equipment shall be supported by a service organization that is, in the opinion of the Contracting Officer, reasonably convenient to the site.

2.2 HEAT RECOVERY EQUIPMENT

A heat recovery system shall be an integrated design package compatible with the gymnasium heating and ventilating system as indicated. The heat recovery system shall be a modular energy recovery wheel type. Modules shall provide a galvanized steel cabinet with internal insulation on external or internal surfaces to prevent water vapor condensation. Energy recovery wheels shall be accessible for service. Recovery wheel shall provide both latent and sensible heat recovery; a drive wheel motor shall be provided within the cabinet. Total enthalpy wheel shall be supplied by the module manufacturer and be constructed of a light weight polymer material having a silica gel desiccant or other competetive coating. Wheel capacity and quantity shall be as indicated.

2.2.1 Nameplates

Each major item of equipment shall have the manufacturer's name, address, type or style, model or serial number, and catalog number on a plate secured to the item of equipment.

Electrical Equipment

Electric motor-driven equipment specified shall be provided complete with motors and necessary motor control devices. Motors and motor control devices shall conform to the applicable requirements of Section 16415 ELECTRICAL WORK, INTERIOR. Unless otherwise indicated, motors of 746 watt (1 hp) 1 hp and above shall be high efficiency type.

PART 3 EXECUTION

3.1 HEAT RECOVERY EQUIPMENT AND AUXILIARIES

3.1.1 Installation

All equipment shall be installed in accordance with manufacturer's instructions and recommendation.

3.1.2 Equipment Guards and Access

Belts, pulleys, couplings, projecting setscrews, keys, and other rotating parts located where personnel contact is possible shall be fully enclosed or guarded. High temperature equipment and piping located within personnel contact or where a potential fire hazard exists shall be properly guarded or covered with insulation of a type specified. Items such as catwalks, operating platforms, ladders, and guardrails shall be provided where shown and shall be constructed in accordance with Section 05500 MISCELLANEOUS METAL.

TESTS

3.2.1 Efficiency and Operating Tests

Upon completion, and before acceptance of the work, the heat recovery plant shall be subjected to such operating tests as may be required to demonstrate satisfactory functional operation. Each operating test shall be conducted at such times as the Contracting Officer may direct. Instruments, test equipment, and test personnel required to properly conduct all tests shall be provided by the Contractor.

3.2.3 Retesting

If any deficiencies are revealed during test, such deficiencies shall be corrected and the tests reconducted at no additional costs to the Government.

3.3 FIELD TRAINING

A field training course shall be provided for designated operating staff members. Training shall be provided for a total of 2 hours of normal working time and shall start after the system is functionally complete, but prior to final acceptance tests. Field training shall cover all of the items contained in the approved operation and maintenance instructions.

3.4 FIELD PAINTING

Ferrous metal surfaces not specified to be coated at the factory shall be cleaned, prepared, and painted as specified in Section 09900 PAINTING, GENERAL.

END OF SECTION

SECTION 15895

AIR SUPPLY, DISTRIBUTION, VENTILATION, AND EXHAUST SYSTEM

PART 1 GENERAL

1.1 REFERENCES

The publications listed below form a part of this specification to the extent referenced. The publications are referred to in the text by basic designation only.

AIR CONDITIONING AND REFRIGERATION INSTITUTE (ARI)

ARI 350	(1986) Sound Rating of Non-Ducted Indoor Air-Conditioning Equipment
ARI ANSI/ARI 410	(1991) Forced-Circulation Air-Cooling and Air-Heating Coils
ARI ANSI/ARI 430	(1989) Central-Station Air-Handling Units
ARI ANSI/ARI 440	(1993) Room Fan-Coil and Unit Ventilator
ARI 445	(1987; R 1993) Room Air-Induction Units
ARI Guideline D	(1987) Application and Installation of Central Station Air-Handling Units

AIR CONDITIONING CONTRACTORS OF AMERICA (ACCA)

ACCA Manual 4	(1990) Installation Techniques for Perimeter Heating & Cooling; 11th Edition

AIR MOVEMENT AND CONTROL ASSOCIATION (AMCA)

AMCA ANSI/AMCA 210	(1985) Laboratory Methods of Testing Fans for Rating
AMCA 300	(1996) Reverberant Room Method for Sound Testing of Fans

AMERICAN BEARING MANUFACTURERS ASSOCIATION (ABEMA)

ABEMA Std 9	(1990) Load Ratings and Fatigue Life for Ball Bearings
ABEMA Std 11	(1990) Load Ratings and Fatigue Life for Roller Bearings

AMERICAN NATIONAL STANDARDS INSTITUTE (ANSI)

ANSI S12.32	(1990; R 1996) Precision Methods for the Determination of Sound Power Levels of Discrete-Frequency and Narrow-Band Noise Sources in Reverberation Rooms

AMERICAN SOCIETY FOR TESTING AND MATERIALS (ASTM)

ASTM A 47	(1990; R 1995) Ferritic Malleable Iron Castings
ASTM A 47M	(1990; R 1996) Ferritic Malleable Iron Castings (Metric)
ASTM A 53	(1997) Pipe, Steel, Black and Hot-Dipped, Zinc-Coated, Welded and Seamless
ASTM A 106	(1997) Seamless Carbon Steel Pipe for High-Temperature Service
ASTM A 123	(1989a) Zinc (Hot-Dip Galvanized) Coatings on Iron and Steel Products
ASTM A 167	(1996) Stainless and Heat-Resisting Chromium-Nickel Steel Plate, Sheet, and Strip
ASTM A 181/A 181M	(1995b) Carbon Steel, Forgings for General-Purpose Piping
ASTM A 183	(1983; R 1990) Carbon Steel Track Bolts and Nuts
ASTM A 193/A 193M	(1997a) Alloy-Steel and Stainless Steel Bolting Materials for High-Temperature Service
ASTM A 234/A 234M	(1997) Piping Fittings of Wrought Carbon Steel and Alloy Steel for Moderate and High Temperature Service
ASTM A 536	(1984; R 1993) Ductile Iron Castings
ASTM A 733	(1993) Welded and Seamless Carbon Steel and Austenitic Stainless Steel Pipe Nipples
ASTM A 924/A 924M	(1996a) General Requirements for Steel Sheet, Metallic-Coated by the Hot-Dip Process
ASTM B 62	(1993) Composition Bronze or Ounce Metal Castings
ASTM B 75	(1995a) Seamless Copper Tube
ASTM B 88	(1996) Seamless Copper Water Tube
ASTM B 88M	(1996) Seamless Copper Water Tube (Metric)

ASTM B 117	(1997) Operating Salt Spray (FOG) Apparatus
ASTM B 650	(1995) Electrodeposited Engineering Chromium Coatings on Ferrous Substrates
ASTM B 813	(1993) Liquid and Paste Fluxes for Soldering Applications for Copper and Copper Alloy Tube
ASTM C 916	(1985; R 1996) Adhesives for Duct Thermal Insulation
ASTM C 1071	(1991) Thermal and Acoustical Insulation (Glass Fiber, Duct Lining Material)
ASTM D 520	(1984; R 1995) Zinc Dust Pigment
ASTM D 1384	(1996) Corrosion Test for Engine Coolants in Glassware
ASTM D 1654	(1992) Evaluation of Painted or Coated Specimens Subjected to Corrosive Environments
ASTM D 1785	(1996a) Poly(Vinyl Chloride) (PVC) Plastic Pipe, Schedules 40, 80, and 120
ASTM D 2000	(1996) Rubber Products in Automotive Applications
ASTM D 2466	(1996a) Poly(Vinyl Chloride) (PVC) Plastic Pipe Fittings, Schedule 40
ASTM D 2564	(1996a) Solvent Cements for Poly(Vinyl Chloride) (PVC) Plastic Piping Systems
ASTM D 2855	(1996) Making Solvent-Cemented Joints with Poly(Vinyl Chloride) (PVC) Pipe and Fittings
ASTM D 3359	(1995a) Measuring Adhesion by Tape Test
ASTM E 84	(1996a) Surface Burning Characteristics of Building Materials
ASTM E 437	(1992) Industrial Wire Cloth and Screens (Square Opening Series)
ASTM F 872	(1984; R 1990) Filter Units, Air-Conditioning: Viscous-Impingement Type, Cleanable
ASTM F 1199	(1988; R 1993) Cast (All Temperature and Pressures) and Welded Pipe Line Strainers (150 psig and 150 degrees F Maximum)

ASTM F 1200	(1988; R 1993) Fabricated (Welded) Pipe Line Strainers (Above 150 psig and 150 degrees F)

AMERICAN SOCIETY OF HEATING, REFRIGERATING AND AIR-CONDITIONING ENGINEERS (ASHRAE)

ASHRAE 15	(1994) Safety Code for Mechanical Refrigeration
ASHRAE 52.1	(1992) Gravimetric and Dust-Spot Procedures for Testing Air-Cleaning Devices Used in General Ventilation for Removing Particulate Matter
ASHRAE ANSI/ASHRAE 68	(1986) Laboratory Method of Testing In-Duct Sound Power Measurement Procedures for Fans
ASHRAE 70	(1991) Method of Testing for Rating the Performance of Air Outlets and Inlets
ASHRAE 84	(1991) Method of Testing Air-to-Air Heat Exchangers

AMERICAN SOCIETY OF MECHANICAL ENGINEERS (ASME)

ASME B1.20.1	(1983; R 1992) Pipe Threads, General Purpose (Inch)
ASME B16.3	(1992) Malleable Iron Threaded Fittings
ASME B16.5	(1996) Pipe Flanges and Flanged Fittings NPS 1/2 thru NPS 24
ASME B16.9	(1993) Factory-Made Wrought Steel Buttwelding Fittings
ASME B16.11	(1996) Forged Fittings, Socket-Welding and Threaded
ASME B16.18	(1984; R 1994) Cast Copper Alloy Solder Joint Pressure Fittings
ASME B16.21	(1992) Nonmetallic Flat Gaskets for Pipe Flanges
ASME B16.22	(1995) Wrought Copper and Copper Alloy Solder Joint Pressure Fittings
ASME B16.26	(1988) Cast Copper Alloy Fittings for Flared Copper Tubes
ASME B16.39	(1986; R 1994) Malleable Iron Threaded Pipe Unions Classes 150, 250, and 300
ASME B31.1	(1995; B31.1a; B31.1b; B31.1c) Power Piping

ASME B40.1	(1991) Gauges - Pressure Indicating Dial Type - Elastic Element
ASME BPV IX	(1998) Boiler and Pressure Vessel Code; Section IX, Welding and Brazing Qualifications

AMERICAN WATER WORKS ASSOCIATION (AWWA)

AWWA C606	(1987) Grooved and Shouldered Joints

AMERICAN WELDING SOCIETY (AWS)

AWS D1.1	(1996) Structural Welding Code - Steel

EXPANSION JOINT MANUFACTURERS ASSOCIATION (EJMA)

EJMA-01	(1993) EJMA Standards

INSTITUTE OF ENVIRONMENTAL SCIENCES (IES)

IES RP-CC-001.3	(1993) HEPA and ULPA Filters

MANUFACTURERS STANDARDIZATION SOCIETY OF THE VALVE AND FITTINGS INDUSTRY (MSS)

MSS SP-25	(1998) Standard Marking System for Valves, Fittings, Flanges and Unions
MSS SP-58	(1993) Pipe Hangers and Supports - Materials, Design and Manufacture
MSS SP-69	(1996) Pipe Hangers and Supports - Selection and Application
MSS SP-70	(1990) Cast Iron Gate Valves, Flanged and Threaded Ends
MSS SP-71	(1997) Cast Iron Swing Check Valves, Flanges and Threaded Ends
MSS SP-72	(1992) Ball Valves with Flanged or Butt-Welding Ends for General Service
MSS SP-80	(1997) Bronze Gate, Globe, Angle and Check Valves
MSS SP-85	(1994) Cast Iron Globe & Angle Valves, Flanged and Threaded Ends
MSS SP-110	(1996) Ball Valves Threaded, Socket-Welding, Solder Joint, Grooved and Flared Ends

NATIONAL ELECTRICAL MANUFACTURERS ASSOCIATION (NEMA)

NEMA MG 1	(1993; Rev 1; Rev 2; Rev 3) Motors and Generators

NATIONAL FIRE PROTECTION ASSOCIATION (NFPA)

NFPA 70	(1996; Errata 96-4) National Electrical Code
NFPA 90A	(1996) Installation of Air Conditioning and Ventilating Systems
NFPA 96	(1994) Ventilation Control and Fire Protection of Commercial Cooking Equipment

NORTH AMERICAN INSULATION MANUFACTURERS ASSOCIATION (NAIMA)

NAIMA AH115	(1993) Fibrous Glass Duct Construction Standards

SHEET METAL AND AIR CONDITIONING CONTRACTORS' NATIONAL ASSOCIATION (SMACNA)

SMACNA-01	(1975) Accepted Industry Practice for Industrial Duct Construction
SMACNA-05	(1992) Fire, Smoke and Radiation Damper Installation Guide for HVAC Systems
SMACNA-06	(1995) HVAC Duct Construction Standards - Metal and Flexible
SMACNA-10	(1985) HVAC Air Duct Leakage Test Manual

UNDERWRITERS LABORATORIES (UL)

UL 94	(1996; Rev thru Jul 1997) Tests for Flammability of Plastic Materials for Parts in Devices and Appliances
UL 181	(1996; Rev Oct 1996) Factory-Made Air Ducts and Air Connectors
UL 214	(1997) Tests for Flame-Propagation of Fabrics and Films
UL 555	(1995) Fire Dampers
UL 586	(1996) High-Efficiency, Particulate, Air Filter Units
UL 705	(1994; Rev thru Mar 1996) Power Ventilators

UL 723	(1996) Test for Surface Burning Characteristics of Building Materials
UL 900	(1994; Rev thru Apr 1997) Test Performance of Air Filter Units
UL 1995	(1995; Rev thru Feb 97) Heating and Cooling Equipment
UL Bld Mat Dir	(1997) Building Materials Directory
UL Elec Const Dir	(1998) Electrical Construction Equipment Directory
UL Fire Resist Dir	(1998) Fire Resistance Directory (2 Vol.)

1.2 COORDINATION OF TRADES

Ductwork, piping offsets, fittings, and accessories shall be furnished as required to provide a complete installation and to eliminate interference with other construction.

1.3 DELIVERY AND STORAGE

Equipment delivered and placed in storage shall be stored with protection from the weather, humidity and temperature variations, dirt and dust, or other contaminants.

1.4 SUBMITTALS

Government approval is required for submittals with a "GA" designation; submittals having an "FIO" designation are for information only. The following shall be submitted in accordance with Section 01330 SUBMITTAL PROCEDURES:

SD-01 Data

Components and Equipment Data; GA

Manufacturer's catalog data shall be included with the detail drawings for the following items. The data shall be highlighted to show model, size, options, etc., that are intended for consideration. Data shall be adequate to demonstrate compliance with contract requirements for the following:

a. Piping Components

b. Ductwork Components

c. Air Systems Equipment

d. Heating Ventilating Units

e. Energy Recovery Devices

SD-04 Drawings

Air Supply, Distribution, Ventilation, and Exhaust Equipment; GA.

Drawings shall consist of equipment layout including assembly and installation details and electrical connection diagrams; ductwork layout showing the location of all supports and hangers, typical hanger details, gauge reinforcement, reinforcement spacing rigidity classification, and static pressure and seal classifications; and piping layout showing the location of all guides and anchors, the load imposed on each support or anchor, and typical support details. Drawings shall include any information required to demonstrate that the system has been coordinated and will properly function as a unit and shall show equipment relationship to other parts of the work, including clearances required for operation and maintenance.

SD-06 Instructions

Test Procedures; FIO.

Proposed test procedures for piping hydrostatic test, ductwork leak test, and performance tests of systems, at least 2 weeks prior to the start of related testing.

Welding Procedures; FIO.

A copy of qualified welding procedures, at least 2 weeks prior to the start of welding operations.

System Diagrams; GA.

Proposed diagrams, at least 2 weeks prior to start of related testing. System diagrams that show the layout of equipment, piping, and ductwork, and typed condensed operation manuals explaining preventative maintenance procedures, methods of checking the system for normal, safe operation, and procedures for safely starting and stopping the system shall be framed under glass or laminated plastic. After approval, these items shall be posted where directed.

SD-07 Schedules

Test Schedules; FIO.

Proposed test schedules for hydrostatic test of piping, ductwork leak test, and performance tests, at least 2 weeks prior to the start of related testing.

Field Training Schedule; FIO.

Proposed schedule for field training, at least 2 weeks prior to the start of related training.

SD-08 Statements

Similar Services; FIO.

Statement demonstrating successful completion of similar services on at least 5 projects of similar size and scope, at least 2 weeks prior to submittal of other items required by this section.

Welding Qualification; FIO.

A list of names and identification symbols of qualified welders and welding operators, at least 2 weeks prior to the start of welding operations.

SD-09 Reports

Test Reports; FIO.

Test reports for the piping hydrostatic test, ductwork leak test, and performance tests in booklet form, upon completion of testing. Reports shall document phases of tests performed including initial test summary, repairs/adjustments made, and final test results.

SD-13 Certificates

Bolts; FIO.

Written certification from the bolt manufacturer that the bolts furnished comply with the requirements of this specification. The certification shall include illustrations of product markings, and the number of each type of bolt to be furnished.

SD-19 Operation and Maintenance Manuals

Air Supply, Distribution, Ventilation, and Exhaust Manuals; GA.

Six manuals listing step-by-step procedures required for system startup, operation, shutdown, and routine maintenance, at least 2 weeks prior to field training. The manuals shall include the manufacturer's name, model number, parts list, list of parts and tools that should be kept in stock by the owner for routine maintenance including the name of a local supplier, simplified wiring and controls diagrams, troubleshooting guide, and recommended service organization (including address and telephone number) for each item of equipment. Each service organization submitted shall be capable of providing 4 hour onsite response to a service call on an emergency basis.

PART 2 PRODUCTS

2.1 STANDARD PRODUCTS

Components and equipment shall be standard products of a manufacturer regularly engaged in the manufacturing of products that are of a similar material, design and workmanship. The standard products shall have been in satisfactory commercial or industrial use for 2 years before bid opening. The 2-year experience shall include applications of components and equipment under similar circumstances and of similar size. The 2 years must be satisfactorily completed by a product which has

been sold or is offered for sale on the commercial market through advertisements, manufacturers' catalogs, or brochures. Products having less than a 2-year field service record will be acceptable if a certified record of satisfactory field operation, for not less than 6000 hours exclusive of the manufacturer's factory tests, can be shown. The equipment items shall be supported by a service organization.

2.2 ASBESTOS PROHIBITION

Asbestos and asbestos-containing products shall not be used.

2.3 NAMEPLATES

Equipment shall have a nameplate that identifies the manufacturer's name, address, type or style, model or serial number, and catalog number.

2.4 EQUIPMENT GUARDS AND ACCESS

Belts, pulleys, chains, gears, couplings, projecting setscrews, keys, and other rotating parts exposed to personnel contact shall be fully enclosed or guarded according to OSHA requirements. High temperature equipment and piping exposed to contact by personnel or where it creates a potential fire hazard shall be properly guarded or covered with insulation of a type specified. Catwalks, operating platforms, ladders, and guardrails shall be provided where shown and shall be constructed according to Section 05500 MISCELLANEOUS METAL.

2.5 PIPING COMPONENTS

Unless otherwise noted, piping components shall be in accordance with Section 15569 WATER HEATING OIL, GAS OR BOTH.

2.5.1 Steel Pipe

Steel pipe shall conform to ASTM A 53, Schedule 40, Grade A or B, Type E or S.

2.5.2 Joints and Fittings For Steel Pipe

Joints shall be welded, flanged, threaded, or grooved as indicated. If not otherwise indicated, piping 25 mm and smaller shall be threaded; piping larger than 25 mm and smaller than 76 mm shall be either threaded, grooved, or welded; and piping 76 mm and larger shall be grooved, welded, or flanged. Rigid grooved mechanical joints and fittings may only be used in serviceable aboveground locations where the temperature of the circulating medium does not exceed 110 degrees C. Flexible grooved joints shall be used only as a flexible connector with grooved pipe system. Unless otherwise specified, grooved piping components shall meet the corresponding criteria specified for the similar welded, flanged, or threaded component specified herein. The manufacturer of each fitting shall be permanently identified on the body of the fitting according to MSS SP-25.

2.5.2.1 Welded Joints and Fittings

Welded fittings shall conform to ASTM A 234/A 234M, and shall be identified with the appropriate grade and marking symbol. Butt-welded fittings shall conform to ASME B16.9. Socket-welded fittings shall conform to ASME B16.11.

2.5.2.2 Flanged Joints and Fittings

Flanges shall conform to ASTM A 181/A 181M and ASME B16.5, Class 150. Gaskets shall be nonasbestos compressed material according to ASME B16.21, 1.6 mm thickness, full face or self-centering flat ring type. The gaskets shall contain aramid fibers bonded with styrene butadiene rubber (SBR) or nitrile butadiene rubber (NBR). Bolts, nuts, and bolt patterns shall conform to ASME B16.5. Bolts shall be high or intermediate strength material conforming to ASTM A 193/A 193M.

2.5.2.3 Threaded Joints and Fittings

Threads shall conform to ASME B1.20.1. Unions shall conform to ASME B16.39, Class 150. Nipples shall conform to ASTM A 733. Malleable iron fittings shall conform to ASME B16.3, type as required to match piping.

2.5.2.4 Grooved Mechanical Joints and Fittings

Joints and fittings shall be designed for not less than 861 kPa service and shall be the product of the same manufacturer. Fitting and coupling houses shall be malleable iron conforming to ASTM A 47,and ASTM A 47M, Grade 32510; ductile iron conforming to ASTM A 536, Grade 65-45-12; or steel conforming to ASTM A 106, Grade B or ASTM A 53. Gaskets shall be molded synthetic rubber with central cavity, pressure responsive configuration and shall conform to ASTM D 2000 Grade No. 2CA615A15B44F17Z for circulating medium up to 110 degrees C or Grade No. M3BA610A15B44Z for circulating medium up to 93 degrees C. Grooved joints shall conform to AWWA C606. Coupling nuts and bolts shall be steel and shall conform to ASTM A 183.

2.5.3 Copper Tube

Copper tube shall conform to ASTM B 88, and ASTM B 88M, Type K or L.

2.5.4 Joints and Fittings For Copper Tube

Wrought copper and bronze solder-joint pressure fittings shall conform to ASME B16.22 and ASTM B 75. Cast copper alloy solder-joint pressure fittings shall conform to ASME B16.18. Cast copper alloy fittings for flared copper tube shall conform to ASME B16.26 and ASTM B 62. Brass or bronze adapters for brazed tubing may be used for connecting tubing to flanges and to threaded ends of valves and equipment. Extracted brazed tee joints produced with an acceptable tool and installed as recommended by the manufacturer may be used.

2.5.5 Valves

Valves shall be Class 125 and shall be suitable for the intended application. Valves shall meet the material, fabrication and operating requirements of ASME B31.1. Chain operators shall be provided for valves located 3.05 m or higher above the floor. Valves in sizes larger than 25 mm and used on steel

pipe systems, may be provided with rigid grooved mechanical joint ends. Such grooved end valves shall be subject to the same requirements as rigid grooved mechanical joints and fittings and, shall be provided by the same manufacturer as the grooved pipe joint and fitting system.

2.5.5.1 Gate Valves

Gate valves 63.5 mm and smaller shall conform to MSS SP-80 and shall be bronze with rising stem and threaded, solder, or flanged ends. Gate valves 76 mm and larger shall conform to MSS SP-70 and shall be cast iron with bronze trim, outside screw and yoke, and flanged or threaded ends.

2.5.5.2 Globe Valves

Globe valves 63.5 mm and smaller shall conform to MSS SP-80, bronze, threaded, soldered, or flanged ends. Globe valves 76 mm and larger shall conform to MSS SP-85 and shall be cast iron with bronze trim and flanged, or threaded ends.

2.5.5.3 Check Valves

Check valves 63.5 mm and smaller shall conform to MSS SP-80 and shall be bronze with threaded, soldered, or flanged ends. Check valves 76 mm and larger shall conform to MSS SP-71 and shall be cast iron with bronze trim and flanged or threaded ends.

2.5.5.4 Angle Valves

Angle valves 63.5 mm and smaller shall conform to MSS SP-80 and shall be bronze with threaded, soldered, or flanged ends. Angle valves 76 mm and larger shall conform to MSS SP-85 and shall be cast iron with bronze trim and flanged, or threaded ends.

2.5.5.5 Ball Valves

Ball valves 12.7 mm and larger shall conform toMSS SP-72 or MSS SP-110, and shall be ductile iron or bronze with threaded, soldered, or flanged ends.

2.5.5.6 Balancing Valves

Balancing valves 52 mm or smaller shall be bronze with NPT connections for black steel pipe and brazed connections for copper tubing. Valves 25 mm or larger may be all iron with threaded or flanged ends. The valves shall have a square head or similar device and an indicator arc and shall be designed for 121 degrees C. Iron valves shall be lubricated, nonlubricated, or tetrafluoroethylene resin-coated plug valves. In lieu of plug valves, ball valves may be used. Plug valves and ball valves 203 mm or larger shall be provided with manual gear operators with position indicators.In lieu of balancing valves specified where indicated, automatic flow control valves may be provided to maintain constant flow, and shall be designed to be sensitive to pressure differential across the valve to provide the required opening. Valves shall be selected for the flow required and provided with a permanent nameplate or tag carrying a permanent record of the factory-determined flow rate and flow control pressure levels. Valves shall control the flow within 5 percent of the tag rating. Valves shall be suitable for the maximum operating pressure of 861 kPa or 150 percent of the system operating pressure, whichever is the greater. Where the available system pressure is not adequate to provide the minimum pressure differential that still allows flow control, the system pump head capability shall be appropriately increased. Where flow readings are provided by remote or portable meters, valve bodies shall be provided with tapped openings

and pipe extensions with shutoff valves outside of pipe insulation. The pipe extensions shall be provided with quick connecting hose fittings for a portable meter to measure the pressure differential across the automatic flow control valve. A portable meter furnished with accessory kit as recommended by the automatic valve manufacturer shall be provided. Automatic flow control valve specified may be substituted for venturi tubes or orifice plate flow measuring devices.

2.5.5.7 Air Vents

Manual air vents shall be brass or bronze valves or cocks suitable for pressure rating of piping system and furnished with threaded plugs or caps. Automatic air vents shall be float type, cast iron, stainless steel, or forged steel construction, suitable for pressure rating of piping system.

2.5.6 Strainers

Strainer shall be in accordance with [ASTM F 1199] [ASTM F 1200], except as modified herein. Strainer shall be the cleanable, basket or "Y" type, the same size as the pipeline. The strainer bodies shall be fabricated of cast iron with bottoms drilled, and tapped. The bodies shall have arrows clearly cast on the sides indicating the direction of flow. Each strainer shall be equipped with removable cover and sediment screen. The screen shall be made of minimum 22 gauge [brass sheet,] [monel,] [corrosion-resistant steel,] with small perforations numbering not less than 400 per square inch to provide a net free area through the basket of at least 3,300 times that of the entering pipe. The flow shall be into the screen and out through the perforations.

2.5.7 Water Heating System Accessories

Water heating accessories such as expansion tanks shall be as specified in Section 15569 WATER HEATING; OIL, GAS OR BOTH; UP TO 20 MBTUH.

2.5.8 Not Used

2.5.9 Glycol

The glycol shall be tested according to ASTM D 1384 and shall cause less than 0.5 mils penetration per year for all system metals. The glycol shall contain corrosion inhibitors. Silicon based inhibitors shall not be used. The solution shall be compatible with all wetted items within the system.

2.5.10 Backflow Preventers

Backflow preventers shall be according to Section 15400 PLUMBING, GENERAL PURPOSE.

2.5.11 Flexible Pipe Connectors

Flexible pipe connectors shall be designed for 861 kPa or 1034 kPa service as appropriate for the static head plus the system head, and 110 degrees C for grooved end flexible connectors. The flexible section shall be constructed of rubber, tetrafluoroethylene resin, or corrosion-resisting steel, bronze, monel, or galvanized steel. The flexible section shall be suitable for intended service with end connections to match adjacent piping. Flanged assemblies shall be equipped with limit bolts to restrict maximum travel to the manufacturer's standard limits. Unless otherwise indicated, the length of the flexible connectors shall be as recommended by the manufacturer for the service intended. Internal sleeves or liners,

compatible with circulating medium, shall be provided when recommended by the manufacturer. Covers to protect the bellows shall be provided where indicated.

2.5.12 Pressure Gauges

Gauges shall conform to ASME B40.1 and shall be provided with throttling type needle valve or a pulsation dampener and shut-off valve. Gauge shall be a minimum of 89 mm in diameter and shall have a range from 0 kPa to approximately 1.5 times the maximum system working pressure.

2.5.13 Thermometers

Thermometers shall have brass, malleable iron, or aluminum alloy case and frame, clear protective face, permanently stabilized glass tube with indicating-fluid column, white face, black numbers, and a 229mm scale, and shall have rigid stems with straight, angular, or inclined pattern.

2.5.14 Escutcheons

Escutcheons shall be chromium-plated iron or chromium-plated brass, either one piece or split pattern, held in place by internal spring tension or setscrews.

2.5.15 Pipe Hangers, Inserts, and Supports

Pipe hangers, inserts, and supports shall conform to MSS SP-58 and MSS SP-69.

2.5.16 Expansion Joints

2.5.16.1 Slip Joints

Expansion joints shall provide for either single or double slip of the connected pipes, as required or indicated, and for not less than the traverse indicated. The joints shall be designed for working temperature and pressure suitable for the application, but not less than 1034 kPa, and shall be according to applicable requirements of EJMA-01 and ASME B31.1. End connections shall be flanged or beveled for welding as indicated. Joint shall be provided with an anchor base where required or indicated. Where adjoining pipe is carbon steel, the sliding slip shall be seamless steel plated with a minimum of 2 mils of hard chrome according to ASTM B 650. All joint components shall be suitable for the intended service. Initial setting shall be made according to the manufacturer's recommendations to compensate for ambient temperature at time of installation. Pipe alignment guides shall be installed as recommended by the joint manufacturer, but in any case shall be not more than 1.5 m from expansion joint except that in lines 102 mm or smaller, guides shall be installed not more than 0.61 m from the joint. Service outlets shall be provided where indicated.

2.5.16.2 Flexible Ball Joints

Flexible ball joints shall conform to EJMA-01 and ASME B31.1 and be constructed of alloys as appropriate for the service intended. Where so indicated, the ball joint shall be designed for packing injection under full line pressure to contain leakage. The joint ends shall be threaded to 52 mm only, grooved, flanged, or beveled for welding as indicated or required and shall be capable of absorbing a minimum of 15-degree angular flex and 360 degree rotation. Balls and sockets shall be suitable for the intended service. The exterior spherical surface of carbon steel balls shall be plated with mils of hard

chrome according to ASTM B 650. The ball type joints shall be designed and constructed according to EJMA-01 and ASME B31.1 where applicable. Where required, flanges shall conform to ASME B16.5.

2.5.16.3 Bellows Type Joints

Bellows type joints shall be flexible, guided expansion joints. The expansion element shall be stabilized corrosion resistant steel. Bellows type expansion joints shall conform to the applicable requirements of EJMA-01 with internal sleeves. Guiding of piping on both sides of expansion joint shall be according to the published recommendations of the manufacturer of the expansion joint. The joints shall be designed for the working temperature and pressure suitable for the application but not less than 1034 kPa.

2.5.17 Insulation

Shop and field applied insulation shall be as specified in Section 15080 THERMAL INSULATION FOR MECHANICAL SYSTEMS.

2.5.18 Condensate Drain Lines

Condensate drainage shall be provided for each item of equipment that generates condensate as specified for drain, waste, and vent piping systems in Section 15400 PLUMBING, GENERAL PURPOSE.

2.6 ELECTRICAL WORK

Electrical motor-driven equipment specified shall be provided complete with motor, motor starter, and controls. Unless otherwise specified, electric equipment, including wiring and motor efficiencies, shall be according to Section 16415 ELECTRICAL WORK, INTERIOR. Electrical characteristics and enclosure type shall be as shown. Unless otherwise indicated, motors of 1 hp and above shall be high efficiency type. Motor starters shall be provided complete with thermal overload protection and other appurtenances necessary. Each motor shall be according to NEMA MG 1 and shall be of sufficient size to drive the equipment at the specified capacity without exceeding the nameplate rating of the motor. Manual or automatic control and protective or signal devices required for the operation specified, and any control wiring required for controls and devices, but not shown, shall be provided. Where two-speed or variable-speed motors are indicated, solid-state variable-speed controller may be provided to accomplish the same function. Solid-state variable-speed controllers shall be utilized for motors rated 7.5 kW or less. Adjustable frequency drives shall be used for larger motors.

2.7 CONTROLS

Controls shall be provided as specified in Section 15951 DIRECT DIGITAL CONTROL FOR HVAC.

2.8 DUCTWORK COMPONENTS

2.8.1 Metal Ductwork

All aspects of metal ductwork construction, including all fittings and components, shall comply with SMACNA-06 unless otherwise specified. Elbows shall be radius type with a centerline radius of 1-1/2 times the width or diameter of the duct where space permits. Otherwise, elbows having a minimum radius equal to the width or diameter of the duct or square elbows with factory fabricated turning vanes may be used. Static pressure Class 1/2, 1, and 2 inch w.g. (.125kPa, .25kPa, .5kPa) ductwork shall

meet the requirements of Seal Class C. Class 3 through 254 mm shall meet the requirements of Seal Class A. Sealants shall conform to fire hazard classification specified in Section 15080 THERMAL INSULATION FOR MECHANICAL SYSTEMS. Pressure sensitive tape shall not be used as a sealant. Spiral lock seam duct, and flat oval shall be made with duct sealant and locked with not less than 3 equally spaced drive screws or other approved methods indicated in SMACNA-06. The sealant shall be applied to the exposed male part of the fitting collar so that the sealer will be on the inside of the joint and fully protected by the metal of the duct fitting. One brush coat of the sealant shall be applied over the outside of the joint to at least 52 mm band width covering all screw heads and joint gap. Dents in the male portion of the slip fitting collar will not be acceptable. Outdoor air intake ducts and plenums shall be fabricated with watertight soldered or brazed joints and seams.

2.8.1.1 Transitions

Diverging air flow transitions shall be made with each side pitched out a maximum of 15 degrees, for an included angle of 30 degrees. Transitions for converging air flow shall be made with each side pitched in a maximum of 30 degrees, for an included angle of 60 degrees, or shall be as indicated. Factory-fabricated reducing fittings for systems using round duct sections when formed to the shape of the ASME short flow nozzle, need not comply with the maximum angles specified.

2.8.1.2 Metallic Flexible Duct

Metallic type duct shall be single-ply galvanized steel self supporting to 2.4 m spans. Duct shall be of corrugated/interlocked, folded and knurled type seam construction, bendable without damage through 180 degrees with a throat radius equal to 1/2 duct diameter. Duct shall conform to UL 181 and shall be rated for positive or negative working pressure of 381 mm water gauge at 177 degrees C when duct is aluminum, and 343 degrees C when duct is galvanized steel or stainless steel.

2.8.1.3 Insulated Nonmetallic Flexible Duct Runouts

Flexible duct runouts shall be used only where indicated. Runout length shall be as shown on the drawings, but shall in no case exceed 3.05 m. Runouts shall be preinsulated, factory fabricated, and shall comply with NFPA 90A and UL 181. Either field or factory applied vapor barrier shall be provided. Where coil induction or high velocity units are supplied with vertical air inlets, a streamlined and vaned and mitered elbow transition piece shall be provided for connection to the flexible duct or hose. The last elbow to these units, other than the vertical air inlet type, shall be a die-stamped elbow and not a flexible connector. Insulated flexible connectors may be used as runouts. The insulated material and vapor barrier shall conform to the requirements of Section 15080 THERMAL INSULATION FOR MECHANICAL SYSTEMS. The insulation material surface shall not be exposed to the air stream.

2.8.1.4 General Service Duct Connectors

A flexible duct connector approximately 152 mm in width shall be provided where sheet metal connections are made to fans or where ducts of dissimilar metals are connected. For round/oval ducts, the flexible material shall be secured by stainless steel or zinc-coated, iron clinch-type draw bands. For rectangular ducts, the flexible material locked to metal collars shall be installed using normal duct construction methods. The composite connector system shall comply with UL 214 and be classified as "flame-retarded fabrics" in UL Bld Mat Dir.

2.8.2 Not Used.

2.8.3 Ductwork Accessories

2.8.3.1 Duct Access Doors

Access doors shall be provided in ductwork and plenums where indicated and at all air flow measuring primaries, automatic dampers, fire dampers, coils, thermostats, and other apparatus requiring service and inspection in the duct system, and unless otherwise shown, shall conform to SMACNA-06. Access doors shall be provided upstream and downstream of air flow measuring primaries and heating and cooling coils. Doors shall be minimum 381 x 457 mm, unless otherwise shown. Where duct size will not accommodate this size door, the doors shall be made as large as practicable. Doors 610 x 610 mm or larger shall be provided with fasteners operable from both sides. Doors in insulated ducts shall be the insulated type.

2.8.3.2 Fire Dampers

Fire dampers shall be 1-1/2 hour fire rated unless otherwise indicated. Fire dampers shall conform to the requirements of NFPA 90A and UL 555. Fire dampers shall be automatic operating type and shall have a dynamic rating suitable for the maximum air velocity and pressure differential to which it will be subjected. Fire dampers shall be approved for the specific application, and shall be installed according to their listing. Fire dampers shall be equipped with a steel sleeve or adequately sized frame installed in such a manner that disruption of the attached ductwork, if any, will not impair the operation of the damper. Sleeves or frames shall be equipped with perimeter mounting angles attached on both sides of the wall or floor opening. Ductwork in fire-rated floor-ceiling or roof-ceiling assembly systems with air ducts that pierce the ceiling of the assemblies shall be constructed in conformance with UL Fire Resist Dir. Fire dampers shall be curtain type with damper blades out of the air stream or single blade type or multi-blade type. Dampers shall not reduce the duct or the air transfer opening cross-sectional area. Dampers shall be installed so that the centerline of the damper depth or thickness is located in the centerline of the wall, partition or floor slab depth or thickness. Unless otherwise indicated, the installation details given in SMACNA-05 and in manufacturer's instructions for fire dampers shall be followed.

2.8.3.3 Splitters and Manual Balancing Dampers

Splitters and manual balancing dampers shall be furnished with accessible operating mechanisms. Where operators occur in finished portions of the building, operators shall be chromium plated with all exposed edges rounded. Splitters shall be operated by quadrant operators or 4.8 mm rod brought through the side of the duct with locking setscrew and bushing. Two rods are required on splitters over 203 mm. Manual volume control dampers shall be operated by locking-type quadrant operators. Dampers and splitters shall be 2 gauges heavier than the duct in which installed. Unless otherwise indicated, multileaf dampers shall be opposed blade type with maximum blade width of 305 mm. Access doors or panels shall be provided for all concealed damper operators and locking setscrews. Unless otherwise indicated, the locking-type quadrant operators for dampers, when installed on ducts to be thermally insulated, shall be provided with stand-off mounting brackets, bases, or adapters to provide clearance between the duct surface and the operator not less than the thickness of the insulation. Stand-off mounting items shall be integral with the operator or standard accessory of the damper manufacturer. Volume dampers shall be provided where indicated.

2.8.3.4 Air Deflectors and Branch Connections

Air deflectors shall be provided at duct mounted supply outlets, at takeoff or extension collars to supply outlets, at duct branch takeoff connections, and at 90 degree elbows, as well as at locations as indicated on the drawings or otherwise specified. Conical branch connections or 45 degree entry connections may be used in lieu of deflectors or extractors for branch connections. All air deflectors, except those installed in 90 degree elbows, shall be provided with an approved means of adjustment. Adjustment shall be made from easily accessible means inside the duct or from an adjustment with sturdy lock on the face of the duct. When installed on ducts to be thermally insulated, external adjustments shall be provided with stand-off mounting brackets, integral with the adjustment device, to provide clearance between the duct surface and the adjustment device not less than the thickness of the thermal insulation. Air deflectors shall be factory-fabricated units consisting of curved turning vanes or louver blades designed to provide uniform air distribution and change of direction with minimum turbulence or pressure loss. Air deflectors shall be factory or field assembled. Blade air deflectors, also called blade air extractors, shall be approved factory fabricated units consisting of equalizing grid and adjustable blade and lock. Adjustment shall be easily made from the face of the diffuser or by position adjustment and lock external to the duct. Stand-off brackets shall be provided on insulated ducts and are described herein. Fixed air deflectors, also called turning vanes, shall be provided in 90 degree elbows.

2.8.4 Duct Sleeves, Framed Prepared Openings, Closure Collars

2.8.4.1 Duct Sleeves

Duct sleeves shall be provided for round ducts 381 mm in diameter or less passing through floors, walls, ceilings, or roof, and installed during construction of the floor, wall, ceiling, or roof. Round ducts larger than 381 mm in diameter and square, rectangular, and oval ducts passing through floors, walls, ceilings, or roof shall be installed through framed prepared openings. The Contractor shall be responsible for the proper size and location of sleeves and prepared openings. Sleeves and framed openings are also required where grilles, registers, and diffusers are installed at the openings. Framed prepared openings shall be fabricated from 20 **gauge** galvanized steel, unless otherwise indicated. Where sleeves are installed in bearing walls or partitions, black steel pipe, ASTM A 53, Schedule 20 shall be used. Sleeve shall provide 25 mm clearance between the duct and the sleeve or 25 mm clearance between the insulation and the sleeve for insulated ducts.

2.8.4.2 Framed Prepared Openings

Openings shall have 25 mm clearance between the duct and the opening or 25 mm clearance between the insulation and the opening for insulated ducts.

2.8.4.3 Closure Collars

Collars shall be fabricated of galvanized sheet metal not less than 102 mm wide, unless otherwise indicated, and shall be installed on exposed ducts on each side of walls or floors where sleeves or prepared openings are provided. Collars shall be installed tight against surfaces. Collars shall fit snugly around the duct or insulation. Sharp edges of the collar around insulated duct shall be ground smooth to preclude tearing or puncturing the insulation covering or vapor barrier. Collars for round ducts 381 mm in diameter or less shall be fabricated from 20 **gauge** galvanized steel. Collars for round ducts larger than 381 mm and square, and rectangular ducts shall be fabricated from 18 **gauge** galvanized steel.

Collars shall be installed with fasteners on maximum 152 mm centers, except that not less than 4 fasteners shall be used.

2.8.5 Plenums and Casings for Field-Fabricated Units

2.8.5.1 Plenum and Casings

Plenums and casings shall be fabricated and erected as shown in SMACNA-06, as applicable. Unless otherwise indicated, system casing shall be constructed of not less than 16 gauge galvanized sheet steel. Cooling coil drain pans with 1 inch threaded outlet shall be provided to collect condensation from the cooling coils. Drain pans shall be fabricated of not lighter than 16 gauge steel, galvanized after fabrication or of 18 gauge corrosion-resisting sheet steel conforming to ASTM A 167, Type 304, welded and stiffened. Drain pans exposed to the atmosphere shall be thermally insulated to prevent condensation. Insulation shall be coated with a flame resistant waterproofing material. Separate drain pans shall be provided for each vertical coil section, and a separate drain line shall be provided for each pan. Pans shall be generously sized to ensure capture of entrained moisture on the downstream-air side of the coil. Openings in the casing, such as for piping connections, shall be sealed and covered to prevent air leakage. Water seal for the drain shall provide at least 2 inch water gauge greater than the maximum negative pressure in the coil space.

2.8.5.2 Casing

Casings shall be terminated at the curb line and anchored by the use of galvanized angle iron sealed and bolted to the curb, as indicated in SMACNA-06.

2.8.5.3 Access Doors

Access doors shall be provided in each section of the casing. Door frames shall be welded in place, and each door shall be neoprene gasketed, hinged with minimum of two brass hinges, and fastened with a minimum of two brass tension fasteners operable from inside and outside of the casing. Where possible, doors shall be 920mm x 460mm located 460mm above the floor. Where the space available will not accommodate doors of this size, doors as large as the space will accommodate shall be provided. Doors shall swing so that fan suction or pressure holds door in closed position, and shall be airtight. A push-button station to stop the supply fan shall be located inside the casing where indicated.

2.8.5.4 Factory-Fabricated Insulated Sheet Metal Panels

Factory-fabricated components may be used for field-assembled units, provided all requirements specified for field-fabricated plenums and casings are met. Panels shall be of modular design, pretested for structural strength, thermal control, condensation control, and acoustical control. Panel joints shall be sealed and insulated access doors shall be provided and gasketed to prevent air leakage. Panel construction shall be not less than 20 gauge galvanized sheet steel and shall be assembled with fasteners treated against corrosion. Standard length panels shall deflect not more than 12mm under operation. Details of construction, including joint sealing, not specifically covered shall be as indicated in SMACNA-06. The plenums and casings shall be constructed to withstand the specified internal pressure of the air systems.

2.8.5.5 Duct Liner

Unless otherwise specified, duct liner shall conform to ASTM C 1071, Type I or II.

2.8.6 Sound Attenuation Equipment

a. (Not Used).

b. System With Total Pressure of 1 kPa and Lower:

Sound attenuators shall be provided only where indicated, or in lieu of lined ducts. Factory fabricated sound attenuators shall be constructed of galvanized steel sheets. Outer casing shall be not less than 22 gauge. Acoustical fill shall be fibrous glass. Net sound reduction shall be as indicated. Values shall be obtained on a test unit not less than 610 mm by 610 mm outside dimensions made by a certified nationally recognized independent acoustical laboratory. Air flow capacity shall be as indicated or required. Pressure drop through the attenuator shall not exceed the value indicated, or shall not be in excess of 15 percent of the total external static pressure of the air handling system, whichever is less. Sound attenuators shall be acoustically tested with metal duct inlet and outlet sections while under the rated air flow conditions. Noise reduction data shall include the effects of flanking paths and vibration transmission. Sound attenuators shall be constructed to be airtight when operating at the internal static pressure indicated or specified for the duct system, but in no case less than 498 Pa.

c. Acoustical Duct Liner:

Acoustical duct lining shall be fibrous glass designed exclusively for lining ductwork and shall conform to the requirements of ASTM C 1071, Type I and II. Liner composition may be uniform density, graduated density, or dual density, as standard with the manufacturer. Lining shall be coated, not less than 25 mm thick. Where acoustical duct liner is used, liner or combination of liner and insulation applied to the exterior of the ductwork shall be the thermal equivalent of the insulation specified in Section 15080 THERMAL INSULATION FOR MECHANICAL SYSTEMS. Duct sizes shown shall be increased to compensate for the thickness of the lining used. In lieu of sheet metal duct with field-applied acoustical lining, acoustically equivalent lengths of fibrous glass duct or factory fabricated double-walled internally insulated duct with perforated liner may be provided. Net insertion loss value, static pressure drop, and air flow velocity capacity data shall be certified by a nationally recognized independent acoustical laboratory.

2.8.7 Diffusers, Registers, and Grilles

Units shall be factory-fabricated of steel, corrosion-resistant steel, or aluminum and shall distribute the specified quantity of air evenly over space intended without causing noticeable drafts, air movement faster than 0.25 m/s in occupied zone, or dead spots anywhere in the conditioned area. Outlets for diffusion, spread, throw, and noise level shall be as required for specified performance. Performance shall be certified according to ASHRAE 70. Inlets and outlets shall be sound rated and certified according to ASHRAE 70. Sound power level shall be as indicated. Diffusers and registers shall be provided with volume damper with accessible operator, unless otherwise indicated; or if standard with the manufacturer, an automatically controlled device will be acceptable. Volume dampers shall be opposed blade type for all diffusers and registers, except linear slot diffusers. Linear slot diffusers shall be provided with round or elliptical balancing dampers. Where the inlet and outlet openings are located less than 2.15 m above the floor, they shall be protected by a grille or screen according to NFPA 90A.

2.8.7.1 Diffusers

Diffuser types shall be as indicated. Ceiling mounted units shall be furnished with anti-smudge devices, unless the diffuser unit minimizes ceiling smudging through design features. Diffusers shall be provided with air deflectors of the type indicated. Air handling troffers or combination light and ceiling diffusers shall conform to the requirements of UL Elec Const Dir for the interchangeable use as cooled or heated air supply diffusers or return air units. Ceiling mounted units shall be installed with rims tight against ceiling. Sponge rubber gaskets shall be provided between ceiling and surface mounted diffusers for air leakage control. Suitable trim shall be provided for flush mounted diffusers. Duct collar connecting the duct to diffuser shall be airtight and shall not interfere with volume controller. Return or exhaust units shall be similar to supply diffusers.

2.8.7.2 Registers and Grilles

Units shall be four-way directional-control type, except that return and exhaust registers may be fixed horizontal or vertical louver type similar in appearance to the supply register face. Registers shall be provided with sponge-rubber gasket between flanges and wall or ceiling. Wall supply registers shall be installed at least 152 mm below the ceiling unless otherwise indicated. Return and exhaust registers shall be located 6 inches above the floor unless otherwise indicated. Four-way directional control may be achieved by a grille face which can be rotated in 4 positions or by adjustment of horizontal and vertical vanes. Grilles shall be as specified for registers, without volume control damper.

2.8.8 Louvers

Louvers for installation in exterior walls which are associated with the air supply and distribution system shall be as specified in Section 07600 SHEET METALWORK, GENERAL.

2.8.9 Air Vents, Penthouses, and Goosenecks

Air vents, penthouses, and goosenecks shall be fabricated from galvanized steel or aluminum sheets with galvanized or aluminum structural shapes. Sheet metal thickness, reinforcement, and fabrication shall conform to SMACNA-06. Louver blades shall be accurately fitted and secured to frames. Edges of louver blades shall be folded or beaded for rigidity and baffled to exclude driving rain. Air vents, penthouses, and goosenecks shall be provided with bird screen.

2.8.10 Bird Screens and Frames

Bird screens shall conform to ASTM E 437, Type I, Class 1, 2 by 2 mesh, 0.6 mm diameter aluminum wire or 0.79 mm diameter stainless steel wire. Frames shall be removable type or stainless steel or extruded aluminum.

2.9 AIR SYSTEMS EQUIPMENT

2.9.1 Fans

Fans shall be tested and rated according to AMCA ANSI/AMCA 210. Fans may be connected to the motors either directly or indirectly with V-belt drive. V-belt drives shall be designed for not less than 150percent of the connected driving capacity. Motor sheaves shall be variable pitch for 11.2 kW and

below and fixed pitch as defined by ARI Guideline D. Variable pitch sheaves shall be selected to drive the fan at a speed which will produce the specified capacity when set at the approximate midpoint of the sheave adjustment. When fixed pitch sheaves are furnished, a replaceable sheave shall be provided when needed to achieve system air balance. Motors for V-belt drives shall be provided with adjustable rails or bases. Removable metal guards shall be provided for all exposed V-belt drives, and speed-test openings shall be provided at the center of all rotating shafts. Fans shall be provided with personnel screens or guards on both suction and supply ends, except that the screens need not be provided, unless otherwise indicated, where ducts are connected to the fan. Fan and motor assemblies shall be provided with vibration-isolation supports or mountings as indicated. Vibration-isolation units shall be standard products with published loading ratings. Each fan shall be selected to produce the capacity required at the fan static pressure indicated. Sound power level shall be as indicated. The sound power level values shall be obtained according to AMCA 300. Standard AMCA arrangement, rotation, and discharge shall be as indicated.

2.9.1.1 Centrifugal Fans

Centrifugal fans shall be fully enclosed, single-width single-inlet, or double-width double-inlet, AMCA Pressure Class I, II, or III as required or indicated for the design system pressure. Impeller wheels shall be rigidly constructed, accurately balanced both statically and dynamically. Fan blades may be forward curved, backward-inclined or airfoil design in wheel sizes up to 762 mm. Fan blades for wheels over 762 mm in diameter shall be backward-inclined or airfoil design. Booster fans for exhaust dryer systems shall be the open-wheel radial type. These fans shall be suitable for conveying lint and the temperatures encountered. The fan shaft shall be provided with a heat slinger to dissipate heat buildup along the shaft. An access (service) door to facilitate maintenance shall be supplied with these fans. Fan wheels over 914 mm in diameter shall have overhung pulleys and a bearing on each side of the wheel. Fan wheels 914 mm or less in diameter may have one or more extra long bearings between the fan wheel and the drive. Bearings shall be sleeve type, self-aligning and self-oiling with oil reservoirs, or precision self-aligning roller or ball-type with accessible grease fittings or permanently lubricated type. Grease fittings shall be connected to tubing and serviceable from a single accessible point. Bearing life shall be L50 rated at not less than 200,000 hours as defined by ABEMA Std 9 and ABEMA Std 11. Fan shafts shall be steel, accurately finished, and shall be provided with key seats and keys for impeller hubs and fan pulleys. Each fan outlet shall be of ample proportions and shall be designed for the attachment of angles and bolts for attaching flexible connections. Motors, unless otherwise indicated, shall not exceed 1800 rpm and shall have dripproof enclosures. Motor starters shall be magnetic across-the-line type with general-purpose enclosure unless otherwise specified. Remote manual switch with pilot indicating light shall be provided where indicated.

2.9.1.2 In-Line Centrifugal Fans

In-line fans shall have centrifugal backward inclined blades, stationary discharge conversion vanes, internal and external belt guards, and adjustable motor mounts. Fans shall be mounted in a welded tubular casing. Air shall enter and leave the fan axially. Inlets shall be streamlined with conversion vanes to eliminate turbulence and provide smooth discharge air flow. Fan bearings and drive shafts shall be enclosed and isolated from the air stream. Fan bearings shall be sealed against dust and dirt and shall be permanently lubricated, and shall be precision self aligning ball or roller type. Bearing life shall be L50 rated at not less than 200,000 hours as defined by ABEMA Std 9 and ABEMA Std 11. Motors shall have open enclosure. Motor starters shall be magnetic across-the-line with general-purpose enclosures unless otherwise specified. Remote manual switch with pilot indicating light shall be provided where indicated.

2.9.1.3 Panel Type Power Wall Ventilators

Fans shall be propeller type, assembled on a reinforced metal panel with venturi opening spun into panel. Fans shall be direct driven. Fans shall be furnished with wall mounting collar. Unit housing shall be designed for sealing to building surface and for discharge and condensate drippage away from building surface. Unit shall be fitted with an **aluminum or plated steel wire discharge bird screen, anodized aluminum or stainless steel wall grille, manufacturer's standard motor-operated damper, an airtight and liquid-tight metallic wall sleeve.** Lubricated bearings shall be provided. Fans shall be fitted with wheel and motor side metal or wire guards which have a corrosion-resistant finish. Motor enclosure shall be dripproof type. Motor operated dampers shall be provided.

2.9.2 Coils

Coils shall be fin-and-tube type constructed of seamless coppertubes and aluminum or copper fins mechanically bonded or soldered to the tubes. Copper tube wall thickness shall be a minimum of 0.406 mm. . Aluminum fins shall be 0.14 mm minimum thickness. Copper fins shall be 0.114 mm minimum thickness. Casing and tube support sheets shall be not lighter than 16 gauge galvanized steel, formed to provide structural strength. When required, multiple tube supports shall be provided to prevent tube sag. Each coil shall be tested at the factory under water at not less than 2.76 MPa air pressure and shall be suitable for 1.38 MPa working pressure. Coils shall be mounted for counterflow service. Coils shall be rated and certified according to ARI ANSI/ARI 410.

2.9.2.1 Water Coils

Water coils shall be installed with a pitch of not less than 10.4 mm per m of the tube length toward the drain end. Headers shall be constructed of cast iron, welded steel or copper. Each coil shall be provided with a plugged vent and drain connection extending through the unit casing.

2.9.3 Air Filters

Air filters shall be listed according to requirements of UL 900, except high efficiency particulate air filters of 99.97 percent efficiency by the DOP Test method shall be as listed under the Label Service and shall meet the requirements of UL 586.

2.9.3.1 Not Used.

2.9.3.2 Replaceable Media Filters

Replaceable media filters shall be the dry-media type, of the size required to suit the application. Filtering media shall be not less than 50mm thick fibrous glass media pad supported by a structural wire grid or woven wire mesh. Pad shall be enclosed in a holding frame of not less than 16 gauge galvanized steel, and equipped with quick-opening mechanism for changing filter media. The air flow capacity of the filter shall be based on net filter face velocity not exceeding 2 meters/second, with initial resistance of 0.032 kPa. Average efficiency shall be not less than 30 percent when tested according to ASHRAE 52.1.

2.9.3.3 Holding Frames

Frames shall be fabricated from not lighter than 16 gauge sheet steel with rust-inhibitor coating. Each holding frame shall be equipped with suitable filter holding devices. Holding frame seats shall be gasketed. All joints shall be airtight.

2.9.3.4 Filter Gauges

Filter gauges shall be dial type, diaphragm actuated draft and shall be provided for all filter stations, including those filters which are furnished as integral parts of factory fabricated air handling units. Gauges shall be at least 98 mm in diameter, shall have white dials with black figures, and shall be graduated in 0.25 mm, and shall have a minimum range of 25 mm beyond the specified final resistance for the filter bank on which each gauge is applied. Each gauge shall incorporate a screw operated zero adjustment and shall be furnished complete with two static pressure tips with integral compression fittings, two molded plastic vent valves, two 1.5 m minimum lengths of 6.35 mm diameter aluminum or vinyl tubing, and all hardware and accessories for gauge mounting.

2.10 AIR HANDLING UNITS

2.10.1 Field-Fabricated Air Handling Units

Built-up units shall be as specified in paragraph DUCTWORK COMPONENTS. Fans, coils spray-coil dehumidifiers, and air filters shall be as specified in paragraph AIR SYSTEMS EQUIPMENT for types indicated.

2.10.2 Factory-Fabricated Air Handling Units

Units shall be **draw-through type**. **Units shall include** fans, coils, airtight insulated casing, filter sections, adjustable V-belt drives, belt guards for externally mounted motors, access sections where indicated, mixing box or combination sectional filter-mixing box, vibration-isolators, and appurtenances required for specified operation. Vibration isolators shall be provided per manufacturer's standard. Each air handling unit shall have physical dimensions suitable to fit space allotted to the unit and shall have the capacity indicated. Air handling unit shall have published ratings based on tests performed according to ARI ANSI/ARI 430.

2.10.2.1 Casings

Casing sections shall be single constructed of a minimum 18 gauge galvanized steel, or 18 gauge steel outer casing protected with a corrosion resistant paint finish according to paragraph FACTORY PAINTING. Casing shall be designed and constructed with an integral structural steel frame such that exterior panels are non-load bearing. Exterior panels shall be individually removable. Removal shall not affect the structural integrity of the unit. Casings shall be provided with inspection doors, access sections, and access doors as indicated. Inspection and access doors shall be insulated, fully gasketed, double-wall type, of a minimum 18 outer and 20 gauge inner panels. Doors shall be rigid and provided with heavy duty hinges and latches. Inspection doors shall be a minimum 305 mm wide by 305 mm high. Access doors shall be minimum 610 mm wide and shall be the full height of the unit casing or a minimum of 1.8 m., whichever is less. Access Sections shall be according to paragraph AIR HANDLING UNITS. Duct liner material, coating, and adhesive shall conform to fire-hazard requirements specified in Section 15080 THERMAL INSULATION FOR MECHANICAL SYSTEMS.

Exposed insulation edges and joints where insulation panels are butted together shall be protected with a metal nosing strip or shall be coated to conform to meet erosion resistance requirements of ASTM C 1071. A latched and hinged inspection door, shall be provided in the fan and coil sections. Additional inspection doors, access doors and access sections shall be provided where indicated.

2.10.2.2 Heating Coils

Coils shall be provided as specified in paragraph AIR SYSTEMS EQUIPMENT, for types indicated.

2.10.2.3 Air Filters

Air filters shall be as specified in paragraph AIR SYSTEMS EQUIPMENT for types and thickness indicated.

2.10.2.4 Fans

Fans shall be double-inlet, centrifugal type with each fan in a separate scroll. Fans and shafts shall be dynamically balanced prior to installation into air handling unit, then the entire fan assembly shall be statically and dynamically balanced at the factory after it has been installed in the air handling unit. Fans shall be mounted on steel shafts accurately ground and finished. Fan bearings shall be sealed against dust and dirt and shall be precision self-aligning ball or roller type. Bearing life shall be L50 rated at not less than 200,000 hours as defined by ABEMA Std 9 and ABEMA Std 11. Bearings shall be permanently lubricated or lubricated type with lubrication fittings readily accessible at the drive side of the unit. Bearings shall be supported by structural shapes, or die formed sheet structural members, or support plates securely attached to the unit casing. Bearings may not be fastened directly to the unit sheet metal casing. Fans and scrolls shall be furnished with coating indicated. Fans shall be driven by a unit-mounted or a floor-mounted motor connected to fans by V-belt drive complete with belt guard for externally mounted motors. Belt guards shall be the three sided enclosed type with solid or expanded metal face. Belt drives shall be designed for not less than a 1.3 service factor based on motor nameplate rating. Motor sheaves shall be variable pitch for 18.65 kW and below and fixed pitch above 18.65 kW as defined by ARI Guideline D. Where fixed sheaves are required, variable pitch sheaves may be used during air balance, but shall be replaced with an appropriate fixed sheave after air balance is completed. Variable pitch sheaves shall be selected to drive the fan at a speed that will produce the specified capacity when set at the approximate midpoint of the sheave adjustment. Motors for V-belt drives shall be provided with adjustable bases. Fan motors shall have open enclosures. Motor starters shall be magnetic or across-the-line type with general-purpose enclosure. Unit fan or fans shall be selected to produce the required capacity at the fan static pressure. Sound power level shall be as indicated. The sound power level values shall be obtained according to AMCA 300 or ASHRAE ANSI/ASHRAE 68.

2.10.2.5 Access Sections and Filter/Mixing Boxes

Access sections shall be provided where indicated and shall be furnished with access doors as shown. Access sections and filter/mixing boxes shall be constructed in a manner identical to the remainder of the unit casing and shall be equipped with access doors. Mixing boxes shall be designed to minimize air stratification and to promote thorough mixing of the air streams.

2.10.2.6 Dampers

Dampers shall be as specified in paragraph CONTROLS.

2.11 FAN COIL UNITS (HV-3)

2.11.1 Fan-Coil Units

Base units shall include galvanized coil casing, coil assembly drain pan valve and piping package, outside air damper, mixing box, air filter, fans, motor, fan drive, motor switch, and casing. Leveling devices integral with the unit shall be provided for vertical type units. Sound power level data or values for these units shall be obtained according to test procedures based on ARI 350. Automatic valves and controls shall be provided as specified in paragraph CONTROLS. Unit shall be fastened securely to the building structure. Capacity of the unit shall be as indicated. Room fan-coil units shall be certified as complying with ARI ANSI/ARI 440, and shall meet the requirements of UL 1995.

2.11.1.1 Enclosures

Enclosures shall be fabricated of not lighter than 18 gauge steel, reinforced and braced. Front panels of enclosures shall be removable and provided with 1/2 inch thick dual density fibrous glass insulation. The exposed side shall be high density, erosion-proof material suitable for use in air streams with velocities up to 4,500 fpm. Ferrous metal surfaces shall be galvanized or factory finished with corrosion resistant enamel. Access doors or removable panels shall be provided for piping and control compartments. Duct discharge collar shall be provided for concealed models. Enclosures shall have easy access for filter replacement.

2.11.1.2 Fans

Fans shall be galvanized steel or aluminum, multiblade, centrifugal type. In lieu of metal, fans and scrolls may be non-metallic materials of suitably reinforced compounds. Fans shall be dynamically and statically balanced. Surfaces shall be smooth. Assemblies shall be accessible for maintenance. Disassembly and re-assembly shall be by means of mechanical fastening devices and not by epoxies or cements.

2.11.1.3 Coils

Coils shall be constructed of not less than 3/8 inch outside diameter seamless copper tubing, with copper or aluminum fins mechanically bonded or soldered to the tubes. Coils shall be provided with not less than 1/2 inch outside diameter flare or sweat connectors, accessory piping package with thermal connections suitable for connection to the type of control valve supplied, and manual air vent. Coils shall be tested hydrostatically at 300 psi or under water at 250 psi air pressure and suitable for 200 psi working pressure. Provisions shall be made for coil removal.

2.11.1.4 Drain Pans

Drain and drip pans shall be sized and located to collect all water condensed on and dripping from any item within the unit enclosure or casing. Drain pans shall be constructed of not lighter than 21 gauge steel, galvanized after fabrication, thermally insulated to prevent condensation. Insulation shall have a flame spread rating not over 25 without evidence of continued progressive combustion, a smoke developed rating no higher than 50, and shall be of a waterproof type or coated with a waterproofing material. In lieu of the above, drain pans may be constructed of die-formed 22 gauge steel, formed from a single sheet, galvanized after fabrication, insulated and coated as specified for the 21 gauge material or

of die-formed 21 gauge type 304 stainless steel, insulated as specified above. Drain pans shall be pitched to drain. Minimum 3/4 inch NPT or 5/8 inch OD drain connection shall be provided in drain pan. Auxiliary drain pans to catch drips from control and piping packages, eliminating insulation of the packages, may be plastic; if metal, the auxiliary pans shall comply with the requirements specified above. Insulation at control and piping connections thereto shall extend 1 inch minimum over the auxiliary drain pan.

2.11.1.5 Manually Operated Outside Air Dampers

Manually operated outside air dampers shall be provided according to the arrangement indicated. Dampers shall be parallel airfoil type and of galvanized construction. Blades shall rotate on stainless steel or nylon sleeve bearings.

2.11.1.6 Filters

Filters shall be of the fiberglass disposable type, 1 inch thick, conforming to CID A-A-1419. Filters in each unit shall be removable without the use of tools.

2.11.1.7 Motors

Motors shall be of the permanent split-capacitor type with built-in thermal overload protection, directly connected to unit fans. Motor switch shall be two or three speeds and off, manually operated, and shall be mounted on an identified plate adjacent to the room thermostat. In lieu of the above fan speed control, a solid-state variable-speed controller having a minimum speed reduction of 50 percent may be provided. Motors shall have permanently-lubricated or oilable sleeve-type or combination ball and sleeve-type bearings with vibration isolating mountings suitable for continuous duty.

2.11.2 Coil Induction Units

Base unit shall include air plenums, air-discharge nozzles, air discharge grilles, recirculation grilles, valve and piping package, adjustable air-balancing dampers, and casing for concealed models. Each unit shall be selected to produce not less than the capacity indicated without exceeding the indicated static pressure. Automatic valves and controls shall be provided as specified in paragraph CONTROLS. Each unit shall be secured to the building structure. Capacity of the units shall be as indicated. The induction units shall conform to the provisions of ARI 445.

2.11.2.1 Enclosures

Enclosures shall be fabricated of not lighter than 18 gauge steel, reinforced and braced. Discharge grilles shall properly distribute air throughout the conditioned space. Plastic discharge and return grilles are not acceptable. Access doors shall be provided for all piping and control compartments.

2.11.2.2 Air Plenums

Plenums shall be fabricated of galvanized steel with interior acoustically baffled and lined with sound absorbing material that will attenuate the sound power from the primary air supply to the room. Heat-resistant nozzles shall be integral with or attached airtight to the plenum. Where coil induction units are supplied with vertical runouts, a streamlined, vaned, mitered elbow transition piece shall be provided for

connection between the unit and ductwork. An adjustable air-balancing damper shall be provided in each unit.

2.11.2.3 Coils

Coils shall be constructed of not less than 10mm outside diameter seamless copper tubing, with copper or aluminum fins, mechanically bonded or soldered to the tubes. Coil connections shall be provided with not less than 12mm outside diameter flare or sweat connectors, accessory piping package with terminal connections suitable for connection to the type of control valve supplied, and manual air vent. Coils shall be tested hydrostatically at 2068kPa or under water at 1724kPa air pressure and shall be suitable for 1379kPa working pressure.

2.11.2.4 Screens

Lint screens or throwaway filters shall be provided for each unit and shall be easily accessible.

2.12 ENERGY RECOVERY ROTORY WHEEL

Unit shall be a factory fabricated and tested assembly for air-to-air energy recovery by transfer of sensible heat from exhaust air to supply air stream. Device performance shall be according to ASHRAE 84. Device shall deliver an energy transfer effectiveness of not less than 70 percent with cross-contamination not in excess of **0.1** percent of exhaust airflow rate at system design differential pressure, including purging sector if provided with wheel. Exchange media shall be chemically inert, moisture-resistant, fire-retardant, laminated, nonmetallic material which complies with NFPA 90A. Exhaust and supply streams shall be isolated by seals which are static, field adjustable, and replaceable. Chain drive mechanisms shall be fitted with ratcheting torque limiter or slip-clutch protective device. Enclosure shall be fabricated from galvanized steel and shall include maintenance access provisions.

2.13 FACTORY PAINTING

Units which are not of galvanized construction according to ASTM A 123 or ASTM A 924/A 924M shall be factory painted with a corrosion resisting paint finish. Internal and external ferrous metal surfaces shall be cleaned, phosphatized and coated with a paint finish which has been tested according to ASTM B 117, ASTM D 1654, and ASTM D 3359. Evidence of satisfactory paint performance for a minimum of 125 hours for units to be installed indoors and 500 hours for units to be installed outdoors shall be submitted. Rating of failure at the scribe mark shall be not less than 6, average creepage not greater than 3.2 mm. Rating of the inscribed area shall not be less than 10, no failure. On units constructed of galvanized steel which have been welded, exterior surfaces of welds or welds that have burned through from the interior shall receive a final shop docket of zinc-rich protective paint according to ASTM D 520 Type I.

PART 3 EXECUTION

3.1 INSTALLATION

Work shall be installed as shown and according to the manufacturer's diagrams and recommendations.

3.1.1 Piping

Pipe and fitting installation shall conform to the requirements of ASME B31.1. Pipe shall be cut accurately to measurements established at the jobsite, and worked into place without springing or forcing, completely clearing all windows, doors, and other openings. Cutting or other weakening of the building structure to facilitate piping installation will not be permitted without written approval. Pipe or tubing shall be cut square, shall have burrs removed by reaming, and shall permit free expansion and contraction without causing damage to the building structure, pipe, joints, or hangers. Changes in direction shall be made with fittings, except that bending of pipe 102 mm and smaller will be permitted, provided a pipe bender is used and wide sweep bends are formed. The centerline radius of bends shall not be less than 6 diameters of the pipe. Bent pipe showing kinks, wrinkles, flattening, or other malformations will not be accepted. Horizontal supply mains shall pitch down in the direction of flow as indicated. The grade shall be not less than 25 mm in 12.2 m. Reducing fittings shall be used for changes in pipe sizes. Open ends of pipelines and equipment shall be capped or plugged during installation to keep dirt or other foreign materials out of the system. Pipe not otherwise specified shall be uncoated. Connections to appliances shall be made with malleable iron unions for steel pipe 63.5 or less in diameter, and with flanges for pipe 76 mm and larger. Connections between ferrous and copper piping shall be electrically isolated from each other with dielectric unions or flanges. All piping located in air plenums shall conform to NFPA 90A requirements. Pipe and fittings installed in inaccessible conduits or trenches under concrete floor slabs shall be welded.

3.1.1.1 Joints

a. Threaded Joints: Threaded joints shall be made with tapered threads and made tight with a stiff mixture of graphite and oil or polytetrafluoroethylene tape or equivalent thread joint compound or material, applied to the male threads only.

b. Soldered Joints: Joints in copper tubing shall be cut square with ends reamed, and all filings and dust wiped from interior of pipe. Joints shall be soldered with 95/5 solder or brazed with silver solder applied and drawn through the full fitting length. Care shall be taken to prevent annealing of tube or fittings when making connections. Joints 63.5 mm and larger shall be made with heat uniformly around the entire circumference of the joint with a multi-flame torch. Connections in floor slabs shall be brazed. Excess solder shall be wiped from joint before solder hardens. Solder flux shall be liquid or paste form, non-corrosive and conform to ASTM B 813.

c. Welded Joints: Welding shall be according to qualified procedures using qualified welders and welding operators. Procedures and welders shall be qualified according to ASME BPV IX. Welding procedures qualified by others and welders and welding operators qualified by another operator may be permitted by ASME B31.1. Structural members shall be welded according to Section 05055 WELDING, STRUCTURAL. All welds shall be permanently identified by imprinting the welder's or welding operator's assigned symbol adjacent to the weld. Welded joints shall be fusion welded unless otherwise required. Changes in direction of piping shall be made with welding fittings only; mitering or notching pipe to form elbows and tees or other similar type construction will not be permitted. Branch connections may be made with either welding tees or branch outlet fittings. Branch outlet fittings shall be forged, flared for improvement of flow where attached to the run, and reinforced against external strains. Beveling, alignment, heat treatment and inspection of weld shall conform to ASME B31.1. Weld defects shall be removed and repairs made to the weld, or the weld joints shall

be entirely removed and rewelded. Electrodes shall be stored and dried according to AWS D1.1 or as recommended by the manufacturer. Electrodes that have been wetted or that have lost any of their coating shall not be used.

3.1.1.2 **Grooved Mechanical Joints**

Grooves shall be prepared according to the coupling manufacturer's instructions. Pipe and groove dimensions shall comply with the tolerances specified by the coupling manufacturer. The diameter of grooves made in the field shall be measured using a "go/no-go" gauge, vernier or dial caliper, or narrow-land micrometer. Groove width and dimension of groove from end of pipe shall be measured and recorded for each change in grooving tool setup to verify compliance with coupling manufacturer's tolerances. Grooved joints shall not be used in concealed locations.

3.1.1.3 Flanges and Unions

Except where copper tubing is used, union or flanged joints shall be provided in each line immediately preceding the connection to each piece of equipment or material requiring maintenance such as coils, pumps, control valves, and other similar items.

3.1.2 Supports

3.1.2.1 General

Hangers used to support piping 52 mm and larger shall be fabricated to permit adequate adjustment after erection while still supporting the load. Pipe guides and anchors shall be installed to keep pipes in accurate alignment, to direct the expansion movement, and to prevent buckling, swaying, and undue strain. Piping subjected to vertical movement when operating temperatures exceed ambient temperatures shall be supported by variable spring hangers and supports or by constant support hangers.

3.1.2.2 Seismic Requirements (Pipe Supports and Structural Bracing)

Piping and attached valves shall be supported and braced to resist seismic loads as specified under Section 13080 SEISMIC PROTECTION FOR MECHANICAL, ELECTRICAL EQUIPMENT. Structural steel required for reinforcement to properly support piping, headers, and equipment but not shown shall be provided under this section. Material used for support shall be as specified under Section 05210 STEEL JOISTS.

3.1.2.3 Pipe Hangers, Inserts and Supports

Pipe hangers, inserts, and supports shall conform to MSS SP-58 and MSS SP-69, except as modified herein. Types 5, 12, and 26 shall not be used.

a. Hangers: Type 3 shall not be used on insulated piping.

b. Inserts: Type 18 inserts shall be secured to concrete forms before concrete is placed. Continuous inserts which allow more adjustment may be used if they otherwise meet the requirements for Type 18 inserts.

c. C-Clamps: Type 19 and 23 C-clamps shall be torqued per MSS SP-69 and have both locknuts and retaining devices, furnished by the manufacturer. Field-fabricated C-clamp bodies or retaining devices are not acceptable.

d. Angle Attachments: Type 20 attachments used on angles and channels shall be furnished with an added malleable-iron heel plate or adapter.

e. Hangers: Type 24 may be used only on trapeze hanger systems or on fabricated frames.

f. Type 39 saddles shall be used on all insulated pipe 4 inches and larger when the temperature of the medium is above 60 degrees F. Type 39 saddles shall be welded to the pipe.

g. Type 40 shields shall:

(1) be used on all insulated pipes less than 102 mm.

(2) be used on all insulated pipes 102 mm and larger when the temperature of the medium is 60 degrees or less.

(3) have a high density insert for pipe 52 mm and larger, and for smaller pipe when the insulation shows signs of being visibly compressed, or when the insulation or jacket shows visible signs of distortion at or near the type 40 shield. High density inserts shall have a density of **9 pcf** or greater.

h. Horizontal Pipe Supports: Horizontal pipe supports shall be spaced as specified in MSS SP-69 and a support shall be installed not over 304.8 mm from the pipe fitting joint at each change in direction of the piping. Pipe supports shall be spaced not over 1.5 m apart at valves. Pipe hanger loads suspended from steel joist with hanger loads between panel points in excess of 22.7 kg shall have the excess hanger loads suspended from panel points.

i. Vertical Pipe Supports: Vertical pipe shall be supported at each floor, except at slab-on-grade, and at intervals of not more than 4.57 m, not more than 2.44 m from end of risers, and at vent terminations.

j. Pipe Guides: Type 35 guides using steel reinforced polytetrafluoroethylene (PTFE) or graphite slides shall be provided where required to allow longitudinal pipe movement. Lateral restraints shall be provided as required. Slide materials shall be suitable for the system operating temperatures, atmospheric conditions, and bearing loads encountered.

k. Steel Slides: Where steel slides do not require provisions for restraint of lateral movement, an alternate guide method may be used. On piping 102 mm and larger with medium 15.5 degrees C or greater, a Type 39 saddle may be welded to the pipe and freely rest on a steel plate. On piping under 102 mm, a Type 40 protection shield may be attached to the pipe or insulation and freely rest on a steel slide plate.

l. High Temperature Guides with Cradles: Where there are high system temperatures and welding to piping is not desirable, the Type 35 guide shall include a pipe cradle, welded to the guide structure and strapped securely to the pipe. The pipe shall be separated from the slide

material by at least102 mm, or by an amount adequate for the insulation, whichever is greater.

m. Insulated Pipe: Insulation on horizontal pipe shall be continuous through hangers for hot and cold piping. Other requirements on insulated pipe are specified in Section 15080 THERMAL INSULATION FOR MECHANICAL SYSTEMS.

3.1.3 Anchors

Anchors shall be provided wherever necessary or indicated to localize expansion or to prevent undue strain on piping. Anchors shall consist of heavy steel collars with lugs and bolts for clamping and attaching anchor braces, unless otherwise indicated. Anchor braces shall be installed in the most effective manner to secure the desired results using turnbuckles where required. Supports, anchors, or stays shall not be attached where they will injure the structure or adjacent construction during installation or by the weight of expansion of the pipeline.

3.1.4 Pipe Sleeves

Sleeves shall not be installed in structural members except where indicated or approved. Rectangular and square openings shall be as detailed. Each sleeve shall extend through its respective wall, floor, or roof, and shall be cut flush with each surface. Pipes passing through concrete or masonry wall or concrete floors or roofs shall be provided with pipe sleeves fitted into place at the time of construction. Unless otherwise indicated, sleeves shall provide a minimum of 6.3 mm inch all-around clearance between bare pipe and sleeves or between jacket over insulation and sleeves. Sleeves in bearing walls, waterproofing membrane floors, and wet areas shall be steel pipe or cast iron pipe. Sleeves in non-bearing walls, floors, or ceilings may be steel pipe, cast iron pipe, galvanized sheet metal with lock-type longitudinal seam and of the metal thickness indicated, or moisture resistant fiber or plastic. Except in pipe chases or interior walls, the annular space between pipe and sleeve or between jacket over insulation and sleeve, in non-fire rated walls, shall be sealed as indicated and specified in Section 07900 JOINT SEALING. Pipes passing through wall waterproofing membrane shall be sleeved as specified above, and a waterproofing clamping flange shall be installed as indicated.

3.1.4.1 Roof and Floor Sleeves

Pipes passing through roof or floor waterproofing membrane shall be installed through a 481 g copper sleeve or a 0.8 mm thick aluminum sleeve, each within an integral skirt or flange. Flashing sleeve shall be suitably formed, and skirt or flange shall extend not less than 203 mm from the pipe and shall be set over the roof or floor membrane in a troweled coating of bituminous cement. Unless otherwise shown, the flashing sleeve shall extend up the pipe a minimum of 52 mm above highest floor level or a minimum of 254 mm above the roof. The annular space between the flashing sleeve and the bare pipe or between the flashing sleeve and the metal-jacket-covered insulation shall be sealed as indicated. Pipes up to and including 254 mm in diameter passing through roof or floor waterproofing membrane may be installed through a cast iron sleeve with caulking recess, anchor lugs, flashing clamp device, and pressure ring with brass bolts. Waterproofing membrane shall be clamped into place and sealant shall be placed in the caulking recess. In lieu of a waterproofing clamping flange and caulking and sealing of annular space between pipe and sleeve or conduit and sleeve, a modular mechanical type sealing assembly may be installed. Seals shall consist of interlocking synthetic rubber links shaped to continuously fill the annular space between the pipe/conduit and sleeve with corrosion protected carbon steel bolts, nuts, and pressure plates. Links shall be loosely assembled with bolts to form a continuous rubber belt around the pipe

with a pressure plate under each bolt head and each nut. After the seal assembly is properly positioned in the sleeve, tightening of the bolt shall cause the rubber sealing elements to expand and provide a watertight seal between the pipe/conduit and the sleeve. Each seal assembly shall be sized as recommended by the manufacturer to fit the pipe/conduit and sleeve involved.

3.1.4.2 Fire Seal

Where pipes pass through firewalls, fire partitions, or floors, a fire seal shall be provided as specified in Section 07840 FIRESTOPPING.

3.1.4.3 Escutcheons

Escutcheons shall be provided at finished surfaces where exposed piping, bare or insulated, passes through floors, walls, or ceilings except in boiler, utility, or equipment rooms. Where sleeves project slightly from floors, special deep-type escutcheons shall be used. Escutcheons shall be secured to pipe or pipe covering.

3.1.5 Not Used.

3.1.6 Pipe-Alignment Guides

Pipe-alignment guides shall be provided where indicated for expansion loops, offsets, and bends and as recommended by the manufacturer for expansion joints, not to exceed 1.5 m on each side of each expansion joint, and in lines 102 mm or smaller not more than 0.61 m on each side of the joint.

3.1.7 Air Vents and Drains

3.1.7.1 Vents

Air vents shall be provided at high points, on water coils, and where indicated to ensure adequate venting of the piping system.

3.1.7.2 Drains

Drains shall be provided at low points and where indicated to ensure complete drainage of the piping. Drains shall be accessible, and shall consist of nipples and caps or plugged tees unless otherwise indicated.

3.1.8 Valves

Isolation gate or ball valves shall be installed on each side of each piece of equipment such as pumps, heaters, heating or cooling coils, and other similar items, at the midpoint of all looped mains, and at any other points indicated or required for draining, isolating, or sectionalizing purposes. Isolation valves may be omitted where balancing cocks are installed to provide both balancing and isolation functions. Each valve except check valves shall be identified. Valves in horizontal lines shall be installed with stems horizontal or above.

3.1.9 Equipment and Installation

Frames and supports shall be provided for tanks, compressors, pumps, valves, air handling units, fans, coils, dampers, and other similar items requiring supports. Air handling units shall be floor mounted or ceiling hung, as indicated. The method of anchoring and fastening shall be as detailed. Floor-mounted equipment, unless otherwise indicated, shall be set on not less than 152 concrete pads or curbs doweled in place. Concrete foundations for circulating pumps shall be heavy enough to minimize the intensity of the vibrations transmitted to the piping and the surrounding structure, as recommended in writing by the pump manufacturer. In lieu of a concrete pad foundation, a concrete pedestal block with isolators placed between the pedestal block and the floor may be provided. The concrete foundation or concrete pedestal block shall be of a mass not less than three times the weight of the components to be supported. Lines connected to the pump mounted on pedestal blocks shall be provided with flexible connectors. Foundation drawings, bolt-setting information, and foundation bolts shall be furnished prior to concrete foundation construction for all equipment indicated or required to have concrete foundations. Concrete for foundations shall be as specified in Section 03300 CAST-IN-PLACE STRUCTURAL CONCRETE.

3.1.10 Access Panels

Access panels shall be provided for concealed valves, vents, controls, dampers, and items requiring inspection or maintenance. Access panels shall be of sufficient size and located so that the concealed items may be serviced and maintained or completely removed and replaced. Access panels shall be as specified in Section 05500 MISCELLANEOUS METALS.

3.1.11 Flexible Connectors

Pre-insulated flexible connectors and flexible duct shall be attached to other components in accordance with the latest printed instructions of the manufacturer to ensure a vapor tight joint. Hangers, when required to suspend the connectors, shall be of the type recommended by the connector or duct manufacturer and shall be provided at the intervals recommended.

3.1.12 Sleeved and Framed Openings

Space between the sleeved or framed opening and the duct or the duct insulation shall be packed as specified in Section 07840 FIRESTOPPING for fire rated penetrations. For non-fire rated penetrations, the space shall be packed as specified in Section 07900 JOINT SEALING.

3.1.13 Metal Ductwork

Installation shall be according to SMACNA-06 unless otherwise indicated. Duct supports for sheet metal ductwork shall be according to SMACNA-06, unless otherwise specified. Friction beam clamps indicated in SMACNA-06 shall not be used. Risers on high velocity ducts shall be anchored in the center of the vertical run to allow ends of riser to move due to thermal expansion. Supports on the risers shall allow free vertical movement of the duct. Supports shall be attached only to structural framing members and concrete slabs. Supports shall not be anchored to metal decking unless a means is provided and approved for preventing the anchor from puncturing the metal decking. Where supports are required between structural framing members, suitable intermediate metal framing shall be provided. Where C-clamps are used, retainer clips shall be provided.

3.1.14 Acoustical Duct Lining

Lining shall be applied in cut-to-size pieces attached to the interior of the duct with nonflammable fire resistant adhesive conforming to ASTM C 916, Type I, NFPA 90A, UL 723, and ASTM E 84. Top and bottom pieces shall lap the side pieces and shall be secured with welded pins, adhered clips of metal, nylon, or high impact plastic, and speed washers or welding cup-head pins installed according to SMACNA-06. Welded pins, cup-head pins, or adhered clips shall not distort the duct, burn through, nor mar the finish or the surface of the duct. Pins and washers shall be flush with the surfaces of the duct liner and all breaks and punctures of the duct liner coating shall be sealed with the nonflammable, fire resistant adhesive. Exposed edges of the liner at the duct ends and at other joints where the lining will be subject to erosion shall be coated with a heavy brush coat of the nonflammable, fire resistant adhesive, to prevent delamination of glass fibers. Duct liner may be applied to flat sheet metal prior to forming duct through the sheet metal brake. Lining at the top and bottom surfaces of the duct shall be additionally secured by welded pins or adhered clips as specified for cut-to-size pieces. Other methods indicated in SMACNA-06 to obtain proper installation of duct liners in sheet metal ducts, including adhesives and fasteners, will be acceptable.

3.1.15 Dust Control

To prevent the accumulation of dust, debris and foreign material during construction, temporary dust control protection shall be provided. The distribution system (supply and return) shall be protected with temporary seal-offs at all inlets and outlets at the end of each day's work. Temporary protection shall remain in place until system is ready for startup.

3.1.16 Insulation

Thickness and application of insulation materials for ductwork, piping, and equipment shall be according to Section 15080 THERMAL INSULATION FOR MECHANICAL SYSTEMS. Outdoor air intake ducts and plenums shall be externally insulated up to the point where the outdoor air reaches the conditioning unit.

3.1.17 Duct Test Holes

Holes with closures or threaded holes with plugs shall be provided in ducts and plenums as indicated or where necessary for the use of pitot tube in balancing the air system. Extensions, complete with cap or plug, shall be provided where the ducts are insulated.

3.1.18 Power Transmission Components Adjustment

V-belts and sheaves shall be tested for proper alignment and tension prior to operation and after 72 hours of operation at final speed. Belts on drive side shall be uniformly loaded, not bouncing. Alignment of direct driven couplings shall be to within 50 percent of manufacturer's maximum allowable range of misalignment.

3.2 FIELD PAINTING AND PIPING IDENTIFICATION

Finish painting of items only primed at the factory or surfaces not specifically noted otherwise and identification for piping are specified in Section 09900 PAINTING, GENERAL.

3.3 PIPING HYDROSTATIC TEST

After cleaning, water piping shall be hydrostatically tested at a pressure equal to 150 percent of the total system operating pressure for period of time sufficient to inspect every joint in the system and in no case less than 2 hours. Leaks shall be repaired and piping retested until test is successful. No loss of pressure will be allowed. Leaks shall be repaired by re-welding or replacing pipe or fittings. Caulking of joints will not be permitted. Concealed and insulated piping shall be tested in place before covering or concealing.

3.4 DUCTWORK LEAK TEST

Ductwork leak test shall be performed for the entire air distribution and exhaust system, including fans, coils, filters, etc. designated as static pressure Class 747 Pa through Class 2.49 kPa. Test procedure, apparatus, and report shall conform to SMACNA-10. Ductwork leak test shall be completed with satisfactory results prior to applying insulation to ductwork exterior.

3.5 CLEANING AND ADJUSTING

Pipes shall be cleaned free of scale and thoroughly flushed of foreign matter. A temporary bypass shall be provided for water coils to prevent flushing water from passing through coils. Strainers and valves shall be thoroughly cleaned. Prior to testing and balancing, air shall be removed from water systems by operating the air vents. Temporary measures, such as piping the overflow from vents to a collecting vessel shall be taken to avoid water damage during the venting process. Air vents shall be plugged or capped after the system has been vented. Inside of room fan-coil units, coil-induction units, ducts, plenums, and casing shall be thoroughly cleaned of debris and blown free of small particles of rubbish and dust and then shall be vacuum cleaned before installing outlet faces. Equipment shall be wiped clean, with traces of oil, dust, dirt, or paint spots removed. Temporary filters shall be provided prior to startup of all fans that are operated during construction, and new filters shall be installed after all construction dirt has been removed from the building, and the ducts, plenums, casings, and other items specified have been vacuum cleaned. System shall be maintained in this clean condition until final acceptance. Bearings shall be properly lubricated with oil or grease as recommended by the manufacturer. Belts shall be tightened to proper tension. Control valves and other miscellaneous equipment requiring adjustment shall be adjusted to setting indicated or directed. Fans shall be adjusted to the speed indicated by the manufacturer to meet specified conditions.

3.6 TESTING, ADJUSTING, AND BALANCING

Testing, adjusting, and balancing shall be as specified in Section 15990 TESTING, ADJUSTING AND BALANCING OF HVAC SYSTEMS. Testing, adjusting, and balancing shall begin only when the air supply and distribution, including controls, has been completed, with the exception of performance tests.

3.7 PERFORMANCE TESTS

After testing, adjusting, and balancing has been completed as specified, each system shall be tested as a whole to see that all items perform as integral parts of the system and temperatures and conditions are evenly controlled throughout the building. Corrections and adjustments shall be made as necessary to produce the conditions indicated or specified. Capacity tests and general operating tests shall be conducted by an experienced engineer. Tests shall cover a period of not less than one day for each system and shall demonstrate that the entire system is functioning according to the specifications.

Coincidental chart recordings shall be made at points indicated on the drawings for the duration of the time period and shall record the temperature at space thermostats or space sensors, the humidity at space humidistats or space sensors and the ambient temperature and humidity in a shaded and weather protected area.

3.8 FIELD TRAINING

The Contractor shall conduct a training course for operating and maintenance personnel as designated by the Contracting Officer. Training shall be provided for a period of 16 hours of normal working time and shall start after the system is functionally complete but prior to the performance tests. The field instruction shall cover all of the items contained in the approved Operating and Maintenance Instructions.

END OF SECTION

This page intentionally blank

SECTION 15951

DIRECT DIGITAL CONTROL FOR HVAC

PART 1 GENERAL

1.1 REFERENCES

The publications listed below form a part of this specification to the extent referenced. The publications are referred to in the text by basic designation only.

AIR MOVEMENT AND CONTROL ASSOCIATION (AMCA)

AMCA 500	(1994) Test Methods for Louvers, Dampers and Shutters

AMERICAN NATIONAL STANDARDS INSTITUTE (ANSI)

ANSI C12.1	(1995) Code for Electricity Metering

AMERICAN SOCIETY FOR TESTING AND MATERIALS (ASTM)

ASTM A 269	(1996) Seamless and Welded Austenitic Stainless Steel Tubing for General Service
ASTM B 88	(1996) Seamless Copper Water Tube
ASTM B 88M	(1996) Seamless Copper Water Tube (Metric)
ASTM D 635	(1996) Rate of Burning and/or Extent and Time of Burning of Self-Supporting Plastics in a Horizontal Position
ASTM D 1693	(1995) Environmental Stress-Cracking of Ethylene Plastics

AMERICAN SOCIETY OF HEATING, REFRIGERATING AND AIR-CONDITIONING ENGINEERS (ASHRAE)

AMERICAN SOCIETY OF MECHANICAL ENGINEERS (ASME)

ASME B16.34	(1996) Valves - Flanged, Threaded, and Welding End
ASME B40.1	(1991) Gauges - Pressure Indicating Dial Type - Elastic Element
ASME BPV VIII Div I	(1998) Boiler and Pressure Vessel Code; Section VIII, Pressure Vessels Division 1 - Basic Coverage

ELECTRONIC INDUSTRIES ASSOCIATION (EIA)

EIA ANSI/EIA/TIA 232-E	(1991) Interface Between Data Technical Equipment and Data Circuit-Terminating Equipment Employing Serial Binary Data Interchange

INSTITUTE OF ELECTRICAL AND ELECTRONICS ENGINEERS (IEEE)

IEEE C62.41	(1991; R 1995) Surge Voltages in Low-Voltage AC Power Circuits
IEEE Std 142	(1991) IEEE Recommended Practice for Grounding of Industrial and Commercial Power Systems

INSTRUMENT SOCIETY OF AMERICA (ISA)

ISA S7.0.01	(1975; R 1981) Quality Standard for Instrument Air

NATIONAL ELECTRICAL MANUFACTURERS ASSOCIATION (NEMA)

NEMA 250	(1991) Enclosures for Electrical Equipment (1000 Volts Maximum)
NEMA ICS 1	(1993) Industrial Control and Systems
NEMA ST 1	(1988) Specialty Transformers (Exept General-Purpose Type)

NATIONAL FIRE PROTECTION ASSOCIATION (NFPA)

NFPA 70	(1996; Errata 96-4) National Electrical Code
NFPA 90A	(1996) Installation of Air Conditioning and Ventilating Systems

UNDERWRITERS LABORATORIES (UL)

UL 94	(1996; Rev thru Jul 1997) Tests for Flammability of Plastic Materials for Parts in Devices and Appliances
UL 268A	(1993; Rev thru May 1997) Smoke Detectors for Duct Application
UL 508	(1993; Rev thru Oct 1997) Industrial Control Equipment
UL 555S	(1996) Leakage Rated Dampers for Use in Smoke Control Systems

1.2 GENERAL REQUIREMENTS

The direct digital control (DDC) shall be a complete system suitable for the heating, ventilating and air-conditioning (HVAC) system.

1.2.1 Nameplates, Lens Caps, and Tags

Nameplates and lens caps bearing legends as shown and tags bearing device-unique identifiers as shown shall have engraved or stamped characters. A plastic or metal tag shall be mechanically attached directly to each device or attached by a metal chain or wire. Each airflow measurement station shall have a tag showing flow rate range for signal output range, duct size, and identifier as shown.

1.2.2 Verification of Dimensions

After becoming familiar with all details of the work, the Contractor shall verify all dimensions in the field, and shall advise the Contracting Officer of any discrepancy before performing any work.

1.2.3 Drawings

Because of the small scale of the drawings, it is not possible to indicate all offsets, fittings, and accessories that may be required. The Contractor shall carefully investigate the mechanical, electrical, and finish conditions that could affect the work to be performed, shall arrange such work accordingly, and shall furnish all work necessary to meet such conditions.

1.2.4 Power-Line Surge Protection

Equipment connected to ac circuits shall be protected from power-line surges. Equipment protection shall meet the requirements of IEEE C62.41. Fuses shall not be used for surge protection.

1.2.5 Surge Protection for Transmitter and Control Wiring

DDC system control-panel equipment shall be protected against surges induced on control and transmitter wiring installed outside and as shown. The equipment protection shall be tested in the normal mode and in the common mode, using the following two waveforms:

a. A 10-microsecond by 1,000-microsecond waveform with a peak voltage of 1,500 volts and a peak current of 60 amperes.

b. An eight microsecond by 20-microsecond waveform with a peak voltage of 1,000 volts and a peak current of 500 amperes.

1.2.6 System Overall Reliability Requirement

The system shall be configured and installed to yield a mean time between failure (MTBF) of at least 40,000 hours. Each DDC controller shall be designed, configured, installed and programmed to provide for stand alone operation with minimal performance degradation on failure of other system components to which it is connected or with which it communicates.

1.2.7 DDC System Network Accessibility

Where the systems to be controlled by the DDC system are located in multiple mechanical rooms, each mechanical room shall have at least one communication port for the portable workstation/tester. DDC controllers shall be located in the same room as the equipment being controlled or in an adjacent space which has direct access to the equipment room.

1.2.8 System Accuracy and Display

The system shall maintain an end-to-end accuracy for one year from sensor to operator's console display for the applications specified and shall display the value as specified. Each temperature shall be displayed and printed to nearest **0.1 degree C**.

1.2.8.1 Space Temperature

Space temperature with a range of 10 to 29 degees C plus or minus 0.75 degree C for conditioned space; 0 to 54 degees C plus or minus 1 degree C for unconditioned space.

1.2.8.2 Duct Temperature

Duct temperature with a range of 44 to 60 degees C plus or minus 2 degees C.

1.2.8.3 Outside Air Temperature

Outside air (OA) temperature with a range of minus minus 1 to plus 54 degees C plus or minus 2 degees C; with a subrange of to 37.8 degees C plus or minus 1 degree C.

1.2.8.4 Water Temperature

Water temperature with a range of 0 to 37.8 degees C plus or minus 0.75 degree C; the range of 37.8 to 121 degees C plus or minus 2 degees C; and water temperatures for the purpose of performing kJ calculations using differential temperatures to plus or minus 0.5 degree C using matched sensors.

1.2.8.5 High Temperature

High temperature with a range of 93 to 260 degees C plus or minus 2.0 degees C.

1.2.8.6 Relative Humidity

Relative humidity, within a range of 20 to 80 percent, plus or minus 6.0 percent of range (display and print to nearest 1.0 percent).

1.2.8.7 Pressure

Pressure with a range for the specific application plus or minus 2.0 percent of range (display and print to nearest Pa.)

1.2.8.8 Flow

Flow with a range for the specific application plus or minus 3.0 percent of range, and flows for the purpose of thermal calculations to plus or minus 2.0 percent of actual flow (display and print to nearest unit, such as L/s).

1.2.8.9 KWh and kW Demand

KWh and kW demand with a range for the specific application plus or minus 1.0 percent of reading (display and print to nearest kWh or kW).

1.2.8.10 Analog Value Input

An analog value input to the system's equipment via an AI with a maximum error of 0.50 percent of range, not including the sensor or transmitter error. This accuracy shall be maintained over the specified environmental conditions.

1.3 SUBMITTALS

Government approval is required for submittals with a "GA" designation; submittals having an "FIO" designation are for information only. The following shall be submitted in accordance with Section 01330 SUBMITTAL PROCEDURES:

SD-01 Data

Equipment Compliance Booklet; GA

The HVAC Control System Equipment Compliance Booklet (ECB) shall be in booklet form and indexed, with numbered tabs separating the information on each device. It shall consist of, but not be limited to, data sheets and catalog cuts which document compliance of all devices and components with the specifications. The ECB shall be indexed in alphabetical order by the unique identifiers. Devices and components which do not have unique identifiers shall follow the devices and components with unique identifiers and shall be indexed in alphabetical order according to their functional name. The ECB shall include a Bill of Materials for each HVAC Control System. The Bill of Materials shall function as the Table of Contents for the ECB and shall include the device's unique identifier, device function, manufacturer, model/part/catalog number used for ordering, and tab number where the device information is located in the ECB. The ECB shall be submitted along with Submittal SD-04, Drawings.

SD-04 Drawings

HVAC Control System;GA.

Drawings shall be on 864 by 559 mm sheets in the form and arrangement shown. The drawings shall use the same abbreviations, symbols, nomenclature and identifiers shown. Each control system element on a drawing shall have a unique identifier as shown. The HVAC Control System Drawings shall be delivered together as a complete submittal. Deviations must be approved by the Contracting Officer. Drawings shall be submitted along with Submittal SD-01, Data.

a. HVAC Control System Drawings shall include the following:

Sheet One: Drawing Index, HVAC Control System Legend.
Sheet Two: Valve Schedule, Damper Schedule.
Sheet Three: Compressed Air Station Schematic.
Sheet Four: Control System Schematic and Equipment Schedule.
Sheet Five: Sequence of Operation and Data Terminal Strip Layout.
Sheet Six: Control Loop Wiring Diagrams.
Sheet Seven: Motor Starter and Relay Wiring Diagram.
Sheet Eight: Communication Network and Block Diagram.
Sheet Nine: DDC Panel Installation and Block Diagram.

(Repeat Sheets Four through Seven for each AHU System.)

b. The HVAC Control System Drawing Index shall show the name and number of the building, military site, State or other similar designation, and Country. The Drawing Index shall list HVAC Control System Drawings, including the drawing number, sheet number, drawing title, and computer filename when used. The HVAC Control System Legend shall show generic symbols and the name of devices shown on the HVAC Control System Drawings.

c. The valve schedule shall include each valve's unique identifier, size, flow coefficient Cv, pressure drop at specified flow rate, spring range, positive positioner range, actuator size, close-off pressure data, dimensions, and access and clearance requirements data. Valve schedules may be submitted in advance but shall be included in the complete submittal.

d. The damper schedule shall contain each damper's and each actuator's identifier, nominal and actual sizes, orientation of axis and frame, direction of blade rotation, spring ranges, operation rate, positive positioner ranges, locations of actuators and damper end switches, arrangement of sections in multi-section dampers, and methods of connecting dampers, actuators, and linkages. The Damper Schedule shall include the maximum leakage rate at the operating static-pressure differential. The Damper Schedule shall contain actuator selection data supported by calculations of the torque required to move and seal the dampers, access and clearance requirements. Damper schedules may be submitted in advance but shall be included in the complete submittal.

e. The compressed air station schematic diagram shall show all equipment, including: compressor with motor horsepower and voltage; starter; isolators; manual bypasses; tubing sizes; drain piping and drain traps; reducing valves; dryer; and data on manufacturer's names and model numbers, mounting, access, and clearance requirements. Air Compressor and air dryer data shall include calculations of the air consumption of all current-to-pneumatic transducers and of any other control system devices to be connected to the compressed air station, and the compressed air supply dewpoint temperature at 138 kPa. Compressed air station schematic drawings shall be submitted for each compressed air station.

f. The HVAC control system schematics shall be in the form shown, and shall show all control and mechanical devices associated with the HVAC system. A system schematic drawing shall be submitted for each HVAC system.

g. The HVAC control system equipment Schedule shall be in the form shown. All devices shown on the drawings having unique identifiers shall be referenced in the equipment schedule. Information to be included in the equipment schedule shall be the control loop, device unique identifier, device function,

setpoint, input range, and additional important parameters (i.e., output range). An equipment schedule shall be submitted for each HVAC system.

h. The HVAC control system sequence of operation shall reflect the language and format of this specification, and shall refer to the devices by their unique identifiers as shown. No operational deviations from specified sequences will be permitted without prior written approval of the Contracting Officer. Sequences of operation shall be submitted for each HVAC control system including each type of terminal unit control system.

i. The HVAC control system wiring diagrams shall be functional wiring diagrams which show the interconnection of conductors and cables to HVAC control panel terminal blocks and to the identified terminals of devices, starters and package equipment. The wiring diagrams shall show necessary jumpers and ground connections. The wiring diagrams shall show the labels of all conductors. Sources of power required for HVAC control systems and for packaged equipment control systems shall be identified back to the panel board circuit breaker number, HVAC system control panel, magnetic starter, or packaged equipment control circuit. Each power supply and transformer not integral to a controller, starter, or packaged equipment shall be shown. The connected volt-ampere load and the power supply volt-ampere rating shall be shown. Wiring diagrams shall be submitted for each HVAC control system.

SD-08 Statements

Commissioning Procedures; FIO.

Six copies of the HVAC control system commissioning procedures, in booklet form and indexed, 60 days prior to the scheduled start of commissioning. Commissioning procedures shall be provided for each HVAC control system, and for each type of terminal unit control system. The Commissioning procedures shall reflect the format and language of this specification, and refer to devices by their unique identifiers as shown. The Commissioning procedures shall be specific for each HVAC system, and shall give detailed step-by-step procedures for commissioning of the system.

a. The Commissioning procedures shall include detailed, product specific set-up procedures, configuration procedures, adjustment procedures, and calibration procedures for each device. Where the detailed product specific commissioning procedures are included in manufacturer supplied manuals, reference may be made in the HVAC control system commissioning procedures to the manuals.

b. An HVAC control system commissioning procedures equipment list shall be included that lists the equipment to be used to accomplish commissioning. The list shall include manufacturer name, model number, equipment function, the date of the latest calibration, and the results of the latest calibration.

Performance Verification Test Procedures; FIO

Six copies of the HVAC Control System Performance Verification Test Procedures, in booklet form and indexed, 60 days before the Contractor's scheduled test dates. The performance verification test procedures shall refer to the devices by their unique identifiers as shown, shall explain, step-by-step, the actions and expected results that will demonstrate that the HVAC control system performs in accordance with the sequences of operation, and other contract documents. An HVAC control system performance verification test equipment list shall be included that lists the equipment to be used during performance verification testing. The list shall include manufacturer name, model number, equipment function, the date of the latest calibration, and the results of the latest calibration.

Training Course Materials; FIO

An outline for the HVAC control system training course with a proposed time schedule. Approval of the planned training schedule shall be obtained from the Government at least 60 days prior to the start of the training. Six copies of HVAC control system training course material 30 days prior to the scheduled start of the training course. The training course material shall include the operation manual, maintenance and repair manual, and paper copies of overheads used in the course.

SD-09 Reports

Commissioning Report; FIO

Six copies of the HVAC Control System Commissioning Report, in booklet form and indexed, within 30 days after completion of the system commissioning. The commissioning report shall include data collected during the HVAC control system commissioning procedures and shall follow the format of the commissioning procedures. The commissioning report shall include all configuration checksheets with final values listed for all parameters, setpoints, P, I, D setting constants, calibration data for all devices, results of adjustments, and results of testing.

Performance Verification Test Report; FIO.

Six copies of the HVAC Control System Performance Verification Test Report, in booklet form and indexed, within 30 days after completion of the test. The HVAC control system performance verification test report shall include data collected during the HVAC control system performance verification test. The original copies of all data gathered during the performance verification test shall be turned over to the Government after Government approval of the test results.

SD-13 Certificates

ASME Air-Storage Tank Certificate; FIO.

An ASME Air-Storage Tank Certificate for each storage tank.

SD-18 Records

Service Organizations; FIO.

Six copies of a list of service organizations qualified to service the HVAC control system. The list shall include the service organization name, address, technical point of contact and telephone number, and contractual point of contact and telephone number.

SD-19 Operation and Maintenance Manuals

Operation Manual; GA. Maintenance and Repair Manual; GA.

Six copies of the HVAC Control System Operation Manual and HVAC Control System Maintenance and Repair Manual, for each HVAC control system, 30 days before the date scheduled for the training course.

1.4 DELIVERY AND STORAGE

Products shall be stored with protection from the weather, humidity and temperature variations, dirt and dust, and other contaminants, within the storage condition limits published by the equipment manufacturer. Dampers shall be stored so that seal integrity, blade alignment and frame alignment are maintained.

1.5 OPERATION MANUAL

An HVAC control system operation manual in indexed booklet form shall be provided for each HVAC control system. The operation manual shall include the HVAC control system sequence of operation, and procedures for the HVAC system start-up, operation and shut-down. The operation manual shall include as-built HVAC control system detail drawings. The operation manual shall include the as-built configuration checksheets, the procedures for changing HVAC control system setpoints, and the procedures for placing HVAC system controllers in the manual control mode.

a. The procedures for changing HVAC control system setpoints shall describe the step-by-step procedures required to change the process variable setpoints, the alarm setpoints, the bias settings, and setpoint reset schedules.

b. The procedures for placing HVAC system controllers in the manual control mode shall describe step-by-step procedures required to obtain manual control of each controlled device and to manually adjust their positions.

1.6 MAINTENANCE AND REPAIR MANUAL

An HVAC control system maintenance and repair manual in indexed booklet form in hardback binders shall be provided for each HVAC control system. The maintenance and repair manual shall include the routine maintenance checklist, a recommended repair methods list, a list of recommended maintenance and repair tools, the qualified service organization list, the as-built commissioning procedures and report, the as-built performance verification test procedures and report, and the as-built equipment data booklet.

a. The routine maintenance checklist shall be arranged in a columnar format. The first column shall list all devices listed in the equipment compliance booklet, the second column shall state the maintenance activity or state no maintenance required, the third column shall state the frequency of the maintenance activity, and the fourth column for additional comments or reference.

b. The recommended repair methods list shall be arranged in a columnar format and shall list all devices in the equipment data compliance booklet and state the guidance on recommended repair methods, either field repair, factory repair, or whole-item replacement.

c. The as-built equipment data booklet shall include the equipment compliance booklet and manufacturer supplied user manuals and information.

d. If the operation manual and the maintenance and repair manual are provided in a common volume, they shall be clearly differentiated and separately indexed.

1.7 MAINTENANCE AND SERVICE

Services, materials and equipment shall be provided as necessary to maintain the entire system in an operational state as specified for a period of one year after successful completion and acceptance of the Performance Verification Test. Impacts on facility operations shall be minimized.

1.7.1 Description of Work

The adjustment and repair of the system shall include the manufacturer's required adjustments of computer equipment, software updates, transmission equipment and instrumentation and control devices.

1.7.2 Personnel

Service personnel shall be qualified to accomplish work promptly and satisfactorily. The Government shall be advised in writing of the name of the designated service representative, and of any changes in personnel.

1.7.3 Scheduled Inspections

Two inspections shall be performed at six-month intervals (or less if required by the manufacturer), and all work required shall be performed. Inspections shall be scheduled in June and December. These inspections shall include:

a. Visual checks and operational tests of equipment.

b. Fan checks and filter changes for control system equipment.

c. Clean control system equipment including interior and exterior surfaces.

d. Check and calibrate each field device. Check and calibrate 50 percent of the total analog points during the first inspection. Check and calibrate the remaining 50 percent of the analog points during the second major inspection. Certify analog test instrumentation accuracy to be twice that of the device being calibrated. Randomly check at least 25 percent of all digital points for proper operation during the first inspection. Randomly check at least 25 percent of the remaining digital points during the second inspection.

e. Run system software diagnostics and correct diagnosed problems.

f. Resolve any previous outstanding problems.

1.7.4 Scheduled Work

This work shall be performed during regular working hours, Monday through Friday, excluding legal holidays.

1.7.5 Emergency Service

The Government will initiate service calls when the system is not functioning properly. Qualified personnel shall be available to provide service to the system. A telephone number where the service

supervisor can be reached at all times shall be provided. Service personnel shall be at the site within 24 hours after receiving a request for service. The control system shall be restored to proper operating condition within three calendar days after receiving a request for service.

1.7.6 Operation

Scheduled adjustments and repairs shall include verification of the control system operation as demonstrated by the applicable tests of the performance verification test.

1.7.7 Records and Logs

Dated records and logs shall be kept of each task, with cumulative records for each major component, and for the complete system chronologically. A continuous log shall be maintained for all devices. The log shall contain initial analog span and zero calibration values and digital points. Complete logs shall be kept and shall be available for inspection onsite, demonstrating that planned and systematic adjustments and repairs have been accomplished for the control system.

1.7.8 Work Requests

Each service call request shall be recorded as received and shall include the serial number identifying the component involved, its location, date and time the call was received, nature of trouble, names of the service personnel assigned to the task, instructions describing what has to be done, the amount and nature of the materials to be used, the time and date work started, and the time and date of completion. A record of the work performed shall be submitted within 5 days after work is accomplished.

1.7.9 System Modifications

Recommendations for system modification shall be submitted in writing. No system modifications, including operating parameters and control settings, shall be made without prior approval of the Government. Any modifications made to the system shall be incorporated into the operations and maintenance manuals, and other documentation affected.

1.7.10 Software

Updates to the software shall be provided for system, operating and application software, and operation in the system shall be verified. Updates shall be incorporated into operations and maintenance manuals, and software documentation. There shall be at least one scheduled update near the end of the first year's warranty period, at which time the latest released version of the Contractor's software shall be installed and validated.

1.8 FACTORY TESTING

The Contractor shall assemble the factory test DDC system as specified and shall perform test to demonstrate that the performance of the system satisfies the requirements of this specification. Model numbers of equipment tested shall be identical to those to be delivered to the site. Original copies of data produced, including results of each test procedure during factory testing shall be delivered to the Government at the conclusion of testing, prior to Government approval of the test. The test results documentation shall be arranged so that commands, responses, and data acquired are correlated in a manner which will allow for logical interpretation of the data.

1.8.1 Factory Test Setup

The factory test setup shall include the following:

a. Central workstation/tester.

b. Printer.

c. DDC test set.

d. Portable workstation/tester.

e. Communication links of each type and speed including MODEMs.

f. Dial-up MODEM.

g. Software.

PART 2 PRODUCTS

2.1 GENERAL EQUIPMENT REQUIREMENTS

Units of the same type of equipment shall be products of a single manufacturer. Each major component of equipment shall have the manufacturer's name and address, and the model and serial number in a conspicuous place. Materials and equipment shall be standard products of a manufacturer regularly engaged in the manufacturing of such products, which are of a similar material, design and workmanship. The standard products shall have been in a satisfactory commercial or industrial use for two years prior to use on this project. The two years' use shall include applications of equipment and materials under similar circumstances and of similar size. The two years' experience shall be satisfactorily completed by a product which has been sold or is offered for sale on the commercial market through advertisements, manufacturers' catalogs, or brochures. Products having less than a two-year field service record will be acceptable if a certified record of satisfactory field operation, for not less than 6,000 hours exclusive of the manufacturer's factory tests, can be shown. The equipment items shall be supported by a service organization. Items of the same type and purpose shall be identical, including equipment, assemblies, parts and components. Automatic temperature controls shall be direct digital controls that will provide the required sequence of operation.

2.1.1 Electrical and Electronic Devices

Electrical, electronic, and electropneumatic devices not located within a DDC panel shall have a NEMA ICS 1 enclosure in accordance with NEMA 250 unless otherwise shown.

2.1.2 Standard Signals

Except for air distribution terminal unit control equipment, the output of all analog transmitters and the analog input and output of all DDC controllers shall be 4-to-20 mAdc signals. The signal shall originate from current-sourcing devices and shall be received by current-sinking devices.

2.1.3 Ambient Temperature Limits

DDC panels shall have ambient condition ratings of 1.7 to 49 degees C and 10 to 95 percent relative humidity, noncondensing. Devices installed outdoors shall operate within limit ratings of minus 1.7 to plus 65.5 degees C. Instrumentation and control elements shall be rated for continuous operation under the ambient environmental temperature, pressure, humidity, and vibration conditions specified or normally encountered for the installed location.

2.1.4 Year 2000 Compliance

All equipment and software shall be Year 2000 compliant and shall be able to accurately process date/time data (including, but not limited to, calculating, comparing, and sequencing) from, into, and between the twentieth and twenty-first centuries, including leap year calculations, when used in accordance with the product documentation provided by the contractor, provided that all products (e.g. hardware, software, firmware) used in combination with other information technology, shall accurately process date/time data if other information technology properly exchanges date/time data with it.

2.2 TUBING

2.2.1 Copper

Copper tubing shall conform to ASTM B 88, ASTM B 88M and shall have sweat fittings and valves.

2.2.2 Stainless Steel

Stainless steel tubing shall conform to ASTM A 269 and shall have stainless steel compression fittings.

2.2.3 Plastic

Plastic tubing shall have barbed fittings and valves. Plastic tubing shall have the burning characteristics of linear low-density polyethylene tubing, shall be self-extinguishing when tested in accordance with ASTM D 635, shall have UL 94 V-2 flammability classification, and shall withstand stress cracking when tested in accordance with ASTM D 1693. Plastic-tubing bundles shall be provided with Mylar barrier and flame-retardant polyethylene jacket.

2.3 WIRING

2.3.1 Terminal Blocks

Terminal blocks shall be insulated, modular, feed-through, clamp style with recessed captive screw-type clamping mechanism, shall be suitable for rail mounting, and shall have end plates and partition plates for separation or shall have enclosed sides.

2.3.2 Control Wiring for 24-Volt Circuits

Control wiring for 24-volt circuits shall be 18 AWG minimum, stranded copper and shall be rated for 300-volt service.

2.3.3 Wiring for 120-Volt Circuits

Wiring for 120-volt circuits shall be 18 AWG minimum, stranded copper and shall be rated for 600-volt service.

2.3.4 Instrumentation Cable

Instrumentation cable shall be 18 AWG, stranded copper, single- or multiple-twisted, minimum 52 mm lay of twist, 100 percent shielded pairs, and shall have a 300-volt insulation. Each pair shall have a 20 AWG tinned-copper drain wire and individual overall pair insulation. Cables shall have an overall aluminum-polyester or tinned-copper cable-shield tape, overall 20 AWG tinned-copper cable drain wire, and overall cable insulation.

2.3.5 Transformers

Step down transformers shall be utilized where control equipment operates at lower than line circuit voltage. Transformers, other than transformers in bridge circuits, shall have primaries wound for the voltage available and secondaries wound for the correct control circuit voltage. Transformer shall be sized so that the connected load is 80 percent of the rated capacity or less. Transformers shall conform to UL 508 and NEMA ST 1.

2.4 ACTUATORS

Actuators shall be pneumatic or electric as shown and shall be provided with mounting and connecting hardware. Actuators shall fail to their spring-return positions on signal or power failure. The actuator stroke shall be limited in the direction of power stroke by an adjustable stop. Actuators shall have a visible position indicator. Actuators shall smoothly open or close the devices to which they are applied and shall have a full stroke response time of 60 seconds or less. Electric actuators shall have an oil-immersed gear train. Electric or electronic actuators operating in series shall have an auxiliary actuator driver. Electric or electronic actuators used in sequencing applications shall have an adjustable operating range and start point. Pneumatic actuators shall be rated for operating pressure except for high-pressure cylinder-type actuators.

2.4.1 Valve Actuators

Valve actuators shall be selected to provide a minimum of 125 percent of the motive power necessary to operate the valve over its full range of operation.

2.4.2 Positive Positioners

Positive positioners are required for pneumatic actuators. Each positive positioner shall be a pneumatic relay with a mechanical feedback mechanism and an adjustable operating range and starting point.

2.5 AUTOMATIC CONTROL VALVES

Valves shall have stainless-steel stems and stuffing boxes with extended necks to clear the piping insulation. Unless otherwise stated, valves shall have globe style bodies. Valve bodies shall be designed for not less than 861 kPa working pressure or 150 percent of the system operating pressure, whichever is greater. Valve leakage rating shall be 0.01 percent of rated Cv. Unless otherwise specified, bodies for

valves 38 mm and smaller shall be brass or bronze, with threaded or union ends; bodies for 52 mm valves shall have threaded ends; and bodies for valves 52 to 76 mm shall be of brass, bronze or iron. Bodies for valves 63.5 mm and larger shall be provided with flanged-end connections. Valve Cv shall be within 100 to 125 percent of the Cv shown.

2.5.1 Butterfly Valve Assembly

Butterfly valves shall be threaded lug type suitable for dead-end service and modulation to the fully-closed position, with carbon-steel bodies and noncorrosive discs, stainless steel shafts supported by bearings, and EPDM seats suitable for temperatures from minus -5 to plus 120 degrees C. Valves shall have a manual means of operation independent of the actuator. The rated Cv for butterfly valves shall be the value Cv at 70% open (60 degrees open).

2.5.2 Two-Way Valves

Two-way modulating valves shall have equal-percentage characteristics.

2.5.3 Three-Way Valves

Three-way valves shall provide linear flow control with constant total flow throughout full plug travel.

2.5.4 Duct-Coil Valves

Control valves with either flare-type or solder-type ends shall be provided for duct or terminal-unit coils. Flare nuts shall be furnished for each flare-type end valve.

2.5.5 Not Used

2.5.6 Valves for Hot-Water Service

For hot water service below 121 degees C and dual-temperature service, internal trim (including seats, seat rings, modulating plugs, and springs) of valves controlling water hotter than 100 degees C shall be Type 316 stainless steel. Internal trim for valves controlling water 100 degees C or less shall be brass or bronze. Nonmetallic parts of hot-water control valves shall be suitable for a minimum continuous operating temperature of 121 degees C or 10 degees C above the system design temperature, whichever is higher. Valves 102 mm and larger shall be butterfly valves.

2.6 DAMPERS

2.6.1 Damper Assembly

A single damper section shall have blades no longer than 1.22 m and shall be no higher than 1.83 m. Maximum damper blade width shall be 203 mm. Larger sizes shall be made from a combination of sections. Dampers shall be steel, or other materials where shown. Flat blades shall be made rigid by folding the edges. Blade-operating linkages shall be within the frame so that blade-connecting devices within the same damper section shall not be located directly in the air stream. Damper axles shall be 12.7 mm minimum, plated steel rods supported in the damper frame by stainless steel or bronze bearings. Blades mounted vertically shall be supported by thrust bearings. Pressure drop through dampers shall not exceed 9.96 Pa at 5.08 m/s in the wide-open position. Frames shall not be less than 52 mm in width. Dampers shall be tested in accordance with AMCA 500.

2.6.2 Operating Links

Operating links external to dampers, such as crankarms, connecting rods, and line shafting for transmitting motion from damper actuators to dampers, shall withstand a load equal to at least twice the maximum required damper-operating force. Rod lengths shall be adjustable. Links shall be brass, bronze, zinc-coated steel, or stainless steel. Working parts of joints and clevises shall be brass, bronze, or stainless steel. Adjustments of crankarms shall control the open and closed positions of dampers.

2.6.3 Damper Types

Dampers shall be parallel-blade type.

2.6.3.1 Outside Air, Return Air, and Relief Air Dampers

Outside air, return air and relief air dampers shall be provided where shown. Blades shall have interlocking edges and shall be provided with compressible seals at points of contact. The channel frames of the dampers shall be provided with jamb seals to minimize air leakage. Dampers shall not leak in excess of 102 L/s per square meter at 1017 Pa static pressure when closed. Seals shall be suitable for an operating temperature range of minus **40** to plus 93 degees C. Dampers shall be rated at not less than 10.16 m/s air velocity.

2.6.3.2 Mechanical and Electrical Space Ventilation Dampers

Mechanical and electrical space ventilation dampers shall be as shown. Dampers shall not leak in excess of 406.5 L/s square foot at 1017 Pa static pressure when closed. Dampers shall be rated at not less than 7.6 m/s air velocity.

2.6.3.3 Smoke Dampers

Smoke-damper and actuator assembly required per NFPA 90A shall meet the Class II leakage requirements of UL 555S. Dampers shall be rated at not less than 10.16 m/s air velocity.

2.6.4 Damper End Switches

Each end switch shall be a hermetically sealed switch with a trip lever and over-travel mechanism. The switch enclosure shall be suitable for mounting on the duct exterior and shall permit setting the position of the trip lever that actuates the switch. The trip lever shall be aligned with the damper blade.

2.7 DETECTORS

2.7.1 Smoke Detectors

Duct smoke detectors shall be provided in accordance with Section 13850 Paragraph 2.5.2.2. Furnishing, installation, and control of duct smoke detectors shall be coordinated between the direct digital controls and fire protection disciplines. ~~Duct smoke detectors shall be provided in supply and return air ducts in accordance with NFPA 90A. Duct smoke detectors shall conform to the requirements of UL 268A. Duct smoke detectors shall have perforated sampling tubes extended into the air duct. Detector circuitry shall be mounted in a metallic enclosure exterior to the duct. Detectors shall have~~

~~manual reset. Detectors shall be rated for air velocities that include air flows between 2.54 and 20.32 m/s. Detectors shall be powered from fire alarm control panel (FACP). Detectors shall have two sets of normally open alarm contacts and two sets of normally closed alarm contacts. Detectors shall be connected to the building fire alarm panel for alarm initiation. A remote annunciation lamp and accessible remote reset switch shall be provided for duct detectors that are mounted eight feet or more above the finished floor and for detectors that are not readily visible. Remote lamps and switches as well as the affected fan units shall be properly identified in etched rigid plastic placards.~~

2.7.2 Carbon Dioxide Detectors

Carbon Dioxide detector shall continuously check CO2 levels. Detector shall require one cal gas or zero and cal gas for ease in calibration. Drift performance shall use an infared source and a lithium tantalate detector, or competetive technology; with digital readout. Gas sampling method shall be via diffusion. Design shall fail safe, meaning the electronics cannot be damaged if the power is accidentally hooked to the wrong terminals. Each unit shall be electronically isolated so that multiple units can be connected to the same controller without electronic interference. Power shall be 115 V. Outputs shall be voltage and/or 4-20mA outputs compatible with the DDC system. The detector shall conform to the following:

Range	0-2000 ppm CO2
Max Annual Drift	+/- 75 ppm
Accuracy	+/- 5% or 75 ppm: whichever is greater
Repeatability	+/- 20 ppm
Minimum Calibration Interval	Two years
Response Time	Less than one minute
Operating Temperature Range	0-50 Degrees Centigrade
Power Requirements	18-30 VDC or 20-30 V RMS AC
Power Consumption	Less than 1 W

2.8 INSTRUMENTATION

2.8.1 Measurements

Transmitters shall be calibrated to provide the following measurements, over the indicated ranges, for an output of 4 to 20 mAdc:

a. Conditioned space temperature, from 10 to 29.9 degees C.

b. Duct temperature, from 4.4 to 60 degees C.

f. Heating hot-water temperature, from 37.8 to 121 degees C.

h. Outside-air temperature, from minus 0 to 54 degees C.

2.8.2 Temperature Instruments

2.8.2.1 Resistance Temperature Detectors (RTD)

Temperature sensors shall be 100 ohms 3- or 4-wire RTD. Each RTD shall be platinum with a tolerance of plus or minus 0.1 percent at 0 degees C, and shall be encapsulated in epoxy, series 300 stainless steel, anodized aluminum, or copper. Each RTD shall be furnished with an RTD transmitter as specified, integrally mounted unless otherwise shown.

2.8.2.2 Continuous Averaging RTD

Continuous averaging RTDs shall have a tolerance of plus or minus 1.0 degree C at the reference temperature, and shall be of sufficient length to ensure that the resistance represents an average over the cross section in which it is installed. The sensing element shall have a bendable copper sheath. Each averaging RTD shall be furnished with an RTD transmitter to match the resistance range of the averaging RTD.

2.8.2.3 RTD Transmitter

The RTD transmitter shall match the resistance range of the RTD. The transmitter shall be a two-wire, loop powered device. The transmitter shall produce a linear 4-to-20 mAdc output corresponding to the required temperature measurement. The output error shall not exceed 0.1 percent of the calibrated measurement.

2.8.3 Not Used

2.8.4 Not Used

2.8.5 Not Used

2.8.6 Differential Pressure Instruments

The instrument shall be a pressure transmitter with an integral sensing element. The instrument over pressure rating shall be 300 percent of the operating pressure. The sensor/transmitter assembly accuracy shall be plus or minus two percent of full scale. The transmitter shall be a two-wire, loop-powered device. The transmitter shall produce a linear 4-to-20 mAdc output corresponding to the required pressure measurement.

2.8.7 Thermowells

Thermowells shall be Series 300 stainless steel with threaded brass plug and chain, 52 mm lagging neck and extension type well. Inside diameter and insertion length shall be as required for the application.

2.8.8 Sunshields

Sunshields for outside air temperature sensing elements shall prevent the sun from directly striking the temperature sensing elements. The sunshields shall be provided with adequate ventilation so that the sensing element responds to the ambient temperature of the surroundings. The top of each sunshield

shall have a galvanized metal rainshield projecting over the face of the sunshield. The sunshields shall be painted white.

2.9 THERMOSTATS

Thermostat ranges shall be selected so that the setpoint is adjustable without tools between plus or minus 12.2 degees C of the setpoint shown. Thermostats shall be electronic or electric.

2.9.1 Nonmodulating Room Thermostats

Contacts shall be single-pole double-throw (SPDT), hermetically sealed, and wired to identified terminals. Maximum differential shall be minus 15 degees C. Room thermostats shall be enclosed with separate locking covers (guards).

2.9.2 Microprocessor Based Room Thermostats

Microprocessor based thermostats shall have built-in keypads for scheduling of day and night temperature settings. Access to the scheduling mode shall be by a password control code. When out of the scheduling mode, thermostats shall have continuous display of time, with AM and PM indicator, continuous display of day of week, and either continuous display of room temperature with display of temperature setpoint on demand, or continuous display of temperature setpoint with display of room temperature on demand. In the programmable mode, the display shall be used for interrogating time program ON-OFF setpoints for all seven days of the week. The time program shall allow two separate temperature setback intervals per day. The thermostats shall have a means for temporary and manual override of the program schedule, with automatic program restoration on the following day. Thermostats shall have a replaceable battery to maintain the timing and maintain the schedule in memory for one year in the event of a power outage. Maximum differential shall be 1 degee C. When used for heat pump applications, the thermostat shall have an emergency heat switch.

2.9.3 Modulating Room Thermostats

Modulating room thermostats shall have either one output signal, two output signals operating in unison, or two output signals operating in sequence, as required for the application. Each thermostat shall have an adjustable throttling range of minus 15.55 to minus 13.33 degees C for each output. Room thermostats shall be enclosed with separate locking covers (guards).

2.9.4 Nonmodulating Capillary Thermostats and Aquastats

Each thermostat shall have a capillary length of at least 1.5 m, shall have adjustable direct-reading scales for both setpoint and differential, and shall have a differential adjustable from minus 14.4 to minus 8.9 degees C. Aquastats shall be of the strap on type, with minus 12.2 degees C fixed differential.

2.9.5 Freezestats

Freezestats shall be manual reset, low temperature safety thermostats, with NO and NC contacts and a 6.09 m element which shall respond to the coldest 457 mm segment.

2.9.6 Modulating Capillary Thermostats

Each thermostat shall have either one output signal, two output signals operating in unison, or two output signals operating in sequence, as required for the application. Thermostats shall have adjustable throttling ranges of minus 15.6 to minus 13.33 degees C for each output.

2.9.7 Fan-Coil Unit Room Thermostats

Fan-coil unit room thermostats shall be of the low voltage type with locking covers, and shall be wall mounted not less than 1.52 m above the floor, unless otherwise shown. Electrical rating shall not exceed 2.5 amperes at 30 volts ac. Housing shall be corrosion resisting metal or molded plastic. Transformer and fan relay shall be provided for the proper operation of each thermostatic control system as necessary to suit the design of the control system using the thermostats specified below. Either separate heating thermostats and separate cooling thermostats or dual element heating cooling thermostats may be provided. Motor speed switches shall be provided for three-speed fan control.

2.9.7.1 Heating Thermostat

Fan-coil heating thermostats shall be provided with fixed heat anticipation and shall have a single-pole, single-throw (SPST) switch hermetically sealed and actuated by a bimetallic or bellows type element. Thermostats shall be provided with external temperature setting devices with a factory set maximum of **22.2** degees C. Heating thermostats shall have an adjustable range of at least 13 degrees below **22.2** degees C.

2.10 PRESSURE SWITCHES AND SOLENOID VALVES

2.10.1 Pressure Switches

Each switch shall have an adjustable setpoint with visible setpoint scale. Range shall be as shown. Differential adjustment shall span 20 to 40 percent of the range of the device.

2.10.2 Differential-Pressure Switches

Each switch shall be an adjustable diaphragm-operated device with two SPDT contacts, with taps for sensing lines to be connected to duct pressure fittings designed to sense air pressure. These fittings shall be of the angled-tip type with tips pointing into the air stream. The setpoint shall not be in the upper or lower quarters of the range and the range shall not be more than three times the setpoint. Differential shall be a maximum of 37.35 Pa at the low end of the range and 87.15 Pa at the high end of the range.

2.11 INDICATING DEVICES

2.11.1 Thermometers

2.11.1.1 Piping System Thermometers

Piping system thermometers shall have brass, malleable iron or aluminum alloy case and frame, clear protective face, permanently stabilized glass tube with indicating-fluid column, white face, black

numbers, and a 228.6 mm scale. Thermometers for piping systems shall have rigid stems with straight, angular, or inclined pattern.

2.11.1.2 Piping System Thermometer Stems

Thermometer stems shall have expansion heads as required to prevent breakage at extreme temperatures. On rigid-stem thermometers, the space between bulb and stem shall be filled with a heat-transfer medium.

2.11.1.3 Nonaveraging Air-Duct Thermometers

Air-duct thermometers shall have perforated stem guards and 45-degree adjustable duct flanges with locking mechanism.

2.11.1.4 Averaging Air-Duct Thermometers

Averaging thermometers shall have a 89 mm (nominal) dial, with black legend on white background, and pointer traveling through a 270-degree arc.

2.11.1.5 Accuracy

Thermometers shall have an accuracy of plus or minus one percent of scale range. Thermometers shall have a range suitable for the application.

2.11.2 Pressure Gauges

Gauges shall be 52 mm (nominal) size, back connected, suitable for field or panel mounting as required, shall have black legend on white background, and shall have a pointer traveling through a 270-degree arc. Accuracy shall be plus or minus three percent of scale range. Gauges shall meet requirements of ASME B40.1.

2.11.2.1 Pneumatic Actuator Gauges

Gauges for indicating signal output to pneumatic actuators shall have an outer scale of 3 to 15 psig in 1 psig graduations.

2.11.2.2 Air Storage Tank and Filter and Dryer Gauge

Gauges for air storage tanks or for use before and after dirt and oil filters or dryers, shall have a scale of 0 to 160 psig with 2 psig graduations.

2.11.2.3 Hydronic System Gauges

Gauges for hydronic system applications shall have ranges and graduations as shown.

2.11.3 Low Differential Pressure Gauges

Gauges for low differential pressure measurements shall be a minimum of 89 mm (nominal) size with two sets of pressure taps, and shall have a diaphragm-actuated pointer, white dial with black figures, and

pointer zero adjustment. Gauges shall have ranges and graduations as shown. Accuracy shall be plus or minus two percent of scale range.

2.12 CONTROL DEVICES AND ACCESSORIES

2.12.1 Relays

Control relay contacts shall have utilization category and ratings selected for the application, with a minimum of two sets of contacts (two normally open, two normally closed) enclosed in a dustproof enclosure. Relays shall be rated for a minimum life of one million operations. Operating time shall be 20 milliseconds or less. Relays shall be equipped with coil transient suppression devices to limit transients to 150 percent of rated coil voltage. Time delay relays shall be 2PDT with eight-pin connectors, dust cover, and a matching rail-mounted socket. Adjustable timing range shall be 0 to 5 minutes. Power consumption shall not be greater than three watts.

2.12.2 Current to Pneumatic (IP) Transducers

THE TRANSDUCERS SHALL BE TWO-WIRE CURRENT-TO-PRESSURE TRANSMITTERS THAT CONVERT A 4-TO-20 MADC INPUT SIGNAL TO A 3 TO 15 PSIG, OR A 15 TO 3 PSIG, PNEUMATIC OUTPUT, WITH A CONVERSION ACCURACY OF PLUS OR MINUS TWO PERCENT OF FULL SCALE, INCLUDING LINEARITY AND HYSTERESIS. INPUT IMPEDANCE SHALL NOT EXCEED 250 OHMS. AIR CONSUMPTION SHALL NOT BE GREATER THAN 0.25 SCFM.2.13 COMPRESSED AIR STATIONS

2.13.1 Air Compressor Assembly

The air compressor shall be a high pressure compressing unit with electric motor. The compressor shall be equipped with a motor with totally enclosed belt guard, an operating-pressure switch, safety relief valves, gauges, intake filter and intake silencer, and combination type magnetic starter with undervoltage protection and thermal-overload protection for each phase, and shall be supported by a steel base mounted on an air storage tank. The air compressor shall provide the compressed air required for control operation while operating not more than one-third of the time. The air storage tank shall be fabricated for a working pressure of not less than 200 psig, and constructed and certified in accordance with ASME BPV VIII Div I. The tank shall be of sufficient volume so that no more than six compressor starts per hour are required with the starting pressure switch differential set at 20 psig. The tank shall be provided with an automatic condensate drain trap with manual override feature. A second (duplex arrangement) compressor of capacity equal to the primary compressor shall be provided, with interlocked control to provide automatic changeover upon malfunction or failure of either compressor. A manual selector switch shall be provided to index the lead compressor including the automatic changeover.

2.13.2 Compressed Air Station Specialties

2.13.2.1 Refrigerated Dryer, Filters and, Pressure Regulator

A refrigerated dryer shall be provided in the air outlet line of the air storage tank. The dryer shall be of the size required for the full delivery capacity of the compressor. The air shall be dried at a pressure of not less than 70 psig to a temperature not greater than 35 . The dryer shall be provided with an automatic condensate drain trap with manual override feature. The refrigerant used in the dryer shall be

one of the fluorocarbon gases and have an Ozone Depletion Potential of not more than 0.05. A five micron prefilter and coalescing-type 0.03 micron oil removal filter with shut-off valves shall be provided in the dryer discharge. Each filter bowl shall be rated for 150 psig maximum working pressure. A pressure regulator, with high side and low side pressure gauges, and a safety valve shall be provided downstream of the filter. Pressure regulators of the relieving type shall not be used.

2.13.2.2 Flexible Pipe Connections

The flexible pipe connectors shall be designed for and service, and shall be constructed of rubber, tetrafluoroethylene resin, or braided corrosion-resistant steel, bronze, monel, or galvanized steel. The connectors shall be suitable for the service intended and may have threaded or soldered ends. The length of the connectors shall be as recommended by the manufacturer for the service intended.

2.13.2.3 Vibration Isolation Units

The vibration isolation units shall be standard products with published loading ratings, and shall be single rubber-in-shear, double rubber-in-shear, or spring type.

2.13.2.4 Compressed Air Piping

Control air delivered to the system shall conform to ISA S7.0.01. Air lines for pneumatic controls shall be seamless copper tubing or nonmetallic tubing. Air lines shall be concealed except in mechanical rooms and other areas where other tubing and piping is exposed. Air lines in exposed and concealed locations, free standing or enclosed in the conduit or other protective coverings, shall be run parallel to the building lines and shall be adequately supported from the building structure, at least every 6 feet horizontally and every 8 feet vertically. Copper tubing shall be hard-drawn in exposed areas and either hard-drawn or annealed in concealed areas. Only tool-made bends shall be used. Fittings for copper tubing shall be brass or copper solder joint type except at connections to apparatus, where fittings shall be brass compression type. Nonmetallic tubing shall be compounded from polyethylene, meeting the stress crack test of ASTM D 1693. Nonmetallic individual tube polyethylene or multitube instrument tubing bundle shall be classified as flame retardant under UL 94. The polyethylene material shall be rated as self-extinguishing when tested in accordance with ASTM D 635. Nonmetallic tubing shall be run within covered rigid metallic raceway, rigid conduit or electric metallic tubing except as indicated. Single nonmetallic tubing in a protective sheath, run parallel to the building lines and supported as indicated above, may be used above accessible ceilings and in other concealed but accessible locations. Air lines concealed in walls shall be hard-drawn copper tubing or nonmetallic tubing in rigid conduit. Terminal single lines shall be hard-drawn copper tubing, except when the run is less than 25mm in length, flexible polyethylene may be used. Nonmetallic tubing will not be used for applications where the tubing could be subjected to a temperature exceeding 54 degrees C. Except in walls and exposed locations, nonmetallic multitube instrument tubing bundle without conduit or metallic raceway protection, may be used where a number of air lines run to the same points, provided the multitube bundle is enclosed in a protective sheath, is run parallel to the building lines and is adequately supported as indicated above. Air lines shall be tested periodically for leaks during installation. Air lines shall be purged of dirt, impurities and moisture before connecting to the control equipment. Fittings for nonmetallic tubing shall be for instrument service and may be brass or acetal resin of the compression or barbed push-on type. Air lines shall be number coded or color coded and keyed to the submittal drawings for future identification and servicing the control system.

2.14 DIRECT DIGITAL CONTROL (DDC) HARDWARE

All functions, constraints, data base parameters, operator developed programs and any other data shall be downloadable from a portable workstation/tester or the central workstation/tester to network control panels, RIU's, universal programmable controllers, and unitary controllers. Download shall be accomplished through both the primary network and the local DDC portable workstation/tester port.

2.14.1 Network Control Panel

Network control panels shall be microcomputer-based with sufficient memory provided to perform all specified and shown network control panel functions and operations, including spare capacity for all spares and its I/O functions specified. Each network control panel and remote I/O units (RIU) shall have a minimum of 10% of its I/O functions as spare capacity but not less than 2 of each type used in each. The type of spares shall be in the same proportion as the implemented I/O functions on the panel, but in no case shall there be less than two spare points of each type. The panel I/O functions shall be furnished complete, with no changes or additions necessary to support implementation of spare functions. Output relays associated with digital signals shall be considered part of the I/O function, whether physically mounted in the enclosure or separately mounted. Implementation of spare points shall necessitate only providing the additional field sensor or control device, field wiring including connection to the system, and point definition assignment by the operator using the central workstation/tester or portable workstation/tester. The panel shall contain all necessary I/O functions to connect to field sensors and control panels. I/O function operation shall be fully supervised to detect I/O function failures. Network control panels shall operate in an independent stand-alone mode, which is defined as all network control panel operations performed by the network control panel without any continuing input from other Direct digital controls or portable workstation/tester. The network control panel shall be capable of controlling a mix of at least 32 RIUs, unitary controllers, and universal programmable controllers.

2.14.1.1 Integral Features

The network control panel shall include:

a. Main power switch.

b. Power on indicator.

c. Portable workstation/tester port, connector, and if necessary power supply.

d. Manufacturers control network port.

e. On-Off-Auto switches for each DO which controls a device. These switches shall be mounted in the field panel, with the exception of motors, for which the switch shall be mounted at the motor control center. On-Off-Auto switches are not required for DO associated with a status or alarm such as pilot lights. The status of these switches shall be available to the panel for further processing.

f. Minimum-Maximum-Auto switches, or Auto-Manual switches with manual output override, for each AO. The status of these shall be available to the panel for further processing.

g. An intrusion detection device, connected as an alarm.

2.14.1.2 Communication Interfaces

The following communication capabilities shall function simultaneously.

a. Manufacturers Control Network. Manufacturers control network communications interfaces for each data transmission systems (DTS) circuit between network control panels and RIUs, unitary controllers, and universal programmable controllers, shall be provided. Communication interfaces shall be provided between each network control panel and associated I/O functions. The DTS will provide for transmission speeds necessary to comply with performance requirements specified. DTS equipment shall be installed in the network control panel enclosure.

b. Portable Workstation/Tester Port. A communications port for interfacing to a portable workstation/tester shall be provided. Network control panel workstation/tester port other than RS-232,shall be converted to RS-232, including cabling and power supply, and shall be permanently installed in the panel.

c. Primary Network Port. The network control panel shall either have a built in primary network Port or be capable of accepting a primary network port expansion card for future networking to a base wide utility monitoring and control system (UMCS). The primary network port expansion card shall be either Ethernet (IEEE802.3) or ARCNET.

2.14.1.3 Memory and Real Time Clock (RTC) Backup

The network control panel memory and real time clock functions shall continue to operate for a minimum of 72 hours in the event of a power failure. If rechargeable batteries are provided, automatic charging of batteries shall be provided. Whenever a either a permanent workstation/tester or portable workstation/tester is monitoring the network control panel, a low battery alarm message shall be sent to it.

2.14.1.4 Duplex Outlet

A single phase, 120 Vac electrical service outlet for use with test equipment shall be furnished either inside or within 6 feet of the network control panel enclosure.

2.14.1.5 Locking Enclosures

Locking type mounting cabinets with common keying shall be furnished for each network control panel.

2.14.1.6 Failure Mode

Upon failure of the network control panel, either due to failure of the network control panel hardware or of the manufacturers control network, the network control panel shall revert to the failure mode as shown.

a. Manufacturers Control Network Failure: Upon failure of the manufacturers control network, the network control panel shall operate in an independent stand-alone mode.

b. Network Control Panel Hardware Failure: Upon failure of the network control panel hardware, the network control panel shall cease operation and stop communications with other network control

panels, RIUs, unitary controllers and universal programmable controllers connected to the affected network control panel. The affected network control panel shall respond to this failure as specified and shown.

2.14.2 RIU

The RIU shall be functionally a part of the network control panel as specified, but may be remotely located from the network control panel and communicate over a dedicated communication circuit. When remotely located, the I/O functions shall be subject to the same requirements as for the network control panel hardware. RIUs shall be used to connect remote inputs and outputs to a network control panel and shall contain all necessary I/O functions to connect to field sensors and control devices. RIU operation shall be fully supervised by the network control panel to detect failures. Each RIU shall have a minimum of 10 % of its I/O functions as spare capacity. The type of spares shall be in the same proportion as the implemented I/O functions on the RIU, but in no case shall there be less than two spare points of each type. The RIU shall be furnished complete, with no changes or additions necessary to support implementation of spare functions. Output relays associated with digital signals shall be considered part of the I/O function, whether physically mounted in the enclosure or separately mounted. Implementation of spare points by others shall require only providing the additional field sensor or control device, field wiring including connection to the system, and point definition assignment by the operator. The RIU shall either report the status of all connected points on each scan, or report the status of all points which have changed state or value since the previous scan.

2.14.2.1 Integral Features

The RIU shall include:

a. Main power switch.

b. Power on indicator.

c. Portable workstation/tester port, connector, and if necessary power supply.

d. Manufacturers control network port.

e. On-Off-Auto switches for each DO which controls a device. These switches shall be mounted in the RIU, with the exception of motors, for which the switch shall be mounted at the motor control center. On-Off-Auto switches are not required for DO associated with a status or alarm such as pilot lights. The status of these switches shall be available to the RIU for further processing.

f. Minimum-Maximum-Auto switches, or Auto-Manual switches with manual output override, for each AO. The status of these shall be available to the panel for further processing.

g. An intrusion detection device, connected as an alarm.

2.14.2.2 Duplex Outlet

A single phase, 120 Vac electrical service outlet for use with test equipment shall be furnished either inside or within 6 feet of the RIU.

2.14.2.3 Locking Enclosures

Locking type mounting cabinets with common keying shall be furnished for each RIU.

2.14.2.4 Failure Mode

Upon failure of the RIU, either due to failure of the RIU hardware or of the DTS, the RIU shall revert to the failure mode shown.

2.14.3 Universal Programmable Controller (UPC)

The universal programmable controller shall be a microprocessor based controller designed and programmed to control and monitor systems as shown. Resident programs shall be contained in reprogramable nonvolatile memory. Each universal programmable controller shall contain necessary power supplies, transformers, memory, I/O functions and communications interfaces necessary to perform its required functions and to provide control and monitoring of connected equipment and devices. It shall contain all necessary I/O functions to connect to field sensors and controls. I/O operation shall be fully supervised to detect I/O function failures. It shall provide for operation as a device connected to the system via the manufacturers control network.

2.14.3.1 Integral Features

The universal programmable controller shall include as a minimum:

a. Main power switch.

b. Power on indicator.

c. Portable workstation/tester port, connector, and if necessary power supply.

d. Manufacturers control network port.

e. I/O functions

(1) 8 DI

(2) 4 DO

(3) 8 AI

(4) 4 AO

(5) 1 PA

f. On-Off-Auto switches for each DO which controls a device. These switches shall be mounted in the universal programmable controller, with the exception of motors, for which the switch shall be mounted at the motor control center. On-Off-Auto switches are not required for DO associated with a status or alarm such as pilot lights. The status of these switches shall be available to the panel for further processing.

g. Minimum-Maximum-Auto switches, or Auto-Manual switches with manual output override, for each AO. The status of these shall be available to the panel for further processing.

2.14.3.2 Communication Interfaces

The UPC shall have the following communication capabilities which shall function simultaneously.

a. Manufacturers Control Network. The manufacturers control network communications interface for a data transmission systems (DTS) circuit between the UPC and a network control panels shall be provided. The DTS will provide for transmission speeds necessary to comply with performance requirements specified. DTS equipment shall be installed in the UPC Panel enclosure.

b. Portable Workstation/Tester Port. A communications port for interfacing to a portable workstation/tester shall be provided. A UPC workstation/tester port other than RS-232, shall be converted to RS-232, including cabling and power supply, and shall be permanently installed in the panel.

2.14.3.3 Memory and RTC Backup

The UPC memory and real time clock functions shall continue to operate for a minimum of 72 hours in the event of a power failure. If rechargeable batteries are provided, automatic charging of batteries shall be provided. Whenever a either a permanent workstation/tester or portable workstation/tester is monitoring the network control panel, a low battery alarm message shall be sent to it.

2.14.3.4 Specific Requirements

Each universal programmable controller shall be accessible for purposes of application selection, control parameters, set point adjustment, and monitoring from any DDC controller connected to the same manufacturers control network as the universal programmable controller. This shall be done using a portable workstation/tester connected to a portable workstation/tester port either directly or via modem.

2.14.3.5 Locking Enclosures

Locking type mounting cabinets with common keying shall be furnished for each enclosure.

2.14.3.6 Failure Mode

Upon failure of the universal programmable controller, it shall revert to the failure mode of operation as shown.

2.14.4 Unitary Controller

The unitary controller shall be a microprocessor based, stand-alone, dedicated purpose controller, communicating with the network control panel, designed and programmed to control air distribution system mixing boxes, terminal units, heat pumps, fan coil units, self-contained DX units or VAV boxes as shown. Each unitary controller shall contain resident programs in nonvolatile memory for each specific application implemented. Each unitary controller shall contain necessary power supplies, transformers, memory, I/O functions and communications interfaces necessary to perform its required

functions and to provide control and monitoring of connected equipment and devices. It shall contain all necessary I/O functions to connect to field sensors and controls. I/O operation shall be fully supervised to detect I/O function failures and shall provide for operation as a device connected to the network control panel via the manufacturers control network.

2.14.4.1 Integral Features

The unitary controller shall include:

a. Main power switch.

b. Power on indicator.

c. Portable workstation/tester port, connector, and power supply.

d. Manufacturers control network port.

e. All I/O functions required to implement the requirements as shown.

f. On-Off-Auto switches for each DO which controls a device. These switches shall be mounted in the field panel, with the exception of motors, for which the switch shall be mounted at the motor control center. On-Off-Auto switches are not required for DO associated with a status or alarm such as pilot lights. The status of these switches shall be available to the panel for further processing.

g. Minimum-Maximum-Auto switches, or Auto-Manual switches with manual output override, for each AO. The status of these shall be available to the panel for further processing.

2.14.4.2 Communication Interfaces

The unitary controller shall have the following communication capabilities which shall function simultaneously.

a. Manufacturers Control Network. The manufacturers control network communications interface for a data transmission systems (DTS) circuit between the unitary controller and a network control panel shall be provided. The DTS will provide for transmission speeds necessary to comply with performance requirements specified. DTS equipment shall be installed in the unitary control panel enclosure.

b. Portable Workstation/Tester Port. A communications port for interfacing to a portable workstation/tester shall be provided. A unitary controller workstation/tester port other than RS-232, shall be converted to RS-232, including cabling and power supply, and shall be permanently installed in the panel. For unitary controller applications where the controller is not mounted in an enclosure, such as for fan-coil units or VAV terminal units, a portable conversion device for an RS-232 connection to the portable workstation/tester may be provided.

2.14.4.3 Specific Requirements

Unitary controller components for new air distribution terminal units shall be furnished to the air distribution terminal unit manufacturer for factory mounting and calibration. Existing air distribution terminal units shall be controlled by field installed unitary controllers.

a. Accessibility and Interfaces: Each unitary controller shall be accessible for purposes of application selection, control parameters, set point adjustment, and monitoring using a portable workstation/tester connected to the manufacturers control network. They shall also be accessible with a portable workstation/tester connected to the unitary controller portable workstation/tester port.

b. Air Distribution Terminal Unit Controls - Pressure Independent: Controls shall consist of a transducer for connection to the velocity-sensing device provided by the terminal unit supplier in the primary air entering the terminal unit, a room temperature sensor, a damper actuator, and an adjustable microprocessor-based controller. **The room temperature sensor shall have setpoint adjustment and temperature display, timed override of unoccupied mode, and a communication port.** The controller shall operate the damper for cooling and heating and provide control outputs for duct heating coil if applicable. This controller capability shall allow the sequencing of the damper and the heating coil to maintain conditions in the space.

c. Air Distribution Terminal Unit Controls - Pressure Independent with Recirculating Fan: Controls for pressure-independent boxes with recirculating fans shall consist of a transducer for connection to the velocity-sensing device provided by the terminal unit supplier in the primary air entering the terminal unit, a room temperature sensing element, a damper actuator, an adjustable microprocessor-based terminal unit controller, and a switch to operate the recirculation fan, provided by the terminal unit supplier. **The room temperature** sensor shall have setpoint adjustment and temperature display, timed override of unoccupied mode, and a communication port. The controller shall operate the damper for cooling and shall provide outputs for controlling the recirculation fan and duct heating coil in sequence for heating.

d. Air Distribution Terminal Unit Damper Actuator: Air distribution terminal unit damper actuator shall open or close the device to which it is connected within 60 seconds. **The damper** actuator shall utilize spring return to fail to the position shown on loss of power or control signal.

2.14.4.4 Failure Mode

Upon failure of the unitary controller, it shall revert to the failure mode of operation as shown.

2.14.6 Boiler Control Panel

Boiler control panel shall be microprocessor-based and shall provide, both locally and through the Manufacturers Control Network, the control, monitoring, and safety equipment functions provided by the boiler manufacturer's control panel(s) (two communications ports total). The boiler control panel instrumentation and controls ranges and accuracies shall match those of the boiler manufacturer's control devices. The boiler panel shall have a communication port for interface to a Portable Workstation/Tester through either the Manufacturers Control Network or modem for boiler(s) and start/stop, boiler water temperature reset, and monitoring of boiler operating status, alarms.

2.14.7 I/O Functions

2.14.7.1 DDC Hardware I/O Functions

I/O Functions shall be provided as part of the DDC system and shall be in accordance with the following:

a. The analog input (AI) function shall monitor each analog input, perform A-to-D conversion, and hold the digital value in a buffer for interrogation. The A-to-D conversion shall have a minimum resolution of 10 bits plus sign. Signal conditioning shall be provided for each analog input. Analog inputs shall be individually calibrated for zero and span, in hardware or in software. The AI shall incorporate common mode noise rejection of 50 dB from 0 to 100 Hz for differential inputs, and normal mode noise rejection of 20 dB at 60 Hz from a source impedance of 10,000 ohms. Input ranges shall be within the range of 4-to-20 mAdc.

b. The analog output (AO) function shall accept digital data, perform D-to-A conversion, and output a signal within the range of 4-to-20 mAdc. D-to-A conversion shall have a minimum resolution of eight bits plus sign. Analog outputs shall be individually calibrated for zero and span. Short circuit protection on voltage outputs and open circuit protection on current outputs shall be provided. **An individual** gradual switch for manual override of each analog output and means of physically securing access to these switches shall be provided. Each AO shall have a three-position switch for selection of the DDC control signal, no control, or a locally generated control signal for connection to the controlled device. Feedback shall be provided to the system as to the status of the output (manual control or automatic). Switches for pneumatic control outputs shall provide a connection for an externally generated pneumatic signal. All switches shall be either of a key operated design with the same keying system used for other outputs or otherwise suitably protected from unauthorized access.

c. The digital input (DI) function shall accept on-off, open-close, or other change of state (two state data) indications. Isolation and protection against an applied steady-state voltage up to 180 Vac peak shall be provided.

d. The digital output (DO) function shall provide contact closures for momentary and maintained operation of output devices. Closures shall have a minimum duration of 0.1 second. DO relays shall have an initial breakdown voltage between contacts and coil of at least 500 V peak. Electromagnetic interference suppression shall be furnished on all output lines to limit transients to nondamaging levels. Protection against an applied steady-state voltage up to 180 Vac peak shall be provided. Minimum contact rating shall be one ampere at 24 Vac. **Key locked** HOA switches shall be provided for manual override of each digital output. Feedback shall be provided to the system as to the status of the output (manual control or automatic). Switches shall be common keyed.

e. The pulse accumulator function shall have the same characteristics as the DI. In addition, a buffer shall be provided to totalize pulses and allow for interrogation by the DDC system. The pulse accumulator shall accept rates up to 20 pulses per second. The totalized value shall be reset to zero upon operator's command.

f. Signal conditioning for sensors shall be provided as specified.

g. The binary coded decimal (BCD) function: The BCD function shall have the same characteristics as the DI, except that, in addition, a buffer shall be provided to totalize inputs and allow for interrogation by the network control panel. The BCD function shall have 16-channel optically isolated buffered inputs to read four digit numbers. The BCD function shall accumulate inputs at rates up to 10 inputs per second.

2.14.7.2 Failure Mode

Upon failure of the I/O function, including data transmission failure, logic power supply failure, DDC processor malfunction, software failure, interposing relay power failure, or any other failure which prevents stand alone operation of any DDC normally capable of stand alone operation, connected outputs shall be forced to the failure mode shown.

2.14.8 Portable Workstation/Tester

A portable workstation/tester shall be provided and shall be able to connect to any DDC hardware. The portable workstation/tester shall consist of a portable computer with a nominal 254 mm active color matrix liquid crystal display, capable of displaying up to 256 colors at a minimum resolution of 640 X 480 pixels, an external VGA monitor port, 32 bit microprocessor operating at a minimum of 100 MHZ. The portable workstation/tester shall have, as a minimum, a 1200 MB hard drive, 16 megabytes of memory, integral pointing device, serial and parallel ports, color VGA video port for an external color monitor, 89 mm floppy disk drive, modem, PCMCIA type 3 slot, rechargeable battery, battery charger and 120 Vac power supply. It shall include carrying case, extra battery, charger and a compatible network adapter. The workstation/tester shall:

a. Run DDC diagnostics.

b. Load all DDC memory resident programs and information, including parameters and constraints.

c. Display any AI, DI, AO, DO, or PA point in engineering units for analog points or status for digital points.

d. Control any AO or DO.

e. Provide an operator interface, contingent on password level, allowing the operator to use full English language words and acronyms, or an object oriented graphical user interface.

f. Display database parameters.

g. Modify database parameters.

h. Accept DDC software and information for subsequent loading into a specific DDC. Provide all necessary software and hardware required to support this function, including an EIA ANSI/EIA/TIA 232-E port.

i. Disable/enable each DDC.

j. Perform all workstation functions as specified.

2.14.9 Central Workstation/Tester

A central workstation/tester shall be provided and shall be able to communicate any network control panel via the primary network. The central workstation/tester shall be functionally equivalent to the portable workstation/tester but is intended to be a stationary unit. The central workstation/tester shall consist of a central computer with a nominal 14 mm VGA color display, capable of displaying up to 256

colors at a minimum resolution of 640 X 480 pixels, 32 bit microprocessor operating at a minimum of 100 MHZ. The central workstation/tester shall have, as a minimum, a 2100 MB hard drive, 32 megabytes of memory, integral pointing device, serial and parallel ports, color VGA video port for an external color monitor, 89 mm floppy disk drive, modem, PCMCIA type three slot, rechargeable battery, battery charger, 120 Vac power supply and network adapter (Ethernet IEEE802.3 or ARCNET). The central workstation/tester shall:

a. Run DDC diagnostics.

b. Load all DDC memory resident programs and information, including parameters and constraints.

c. Display any AI, DI, AO, DO, or PA point in engineering units for analog points or status for digital points.

d. Control any AO or DO.

e. Provide an operator interface, contingent on password level, allowing the operator to use full English language words and acronyms, or an object oriented graphical user interface.

f. Display database parameters.

g. Modify database parameters.

h. Accept DDC software and information for subsequent loading into a specific DDC. Provide all necessary software and hardware required to support this function, including an EIA ANSI/EIA/TIA 232-E port.

i. Disable/enable each DDC.

j. Perform all workstation functions as specified.

2.14.10 Data Terminal Cabinet (DTC)

The DTC shall be an independent metallic enclosure not physically part of the network control panel/RIU as shown. The DTC shall be sized to accommodate the number of I/O functions required for each network control panel/RIU, including installed spares, plus 10% expansion for each type of I/O function provided. The DTC shall be divided into analog input and output groups and digital input and output groups. The DTC shall be provided with double sided screw type terminal strips. One side of the terminal strip shall be used for termination of field wiring from instrumentation-mentation and controls. The other side shall be used to connect the DTC to the network control panel/RIU. Terminal strips shall have individual terminal identification numbers. The DTC shall be a locking type mounting enclosure, with common keying and door switch wired to an input for intrusion alarm annunciation at the central station. DTC keying shall be identical to network control panel/RIU keying.

2.15 DDC SOFTWARE

All DDC software described in this specification shall be furnished as part of the complete DDC System.

2.15.1 Operating System

Each DDC shall contain an operating system that controls and schedules that DDC's activities in real time. The DDC shall maintain a point database in its memory that includes all parameters, constraints, and the latest value or status of all points connected to that DDC. The execution of DDC application programs shall utilize the data in memory resident files. The operating system shall include a real time clock function that maintains the seconds, minutes, hours, date and month, including day of the week. Each DDC real time clock shall be automatically synchronized with the network control panel real time clock at least once per day to plus or minus 10 seconds. When the network control panel is connected to a central workstation/tester, the network control panel RTC shall be updated by the central workstation/tester RTC. The time synchronization shall be accomplished without operator intervention and without requiring system shutdown. The operating system shall allow loading of software, data files data entry, and diagnostics from the central workstation/tester both locally through the central workstation/tester port and remotely through a network control panel and the manufacturers control network.

2.15.1.1 Startup

The DDC shall have startup software that causes automatic commencement of operation without human intervention, including startup of all connected I/O functions. A DDC restart program based on detection of power failure at the DDC shall be included in the DDC software. Upon restoration of power to the DDC, the program shall restart equipment and restore loads to the state at time of power failure, or to the state as commanded by time programs or other overriding programs. The restart program shall include start time delays between successive commands to prevent demand surges or overload trips. The startup software shall initiate operation of self-test diagnostic routines. Upon failure of the DDC, if the database and application software are no longer resident or if the clock cannot be read, the DDC shall not restart and systems shall remain in the failure mode indicated until the necessary repairs are made. If the database and application programs are resident, the DDC shall resume operation after an adjustable time delay of from 0 to 600 seconds. The startup sequence for each DDC shall include a unique time delay setting for each control output when system operation is initiated.

2.15.1.2 Operating Mode

Each DDC shall control and monitor functions as specified, independent of communications with other DDC. This software shall perform all DDC functions and DDC resident application programs as specified using data obtained from I/O functions and based upon the DDC real time clock function. When communications circuits between the DDC are operable, the DDC shall obtain real time clock updates and any required global data values transmitted from other network control panels. The DDC software shall execute commands after performing constraints checks in the DDC. Status and analog values, including alarms and other data shall be transmitted from other network control panels when communications circuits are operable. If communications are not available, each DDC shall function in stand-alone mode and operational data, including the latest status and value of each point and results of calculations, normally transmitted from other network control panels shall be stored for later transmission to the network control panel. Storage for the latest 256 values shall be provided at each network control panel. Each DDC shall accept software downloaded from the network control panel. Constraints shall reside at the DDC.

2.15.1.3 Failure Mode

Upon failure for any reason, each DDC shall perform an orderly shutdown and force all DDC outputs to a predetermined (failure mode) state, consistent with the failure modes shown and the associated control device.

2.15.2 Functions

The Contractor shall provide software necessary to accomplish the following functions, as appropriate, fully implemented and operational, within each network control panel, RIU, unitary controller and universal programmable controller.

a. Scanning of inputs.

b. Control of outputs.

c. Reporting of analog changes outside a selectable differential.

d. Reporting of unauthorized digital status.

e. Reporting of alarms automatically to network control panel.

f. Reporting of I/O status to network control panel upon request.

g. Maintenance of real time, updated by the network control panel at least once a day.

h. Communication with the network control panel.

i. Execution of DDC resident application programs.

j. Averaging or filtering of AIs.

k. Constraints checks (prior to command issuance).

l. Diagnostics.

m. Portable workstation/tester operation as specified.

n. Reset of PA by operator based on time and value.

2.15.2.1 Analog Monitoring

The system shall measure and transmit analog values including calculated analog points. An analog change in value is defined as a change exceeding a preset differential value as specified. The record transmitted for each analog value shall include a readily identifiable flag which indicates the abnormal status of the value when it deviates from operator selectable upper and lower analog limits. Analog values shall be expressed in proper engineering units with sign. Engineering units conversions shall be provided for each measurement. Each engineering units conversion set shall include range, span, and conversion equation. A vocabulary of engineering unit descriptors shall be provided, using at least three

alphanumeric characters to identify information in the system. The system shall support 255 different engineering units.

2.15.2.2 Logic (Virtual) Points

Logic (virtual) points shall be software points entered in the point database which are not directly associated with a physical I/O function. Logic (virtual) points shall be analog or digital points created by calculation from any combination of digital and analog points, or other data having the properties of real points, including alarms, without the associated hardware. Logic (virtual) points shall be defined or calculated and entered into the database by the Contractor. The calculated analog point shall have point identification in the same format as any other analog point. The calculated point shall be used in any program where the real value is not obtainable directly. Constants used in calculations shall be changeable on-line by the operator. Calculated point values shall be current for use by the system within 10 seconds of the time of any input changes.

2.15.2.3 State Variables

If an analog point represents more than two (up to eight) specific states, each state shall be nameable. For example, a level sensor shall be displayed at its measured engineering units plus a state variable with named states usable in programs or for display such as low alarm/low/normal/high/high alarm.

2.15.2.4 Analog Totalization

Any analog point shall be operator assignable to the totalization program. Up to eight analog values shall be totalized within a selectable time period. At the end of the period, the totals shall be stored. Totalization shall then restart from zero for the next time period. The program shall keep track of the peak and total value measured during the current period and for the previous period. The operator shall be able to set or reset each totalized value individually. The time period shall be able to be operator defined, modified or deleted on-line.

2.15.2.5 Energy Totalization

The system shall calculate the heat energy in Btus, for each energy source consumed by the mechanical systems specified, totalize the calculated Btus, the instantaneous rate in Btus per hour, and store totals in thousands of Btus (MBtu). The Btus calculated shall be totalized for an adjustable time period. The time period shall be defined uniquely for each Btu totalization.

2.15.2.6 Trending

Any analog or calculated point shall be operator assignable to the trend program. Up to eight points shall be sampled at individually assigned intervals, selectable between one minute and two hours. A minimum of the most recent 128 samples of each trended point shall be stored. The sample intervals shall be able to be defined, modified, or deleted on-line.

2.15.3 I/O Point Database/Parameter Definition

Each I/O point shall be defined in a database residing in the DDC. The definition shall include all physical parameters associated with each point. Each point shall be defined and entered into the database by the Contractor, including as applicable:

a. Name.

b. Device or sensor type (i.e., sensor, control relay, motors).

c. Point identification number.

d. Unit.

e. Building number.

f. Area.

g. Island.

h. DDC number and channel address.

i. KW (running).

j. KW (starting).

k. Sensor range.

l. Controller range.

m. Sensor span.

n. Controller span.

o. Engineering units conversion (scale factor).

p. Setpoint (analog).

q. High reasonableness value (analog).

r. Low reasonableness value (analog).

s. High alarm limit differential (return to normal).

t. Low alarm limit differential (return to normal).

u. High alarm limit (analog).

v. Low alarm limit (analog).

w. Alarm disable time period upon startup or change of setpoint.

x. Analog change differential (for reporting).

y. Alarm class and associated primary message text.

z. High accumulator limit (pulse).

aa. Status description.

bb. Run time target.

cc. Failure mode as specified and shown.

dd. Constraints as specified.

2.15.4 Alarm Processing

Each DDC shall have alarm processing software for AI, DI, and PA alarms for all real and virtual points connected to that DDC.

2.15.4.1 Digital Alarms Definition

Digital alarms are those abnormal conditions indicated by DIs as specified and shown.

2.15.4.2 Analog Alarms Definition

Analog alarms are those conditions higher or lower than a defined value, as measured by an AI. Analog readings shall be compared to predefined high and low limits, and alarmed each time a value enters or returns from a limit condition. Unique high and low limits shall be assigned to each analog point in the system. Analog alarm limits shall be stored in the DDC database. Each analog alarm limit shall have an associated unique limit differential specifying the amount by which a variable must return into the proper operating range before being annunciated as a return-to-normal-state. All limits and differentials shall be entered on-line by the operator in limits of the measured variable, without interruption or loss of monitoring of the point concerned. The program shall automatically change the high or low limits or both, of any analog point, based on time scheduled operations as specified, allowing for a time interval before the alarm limit becomes effective. In CPA applications, key the limit to a finite deviation traveling with the setpoint. The system shall automatically suppress analog alarm reporting associated with a digital point when that digital point is turned off.

2.15.4.3 Pulse Accumulator Alarms Definition

Pulse accumulator alarms are those conditions calculated from totalized values of accumulator inputs or PA input rates that are outside defined limits as specified and shown. PA totalized values shall be compared to predefined limits and alarmed each time a value enters a limit condition. Unique limits shall be assigned to each PA point in the system. Limits shall be stored in the DDC database.

2.15.5 Constraints

2.15.5.1 Equipment Constraints Definitions

Each control point in the database shall have DDC resident constraints defined and entered by the Contractor, including as applicable:

a. Maximum starts (cycles) per hour.

b. Minimum off time.

c. Minimum on time.

d. High limit (value in engineering units).

e. Low limit (value in engineering units).

2.15.5.2 Constraints Checks

Control devices connected to the system shall have the DDC memory resident constraints checked before each command is issued to insure that no equipment damage will result from improper operation. Each command shall be executed by the DDC only after all constraints checks have been passed. Each command point shall have unique constraints assigned. High and low "reasonableness" values or one differential "rate-of-change" value shall be assigned to each AI. Values outside the reasonableness limits shall be rejected and an alarm message sent to the network control panel or portable workstation/tester. Status changes and analog point values shall be reported to the workstation upon operator request, such as for reports, alphanumeric displays, graphic displays, and application programs. Each individual point shall be capable of being selectively disabled by the operator from a workstation/tester. Disabling a point shall prohibit monitoring and automatic control of that point.

2.15.6 Diagnostics

Each DDC shall have self-test diagnostic routines implemented in firmware. The tests shall include routines that exercise memory. Diagnostic software shall be usable in conjunction with the central workstation/tester and portable workstation/tester. The software shall display messages in English to inform the tester's operator of diagnosed problems.

2.15.7 Summer-Winter Operation Monitoring

The system shall provide software to automatically change the operating parameters, monitoring of alarm limits, and start-stop schedules for each mechanical system from summer to winter and vice-versa. The software shall provide automatic commands to applications programs to coordinate proper summer or winter operation. Change over setpoints shall be operator selectable and settable.

2.15.8 Control Sequences and Control Loops

Sufficient memory shall be provided to implement the requirements specified and shown for each DDC. Specific functions to be implemented are defined in individual system control sequences and database tables shown in the drawings, and shall include, as applicable, the following:

a. PI Control: This function shall provide proportional control and proportional plus integral control.

b. Two Position Control: This function shall provide control for a two state device by comparing a set point against a process variable and an established deadband.

c. Floating Point Control: This function shall exercise control when an error signal exceeds a selected deadband, and shall maintain control until the error is within the deadband limits.

d. Signal Selection: This function shall allow the selection of the highest or lowest analog value from a group of analog values as the basis of control. The function shall include the ability to cascade analog values so that large numbers of inputs can be reduced to one or two outputs.

e. Signal Averaging: This function shall allow the mathematical calculation of the average analog value from a group of analog values as the basis of control. The function shall include the ability to "weight" the individual analog values so that the function output can be biased as necessary to achieve proper control.

f. Reset Function: This function shall develop an AO based on up to two AIs and one operator specified reset schedule.

g. Cooling/Heating Operation Program: Software shall be provided to change, either automatically or on operator command, the operating parameters, monitoring of alarm limits, and start-stop schedules for each mechanical system where such a change from cooling to heating and vice versa is meaningful. The software shall provide commands to application programs to coordinate cooling or heating mode operation. Software shall automatically switch facilities from cooling to heating, and vice versa, based on schedules or temperatures. All HVAC equipment and systems shall be assigned to the program.

2.15.9 Command Priorities

A scheme of priority levels shall be provided to prevent interaction of a command of low priority with a command of higher priority. The system shall require the latest highest priority command addressed to a single point to be stored for a period of time longer than the longest time constraint in the on and off states, insuring that the correct command shall be issued when the time constraint is no longer in effect or report the rejected command. Override commands entered by the operator shall have higher priority than those emanating from applications programs.

2.15.10 Resident Application Software

The Contractor shall provide resident applications programs to achieve the sequences of operation, parameters, constraints, and interlocks necessary to provide control of the systems connected to the DDC system. Application programs shall be resident and shall execute in the DDC, and shall coordinate with each other, to insure that no conflicts or contentions remain unresolved. The Contractor shall coordinate the application programs specified with the equipment and controls operation, and other specified requirements. A scheme of priority levels shall be provided to prevent interaction of a command of low priority with a command of higher priority. The system shall require the latest highest priority command addressed to a single point to be stored for a period of time longer than the longest time constraint in the ON and OFF states, insuring that the correct command shall be issued when the time constraint is no longer in effect or the rejected command shall be reported. Override commands entered by the operator shall have higher priority than those emanating from application programs.

2.15.10.1 Program Inputs and Outputs

The Contractor shall select the appropriate program inputs listed for each application program to calculate the required program outputs. Where the specific program inputs are not available, a "default" value or virtual point appropriate for the equipment being controlled and the proposed sequence of operation shall be provided to replace the missing input, thus allowing the application program to operate. AIs to application programs shall have an operator adjustable deadband to preclude short cycling or hunting. Program outputs shall be real analog or digital outputs or logic (virtual) points as required to provide the specified functions. The Contractor shall select the appropriate input and output signals to satisfy the requirements for control of systems as shown.

2.15.10.2 DDC General Conditions

The Contractor shall provide software required to achieve the sequences of operation, parameters, constraints, and interlocks shown. Application software shall be resident in the DDC in addition to any other required software. In the event of a DDC failure, the controlled equipment shall continue to function in the failure mode shown.

2.15.10.3 Scheduled Start/Stop Program

This program shall start and stop equipment based on a time of day schedule for each day of the week, and on a holiday schedule. To eliminate power surges, an operator adjustable time delay shall be provided between consecutive start commands.

a. Program Inputs:

(1) Day of week/holiday.

(2) Time of day.

(3) Cooling and heating high-low alarm limits.

(4) Cooling and heating start-stop schedules.

(5) Cooling or heating mode of operation.

(6) Equipment status.

(7) Equipment constraints.

(8) Consecutive start time delay.

b. Program Outputs: Start/stop signal.

2.15.10.4 Optimum Start/Stop Program

This program shall start and stop equipment as specified for the scheduled start/stop program, but shall include a sliding schedule based on indoor and outdoor air conditions. The program shall take into account the thermal characteristics of the structure, and indoor and outdoor air conditions, using

prediction software to determine the minimum time of HVAC system operation needed to satisfy space environmental requirements at the start of the occupied cycle, and determine the earliest time for stopping equipment at the day's end without exceeding space environmental requirements. An adaptive control algorithm shall be utilized to automatically adjust the constants used in the program.

a. Program Inputs:

(1) Day of week/holiday.

(2) Time of day.

(3) Cooling or heating mode of operation.

(4) Equipment status.

(5) Cooling and heating building occupancy schedules.

(6) Space temperature.

(7) Building heating constant (operator adjustable and automatically optimized).

(8) Building cooling constant (operator adjustable and automatically optimized).

(9) OA temperature.

(10) Required space temperature at occupancy (heating).

(11) Required space temperature at occupancy (cooling).

(12) Equipment constraints.

(13) Cooling and heating high-low alarm limits.

b. Program Outputs: Start/stop signal.

2.15.10.5 Day-Night Setback Program

The software shall limit the rise or drop of space temperature (or specified fluid temperature) during unoccupied hours. Whenever the space temperature (or specified fluid temperature) is above (or below for heating) the operator assigned temperature limit, the system shall be turned on until the temperature is within the assigned temperature limit.

a. Program Inputs:

(1) Day of week.

(2) Time of day.

(3) Cooling or heating mode of operation.

(4) Cooling and heating occupancy schedules.

(5) Equipment status.

(6) Space temperature (or specified fluid temperature).

(7) Minimum space temperature (or specified fluid temperature) during unoccupied periods.

(8) Maximum space temperature (or specified fluid temperature) during unoccupied periods.

(9) Equipment constraints.

b. Program Outputs: Start/stop signal.

2.15.10.6 Economizer Program I

The software shall reduce the HVAC system cooling requirements when the OA dry bulb temperature is less than the return air temperature. When the OA dry bulb temperature is above the return air temperature or changeover setpoint, the OA dampers, return air dampers, and relief air dampers shall be positioned to provide minimum required OA. When the OA dry bulb temperature is below a changeover setpoint temperature, the OA dampers, return air dampers, and exhaust air dampers shall be positioned to maintain the required mixed air temperature.

a. Program Input:

(1) Changeover conditions.

(2) OA dry bulb temperature.

(3) RA dry bulb temperature.

(4) Mixed air dry bulb temperature.

(5) Equipment constraints.

b. Program Output: Damper actuator/cooling control signal.

2.15.10.7 Ventilation/Recirculation and Flush Programs

The software shall reduce the HVAC system thermal load for two modes of operation and provide for flushing of the building as follows:

a. Ventilation mode: In this mode, the system shall precool the space prior to building occupancy. When the outside air temperature is lower than the space temperature, the outside air damper and exhaust air damper shall open to their maximum positions and the return air damper shall close to its minimum position.

b. Recirculation mode: In this mode, the system shall preheat the space prior to building occupancy. When the outside air temperature is lower than the space temperature, the outside air damper and the exhaust air damper shall close to their minimum positions and the return air damper shall open to its maximum position.

c. Flush mode: The software shall use the HVAC supply system to provide 100% outside air for ventilation purpose and flush building spaces. The network control panel shall modulate the control valves to maintain the air supply temperature setpoints while the flush program is in effect. The flush mode shall be manually initiated and have the highest priority (it shall override all other programs). The outside air damper and the exhaust air damper shall be closed at other times during unoccupied periods, except for economizer operation during day/night setback periods. For systems without mechanical cooling, this program shall, in addition to the above requirements, act as an economizer. The outside, return, and exhaust air dampers shall be modulated to maintain the required mixed air temperature setpoint. When this program is released, the outside and exhaust air dampers shall return to their minimum positions, and the return air damper shall return to its maximum position.

d. Program Inputs:

(1) Day of week.

(2) Time of day.

(3) Cooling or heating mode of operation.

(4) Equipment status.

(5) Cooling and heating occupancy schedules.

(6) OA dry bulb temperature.

(7) Space temperature.

(8) Equipment constraints.

e. Program Output: Damper actuator control signal.

2.15.10.8 Hot Deck/Cold Deck Temperature Reset Program

The software shall use space, mixed air, and deck temperatures to calculate the hot deck/cold deck temperature setpoints in dual duct and multizone HVAC systems. The program shall select the zones with the greatest heating and cooling requirements; establish the HVAC minimum hot and cold deck temperature differentials required to meet the zone temperatures; modulate valves to maintain deck temperature setpoints; and modulate zone dampers to maintain space temperature setpoints, without exceeding space humidity limits (where shown).

a. Program Inputs:

(1) Space temperature setpoint.

(2) Space humidity limit (where shown).

(3) Mixing box damper position or proportional signal from primary element.

(4) Hot deck temperature.

(5) Cold deck temperature.

(6) Zone temperatures (where shown).

(7) Space RH (where shown).

(8) Minimum space temperature during occupied periods.

(9) Maximum space temperature during occupied periods.

(10) Equipment constraints.

b. Program Outputs:

(1) Hot deck valve actuator control signal.

(2) Cold deck valve actuator control signal.

(3) Zone damper or mixing box actuator control output signal.

2.15.10.9 Reheat Coil Reset Program

The software shall select the zone with the least amount of heat required. The program shall reset the cold deck discharge temperature upward until it satisfies the zone with the lowest demand, or until the zone humidity control requirements cannot be met.

a. Program Inputs:

(1) Zone RH high limit.

(2) Zone temperature (where shown).

(3) Zone RH (where shown).

(4) Cold deck temperature.

(5) Reheat coil valve positions or proportional signals from primary elements.

(6) Minimum space temperature during occupied periods.

(7) Maximum space temperature during occupied periods.

(8) Equipment constraints.

b. Program Output: Cold deck valve actuator control signal.

2.15.10.10 Heating and Ventilating Unit Program

The software shall control hot water/steam coil valve position to maintain space/supply air temperatures for heating and ventilating units. This program shall be coordinated with the ventilation-recirculation program for damper control and the scheduled or optimum start-stop program for fan control.

a. Program Inputs

(1) Space temperature.
(2) Space temperature setpoint.
(3) Supply air temperature.
(4) Supply air temperature setpoint.

b. Program Outputs

(1) Heating or steam coil valve actuator control signal.
(2) Damper actuator control signal.

2.15.10.11 Air Volume Control Program

The software shall monitor supply and return/exhaust air flow volumes and modulate fan controls to maintain required air flow volumes and/or ratio or fixed differential of supply to return air flows. This program shall be coordinated with the ventilation-recirculation program and the economizer program for damper control and with static pressure control requirements for fan control.

a. Program Inputs

(1) Supply air flow.
(2) Return/exhaust air flow.
(3) Required supply air flow - high and low limits.
(4) Required return/exhaust air flow - high and low limits.
(5) Volume offset or ratio, as appropriate.

b. Program Outputs

(1) Supply fan volume control.
(2) Return/exhaust fan volume control.

2.15.10.12 Air Distribution Unitary Controller Software

Software shall be provided for the management and control of the air distribution terminal units. Software shall allow for operator definition of multiple air distribution terminal units as functional groups which may be treated as a single entity; monitoring, alarming and reporting of terminal unit parameters on an individual or group basis; and remote setpoint adjustment on an individual or group basis.

a. Functions:

(1) Volume control in response to temperature.
(2) Volume flow limits, minimum and maximum.
(3) Occupied and unoccupied operation with associated temperature and volume limits.
(4) Temperature setpoint override.

b. Program Inputs

(1) Space temperature.
(2) Space temperature setpoint.
(3) Space temperature setpoint limits.
(4) Supply airflow volume.
(5) Supply airflow volume high and low limits.

c. Program Outputs

(1) Supply volume control signal.
(2) Auxiliary fan start/stop signal.
(3) Supplemental heat control signal.

2.15.10.16 Condenser Water Temperature Reset Program

The software shall reset the condenser water temperature from a fixed temperature downward when the OA wet bulb temperature will produce lower condenser water temperature. Program shall be coordinated with the chiller control loop algorithms for chiller supply, return water temperatures and safety interlocks.

a. Program Inputs:

(1) Maximum condenser water operating temperature.
(2) Minimum condenser water operating temperature.
(3) Condenser water supply temperature.
(4) OA dry bulb temperature.
(5) OA RH.
(6) Condenser water cooling equipment thermal approach characteristics.
(7) Equipment constraints.

b. Program Output: Condenser water supply temperature setpoint control signal.

2.15.10.18 Hot Water OA Reset Program

The software shall reset the hot water temperature supplied by the boiler or converter in accordance with the OA temperature or other specified independent- dent variable. The hot water supply temperature shall be reset downward or upward from a fixed temperature proportionally, as a function of OA temperature or other specified independent variable.

a. Program Inputs

(1) Reset schedule.
(2) OA dry bulb temperature or other specified independent variable.
(3) Hot water supply temperature.
(4) Maximum hot water supply temperature.
(5) Minimum hot water supply temperature.
(6) Equipment constraints.

b. Program Output: Valve actuator control signal.

2.15.10.19 Boiler Monitoring and Control

The software shall remotely monitor and control boiler operation based on boiler operational data. The program shall monitor inputs and discontinue boiler operation if any monitored point exceeds a predetermined value or changes status incorrectly. The operator shall be able to add or delete individual program input points from the list of points that will discontinue boiler operation.

a. Program Inputs

(1) Fuel flow.
(2) Fuel pressure (natural gas).
(3) Fuel temperature (heated fuel oil).
(4) Flame status.
(5) Flue gas oxygen.
(6) Flue gas temperature.
(7) Make-up or feed water flow.
(8) Furnace draft.
(9) Flue gas carbon monoxide (for boilers over 20 million BTUs).
(10) Hot water flow.
(11) Hot water pressure.
(12) Hot water supply temperature.
(13) Hot water return temperature.
(14) Hot water BTUs.
(15) Steam flow.
(16) Steam pressure.
(17) Steam temperature.
(18) Steam BTUs.
(19) Feedwater temperature.
(20) Boiler drum level.

b. Program Outputs

(1) Boiler enable/disable control signal.
(2) Boiler enable/disable permission to boiler operator for manual control.
(3) Boiler efficiency.

2.15.10.20 Heat Recovery Boiler Efficiency and Monitoring

The software shall remotely monitor and calculate efficiency of heat recovery boiler operation. The program shall monitor inputs and alarm operator if any monitored point exceeds a predetermined value or changes status incorrectly.

a. Program Inputs

(1) Exhaust gas flow (from gas turbine generator) into boiler.
(2) Exhaust gas temperature (from gas turbine generator) into boiler.
(3) Flue gas oxygen.(stack)
(4) Flue gas temperature.(stack)
(5) Make-up flow.
(6) Furnace draft.
(7) Flue gas carbon monoxide (for boilers over 20 million BTUs).
(8) Hot water flow (hot water boilers).
(9) Hot water pressure (hot water boilers).
(10) Hot water supply temperature (hot water boilers).
(11) Hot water return temperature (hot water boilers).
(12) Hot water BTUs (hot water boilers).
(13) Steam flow (steam boilers).
(14) Steam pressure (steam boilers).
(15) Steam BTUs (steam boilers).
(16) Feedwater temperature (steam boilers).
(17) Boiler drum level (steam boilers).
(18) Steam temperature.
(19) Position of diverter valve.

b. Program Output: Heat recovery boiler efficiency

2.15.10.21 Hot Water Distribution Program

The software shall control the hot water distribution temperature to individual building zones. The zone hot water distribution temperature shall be reset downward or upward from a fixed temperature proportionally as a function of OA temperature or other specified independent variable by modulating the respective zone mixing valve. The zone pump shall be stopped when the OA temperature exceeds the specified setpoint. When parallel pumps are used, the software shall alternate pump operation and shall start the standby pump (after a time delay) upon failure of the operating pump.

a. Program Inputs

(1) Zone hot water distribution temperature.
(2) Reset schedule.
(3) OA dry bulb temperature or other specified independent variable.
(4) Maximum zone hot water distribution temperature.
(5) Zone pump status.
(6) Equipment constraints.

b. Program Outputs

(1) Zone mixing valve control.
(2) Zone pump start/stop signal(s).

2.15.10.22 Domestic Hot Water Generator Program

The software shall control the domestic hot water temperature by adjusting the hot water heating control valve.

a. Program Inputs

(1) Domestic hot water temperature.
(2) Domestic hot water temperature setpoint.

b. Program Output: Hot water heating control valve actuator control signal.

2.15.10.23 Lighting Control Program

The software shall turn lights on and off based on the time of day and the day of week, including holidays. The program shall generate additional commands at operator adjustable intervals to assure that lights are off (relay operated zoned lighting only).

a. Program Inputs

(1) Day of week-holiday.

(2) Time of day.

(3) Cooling and heating start-stop schedules.

(4) Equipment status.

(5) Times of day for additional off commands (where applicable).

b. Program Output: On/off signal.

PART 3 EXECUTION

3.1 GENERAL INSTALLATION CRITERIA

3.1.1 HVAC Control System

The HVAC control system shall be completely installed and ready for operation. Dielectric isolation shall be provided where dissimilar metals are used for connection and support. Penetrations through and mounting holes in the building exterior shall be made watertight. The HVAC control system installation shall provide clearance for control system maintenance by maintaining access space between coils, access space to mixed-air plenums, and other access space required to calibrate, remove, repair, or replace control system devices. The control system installation shall not interfere with the clearance requirements for mechanical and electrical system maintenance.

3.1.2 Software Installation

Software shall be loaded for an operational system, including databases for all points, operational parameters, and system, command, and application software. The Contractor shall provide original and backup copies of source, excluding the general purpose operating systems and utility programs furnished by computer manufacturers and the non-job-specific proprietary code furnished by the system manufacturer, and object modules for software on each type of media utilized, within 30 days of formal Government acceptance. In addition, a copy of individual floppy disks of software for each DDC panel shall be provided.

3.1.3 Device Mounting Criteria

Devices mounted in or on piping or ductwork, on building surfaces, in mechanical/electrical spaces, or in occupied space ceilings shall be installed in accordance with manufacturer's recommendations and as shown. Control devices to be installed in piping and ductwork shall be provided with required gaskets, flanges, thermal compounds, insulation, piping, fittings, and manual valves for shutoff, equalization, purging, and calibration. Strap-on temperature sensing elements shall not be used except as specified.

3.1.4 Wiring Criteria

Wiring external to control panels, including low-voltage wiring, shall be installed in metallic raceways. Wiring shall be installed without splices between control devices and DDC panels. Instrumentation grounding shall be installed as necessary to prevent ground loops, noise, and surges from adversely affecting operation of the system. Ground rods installed by the contractor shall be tested as specified in IEEE Std 142. Cables and conductor wires shall be tagged at both ends, with the identifier shown on the shop drawings. Electrical work shall be as specified in Section 16415 ELECTRICAL WORK, INTERIOR and as shown.

3.2 CONTROL SYSTEM INSTALLATION

3.2.1 Damper Actuators

Actuators shall not be mounted in the air stream. Multiple actuators operating a common damper shall be connected to a common drive shaft. Actuators shall be installed so that their action shall seal the damper to the extent required to maintain leakage at or below the specified rate and shall move the blades smoothly.

3.2.3 Room Instrument Mounting

Room instruments shall be mounted so that their sensing elements are 1.5 m above the finished floor unless otherwise shown. Temperature setpoint device shall be recess mounted.

3.2.4 Freezestats

For each 1.86 square meters of coil face area, or fraction thereof, a freezestat shall be provided to sense the temperature at the location shown. Manual reset freezestats shall be installed in approved, accessible locations where they can be reset easily. The freezestat sensing element shall be installed in a serpentine pattern.

3.2.5 Averaging Temperature Sensing Elements

Sensing elements shall have a total element minimum length equal to 3 meters per square meter of duct cross-sectional area.

3.2.6 Foundations and Housekeeping Pads

Foundations and housekeeping pads shall be provided for the HVAC control system air compressors.

3.2.7 Compressed Air Stations

The air compressor assembly shall be mounted on vibration eliminators, in accordance with ASME BPV VIII Div I for tank clearance. The air line shall be connected to the tank with a flexible pipe connector. Compressed air station specialties shall be installed with required tubing, including condensate tubing to a floor drain.

3.2.8 Duct Static Pressure Sensing Elements and Transmitters

The duct static pressure sensing element and transmitter sensing point shall be located at 75% to 100% of the distance between the first and last air terminal units.

3.2.9 Indication Devices Installed in Piping and Liquid Systems

Gauges in piping systems subject to pulsation shall have snubbers. Gauges for steam service shall have pigtail fittings with cock. Thermometers and temperature sensing elements installed in liquid systems shall be installed in thermowells.

3.2.10 Tubing

3.2.10.1 Control System Installation

The control system shall be installed so that pneumatic lines are not exposed to outside air temperatures. All tubes and tube bundles exposed to view shall be installed neatly in lines parallel to the lines of the building. Tubing between panels and actuators in mechanical/electrical spaces shall be routed so that the lines are easily traceable.

3.2.10.2 Pneumatic Lines In Mechanical/Electrical Spaces

In mechanical/electrical spaces, pneumatic lines shall be plastic tubing or copper tubing. Horizontal and vertical runs of plastic tubes or soft copper tubes shall be installed in raceways dedicated to tubing. Dedicated raceways and tubing not installed in raceways shall be supported every 6 feet for horizontal runs and every 8 feet for vertical runs.

3.2.10.3 Pneumatic Lines External To Mechanical/Electrical Spaces

Tubing external to mechanical/electrical spaces, when run in plenum ceilings, shall be soft copper with sweat fittings. Tubing not in plenum spaces shall be soft copper with sweat fittings or shall be plastic

tubing in raceways dedicated to tubing. Raceways and tubing not in raceways shall be supported every 8 feet.

3.2.10.4 Connection to Liquid and Steam Lines

Tubing for connection of sensing elements and transmitters to liquid and steam lines shall be [copper] [Series 300 stainless steel] with [brass compression] [stainless-steel compression] fittings.

3.2.10.5 Connection to Ductwork

Tubing for connection of sensing elements and transmitters to ductwork shall be plastic tubing.

3.2.10.6 Tubing in Concrete

Tubing in concrete shall be installed in rigid conduit. Tubing in walls containing insulation, fill, or other packing materials shall be installed in raceways dedicated to tubing.

3.2.10.7 Final Connection to Actuators

Final connections to actuators shall be plastic tubing 12 long and unsupported at the actuator.

3.3 CONTROL SEQUENCES OF OPERATION

3.3.1 General Requirements - HVAC Systems

These requirements shall apply to all primary HVAC systems unless modified herein. The sequences describe the actions of the control system for one direction of change in the HVAC process analog variable, such as temperature, humidity or pressure. The reverse sequence shall occur when the direction of change is reversed.

3.3.1.1 Supply Fan Operating

HVAC system outside air, return air, and relief air dampers shall function as described for specific modes of operation unless control of the dampers is assumed by the fire and smoke control system. Smoke dampers shall open before fans are allowed to start. Interlocked exhaust fans shall be stopped in the unoccupied and ventilation delay modes and their dampers shall be closed. Interlocked exhaust fans shall run in the occupied mode, and their dampers shall open. Cooling coil control valves and cooling coil circulating pumps shall function as described for the specific modes of operation unless their control is assumed by the freeze protection system. Heating coil valves shall be under control.

3.3.1.2 Supply Fan Not Operating

When an HVAC system is stopped, all interlocked fans shall stop,] the outside air and relief air dampers shall close, the return air damper shall open, all stages of direct-expansion cooling shall stop, the system shall pump down if it has a pump down cycle, humidification shall stop, and cooling coil valves for coils located indoors shall close to the coil. Cooling coil valves of units located outdoors shall open to the coil. Heating coil valves shall remain under control.

3.3.1.3 Hydronic Heating - Distribution Pump Operating

Hydronic heat-exchanger valves shall be under control.

3.3.1.4 Hydronic Heating - Distribution Pump Not Operating

Hydronic heat-exchanger valves shall close.

3.3.2 not used

3.3.3 Unit Heater and Cabinet Unit Heater

All Modes - A wall-mounted thermostat with an "AUTO-OFF" switch located as shown, shall cycle the fan to maintain its setpoint as shown when the switch is in the "AUTO" position. When the switch is in the "OFF" position, the fan shall be stopped.

3.3.4 Heating and Ventilating Unit

3.3.4.1 Occupied, Unoccupied, and Ventilation Delay Operating Modes

Ventilation delay mode timing shall start prior to the occupied mode timing. The DDC system shall prevent the outside air damper from opening. At the time shown, the DDC system shall place the system in the occupied mode. At the expiration of the ventilation delay mode timing period, the DDC system shall allow the outside air damper to open. At the time shown, the DDC system shall place the control system in the unoccupied mode of operation.

3.3.4.2 Outside Air, Return Air, and Relief Air Dampers

a. Occupied Mode - The outside air, return air, and relief air dampers shall be under space temperature and economizer control.

b. Unoccupied and Ventilation Delay Modes - The dampers shall return to their normal positions.

3.3.4.3 Supply Fan Control

a. Occupied and Ventilation Delay Modes - Supply fan shall start, and shall operate continuously.

b. Unoccupied Mode - The supply fan shall cycle according to the night setback schedule. The fan shall start and stop at the setpoints as shown.

3.3.4.4 Filter

The DDC panel shall monitor the differential pressure switch across the filter and shall provide an alarm when the pressure drop exceeds the setpoint.

3.3.4.5 Freeze Protection

All Modes - A freezestat, located as shown, shall stop the supply fan, cause the outside air, return air, and relief air dampers to return to their normal position, and shall initiate a low temperature alarm if the

temperature drops below the freezestat's setpoint. Return to the normal mode of operation shall require manual reset at the freezestat. The DDC system shall monitor the freezestat through auxiliary contacts and shall indicate an alarm condition when the freezestat trips.

3.3.4.6 Space Temperature Control

A space temperature sensing element and transmitter operating through the DDC system shall first gradually shut off the heating coil valve. After the heating coil valve is fully closed, the DDC system shall then gradually operate the outside air damper to admit outside air beyond the minimum quantity to maintain the setpoint as shown.

3.3.4.7 Emergency Fan Shutdown

All Modes - Smoke Detectors in the supply air and return air ductwork shall stop the supply fan and initiate a smoke alarm if smoke is detected at either location. Restarting the supply fan shall require manual reset at the smoke detector.

3.4 COMMISSIONING PROCEDURES

3.4.1 Evaluations

The Contractor shall make the observations, adjustments, calibrations, measurements, and tests of the control systems, set the time schedule, and make any necessary control system corrections to ensure that the systems function as described in the sequence of operation.

3.4.1.1 Item Check

Signal levels shall be recorded for the extreme positions of each controlled device. An item-by-item check of the sequence of operation requirements shall be performed using Steps 1 through 4 in the specified control system commissioning procedures. Steps 1, 2, and 3 shall be performed with the HVAC system shut down; Step 4 shall be performed after the HVAC systems have been started. External input signals to the DDC system (such as starter auxiliary contacts, and external systems) may be simulated in steps 1, 2, and 3. With each operational mode signal change, DDC system output relay contacts shall be observed to ensure that they function.

3.4.1.2 Weather Dependent Test Procedures

Weather dependent test procedures that cannot be performed by simulation shall be performed in the appropriate climatic season. When simulation is used, the actual results shall be verified in the appropriate season.

3.4.1.3 Two-Point Accuracy Check

A two-point accuracy check of the calibration of each HVAC control system sensing element and transmitter shall be performed by comparing the DDC system readout to the actual value of the variable measured at the sensing element and transmitter or airflow measurement station location. Digital indicating test instruments shall be used, such as digital thermometers, motor-driven psychrometers, and tachometers. The test instruments shall be at least twice as accurate as the specified sensing element-to-DDC system readout accuracy. The calibration of the test instruments shall be traceable to National

Institute Of Standards And Technology standards. The first check point shall be with the HVAC system in the shutdown condition, and the second check point shall be with the HVAC system in an operational condition. Calibration checks shall verify that the sensing element-to-DDC system readout accuracies at two points are within the specified product accuracy tolerances. If not, the device shall be recalibrated or replaced and the calibration check repeated.

3.4.1.4 Insertion and Immersion Temperatures

Insertion temperature and immersion temperature sensing elements and transmitter-to-DDC system readout calibration accuracy shall be checked at one physical location along the axis of the sensing element.

3.4.1.5 Averaging Temperature

Averaging temperature sensing element and transmitter-to-DDC system readout calibration accuracy shall be checked every 609.6 mm along the axis of the sensing element in the proximity of the sensing element, for a maximum of 10 readings. These readings shall then be averaged.

3.4.2 Space Temperature Controlled Perimeter Radiation

The heating medium shall be turned on, and the thermostat temperature setpoint shall be raised. The valve shall open. The thermostat temperature shall be lowered and the valve shall close. The thermostat shall be set at the setpoint shown.

3.4.3 Unit Heater and Cabinet Unit Heater

The "OFF/AUTO" switch shall be placed in the "OFF" position. Each space thermostat temperature setting shall be turned up so that it makes contact to turn on the unit heater fans. The unit heater fans shall not start. The "OFF/AUTO" switch shall be placed in the "AUTO" position. It shall be ensured that the unit heater fans start. Each space thermostat temperature setting shall be turned down, and the unit heater fans shall stop. The thermostats shall be set at their temperature setpoints. The results of testing of one of each type of unit shall be logged.

3.4.4 Not Used

3.4.6 Fan Coil Unit

The dual-temperature hydronic system shall be set to heating. Each space thermostat temperature setting shall be turned up so that it makes contact and turns the fan coil unit on. It shall be ensured that the fan coil unit fan starts and the valves open to flow through the coils. Each space thermostat temperature setting shall be turned down and it shall be ensured that the fan coil unit fans stop. It shall be ensured that the valves close to flow through the coils. The thermostats shall be set at their temperature setpoints.

3.4.8 Single Building Hydronic Heating with Hot Water Boiler

Steps for installation shall be as follows:

a. Step 1 - System Inspection: The HVAC system shall be observed in its shutdown condition. It shall be verified that power and main air are available where required.

b. Step 2 - Calibration Accuracy Check with HVAC System Shutdown: Readings shall be taken with a digital thermometer at each temperature sensing element location. Each temperature shall be read at the DDC controller, and the thermometer and DDC system readings logged. The calibration accuracy of the sensing element-to-DDC system readout for outside air temperature and system supply temperature shall be checked.

c. Step 3 - Actuator Range Adjustments: A signal shall be applied to the actuator through an operator entered value to the DDC system. The proper operation of the actuators and positioners for all valves shall be verified visually. The signal shall be varied from live zero to full range, and it shall be verified that the actuators travel from zero stroke to full stroke within the signal range. It shall be verified that all sequenced actuators move from zero stroke to full stroke in the proper direction, and move the connected device in the proper direction from one extreme position to the other.

d. Step 4 - Control System Commissioning:

(1) The two-point calibration sensing element-to-DDC system readout accuracy check for the outside air temperature shall be performed. Any necessary software adjustments to setpoints or parameters shall be made to achieve the outside air temperature schedule.

(2) The outside air temperature shall be simulated through an operator entered value to be above the setpoint. It shall be verified that pumps [_____] and boiler [_____] stop. A value shall be entered to simulate that the outside air temperature is below the setpoint as shown. It shall be verified that pumps [_____] start and boiler [_____] operates.

(3) The two-point calibration accuracy check of the sensing element-to-DDC system readout for the hydronic system supply temperature shall be performed. The supply temperature setpoint shall be set for the temperature schedule as shown. Signals of 8 ma and 16 ma shall be sent to the DDC system from the outside air temperature sensor, to verify that the supply temperature setpoint changes to the appropriate values.

(4) The control system shall be placed in the occupied mode. The calibration accuracy check of sensing element-to-DDC system readout shall be performed for each space temperature sensor and the values logged. Each space temperature setpoint shall be set as shown. The control system shall be placed in the unoccupied mode, and it shall be verified that each space temperature setpoint changes to the unoccupied mode setting.

3.4.9 Central Plant High Temperature Hot Water Hydronic Heating

Steps for installation shall be as follows:

a. Step 1 - System Inspection: The HVAC system shall be observed in its shutdown condition. It shall be verified that power and main air are available where required and that the converter valve is closed.

b. Step 2 - Calibration Accuracy Check with HVAC System Shutdown: Readings shall be taken with a digital thermometer at each temperature sensing element location. Each temperature shall be read at the DDC controller, and the thermometer and DDC system readings logged. The calibration accuracy

of the sensing element-to-DDC system readout for outside air temperature and system supply temperature shall be checked.

c. Step 3 - Actuator Range Adjustments: A signal shall be applied to the actuator through an operator entered value to the DDC system. The proper operation of the actuators and positioners for all valves shall be verified. The signal shall be varied from live zero to full range, and it shall be verified that the actuators travel from zero stroke to full stroke within the signal range. It shall be verified that all sequenced actuators move from zero stroke to full stroke in the proper direction, and move the connected device in the proper direction from one extreme position to the other.

d. Step 4 - Control System Commissioning:

(1) The two-point calibration sensing element-to-DDC system readout accuracy check for the outside air temperature shall be performed. Any necessary software adjustments shall be made to setpoints or parameters to achieve the outside air temperature schedule.

(2) The outside air temperature shall be simulated through an operator entered value to be above the setpoint. It shall be verified that pump [_____] stops and the high-temperature hot-water control valve closes. A value shall be entered to simulate that the outside air temperature is below the setpoint as shown. It shall be verified that pump [_____] starts.

(3) The two-point calibration accuracy check of the sensing element-to-DDC system readout for the hydronic system supply temperature shall be performed. The supply temperature setpoint shall be set for the temperature schedule as shown. Signals of 8 ma and 16 ma shall be sent to the DDC system from the outside air temperature sensor, to verify that the supply temperature setpoint changes to the appropriate values. A high temperature condition shall be initiated in the hydronic system supply line by lowering the thermostat setting. It shall be verified that the high-temperature hot water shutoff valve closes and an alarm is initiated. The thermostat shall be set at the setting shown, the safety circuit shall be manually reset, and it shall be verified that the shutoff valve opens and a return-to-normal signal is sent.

(4) The control system shall be placed in the occupied mode. The calibration accuracy check of sensing element-to-DDC system readout shall be performed for each space temperature sensor and the values logged. Each space temperature setpoint shall be set as shown. The control system shall be placed in the unoccupied mode, and it shall be verified that each space temperature setpoint changes to the unoccupied mode setting.

3.4.13 Heating and Ventilating Unit

Steps for installation are as follows:

a. Step 1 - System Inspection: The HVAC system shall be observed in its shutdown condition. The system shall be checked to see that power and main air are available where required, the outside air damper and relief air damper are closed, and the return air damper is open.

b. Step 2 - Calibration Accuracy Check with HVAC System Shutdown: Readings shall be taken with a digital thermometer at each temperature sensing element location. Each temperature shall be read at the DDC controller, and the thermometer and DDC system readings logged. The calibration accuracy of the sensing element-to-DDC system readout for space temperature shall be checked.

c. Step 3 - Actuator Range Adjustments: A signal shall be applied to the actuator through an operator entered value to the DDC system. The proper operation of the actuators and positioners for all dampers and valves shall be verified. The signal shall be varied from live zero to full range, and that the actuators travel from zero stroke to full stroke within the signal range shall be verified. It shall be verified that all sequenced and parallel-operated actuators move from zero stroke to full stroke in the proper direction, and move the connected device in the proper direction from one extreme position to the other.

d. Step 4 - Control System Commissioning:

(1) With the fan ready to start, the system shall be placed in the ventilation delay mode and in the occupied mode through operator entered values. It shall be verified that supply fan starts. It shall be verified that the outside air and relief air dampers are closed, the return air damper is open, and the heating coil valve is under control, by artificially changing the space temperature through operator entered values. The system shall be placed out of the ventilation delay mode, and it shall be verified that the outside air, return air, and relief air dampers come under control by simulating a change in space temperature.

(2) The control system shall be placed in the minimum outside air mode. It shall be verified that the outside air damper opens to minimum position.

(3) The calibration accuracy check of sensing element-to-DDC system readout for the space temperature shall be performed. The space temperature setpoint shall be set as shown.

(4) The control system shall be placed in the unoccupied mode, and it shall be verified that the HVAC system shuts down, and the control system assumes the specified shutdown conditions. The space temperature shall be artificially changed to below the night setback setpoint, and it shall be verified that the HVAC system starts; the space temperature shall be artificially changed to above the night setback setpoint, and it shall be verified that the HVAC system stops. The night setback temperature setpoint shall be set as shown.

(5) With the HVAC system running, a filter differential pressure switch input signal shall be simulated, at the device. It shall be verified that the filter alarm is initiated. The differential pressure switch shall be set at the setpoint as shown.

(6) With the HVAC system running, a freezestat trip input signal shall be simulated at the device. HVAC system shutdown shall be verified. It shall be verified that a low temperature alarm is initiated. The freezestat shall be set at the setpoint. The HVAC system shall be restarted by manual restart and it shall be verified that the alarm returns to normal.

(7) With the HVAC system running, a smoke detector trip input signal shall be simulated at each detector, and verification of control device actions and interlock functions as described in the Sequence of Operation shall be made. Simulation shall be performed without false-alarming any Life Safety systems. It shall be verified that the HVAC system shuts down and that the smoke detector alarm is initiated. The detectors shall be reset. The HVAC system shall be restarted by manual reset, and it shall be verified that the alarm signal is changed to a return-to-normal signal.

3.5 BALANCING, COMMISSIONING, AND TESTING

3.5.1 Coordination with HVAC System Balancing

Commissioning of the control system, except for tuning of controllers, shall be performed prior to or simultaneous with HVAC system balancing. The contractor shall tune the HVAC control system after all air system and hydronic system balancing has been completed, minimum damper positions set and a report has been issued.

3.5.2 Control System Calibration, Adjustments, and Commissioning

Control system commissioning shall be performed for each HVAC system, using test plans and procedures previously approved by the Government. The Contractor shall provide all personnel, equipment, instrumentation, and supplies necessary to perform commissioning and testing of the HVAC control system. All instrumentation and controls shall be calibrated and the specified accuracy shall be verified using test equipment with calibration traceable to NIST standards. Wiring shall be tested for continuity and for ground, open, and short circuits. Tubing systems shall be tested for leaks. Mechanical control devices shall be adjusted to operate as specified. HVAC control panels shall be pretested off-site as a functioning assembly ready for field connections, calibration, adjustment, and commissioning of the operational HVAC control system. Control parameters and logic (virtual) points including control loop setpoints, gain constants, and integral constraints, shall be adjusted before the system is placed on line. Communications requirements shall be as indicated. Written notification of any planned commissioning or testing of the HVAC Control systems shall be given to the Government at least 14 calendar days in advance.

3.5.3 Performance Verification Test

The Contractor shall demonstrate compliance of the HVAC control system with the contract documents. Using test plans and procedures previously approved by the Government, the Contractor shall demonstrate all physical and functional requirements of the project. The performance verification test shall show, step-by-step, the actions and results demonstrating that the control systems perform in accordance with the sequences of operation. The performance verification test shall not be started until after receipt by the Contractor of written permission by the Government, based on Government approval of the Commissioning Report and completion of balancing. The tests shall not be conducted during scheduled seasonal off periods of base heating and cooling systems.

3.5.4 Endurance Test

The endurance test shall be used to demonstrate the specified overall system reliability requirement of the completed system. The endurance test shall not be started until the Government notifies the Contractor in writing that the performance verification test is satisfactorily completed. The Government may terminate the testing at any time when the system fails to perform as specified. Upon termination of testing by the Government or by the Contractor, the Contractor shall commence an assessment period as described for Phase II. Upon successful completion of the endurance test, the Contractor shall deliver test reports and other documentation as specified to the Government prior to acceptance of the system.

a. Phase I (Testing). The test shall be conducted 24 hours per day, 7 days per week, for 15 consecutive calendar days, including holidays, and the system shall operate as specified. The Contractor shall make no repairs during this phase of testing unless authorized by the Government in writing.

b. Phase II (Assessment). After the conclusion of Phase I, the Contractor shall identify failures, determine causes of failures, repair failures, and deliver a written report to the Government. The report shall explain in detail the nature of each failure, corrective action taken, results of tests performed, and shall recommend the point at which testing should be resumed. After delivering the written report, the Contractor shall convene a test review meeting at the jobsite to present the results and recommendations to the Government. As a part of this test review meeting, the Contractor shall demonstrate that all failures have been corrected by performing appropriate portions of the performance verification test. Based on the Contractor's report and test review meeting, the Government may require that the Phase I test be totally or partially rerun. After the conclusion of any retesting which the Government may require, the Phase II assessment shall be repeated as if Phase I had just been completed.

3.5.5 Posted and Panel Instructions

Posted and Panel Instructions, showing the final installed conditions, shall be provided for each system. The posted instructions shall consist of laminated half-size drawings and shall include the control system schematic, equipment schedule, sequence of operation, wiring diagram, communication network diagram, and valve and damper schedules. The posted instructions shall be permanently affixed, by mechanical means, to a wall near the control panel. Panel instructions shall consist of laminated letter-size sheets and shall include a Routine Maintenance Checklist and as-built configuration check sheets. Panel instructions and one copy of the Operation and Maintenance Manuals, previously described herein, shall be placed inside each control panel or permanently affixed, by mechanical means, to a wall near the panel.

3.6 TRAINING

3.6.1 **Training Course Requirements**

A training course shall be conducted for operating staff members designated by the Contracting Officer in the maintenance and operation of the system, including specified hardware and software. The training period, for a total of 32 hours of normal working time, shall be conducted within 30 days after successful completion of the performance verification test. The training course shall be conducted at the project site. Audiovisual equipment and **six** sets of all other training materials and supplies shall be provided. A training day is defined as 8 hours of classroom instruction, including two 15 minute breaks and excluding lunchtime, Monday through Friday, during the daytime shift in effect at the training facility.

3.6.2 Training Course Content

For guidance in planning the required instruction, the Contractor shall assume that attendees will have a high school education or equivalent, and are familiar with HVAC systems. The training course shall cover all of the material contained in the Operating and Maintenance Instructions, the layout and location of each HVAC control panel, the layout of one of each type of unitary equipment and the locations of each, the location of each control device external to the panels, the location of the compressed air station, preventive maintenance, troubleshooting, diagnostics, calibration, adjustment, commissioning, tuning, and repair procedures. Typical systems and similar systems may be treated as a group, with instruction on the physical layout of one such system. The results of the performance verification test and the calibration, adjustment and commissioning report shall be presented as

benchmarks of HVAC control system performance by which to measure operation and maintenance effectiveness.

END OF SECTION

SECTION 15990

TESTING, ADJUSTING, AND BALANCING OF HVAC SYSTEMS

PART 1 GENERAL

1.1 REFERENCES

The publications listed below form a part of this specification to the extent referenced. The publications are referred to in the text by basic designation only.

ASSOCIATED AIR BALANCE COUNCIL (AABC)

AABC MN-1	(1989) National Standards for Testing and Balancing Heating, Ventilating, and Air Conditioning Systems

NATIONAL ENVIRONMENTAL BALANCING BUREAU (NEBB)

NEBB-01	(1991) Procedural Standards for Testing Adjusting Balancing of Environmental Systems

1.2 SUBMITTALS

Government approval is required for submittals with a "GA" designation; submittals having a "FIO" designation are for information only. The following shall be submitted in accordance with Section 01330 SUBMITTAL PROCEDURES:

SD-01 Data

TAB Related HVAC Submittals; FIO.

A list of the TAB Related HVAC Submittals, no later than 7 days after the approval of the TAB Specialist.

SD-04 Drawings

TAB Schematic Drawings and Report Forms; GA.

Three copies of the TAB Schematic Drawings and Report Forms, no later than 21 days prior to the start of TAB field measurements.

SD-06 Instructions

TAB Procedures; GA.

Proposed procedures for TAB, submitted with the TAB Schematic Drawings and Report Forms.

SD-07 Schedules

Systems Readiness Check; FIO.

Proposed date and time to begin the Systems Readiness Check, no later than 7 days prior to the start of the Systems Readiness Check.

TAB Execution; GA.

Proposed date and time to begin field measurements, making adjustments, etc., for the TAB Report, submitted with the Systems Readiness Check Report.

TAB Verification; GA.

Proposed date and time to begin the TAB Verification, submitted with the TAB Report.

SD-08 Statements

TAB Firm; GA.

Certification of the proposed TAB Firm's qualifications by either AABC or NEBB to perform the duties specified herein and in other related Sections, no later than 21 days after the Notice to Proceed. The documentation shall include the date that the Certification was initially granted and the date that the current Certification expires. Any lapses in Certification of the proposed TAB Firm or disciplinary action taken by AABC or NEBB against the proposed TAB Firm shall be described in detail.

TAB Specialist; GA.

Certification of the proposed TAB Specialist's qualifications by either AABC or NEBB to perform the duties specified herein and in other related Sections, no later than 21 days after the Notice to Proceed. The documentation shall include the date that the Certification was initially granted and the date that the current Certification expires. Any lapses in Certification of the proposed TAB Specialist or disciplinary action taken by AABC or NEBB against the proposed TAB Specialist shall be described in detail.

Instrument Calibration; FIO.

List of each instrument to be used during TAB, stating calibration requirements required or recommended by both the TAB Standard and the instrument manufacturer and the actual calibration history of the instrument, submitted with the TAB Procedures. The calibration history shall include dates calibrated, the qualifications of the calibration laboratory, and the calibration procedures used.

SD-09 Reports

Design Review Report; GA.

A copy of the Design Review Report, no later than 14 days after approval of the TAB Firm and the TAB Specialist.

Systems Readiness Check Report; GA.

A copy of completed checklists for each system, each signed by the TAB Specialist, at least 7 days prior to the start of TAB Execution. All items in the Systems Readiness Check Report shall be signed by the TAB Specialist and shall bear the seal of the Professional Society or National Association used as the TAB Standard.

TAB Report; GA.

Three copies of the completed TAB Reports, no later that 7 days after the execution of TAB. All items in the TAB Report shall be signed by the TAB Specialist and shall bear the seal of the Professional Society or National Association used as the TAB Standard.

TAB Verification Report; GA.

Three copies of the completed TAB Verification Report, no later that 7 days after the execution of TAB Verification. All items in the TAB Verification Report shall be signed by the TAB Specialist and shall bear the seal of the Professional Society or National Association used as the TAB Standard.

SD-13 Certificates

Ductwork Leak Testing; FIO.

A written statement signed by the TAB Specialist certifying that the TAB Specialist witnessed the Ductwork Leak Testing, it was successfully completed, and that there are no known deficiencies related to the ductwork installation that will prevent TAB from producing satisfactory results.

1.3 SIMILAR TERMS

In some instances, terminology differs between the Contract and the TAB Standard primarily because the intent of this Section is to use the industry standards specified, along with additional requirements listed herein to produce optimal results. The following table of similar terms is provided for clarification only. Contract requirements take precedent over the corresponding AABC or NEBB requirements where differences exist.

SIMILAR TERMS

Contract Term	AABC Term	NEBB Term
TAB Standard	National Standards for Testing and Balancing Heating, Ventilating, and Air Conditioning Systems	Procedural Standards for Testing Adjusting Balancing of Environmental Systems.
TAB Specialist	TAB Engineer	TAB Supervisor
Systems Readiness Check	Construction Phase Inspection Check & Preliminary	Field Readiness

Field Procedures.

1.4 TAB STANDARD

TAB shall be performed in accordance with the requirements of the standard under which the TAB Firm's qualifications are approved, i.e., AABC MN-1or NEBB-01, unless otherwise specified herein. All recommendations and suggested practices contained in the TAB Standard shall be considered mandatory. The provisions of the TAB Standard, including checklists, report forms, etc., shall, as nearly as practical, be used to satisfy the Contract requirements. The TAB Standard shall be used for all aspects of TAB, including qualifications for the TAB Firm and Specialist and calibration of TAB instruments. Where the instrument manufacturer calibration recommendations are more stringent than those listed in the TAB Standard, the manufacturer's recommendations shall be adhered to. All quality assurance provisions of the TAB Standard such as performance guarantees shall be part of this contract. For systems or system components not covered in the TAB Standard, TAB procedures shall be developed by the TAB Specialist. Where new procedures, requirements, etc., applicable to the Contract requirements have been published or adopted by the body responsible for the TAB Standard used (AABC or NEBB), the requirements and recommendations contained in these procedures and requirements shall be considered mandatory.

1.5 QUALIFICATIONS

1.5.1 TAB Firm

The TAB Firm shall be either a member of AABC or certified by the NEBB and certified in all categories and functions where measurements or performance are specified on the plans and specifications, including TAB of environmental systems, the performance of clean rooms and clean air devices, building systems commissioning, and the measuring of sound and vibration in environmental systems. The certification shall be maintained for the entire duration of duties specified herein. If, for any reason, the firm loses subject certification during this period, the Contractor shall immediately notify the Contracting Officer and submit another TAB Firm for approval. Any firm that has been the subject of disciplinary action by either the AABC or the NEBB within the five years preceding Contract Award shall not be eligible to perform any duties related to the HVAC systems, including TAB. All work specified in this Section and in other related Sections to be performed by the TAB Firm shall be considered invalid if the TAB Firm loses its certification prior to Contract completion and must be performed by an approved successor. These TAB services are to assist the prime Contractor in performing the quality oversight for which it is responsible. The TAB Firm shall be a subcontractor of the prime Contractor, and shall report to and be paid by the prime Contractor.

1.5.2 TAB Specialist

The TAB Specialist shall be either a member of AABC or an experienced technician of the Firm certified by the NEBB. The certification shall be maintained for the entire duration of duties specified herein. If, for any reason, the Specialist loses subject certification during this period, the Contractor shall immediately notify the Contracting Officer and submit another TAB Specialist for approval. Any individual that has been the subject of disciplinary action by either the AABC or the NEBB within the five years preceding Contract Award shall not be eligible to perform any duties related to the HVAC systems, including TAB. All work specified in this Section and in other related Sections performed by the TAB Specialist shall be considered invalid if the TAB Specialist loses its certification prior to Contract completion and must be performed by the approved successor.

1.6 TAB SPECIALIST RESPONSIBILITIES

All TAB work specified herein and in related sections shall be performed under the direct guidance of the TAB Specialist. The TAB Specialist shall participate in the commissioning process specified in Section 15995 COMMISSIONING OF HVAC SYSTEMS.

PART 2 PRODUCTS (NOT APPLICABLE)

PART 3 EXECUTION

3.1 DESIGN REVIEW

The TAB Specialist shall review the Contract Plans and Specifications and advise the Contracting Officer of any deficiencies that would prevent the HVAC systems from effectively operating in accordance with the sequence of operation specified or prevent the effective and accurate TAB of the system. The TAB Specialist shall provide a Design Review Report individually listing each deficiency and the corresponding proposed corrective action necessary for proper system operation.

3.2 TAB RELATED HVAC SUBMITTALS

The TAB Specialist shall prepare a list of the submittals from the Contract Submittal Register that relate to the successful accomplishment of all HVAC TAB. The submittals identified on this list shall be accompanied by a letter of approval signed and dated by the TAB Specialist when submitted to the Government. The TAB Specialist shall also ensure that the location and details of ports, terminals, connections, etc., necessary to perform TAB are identified on the submittals.

3.3 TAB SCHEMATIC DRAWINGS AND REPORT FORMS

A schematic drawing showing each system component, including balancing devices, shall be provided for each system. Each drawing shall be accompanied by a copy of all report forms required by the TAB Standard used for that system. Where applicable, the acceptable range of operation or appropriate setting for each component shall be included on the forms or as an attachment to the forms. The schematic drawings shall identify all testing points and cross reference these points to the report forms and procedures.

3.4 DUCTWORK LEAK TESTING

The TAB Specialist shall witness the Ductwork Leak Testing specified in Section 15895 AIR SUPPLY, DISTRIBUTION, VENTILATION, AND EXHAUST SYSTEM and approve the results as specified in Paragraph TAB RELATED HVAC SUBMITTALS.

3.5 TESTING, ADJUSTING, AND BALANCING

3.5.1 TAB Procedures

Step by step procedures for each measurement required during TAB Execution shall be provided. The procedures shall be oriented such that there is a separate section for each system. The procedures shall include measures to ensure that each system performs as specified in all operating modes, interactions

with other components (such as exhaust fans, kitchen hoods, fume hoods, relief vents, etc.) and systems, and with all seasonal operating differences, diversity, simulated loads, and pressure relationships required.

3.5.2 Systems Readiness Check

The TAB Specialist shall inspect each system to ensure that it is complete, including installation and operation of controls, and that all aspects of the facility that have any bearing on the HVAC systems, including installation of ceilings, walls, windows, doors, and partitions, are complete to the extent that TAB results will not be affected by any detail or touch-up work remaining. The TAB Specialist shall also verify that all items such as ductwork and piping ports, terminals, connections, etc., necessary to perform TAB shall be complete during the Systems Readiness Check.

3.5.3 Preparation of TAB Report

Preparation of the TAB Report shall begin only when the Systems Readiness Report has been approved. The Report shall be oriented so that there is a separate section for each system. The Report shall include a copy of the appropriate approved Schematic Drawings and TAB Related Submittals, such as pump curves, fan curves, etc., along with the completed report forms for each system. The operating points measured during successful TAB Execution and the theoretical operating points listed in the approved submittals shall be marked on the performance curves and tables. Where possible, adjustments shall be made using an "industry standard" technique which would result in the greatest energy savings, such as adjusting the speed of a fan instead of throttling the flow. Any deficiencies outside of the realm of normal adjustments and balancing during TAB Execution shall be noted along with a description of corrective action performed to bring the measurement into the specified range. If, for any reason, the TAB Specialist determines during TAB Execution that any Contract requirement cannot be met, the TAB Specialist shall immediately provide a written description of the deficiency and the corresponding proposed corrective action necessary for proper system operation to the Contracting Officer.

3.5.4 TAB Verification

The TAB Specialist shall recheck ten percent of the measurements listed in the Tab Report and prepare a TAB Verification Report. The measurements selected for verification and the individuals that witness the verification will be selected by the Contracting Officer's Representative (COR). The measurements will be recorded in the same manner as required for the TAB Report. All measurements that fall outside the acceptable operating range specified shall be accompanied by an explanation as to why the measurement does not correlate with that listed in the TAB Report and a description of corrective action performed to bring the measurement into the specified range. If over 20 percent of the measurements selected by the COR for verification fall outside of the acceptable operating range specified, the COR will select an additional 10 percent for verification. If over 20 percent of the total tested (including both test groups) fall outside of the acceptable range, the TAB Report shall be considered invalid and all contract TAB work shall be repeated beginning with the Systems Readiness Check.

3.5.5 Marking of Setting

Following approval of TAB Verification Report, the setting of all HVAC adjustment devices including valves, splitters, and dampers shall be permanently marked by the TAB Specialist so that adjustment can be restored if disturbed at any time.

3.5.6 Identification of Test Ports

The TAB Specialist shall permanently and legibly identify the location points of duct test ports. If the ductwork has exterior insulation, the identification shall be made on the exterior side of the insulation. All penetrations through ductwork and ductwork insulation shall be sealed to prevent air leakage or to maintain integrity of vapor barrier.

END OF SECTION

This page intentionally blank

SECTION 15995

COMMISSIONING OF HVAC SYSTEMS

PART 1 GENERAL

1.1 SUBMITTALS

Government approval is required for submittals with a "GA" designation; submittals with "FIO" designation are for information only. The following shall be submitted in accordance with Section 01330 SUBMITTAL PROCEDURES:

SD-01 Data

Commissioning Team; FIO.

List of team members who will represent the Contractor in the pre-commissioning checks and functional performance testing, at least 2 weeks prior to the start of pre-commissioning checks. Proposed revision to the list, prior to the start of the impacted work.

SD-06 Instructions

Test Procedures; FIO.

Detailed procedures for pre-commissioning checks and functional performance tests, at least 4 weeks prior to the start of pre-commissioning checks.

SD-07 Schedules

Test Schedule; GA.

Schedule for pre-commissioning checks and functional performance tests, at least 2 weeks prior to the start of pre-commissioning checks.

SD-09 Reports

Test Reports; GA.

Completed pre-commissioning checklists and functional performance test checklists organized by system and by subsystem and submitted as one package. The results of failed tests shall be included along with a description of the corrective action taken.

1.2 SEQUENCING AND SCHEDULING

The work described in this Section shall begin only after all work required in related Sections, including Section 15950 HEATING, VENTILATING, AND AIR CONDITIONING (HVAC) CONTROL SYSTEMS and Section 15990 TESTING, ADJUSTING AND BALANCING OF HVAC SYSTEMS,

has been successfully completed, and all test and inspection reports and operation and maintenance manuals required in these Sections have been submitted and approved.

PART 2 PRODUCTS (NOT APPLICABLE)

PART 3 EXECUTION

3.1 COMMISSIONING TEAM AND CHECKLISTS

The Contractor shall designate team members to participate in the pre-commissioning checks and the functional performance testing specified herein. In addition, the Government will be represented by a representative of the Contracting Officer, the Design Agent's Representative, and the Using Agency. The team members shall be as follows:

Designation	Function
Q	Contractor's Chief Quality Control Representative
M	Contractor's Mechanical Representative
E	Contractor's Electrical Representative
T	Contractor's Testing, Adjusting, and Balancing Representative
C	Contractor's Controls Representative

Representatives for the following may be available at the Government's option:

D	Design Agent's Representative
O	Contracting Officer's Representative
U	Using Agency's Representative

Each checklist shown in appendices A and B shall be completed by the commissioning team. Acceptance by each commissioning team member of each pre-commissioning checklist item shall be indicated by initials and date unless an "X" is shown indicating that participation by that individual is not required. Acceptance by each commissioning team member of each functional performance test checklist shall be indicated by signature and date.

3.2 TESTS

The pre-commissioning checks and functional performance tests shall be performed in a manner which essentially duplicates the checking, testing, and inspection methods established in the related Sections. Where checking, testing, and inspection methods are not specified in other Sections, methods shall be established which will provide the information required. Testing and verification required by this section shall be performed during the Commissioning phase. Requirements in related Sections are independent from the requirements of this Section and shall not be used to satisfy any of the requirements specified in this Section. The Contractor shall provide all materials, services, and labor required to perform the pre-commissioning checks and functional performance tests. A pre-commissioning check or functional performance test shall be aborted if any system deficiency prevents the successful completion of the test or if any participating non-Government commissioning team member of which participation is specified is not present for the test. The Contractor shall reimburse the Government for all costs associated with effort lost due to tests that are aborted. These costs shall include salary, travel costs and per diem (where applicable) for Government commissioning team members.

3.2.1 Pre-Commissioning Checks

Pre-commissioning checks shall be performed for the items indicated on the checklists in Appendix A. Deficiencies discovered during these checks shall be corrected and retested in accordance with the applicable contract requirements.

3.2.2 Functional Performance Tests

Functional performance tests shall be performed for the items indicated on the checklists in Appendix B. Functional performance tests shall begin only after all pre-commissioning checks have been successfully completed. Tests shall prove all modes of the sequences of operation, and shall verify all other relevant contract requirements. Tests shall begin with equipment or components and shall progress through subsystems to complete systems. Upon failure of any functional performance test checklist item, the Contractor shall correct all deficiencies in accordance with the applicable contract requirements. The checklist shall then be repeated until it has been completed with no errors.

APPENDIX A

PRE-COMMISSIONING CHECKLISTS

Pre-commissioning checklist - Piping

For Heating & Chilled Water Piping System

Checklist Item	Q	M	E	T	C	D	O	U
Installation								
a. Piping complete.	___	___	X	X	X	___	___	___
b. As-built shop drawings submitted.	___	___	X	X	X	___	___	___
c. Piping flushed and cleaned.	___	___	X	X	X	___	___	___
d. Strainers cleaned.	___	___	X	X	X	___	___	___
e. Valves installed as required.	___	___	X	___	X	___	___	___
f. Piping insulated as required.	___	___	X	X	X	___	___	___
g. Thermometers and gauges installed as required.	___	___	X	___	X	___	___	___
h. Verify operation of valves.	___	___	X	___	___	___	___	___
i. Air vents installed as specified.	___	___	X	X	X	___	___	___
j. Flexible connectors installed as specified	__	___	X	X	X	___	___	___
k. Verify that piping has been labeled and valves identified as specified.	___	___	X	___	___	___	___	___
Testing, Adjusting, and Balancing (TAB)								
a. Hydrostatic test complete.	___	___	X	___	X	___	___	___
b. TAB operation complete	___	___	X	___	X	___	___	___

Pre-commissioning Checklist - Ductwork

For Air Handlers:

Checklist Item	Q	M	E	T	C	D	O	U
Installation								
a. Ductwork complete.	___	___	X	___	X	___	___	___
b. As-built shop drawings submitted.	___	___	X	X	X	___	___	___
c. Ductwork leak test complete.	___	___	X	___	X	___	___	___
d. Fire dampers, smoke dampers, and access doors installed as required with installation of each verified by the specified team members initialing each location on a copy of the as-built drawings.	___	___	X	___	X	___	___	___
e. Ductwork insulated as required.	___	___	X	X	X	___	___	___
f. Thermometers and gauges installed as required.	___	___	X	X	___	X	___	___
g. Verify open/closed status of dampers.	___	___	X	___	X	___	___	___
h. Verify smoke dampers operation.	___	___	X	___	X	___	___	___
i. Flexible connectors installed as specified	__	___	X	X	X	___	___	___
Testing, Adjusting, and Balancing (TAB)								
a. TAB operation complete.	___	X	X	___	X	___	___	___

Pre-commissioning Checklist - Pumps

For Pump:

Checklist Item	Q	M	E	T	C	D	O	U
Installation								
a. Pumps grouted in place.	___	___	X	X	X	___	___	___
b. Pump vibration isolation devices functional	___	___	X	X	X	___	___	___
c. Pump/motor coupling alignment verified.	___	___	X	X	X	___	___	___
d. Piping system installed.	___	___	X	X	X	___	___	___
e. Piping system pressure tested.	___	___	X	X	X	___	___	___
f. Pump not leaking.	___	___	X	X	X	___	___	___
g. Field assembled couplings aligned to meet manufacturer's prescribed tolerances.	___	___	X	X	X	___	___	___
Electrical								
a. Power available to pump disconnect.	___	X	___	X	X	___	___	___
b. Pump rotation verified.	___	X	___	X	X	___	___	___
c. Control system interlocks functional.	___	X	___	X	___	___	___	___
d. Verify that power disconnect is located within sight of the unit it controls.	___	X	___	X	___	___	___	___
Testing, Adjusting, and Balancing (TAB)								
a. Pressure/temperature gauges installed.	___	___	X	__	X	___	___	___
b. Piping system cleaned.	___	___	X	X	X	___	___	___
c. Chemical water treatment complete.	___	___	X	X	X	___	___	___
d. Water balance complete.	___	X	X	__	X	___	___	___
e. Water balance with design maximum flow.	___	X	X	__	X	___	___	___
f. TAB Report submitted.	___	X	X	__	X	___	___	___

Pre-commissioning Checklist - Hot Water Boiler

For Boiler:

Checklist Item	Q	M	E	T	C	D	O	U
Installation								
a. Boiler flue installed.	___	___	X	X	X	___	___	___
b. Boiler hot water piping installed.	___	___	X	X	X	___	___	___
c. Boiler hot water piping tested.	___	___	X	X	X	___	___	___
d. Boiler makeup water piping installed.	___	___	X	X	X	___	___	___
e. Boiler fuel oil piping installed.	___	___	X	X	X	___	___	___
f. Boiler fuel oil piping tested.	___	___	X	X	X	___	___	___
g. Boiler gas piping installed.	___	___	X	X	X	___	___	___
h. Boiler gas piping tested.	___	___	X	X	X	___	___	___
i. Manufacturer's required maintenance clearance provided.	___	___	X	__	___	___	___	___
Startup								
a. Boiler system cleaned and filled with treated water.	___	___	X	X	X	___	___	___
b. Boiler safety/protection devices, including high temperature burner shut-off, low water cutoff, flame failure, pre and post purge, have been tested.	___	___	___	X	___	___	___	___
c. Verify that PRV rating conforms to boiler rating.	___	___	X	X	X	___	___	___
d. Boiler water treatment system functional.	___	___	X	X	X	___	___	___
e. Boiler startup and checkout complete.	___	___	X	X	___	___	___	___
f. Combustion efficiency demonstrated.	___	___	X	X	X	___	___	___

Electrical

Verify that power disconnect is located within sight of the unit served.	___	X	___	X	X	___	___	___

Controls

a. Hot water pump interlock installed.	___	X	___	X	___	___	___	___
b. Hot water pump interlock tested.	___	X	___	X	___	___	___	___
c. Hot water heating system balanced.	___	___	X	__	___	___	___	___
d. Hot water heating controls operational.	___	X	X	X	___	___	___	___

Pre-commissioning Checklist – Heating & Ventilating Unit (HV-3, MAU-1)

For Fan Coil Unit:

Checklist Item	Q	M	E	T	C	D	O	U
Installation								
a. Vibration isolation devices installed.	___	___	X	X	X	___	___	___
b. Access doors/removable panels are operable and sealed.	___	___	X	__	X	___	___	___
c. Casing undamaged.	___	___	X	X	X	___	___	___
d. Insulation undamaged.	___	___	X	X	X	___	___	___
f. Fan belt adjusted.	___	___	X	__	X	___	___	___
g. Any damage to coil fins has been repaired.	__	___	X	__	X	___	___	___
h. Manufacturer's required maintenance clearance provided.	___	___	X	X	X	___	___	___
Electrical								
a. Power available to unit disconnect.	___	X	___	X	___	___	___	___
b. Power available to unit control panel.	___	X	___	X	___	___	___	___
c. Proper motor rotation verified.	___	___	___	__	X	___	___	___
d. Verify that power disconnect is located within sight of the unit it controls.	___	X	___	X	___	___	___	___
e. Power available to electric heating coil.	X	X	X	X	X	___	___	___
Coils								
c. Hot water piping properly connected.	___	___	X	X	X	___	___	___
d. Hot water piping pressure tested.	___	___	X	__	X	___	___	___
Controls								
a. Control valves/actuators properly installed.	___	___	X	__	___	___	___	___
b. Control valves/actuators operable.	___	___	X	X	___	___	___	___

c. Verify proper location and installation of thermostat.	___	___	X	__	___	___	___	___

Testing, Adjusting, and Balancing (TAB)

a. Construction filters removed and replaced.	__	___	X	__	X	___	___	___
b. TAB results +10%/-0% of L/s shown on drawings	___	X	X	__	X	___	___	___
c. TAB Report submitted.	___	X	X	__	X	___	___	___

Pre-commissioning Checklist - Unit Heater

For Unit Heater:

Checklist Item	Q	M	E	T	C	D	O	U
Installation								
a. Hot water piping properly connected.	___	___	X	__	X	___	___	___
b. Hot water piping pressure tested.	___	___	X	__	X	___	___	___
c. Air vent installed on hot water coil with shutoff valve as specified.	___	___	X	X	X	___	___	___
d. Any damage to coil fins has been repaired.	__	___	X	X	X	___	___	___
e. Manufacturer's required maintenance/ operational clearance provided.	___	___	X	X	X	___	___	___
Electrical								
a. Power available to unit disconnect.	___	___	___	X	___	___	___	___
b. Proper motor rotation verified.	___	___	___	X	X	___	___	___
c. Verify that power disconnect is located within sight of the unit it controls.	___	___	___	X	___	___	___	___
Controls								
a. Control valves properly installed.	___	___	X	__	___	___	___	___
b. Control valves operable.	___	___	X	X	___	___	___	___
c. Verify proper location and installation of thermostat.	___	___	X	__	___	___	___	___
Testing, Adjusting, and Balancing (TAB)								
a. TAB Report submitted.	___	___	X	__	X	___	___	___

Pre-commissioning Checklist - Exhaust Fan

For Exhaust Fan:

Checklist Item	Q	M	E	T	C	D	O	U
Installation								
a. Fan belt adjusted.	___	___	X	X	X	___	___	___
Electrical								
a. Power available to fan disconnect.	___	___	___	X	___	___	___	___
b. Proper motor rotation verified.	___	___	___	__	X	___	___	___
c. Verify that power disconnect is located within sight of the unit it controls.	___	___	___	X	___	___	___	___
Controls								
a. Control interlocks properly installed.	___	X	___	X	___	___	___	___
b. Control interlocks operable.	___	___	___	X	___	___	___	___
c. Dampers/actuators properly installed.	___	___	X	__	___	___	___	___
d. Dampers/actuators operable.	___	___	X	__	___	___	___	___
e. Verify proper location and installation of thermostat.	___	___	X	__	___	___	___	___
Testing, Adjusting, and Balancing (TAB)								
a. TAB results +10%/-0% to L/s shown on drawings	___	X	X	__	X	___	___	___
b. TAB Report submitted.	___	X	X	__	X	___	___	___

Pre-commissioning Checklist - HVAC System Controls

For HVAC System:

Checklist Item	Q	M	E	T	C	D	O	U
Installation								
a. As-built shop drawings submitted.	___	___	X	X	___	___	___	___
b. Layout of control panel matches drawings.	___	___	X	X	___	___	___	___
c. Framed instructions mounted in or near control panel.	___	X	X	X	___	___	___	___
d. Components properly labeled (on inside and outside of panel).	___	X	X	X	___	___	___	___
e. Control components piped and/or wired to each labeled terminal strip.	___	X	X	X	___	___	___	___
f. EMCS connection made to each labeled terminal strip as shown.	___	X	X	X	___	___	___	___
g. Control wiring and tubing labeled at all terminations, splices, and junctions.	___	X	X	X	___	___	___	___
h. Shielded wiring used on electronic sensors.	__	__	X	X	___	___	___	___
i. Air dryer installed as specified.	___	X	X	X	___	___	___	___
j. Water drain installed as specified.	___	X	X	X	___	___	___	___
Main Power and Control Air								
a. 110 volt AC power available to panel.	___	___	___	X	___	___	___	___
b. 140 kPa compressed air available to panel.	___	___	X	X	___	___	___	___
Testing, Commissioning, and Balancing								
a. Testing, Commissioning, and Balancing Report submitted.	___	___	X	__	___	___	___	___

Pre-commissioning Checklist - Single Zone Air Handling Unit (HV-1A, -1B, -2)

For Air Handling Unit:

Checklist Item	Q	M	E	T	C	D	O	U
Installation								
a. Vibration isolation devices installed.	__	___	X	X	X	___	___	___
b. Inspection and access doors are operable and sealed	__	___	X	__	X	___	___	___
c. Casing undamaged	__	___	X	X	X	___	___	___
d. Insulation undamaged.	__	___	X	X	X	___	___	___
e. Condensate drainage is unobstructed.	__	___	X	X	X	___	___	___
f. Fan belt adjusted.	__	___	X	__	X	___	___	___
g. Any damage to coil fins has been repaired.	__	__	X	__	X	___	___	___
h. Manufacturer's required maintenance clearance provided	__	___	X	X	X	___	___	___
Electrical								
a. Power available to unit disconnect.	__	___	___	X	X	___	___	___
b. Power available to unit control panel.	__	___	___	X	___	___	___	___
c. Proper motor rotation verified.	___	___	___	X	X	___	___	___
d. Verify that power disconnect is located within sight of the unit it controls.	___	___	___	X	X	___	___	___
e. Power available to electric heating coil.	___	___	___	X	___	___	___	___
Coils								
c. Hot water piping properly connected.	___	___	X	__	___	___	___	___
d. Hot water piping pressure tested.	___	___	X	X	___	___	___	___
e. Air vents installed on water coils with shutoff valves as specified.	___	___	X	X	X	___	___	___
f. Any damage to coil fins has been repaired.	___	___	X	__	X	___	___	___

Controls

a.	Control valves/actuators properly installed.	___	___	X	__	___	___	___	___
b.	Control valves/actuators operable.	___	___	X	__	___	___	___	___
c.	Dampers/actuators properly installed.	___	___	X	__	___	___	___	___
d.	Dampers/actuators operable.	___	___	X	__	___	___	___	___
e.	Verify proper location and installation of thermostat.	___	___	X	__	___	___	___	___

Testing, Adjusting, and Balancing (TAB)

a.	Construction filters removed and replaced.	___	___	X	__	X	___	___	___
b.	TAB results +10%/-0% L/s shown on drawings.	___	___	X	__	X	___	___	___
c.	TAB Report submitted.	___	___	X	__	X	___	___	___

Pre-commissioning Checklist - Energy Recovery System

For Energy Recovery System:

Checklist Item	Q	M	E	T	C	D	O	U
Installation								
a. Recovery system piping installed.	___	___	X	__	X	___	___	___
b. Recovery system piping tested.	___	___	X	X	X	___	___	___
c. Air vent installed as specified.	___	___	X	X	X	___	___	___
d. Manufacturer's required maintenance clearance provided.	___	___	X	X	X	___	___	___
Startup								
a. Recovery system piping cleaned and filled.	___	___	X	X	X	___	___	___
b. Converter startup and checkout complete.	___	___	X	X	X	___	___	___
Controls								
a. Control valves/actuators properly installed.	___	___	X	X	___	___	___	___
b. Control valves/actuators operable.	___	___	X	X	___	___	___	___
Blowers (F-1 & EF-7):								
Installation								
a. Vibration isolation devices installed.	__	___	X	X	X	___	___	___
b. Inspection and access doors are operable and sealed.	__	___	X	__	X	___	___	___
c. Casing undamaged.	__	___	X	X	X	___	___	___
d. Insulation undamaged.	__	___	X	X	X	___	___	___
e. Fan belt adjusted.	__	___	X	__	X	___	___	___
g. Manufacturer's required maintenance clearance provided.	__	___	X	X	X	___	___	___

	Electrical								
a.	Power available to unit disconnect.	___	___	___	X	X	___	___	___
b.	Power available to unit control panel.	___	___	___	X	___	___	___	___
c.	Proper motor rotation verified.	___	___	___	X	X	___	___	___
d.	Verify that power disconnect is located within sight of the unit it controls.	___	___	___	X	X	___	___	___
	Controls								
a.	Control valves/actuators properly installed.	___	___	X	__	___	___	___	___
b.	Control valves/actuators operable.	___	___	X	__	___	___	___	___
c.	Dampers/actuators properly installed.	___	___	X	__	___	___	___	___
d.	Dampers/actuators operable.	___	___	X	__	___	___	___	___
e.	Verify proper location and installation of thermostat.	___	___	X	__	___	___	___	___
	Testing, Adjusting, and Balancing (TAB)								
a.	Construction filters removed and replaced.	___	___	X	__	X	___	___	___
b.	TAB results +10%/-0% L/s shown on drawings.	___	___	X	__	X	___	___	___
c.	TAB Report submitted.	___	___	X	__	X	___	___	___

APPENDIX B

FUNCTIONAL PERFORMANCE TESTS CHECKLISTS

Functional Performance Test Checklist - Pumps

For Pump:

Prior to performing this checklist, ensure that for closed loop systems, system is pressurized and the make-up water system is operational or, for open loop systems, that the sumps are filled to the proper level.

1. Activate pump start using control system commands (all possible combination, on/auto, etc.). ON_____ AUTO_____ OFF_____

a. Verify pressure drop across strainer:

Strainer inlet pressure _____ kPa
Strainer outlet pressure _____ kPa

b. Verify pump inlet/outlet pressure reading, compare to Testing, Adjusting, and Balancing (TAB) Report, pump design conditions, and pump manufacturer's performance.

	DESIGN	TAB	ACTUAL
Pump inlet pressure (kPa)	_____	_____	_____
Pump outlet pressure (kPa)	_____	_____	_____

c. Operate pump at shutoff and at 100 percent of designed flow when all components are in full flow. Plot test readings on pump curve and compare results against readings taken from flow measuring devices.

	SHUTOFF	100 percent
Pump inlet pressure (kPa)	_____	_____
Pump outlet pressure	_____	_____
Pump flow rate (L/s)	_____	_____

d. Operate pump at shutoff and at minimum flow or when all components are in full by-pass. Plot test readings on pump curve and compare results against readings taken from flow measuring devices.

	SHUTOFF	100 percent
Pump inlet pressure (kPa)	_____	_____
Pump outlet pressure	_____	_____
Pump flow rate (L/s)	_____	_____

2. Verify motor amperage each phase and voltage phase to phase and phase to ground for both the full flow and the minimum flow conditions.

a. Full flow:

	PHASE 1	PHASE 2	PHASE 3
Amperage	_____	_____	_____
Voltage		_____	_____
Voltage		_____	
Voltage to ground	_____	_____	_____

b. Minimum flow:

	PHASE 1	PHASE 2	PHASE 3
Amperage	_____	_____	_____
Voltage		_____	_____
Voltage		_____	
Voltage to ground	_____	_____	_____

3. Unusual vibration, noise, etc.

_____

_____

4. Certification: We the undersigned have witnessed the above functional performance tests and certify that the item tested has met the performance requirements in this section of the specifications.

Signature and Date

Contractor's Chief Quality Control Representative _____

Contractor's Mechanical Representative _____

Contractor's Electrical Representative _____

Contractor's Testing, Adjusting and Balancing Representative _____

Contractor's Controls Representative _____

Contracting Officer's Representative _____

Using Agency's Representative _____

Functional Performance Test Checklist - Air Handling Unit (HV-1A, -1B, -2)

For Air Handling Unit:

Ensure that a slight negative pressure exists on inboard side of the outside air dampers throughout the operation of the dampers. Modulate OA, RA, and EA dampers from fully open to fully closed positions.

1. Functional Performance Test: Contractor shall verify operation of air handling unit as per specification including the following:

a. The following shall be verified when the supply and return fans operating mode is initiated:

(1) All dampers in normal position. _____

(2) All valves in normal position. _____

(3) System safeties allow start if safety conditions are met. _____

b. Occupied mode of operation - economizer de-energized.

(1) Outside air damper at minimum position. _____

(2) Return air damper open. _____

(3) Relief air damper at minimum position. _____

(4) Chilled water control valve modulating to maintain cold deck supply air temperature set point. _____

(5) Hot water control valve modulating to maintain hot deck supply air temperature set point input from outside air temperature controller. _____

c. Occupied mode of operation - economizer energized.

(1) Outside air damper modulates to maintain mixed air temperature set point. _____

(2) Relief air damper modulates with outside air damper according to sequence of operation. _____

(3) Chilled water control valve modulating to maintain cold deck supply air temperature set point. _____

(4) Hot water control valve modulating to maintain hot deck supply air temperature set point input from outside air temperature controller. _____

d. Unoccupied mode of operation

(1) All dampers in normal position. _____

(2) Verify low limit space temperature is maintained as specified in sequence of operation. _____

e. The following shall be verified when the supply and return fans off mode is initiated:

(1) All dampers in normal position. _____

(2) All valves in normal position. _____

(3) Fan de-energizes. _____

f. Verify zone damper operation by varying zone thermostat set points from cooling set point to heating set point and returning to cooling set point. _____

g. Verify safety shut down initiated by smoke detectors. _____

h. Verify safety shut down initiated by low temperature protection thermostat. _____

2. Certification: We the undersigned have witnessed the above functional performance tests and certify that the item tested has met the performance requirements in this section of the specifications.

Signature and Date

Contractor's Chief Quality Control Representative _____

Contractor's Mechanical Representative _____

Contractor's Electrical Representative _____

Contractor's Testing, Adjusting and Balancing Representative _____

Contractor's Controls Representative _____

Contracting Officer's Representative _____

Using Agency's Representative _____

Functional Performance Test Checklist - Hot Water Boiler

For Boiler:

1. Functional Performance Test: Contractor shall demonstrate operation of hot water system as per specifications including the following: Start building heating equipment to provide load for boiler. Activate controls system boiler start sequence as follows.

a. Start hot water pump and establish hot water flow. Verify boiler hot water proof-of-flow switch operation. _____

b. Verify control system energizes boiler start sequence. _____

c. Verify boiler senses hot water temperature below set point and control system activates boiler start. _____

d. Shut off building heating equipment to remove load on hot water system. Verify boiler shutdown sequence is initiated and accomplished after load is removed. _____

2. Verify boiler inlet/outlet pressure reading, compare to Test and Balance (TAB) Report, boiler design conditions, and boiler manufacturer's performance data.

	DESIGN	TAB	ACTUAL
Boiler inlet pressure (kPa)	_____	_____	_____
Boiler outlet pressure (kPa)	_____	_____	_____
Boiler flow rate (L/s)	_____	_____	_____
Flue-gas temperature at boiler outlet		_____	_____
Percent carbon dioxide in flue-gas		_____	_____
Draft at boiler flue-gas exit		_____	_____
Draft or pressure in furnace		_____	_____
Stack emission pollutants concentration	_____	_____	_____
Fuel type	_____	_____	_____
Combustion efficiency	_____	_____	_____

3. Record the following information:

Ambient temperature	_____	degrees C
Entering hot water temperature	_____	degrees C
Leaving hot water temperature	_____	degrees C

4. Verify temperatures in item 3 are in accordance with the reset schedule. _____

5. Verify proper operation of boiler safeties. _____

6. Unusual vibration, noise, etc.

_____

_____

7. Visually check refractory for cracks or spalling and refractory and tubes for flame impingement. _____

8. Certification: We the undersigned have witnessed the above functional performance tests and certify that the item tested has met the performance requirements in this section of the specifications.

Signature and Date

Contractor's Chief Quality Control Representative _____

Contractor's Mechanical Representative _____

Contractor's Electrical Representative _____

Contractor's Testing, Adjusting and Balancing Representative _____

Contractor's Controls Representative _____

Contracting Officer's Representative _____

Using Agency's Representative _____

Functional Performance Test Checklist – Heating Ventilating Units (HV-3 & MAU-1)

The Contracting Officer will select fan coil units to be spot-checked during the functional performance test. The number of terminals shall not exceed 10.

1. Functional Performance Test: Contractor shall demonstrate operation of selected fan coils as per specifications including the following:

a. Heating fan coils:

(1) Verify fan coil unit response to room temperature set point adjustment. Changes to be cooling set point to heating set point and return to cooling set point. _____

(2) Check blower fan air flow.
Check blower fan air flow. _____ L/s

(3) Check heating coil water flow.
Check heating coil water flow. _____ L/s

(8) Verify proper operation of heating water control valve. _____

(9) Check heating mode inlet air temperature.
Check heating mode inlet air temperature. _____ degrees C

(10) Check heating mode outlet air temperature.
Check heating mode outlet air temperature. _____ degrees C

2. Certification: We the undersigned have witnessed the above functional performance tests and certify that the item tested has met the performance requirements in this section of the specifications.

Signature and Date

Contractor's Chief Quality Control Representative _____

Contractor's Mechanical Representative _____

Contractor's Electrical Representative _____

Contractor's Testing, Adjusting and Balancing Representative _____

Contractor's Controls Representative _____

Contracting Officer's Representative _____

Using Agency's Representative _____

Functional Performance Test Checklist - Unit Heaters

The Contracting Officer will select unit heaters to be spot-checked during the functional performance test. The number of terminals shall not exceed 10.

1. Functional Performance Test: Contractor shall demonstrate operation of selected unit heaters as per specifications including the following:

a. Verify unit heater response to room temperature set point adjustment. Changes to be heating set point to heating set point minus 10 degrees and return to heating set point. _____

b. Check blower fan speed. _____rpm

c. Check heating mode inlet air temperature. Check heating mode inlet air temperature. _____ degrees C

d. Check heating mode outlet air temperature. Check heating mode outlet air temperature. _____ degrees C

2. Certification: We the undersigned have witnessed the above functional performance tests and certify that the item tested has met the performance requirements in this section of the specifications.

Signature and Date

Contractor's Chief Quality Control Representative _____

Contractor's Mechanical Representative _____

Contractor's Electrical Representative _____

Contractor's Testing, Adjusting and Balancing Representative _____

Contractor's Controls Representative _____

Contracting Officer's Representative _____

Using Agency's Representative _____

Functional Performance Test Checklist - HVAC Controls

For HVAC System:

The Contracting Officer will select HVAC control systems to undergo functional performance testing. The number of systems shall not exceed 10.

1. Functional Performance Test: Contractor shall verify operation of HVAC controls by performing the following tests:

a. Verify that controller is maintaining the set point by manually measuring the controlled variable with a thermometer, sling psychrometer, inclined manometer, etc.

b. Verify sensor/controller combination by manually measuring the controlled medium. Take readings from control panel display and compare readings taken manually. Record all readings.

Sensor _____
Manual measurement _____
Panel reading value _____

c. Verify system stability by changing the controller set point as follows:

(1) Air temperature - 10 degrees C

(2) Water temperature - 10 degrees C

(3) Static pressure - 10 percent of set point

The control system shall be observed for 10 minutes after the change in set point. Instability or excessive hunting will be unacceptable.

d. Verify interlock with other HVAC controls.

e. Verify interlock with fire alarm control panel.

g. Change controller set point 10 percent with EMCS and verify correct response.

2. Verify that operation of control system conforms to that specified in the sequence of operation.

3. Certification: We the undersigned have witnessed the above functional performance tests and certify that the item tested has met the performance requirements in this section of the specifications.

Signature and Date

Contractor's Chief Quality Control Representative _____

Contractor's Mechanical Representative _____

Contractor's Electrical Representative _____

Contractor's Testing, Adjusting and Balancing Representative
_____

Contractor's Controls Representative _____

Contractor's Officer's Representative _____

Using Agency's Representative _____

Functional Performance Test Checklist - Energy Recovery System

For Energy Recovery System:

1. Functional Performance Test: Contractor shall demonstrate operation of energy recovery system as per specifications including the following: Start equipment to provide energy source for recovery system.

a. Verify energy source is providing recoverable energy. _____

c. Verify that recovery system deactivates when recoverable energy is no longer available. _____

2. Verify recovery system inlet/outlet readings, compare to design conditions and manufacturer's performance data.

	Design	Actual
Primary loop inlet temp (degrees C)	_____	_____
Primary loop outlet temp (degrees C)	_____	_____
Primary loop flow rate	_____	_____
Secondary loop inlet temp (degrees C)	_____	_____
Secondary loop outlet temp (degrees C)	_____	_____
Energy recovered kJ's)	_____	_____

3. Check and report unusual vibration, noise, etc.

_____

_____

4. Certification: We the undersigned have witnessed the above functional performance tests and certify that the item tested has met the performance requirements in this section of the specifications.

Signature and Date

Contractor's Chief Quality Control Representative_____

Contractor's Mechanical Representative _____

Contractor's Electrical Representative _____

Contractor's Testing , Adjusting and Balancing Representative
_____

Contractor's Controls Representative _____

Contractor's Officer's Representative _____

Using Agency's Representative _____

END OF SECTION

SECTION 16070

SEISMIC PROTECTION FOR ELECTRICAL EQUIPMENT

PART 1 GENERAL

1.1 REFERENCES

The publications listed below form a part of this specification to the extent referenced. The publications are referred to in the text by basic designation only.

AMERICAN STANDARDS FOR TESTING AND MATERIALS (ASTM)

ASTM E 580	(1996) Application of Ceiling Suspension Systems for Acoustical Tile and Lay-in Panels in Areas Requiring Moderate Seismic Restraint

COE TECHNICAL INSTRUCTIONS (TI)

TI 809-04	(1998) Seismic Design for Buildings

UNDERWRITERS LABORATORIES (UL)

UL 1570	(1995; Rev thru Jun 1997) Fluorescent Lighting Fixtures
UL 1571	(1995; Rev thru Jun 1997) Incandescent Lighting Fixtures

1.2 SYSTEM DESCRIPTION

1.2.1 General Requirements

The requirements for seismic protection measures described in this section shall be applied to the electrical equipment and systems listed below. Structural requirements shall be in accordance with Section 13080 SEISMIC PROTECTION FOR MECHANICAL AND ELETRICAL MISCELLANEOUS EQUIPMENT.

1.2.2 Electrical Equipment

Electrical equipment shall include the following items to the extent required on the drawings or in other sections of these specifications:

Control Panels
Light Fixtures
Transformers
Switchboards (Floor Mounted)

1.2.3 Electrical Systems

The following electrical systems shall be installed as required on the drawings and other sections of these specifications and shall be seismically protected in accordance with this specification: Fire Alarm System, Lighting System, and Communications System

1.2.4 Contractor Designed Bracing

The Contractor shall design the bracing in accordance with TI 809-4 and additional data furnished by the Contracting Officer. Resistance to lateral forces induced by earthquakes shall be accomplished without consideration of friction resulting from gravity loads. TI 809-04 uses parameters for the building, not for the equipment in the building; therefore, corresponding adjustments to the formulas shall be required. Loadings determined using TI 809-04 are based on strength design; therefore, the AISC LRFP specifications shall be used for the design. The bracing for the following electrical equipment and systems shall be developed by the Contractor: lighting fixtures communications racks switchboards.

1.2.5 Conduits Requiring No Special Seismic Restraints

Seismic restraints may be omitted from electrical conduit less than 63mm (2-1/2 inches) trade size and. All other interior conduit, shall be seismically protected as specified.

1.3 SUBMITTALS

Government approval is required for submittals with a "GA" designation; submittals having an "FIO" designation are for information only. The following shall be submitted in accordance with Section 01330 SUBMITTAL PROCEDURES:

SD-01 Data

Lighting Fixtures in Buildings; GA. Equipment Requirements; GA.

Copies of the design calculations with the detail drawings. Calculations shall be stamped by a registered engineer and shall verify the capability of structural members to which bracing is attached for carrying the load from the brace.

Contractor Designed Bracing; GA.

Copies of the Design Calculations with the Drawings. Calculations shall be approved, certified, stamped and signed by a Registered Professional Engineer. Calculations shall verify the capability of structural members to which bracing is attached for carrying the load from the brace.

SD-04 Drawings

Lighting Fixtures in Buildings; FIO. Equipment Requirements; FIO.

Detail drawings along with catalog cuts, templates, and erection and installation details, as appropriate, for the items listed. Submittals shall be complete in detail; shall indicate thickness, type, grade, class of

metal, and dimensions; and shall show construction details, reinforcement, anchorage, and installation with relation to the building construction.

1.4 EQUIPMENT REQUIREMENTS

1.4.1 Rigidly Mounted Equipment

Specific items of equipment to be furnished under this contract shall be constructed and assembled to withstand the seismic forces specified in TI 809-04, Chapter 10. For any rigid equipment which is rigidly attached on both sides of a building expansion joint, flexible joints for piping, electrical conduit, etc., that are capable of accommodating displacements equal to the full width of the joint in both orthogonal directions, shall be provided.

Transformers
Switch Boards
Free Standing Electric Motors
Communications Racks

1.4.2 Nonrigid or Flexibly-Mounted Equipment

Specific items of equipment to be furnished under this contract shall be constructed and assembled to resist a horizontal lateral force of 0.15 times the operating weight of the equipment at the vertical center of gravity of the equipment.

PART 2 PRODUCTS

2.1 LIGHTING FIXTURE SUPPORTS

Lighting fixtures and supports shall conform to UL 1570 or UL 1571 as applicable.

2.2 SWAY BRACING MATERIALS

Sway bracing materials (e.g. rods, plates, rope, angles, etc.) shall be as specified in Section 13080 SEISMIC PROTECTION FOR MISCELLANEOUS EQUIPMENT.

PART 3 EXECUTION

3.1 SWAY BRACES FOR CONDUIT

Conduit shall be braced as for an equivalent weight pipe in accordance with Section 15070 SEISMIC PROTECTION FOR MECHANICAL EQUIPMENT.

3.2 LIGHTING FIXTURES IN BUILDINGS

Lighting fixtures and supports shall conform to the following:

3.2.1 Pendant Fixtures

Pendant fixtures shall conform to the requirements of TI 809-04, Chapter 10.

3.2.2 Ceiling Attached Fixtures

3.2.2.1 Recessed Fluorescent Fixtures

Recessed fluorescent individual or continuous-row mounted fixtures shall be supported by a seismic-resistant suspended ceiling support system built in accordance with ASTM E 580. Seismic protection for the fixtures shall conform to the requirements of TI 809-04, Chapter 10. Recessed lighting fixtures not over 56 pounds in weight may be supported by and attached directly to the ceiling system runners using screws or bolts, number and size as required by the seismic design. Fixture accessories, including louvers, diffusers, and lenses shall have lock or screw attachments.

3.2.2.2 Surface-Mounted Fluorescent Fixtures

Surface-mounted fluorescent individual or continuous-row fixtures shall be attached to a seismic-resistant ceiling support system built in accordance with ASTM E 580. Seismic protection for the fixtures shall conform to the requirements of TI 809-04, Chapter 10.

3.2.3 Assembly Mounted on Outlet Box

A supporting assembly, that is intended to be mounted on an outlet box, shall be designed to accommodate mounting features on 4 inch boxes, plaster rings, and fixture studs.

3.2.4 Wall-Mounted Emergency Light Unit

Attachments for wall-mounted emergency light units shall be designed and secured for the worst expected seismic disturbance at the site.

3.2.5 Lateral Force

Structural requirements for light fixture bracing shall be in accordance with Section 13080 SEISMIC PROTECTION FOR MISCELLANIOUS EQUIPMENT.

END OF SECTION

SECTION 16375

ELECTRICAL DISTRIBUTION SYSTEM, UNDERGROUND

PART 1 GENERAL

1.1 REFERENCES

The publications listed below form a part of this specification to the extent referenced. The publications are referred to in the text by basic designation only.

AMERICAN NATIONAL STANDARDS INSTITUTE (ANSI)

ANSI C29.1	(1988; R 1996) Electrical Power Insulators - Test Methods
ANSI C37.46	(1981; R 1992) Power Fuses and Fuse Disconnecting Switches
ANSI C57.12.21	(1995) Requirements for Pad-Mounted, Compartmental-Type, Self-Cooled, Single-Phase Distribution Transformers with High-Voltage Bushings; (High-Voltage, 34 500 Grd Y/19 920 Volts and Below; Low-Voltage, 240/120; 167 kVA and Smaller)
ANSI C57.12.26	(1993) Pad-Mounted Compartmental-Type, Self-Cooled, Three-Phase Distribution Transformers for Use with Separable Insulated High-Voltage Connectors, High-Voltage, 34 500 Grd Y/19 920 Volts and Below; 2500 kVa and Smaller
ANSI C57.12.27	(1982) Conformance Requirements for Liquid-Filled Distribution Transformers Used in Pad-Mounted Installations, Including Unit Substations
ANSI C80.1	(1995) Rigid Steel Conduit - Zinc Coated
ANSI C119.1	(1986) Sealed Insulated Underground Connector Systems Rated 600 Volts

AMERICAN SOCIETY FOR TESTING AND MATERIALS (ASTM)

ASTM A 48	(1994a) Gray Iron Castings
ASTM A 123	(1989a) Zinc (Hot-Dip Galvanized) Coatings on Iron and Steel Products
ASTM A 153	(1996) Zinc Coating (Hot-Dip) on Iron and Steel Hardware

ASTM B 3	(1995) Soft or Annealed Copper Wire
ASTM B 8	(1993) Concentric-Lay-Stranded Copper Conductors, Hard, Medium-Hard, or Soft
ASTM B 117	(1997) Operating Salt Spray (FOG) Apparatus
ASTM B 496	(1992) Compact Round Concentric-Lay-Stranded Copper Conductors
ASTM C 478	(1996) Precast Reinforced Concrete Manhole Sections
ASTM C 478M	(1996) Precast Reinforced Concrete Mahhole Sections (Metric)
ASTM D 923	(1991) Sampling Electrical Insulating Liquids
ASTM D 1654	(1992) Evaluation of Painted or Coated Specimens Subjected to Corrosive Environments
ASTM D 2239	(1989) Polyethylene (PE) Plastic Pipe (SIDR-PR) Based on Controlled Inside Diameter
ASTM D 4059	(1996) Analysis of Polychlorinated Biphenyls in Insulating Liquids by Gas Chromatography
ASTM F 883	(1990) Padlocks

ASSOCIATION OF EDISON ILLUMINATING COMPANIES (AEIC)

AEIC CS6	(1996) Ethylene Propylene Rubber Insulated Shielded Power Cables Rated 5 Through 69 kV

FACTORY MUTUAL ENGINEERING AND RESEARCH (FM)

FM P7825a	(1998) Approval Guide Electrical Equipment

INSTITUTE OF ELECTRICAL AND ELECTRONICS ENGINEERS (IEEE)

IEEE C2	(1997) National Electrical Safety Code
IEEE ANSI/IEEE C37.20.3	(1987; R 1992) Metal-Enclosed Interrupter Switchgear
IEEE ANSI/IEEE C57.12.00	(1993) IEEE Standard General Requirements for Liquid-Immersed Distribution, Power, and Regulating Transformers

IEEE C62.1	(1989; R 1994) Surge Arresters for ac Power Circuits
IEEE C62.2	(1987; R 1994) Guide for the Application of Gapped Silicon-Carbide Surge Arresters for Alternating Current Systems
IEEE C62.11	(1993) IEEE Standard Metal-Oxide Surge Arresters for AC Power Circuits
IEEE Std 48	(1996) Standard Test Procedures and Requirements for Alternating-Current Cable Terminations 2.5 kV through 765 kV
IEEE Std 81	(1983) Guide for Measuring Earth Resistivity, Ground Impedance, and Earth Surface Potentials of a Ground System (Part 1)
IEEE Std 100	(1996) IEEE Standard Dictionary of Electrical and Electronics Terms
IEEE Std 386	(1995) Separable Insulated Connector Systems for Power Distribution Systems Above 600V
IEEE Std 404	(1993) Cable Joints for Use with Extruded Dielectric Cable Rated 5000 V through 138 000 V and Cable Joints for Use with Laminated Dielectric Cable Rated 2500 V Through 500 000 V
IEEE Std 592	(1990; R 1996) Exposed Semiconducting Shields on Premolded High Voltage Cable Joints and Separable Insulated Connectors

NATIONAL ELECTRICAL MANUFACTURERS ASSOCIATION (NEMA)

NEMA FB 1	(1993) Fittings, Cast Metal Boxes and Conduit Bodies for Conduit and Cable Assemblies
NEMA LA 1	(1992) Surge Arresters
NEMA TC 6	(1990) PVC and ABS Plastic Utilities Duct for Underground Installation
NEMA WC 8	(1991; Rev 1; Rev 2) Ethylene-Propylene-Rubber-Insulated Wire and Cable for the Transmission and Distribution of Electrical Energy

NATIONAL FIRE PROTECTION ASSOCIATION (NFPA)

NFPA 70	(1999) National Electrical Code

UNDERWRITERS LABORATORIES (UL)

UL 6	(1997) Rigid Metal Conduit
UL 467	(1993; Rev thru Aug 1996) Grounding and Bonding Equipment
UL 486A	(1997) Wire Connectors and Soldering Lugs for Use with Copper Conductors
UL 486B	(1997; Rev Jun 1997) Wire Connectors for Use with Aluminum Conductors
UL 510	(1994; Rev thru Nov 1997) Polyvinyl Chloride, Polyethylene and Rubber Insulating Tape
UL 514A	(1996) Metallic Outlet Boxes
UL 651	(1995; Rev thru Apr 1997) Schedule 40 and 80 Rigid PVC Conduit
UL 1072	(1995; Rev Mar 1998) Medium-Voltage Power Cable
UL 1242	(1996; Rev Apr 1997) Intermediate Metal Conduit

1.2 GENERAL REQUIREMENTS

1.2.1 Terminology

Terminology used in this specification is as defined in IEEE Std 100.

1.2.2 Service Conditions

Items provided under this section shall be specifically suitable for the following service conditions:

Seismic Zone 3

1.3 SUBMITTALS

Governmental approval is required for submittals with a "GA" designation; submittals having an "FIO" designation are for information only. The following shall be submitted in accordance with Section 01330 SUBMITTAL PROCEDURES:

SD-01 Data

Manufacturer's Catalog Data; FIO.

Catalog cuts, brochures, circulars, specifications, product data, and printed information in sufficient detail and scope to verify compliance with the requirements of the contract documents.

Material, Equipment, and Fixture Lists; FIO.

A complete itemized listing of equipment and materials proposed for incorporation into the work. Each entry shall include an item number, the quantity of items proposed, and the name of the manufacturer of each such item.

Installation Procedures; FIO.

As a minimum, installation procedures for transformers, substations, switchgear, medium-voltage cable terminations and splices.

Procedures shall include cable pulling plans, diagrams, instructions, and precautions required to install, adjust, calibrate, and test the devices and equipment.

SD-04 Drawings

Electrical Distribution System; GA.

Detail drawings consisting of equipment drawings, illustrations, schedules, instructions, diagrams manufacturers standard installation drawings and other information necessary to define the installation and enable the Government to check conformity with the requirements of the contract drawings.

If departures from the contract drawings are deemed necessary by the Contractor, complete details of such departures shall be included with the detail drawings. Approved departures shall be made at no additional cost to the Government.

Detail drawings shall show how components are assembled, function together and how they will be installed on the project. Data and drawings for component parts of an item or system shall be coordinated and submitted as a unit. Data and drawings shall be coordinated and included in a single submission. Multiple submissions for the same equipment or system are not acceptable except where prior approval has been obtained from the Contracting Officer. In such cases, a list of data to be submitted later shall be included with the first submission. Detail drawings shall consist of the following:

a. Detail drawings showing physical arrangement, construction details, connections, finishes, materials used in fabrication, provisions for conduit or busway entrance, access requirements for installation and maintenance, physical size, electrical characteristics, foundation and support details, and equipment weight. Drawings shall be drawn to scale and/or dimensioned. All optional items shall be clearly identified as included or excluded.

b. Internal wiring diagrams of equipment showing wiring as actually provided for this project. External wiring connections shall be clearly identified.

Detail drawings shall as a minimum depict the installation of the following items:

a. Medium-voltage cables and accessories including cable installation plan

b. Transformers.

c. Junction Pedestal/Sectionalizing Terminal

d. Surge Arrester

e. Vaults and Manholes

Profile Drawings; GA

The Contractor shall submit for review and approval, profile drawings of the power and signal, duct and vault system shown on plans. The drawings shall show locations and elevations of structures, relative to finished grade; provide for duct slope as specified in paragraph: Duct Lines; and provide for minimum and maximum burial depth of vaults as indicated. The drawings shall be coordinated with other disciplines, and shall eliminate interferences with "existing" or "this contract" utilities. Drawings shall be full size, complete with title blocks and other descriptive data, and numbered sequentially for insertion into the plan set. Drawings shall be prepared on CADD and shall include an electronic DXF file. Drawings shall be stamped by a registered professional engineer.

As-Built Drawings; GA.

The as-built drawings shall be a record of the construction as installed. The drawings shall include the information shown on the contract drawings as well as deviations, modifications, and changes from the contract drawings, however minor. The as-built drawings shall be a full sized set of prints marked to reflect deviations, modifications, and changes. The as-built drawings shall be complete and show the location, size, dimensions, part identification, and other information. Additional sheets may be added. The as-built drawings shall be jointly inspected for accuracy and completeness by the Contractor's quality control representative and by the Contracting Officer prior to the submission of each monthly pay estimate. Upon completion of the work, the Contractor shall provide three full sized sets of the marked prints to the Contracting Officer for approval. If upon review, the as-built drawings are found to contain errors and/or omissions, they will be returned to the Contractor for correction. The Contractor shall correct and return the as-built drawings to the Contracting Officer for approval within 10 calendar days from the time the drawings are returned to the Contractor.

SD-09 Reports

Factory Test; FIO.

Certified factory test reports shall be submitted when the manufacturer performs routine factory tests, including tests required by standards listed in paragraph REFERENCES. Results of factory tests performed shall be certified by the manufacturer, or an approved testing laboratory, and submitted within 7 days following successful completion of the tests. The manufacturer's pass-fail criteria for tests specified in paragraph FIELD TESTING shall be included.

Field Testing; FIO.

A proposed field test plan, 30 days prior to testing the installed system. No field test shall be performed until the test plan is approved. The test plan shall consist of complete field test procedures including tests to be performed, test equipment required, and tolerance limits.

Test Reports; GA.

Six copies of the information described below in 215.9 by 279.4 mm (8-1/2 by 11 inch) binders having a minimum of three rings, including a separate section for each test. Sections shall be separated by heavy plastic dividers with tabs.

a. A list of equipment used, with calibration certifications.

b. A copy of measurements taken.

c. The dates of testing.

d. The equipment and values to be verified.

e. The condition specified for the test.

f. The test results, signed and dated.

g. A description of adjustments made.

Cable Installation Reports; GA.

Six copies of the information described below in 215.9 by 279.4 mm (8-1/2 by 11 inch) binders having a minimum of three rings from which material may readily be removed and replaced, including a separate section for each cable pull. Sections shall be separated by heavy plastic dividers with tabs, with all data sheets signed and dated by the person supervising the pull.

a. Site layout drawing with cable pulls numerically identified.

b. A list of equipment used, with calibration certifications. The manufacturer and quantity of lubricant used on pull.

c. The cable manufacturer and type of cable.

d. The dates of cable pulls, time of day, and ambient temperature.

e. The length of cable pull and calculated cable pulling tensions.

f. The actual cable pulling tensions encountered during pull.

SD-13 Certificates

Materials and Equipment; FIO.

Where materials or equipment are specified to conform to the standards of the Underwriters Laboratories (UL) or to be constructed or tested, or both, in accordance with the standards of the American National Standards Institute (ANSI), the Institute of Electrical and Electronics Engineers (IEEE), or the National Electrical Manufacturers Association (NEMA), the Contractor shall submit proof that the items provided conform to such requirements. The label of, or listing by, UL will be acceptable as evidence that the items conform. Either a certification or a published catalog specification data statement, to the effect that the item is in accordance with the referenced ANSI or IEEE standard, will be acceptable as evidence that the item conforms. A similar certification or published catalog specification data statement to the effect that the item is in accordance with the referenced NEMA standard, by a company listed as a member company of NEMA, will be acceptable as evidence that the item conforms. In lieu of such certification or published data, the Contractor may submit a certificate from a recognized testing agency equipped and competent to perform such services, stating that the items have been tested and that they conform to the requirements listed, including methods of testing of the specified agencies. Compliance with above-named requirements does not relieve the Contractor from compliance with any other requirements of the specifications.

Cable Splicer Qualification; GA.

A certification that contains the names and the qualifications of people recommended to perform the splicing and termination of medium-voltage cables approved for installation under this contract. The certification shall indicate that any person recommended to perform actual splicing and terminations has been adequately trained in the proper techniques and have had at least three recent years of experience in splicing and terminating the same or similar types of cables approved for installation. In addition, any person recommended by the Contractor may be required to perform a practice splice and termination, in the presence of the Contracting Officer, before being approved as a qualified installer of medium-voltage cables. If that additional requirement is imposed, the Contractor shall provide short sections of the approved types of cables along with the approved type of splice and termination kits, and detailed manufacturer's instruction for the proper splicing and termination of the approved cable types.

Cable Installer Qualifications; FIO.

The Contractor shall provide at least one onsite person in a supervisory position with a documentable level of competency and experience to supervise all cable pulling operations. A resume shall be provided showing the cable installers' experience in the last three years, including a list of references complete with points of contact, addresses and telephone numbers.

SD-19 OPERATION AND MAINTENANCE MANUALS

Electrical Distribution System; GA.

Six copies of operation and maintenance manuals, within 15 calendar days following the completion of tests and including assembly, installation, operation and maintenance instructions, spare parts data which provides supplier name, current cost, catalog order number, and a recommended list of spare parts to be stocked. Manuals shall also include data outlining detailed procedures for system startup and operation, and a troubleshooting guide which lists possible operational problems and corrective action to

be taken. A brief description of all equipment, basic operating features, and routine maintenance requirements shall also be included. Documents shall be bound in a binder marked or identified on the spine and front cover. A table of contents page shall be included and marked with pertinent contract information and contents of the manual. Tabs shall be provided to separate different types of documents, such as catalog ordering information, drawings, instructions, and spare parts data. Index sheets shall be provided for each section of the manual when warranted by the quantity of documents included under separate tabs or dividers.

Three additional copies of the instructions manual shall be provided within 30 calendar days following the manuals.

1.4 DELIVERY, STORAGE, AND HANDLING

Devices and equipment shall be visually inspected by the Contractor when received and prior to acceptance from conveyance. Stored items shall be protected from the environment in accordance with the manufacturer's published instructions. Damaged items shall be replaced. Oil filled transformers and switches shall be stored in accordance with the manufacturer's requirements. Metal poles shall be handled and stored in accordance with the manufacturer's instructions.

1.5 EXTRA MATERIALS

One additional spare fuse or fuse element for each furnished fuse or fuse element shall be delivered to the contracting officer when the electrical system is accepted. Two complete sets of all special tools required for maintenance shall be provided, complete with a suitable tool box. Special tools are those that only the manufacturer provides, for special purposes (to access compartments, or operate, adjust, or maintain special parts).

1.6 OUTSIDE PLANT TELEPHONE

Outside Plant Telephone materials, equipment and installation shall conform to the requirements of Section 16711 TELEPHONE SYSTEM, OUTSIDE PLANT

1.7 FIBER OPTIC CABLE SYSTEM

Fiber Optic Cable System materials, equipment and installation shall conform to the requirements of Section 16711, TELEPHONE SYSTEM, OUTSIDE PLANT, except that conduit and innerduct used for underground installation shall be as specified herein.

1.8 CABLE TV

The Contractor shall coordinate with the local provider through the Contracting Officer one of the innerducts installed as part of the underground ductbank shall be designed for Cable TV. Cable and all connections will be done by others.

PART 2 PRODUCTS

2.1 STANDARD PRODUCT

Material and equipment shall be the standard product of a manufacturer regularly engaged in the manufacture of the product and shall essentially duplicate items that have been in satisfactory use for at least 2 years prior to bid opening. Items of the same classification shall be identical including equipment, assemblies, parts, and components.

2.2 NAMEPLATES

2.2.1 General

Each major component of this specification shall have the manufacturer's name, address, type or style, model or serial number, and catalog number on a nameplate securely attached to the equipment. Nameplates shall be made of noncorrosive metal. Equipment containing liquid dielectrics shall have the type of dielectric on the nameplate. Sectionalizer switch nameplates shall have a schematic with all switch positions shown and labeled. As a minimum, nameplates shall be provided for transformers, circuit breakers, meters, switches, and switchgear.

2.2.2 Liquid-Filled Transformer Nameplates

Power transformers shall be provided with nameplate information in accordance with IEEE ANSI/IEEE C57.12.00. Nameplates shall indicate the number of liters and composition of liquid-dielectric, and shall be permanently marked with a statement that the transformer dielectric to be supplied is non-polychlorinated biphenyl. If transformer nameplate is not so marked, the Contractor shall furnish manufacturer's certification for each transformer that the dielectric is non-PCB classified, with less than 1 ppm PCB content in accordance with paragraph LIQUID DIELECTRICS. Certifications shall be related to serial numbers on transformer nameplates. Transformer dielectric exceeding the 1 ppm PCB content or transformers without certification will be considered as PCB insulated and will not be accepted.

2.3 CORROSION PROTECTION

2.3.1 Aluminum Materials

Aluminum shall not be used.

2.3.2 Ferrous Metal Materials

2.3.2.1 Hardware

Ferrous metal hardware shall be hot-dip galvanized in accordance with ASTM A 153 and ASTM A 123.

2.3.2.2 Equipment

Equipment and component items, including but not limited to transformer stations and ferrous metal luminaries not hot-dip galvanized or porcelain enamel finished, shall be provided with corrosion-resistant finishes which shall withstand 200 hours of exposure to the salt spray test specified in ASTM B 117

without loss of paint or release of adhesion of the paint primer coat to the metal surface in excess of 1.6 mm (1/16 inch) from the test mark. The scribed test mark and test evaluation shall be in accordance with ASTM D 1654 with a rating of not less than 7 in accordance with TABLE 1, (procedure A). Cut edges or otherwise damaged surfaces of hot-dip galvanized sheet steel or mill galvanized sheet steel shall be coated with a zinc rich paint conforming to the manufacturer's standard.

2.3.3 Finishing

Painting required for surfaces not otherwise specified and finish painting of items only primed at the factory shall be as specified in Section 09900 PAINTING, GENERAL.

2.4 CABLES

2.4.1 Medium-Voltage Cables

2.4.1.1 General

Cable construction shall be Type MV, conforming to NFPA 70 and UL 1072. Cables shall be manufactured for use in duct applications. Cables shall be single conductor type unless otherwise indicated.

2.4.1.2 Ratings

Cables shall be rated for a circuit voltage of 15 kV.

2.4.1.3 Conductor Material

Underground cables shall be soft drawn copper complying with ASTM B 3 and ASTM B 8 for regular concentric and compressed stranding or ASTM B 496 for compact stranding.

2.4.1.4 Insulation

Cable insulation shall be ethylene-propylene-rubber (EPR) insulation conforming to the requirements of NEMA WC 8 and AEIC CS6. A 133 percent insulation level shall be used on 5 kV, 15 kV and 25 kV rated cables.

2.4.1.5 Shielding

Cables rated for 2 kV and above shall have a semiconducting conductor shield, a semiconducting insulation shield, and an overall copper wire shield for each phase. The shield wire shall be sized to meet IEEE C2 requirements for a ground fault availability of 1335 amperes.

2.4.1.6 Neutrals

Neutral conductors shall be copper employing the same insulation and jacket materials as phase conductors, except that a 600-volt insulation rating is acceptable.

2.4.1.7 Jackets

Cables shall be provided with a PVC or chlorinated polyethylene jacket.

2.4.2 Low-Voltage Cables

Cables shall be rated 600 volts and shall conform to the requirements of NFPA 70, and must be UL listed for the application or meet the applicable section of either ICEA or NEMA standards.

2.4.2.1 Conductor Material

Underground cables shall be annealed copper complying with ASTM B 3 and ASTM B 8. Intermixing of copper and aluminum conductors is not permitted.

2.4.2.2 Insulation

Insulation shall be ethylene-propylene-rubber (EPR) and shall conform to the requirements of NEMA WC 8 and NFPA 70.

2.4.2.3 Jackets

Cables shall have on overall PVC outer jacket.

2.4.2.4 In Ducts and Risers

Cables shall be single-conductor cable, Type USE, in accordance with NFPA 70.

2.5 CABLE JOINTS, TERMINATIONS, AND CONNECTORS

2.5.1 Medium-Voltage Cable Joints

Medium-voltage cable joints shall comply with IEEE Std 404 and IEEE Std 592. Medium-voltage cable terminations shall comply with IEEE Std 48. Joints shall be the standard products of a manufacturer and shall be either of the factory preformed type or of the kit type containing tapes and other required parts. Joints shall have ratings not less than the ratings of the cables on which they are installed. Splice kits may be of the heat-shrinkable type for voltages up to 15 kV, of the premolded splice and connector type, the conventional taped type, or the resin pressure-filled overcast taped type for voltages up to 35 kV; except that for voltages of 7.5 kV or less a resin pressure-filled type utilizing a plastic-tape mold is acceptable. Joints used in manholes, handholes, vaults and pull boxes shall be certified by the manufacturer for waterproof, submersible applications.

2.5.2 Medium-Voltage Separable Insulated Connectors

Separable insulated connectors shall comply with IEEE Std 386 and IEEE Std 592 and shall be of suitable construction or standard splice kits shall be used. Separable insulated connectors are acceptable for voltages up to 35 kV. Connectors shall be of the loadbreak type as indicated, of suitable construction for the application and the type of cable connected, and shall include cable shield adaptors. Separable insulated connectors shall not be used as substitutes for conventional permanent splices. External clamping points and test points shall be provided.

2.5.3 Low-Voltage Cable Splices

Low-voltage cable splices and terminations shall be rated at not less than 600 Volts. Splices in conductors No. 10 AWG and smaller shall be made with an insulated, solderless, pressure type connector, conforming to the applicable requirements of UL 486A. Splices in conductors No. 8 AWG and larger shall be made with noninsulated, solderless, pressure type connector, conforming to the applicable requirements of UL 486A and UL 486B. Splices shall then be covered with an insulation and jacket material equivalent to the conductor insulation and jacket. Splices below grade or in wet locations shall be sealed type conforming to ANSI C119.1 or shall be waterproofed by a sealant-filled, thick wall, heat shrinkable, thermosetting tubing or by pouring a thermosetting resin into a mold that surrounds the joined conductors.

2.5.4 Terminations

Terminations shall be in accordance with IEEE Std 48, Class 1 or Class 2; of the molded elastomer, wet-process porcelain, prestretched elastomer, heat-shrinkable elastomer, or taped type. Acceptable elastomers are track-resistant silicone rubber or track-resistant ethylene propylene compounds, such as ethylene propylene rubber or ethylene propylene diene monomer. Separable insulated connectors may be used for apparatus terminations, when such apparatus is provided with suitable bushings. Terminations shall be of the outdoor type, except that where installed inside outdoor equipment housings which are sealed against normal infiltration of moisture and outside air, indoor, Class 2 terminations are acceptable. Class 3 terminations are not acceptable. Terminations, where required, shall be provided with mounting brackets suitable for the intended installation and with grounding provisions for the cable shielding, metallic sheath, and armor.

2.5.4.1 Factory Preformed Type

Molded elastomer, wet-process porcelain, prestretched, and heat-shrinkable terminations shall utilize factory preformed components to the maximum extent practicable rather than tape build-up. Terminations shall have basic impulse levels as required for the system voltage level. Anti-tracking tape shall be applied over exposed insulation of preformed molded elastomer terminations.

2.5.4.2 Taped Terminations

Taped terminations shall use standard termination kits providing terminal connectors, field-fabricated stress cones, and rain hoods. Terminations shall be at least 510 mm long from the end of the tapered cable jacket to the start of the terminal connector, or not less than the kit manufacturer's recommendations, whichever is greater.

2.6 CONDUIT AND DUCTS

Duct lines shall be concrete-encased, thin-wall type.

2.6.1 Metallic Conduit

Intermediate metal conduit shall comply with UL 1242. Rigid galvanized steel conduit shall comply with UL 6 and ANSI C80.1. Metallic conduit fittings and outlets shall comply with UL 514A and NEMA FB 1.

2.6.2 Nonmetallic Ducts

2.6.2.1 Concrete Encased Ducts

UL 651 Schedule 40 or NEMA TC 6 Type EB.

2.6.2.2 Innerducts, Coilable Tube

SIDR 11.5 Polyethylene plastic pipe conforming to ASTM D 2239.

2.6.3 Conduit Sealing Compound

Compounds for sealing ducts and conduit shall have a putty-like consistency workable with the hands at temperatures as low as 2 degrees C (35 degrees F), shall neither slump at a temperature of 150 degrees C (300 degrees F), nor harden materially when exposed to the air. Compounds shall adhere to clean surfaces of fiber or plastic ducts; metallic conduits or conduit coatings; concrete, masonry, or lead; any cable sheaths, jackets, covers, or insulation materials; and the common metals. Compounds shall form a seal without dissolving, noticeably changing characteristics, or removing any of the ingredients. Compounds shall have no injurious effect upon the hands of workmen or upon materials.

2.7 MANHOLES, HANDHOLES, AND PULLBOXES

Manholes, handholes, and pullboxes shall be as indicated. Strength of manholes, handholes, and pullboxes and their frames and covers shall conform to the requirements of IEEE C2. Precast-concrete manholes shall have the required strength established by ASTM C 478, ASTM C 478M. Frames and covers shall be made of gray cast iron and a machine-finished seat shall be provided to ensure a matching joint between frame and cover. Cast iron shall comply with ASTM A 48, Class 30B, minimum. Handholes for low voltage cables installed in parking lots, sidewalks, and turfed areas shall be fabricated from an aggregate consisting of sand and with continuous woven glass strands having an overall compressive strength of at least 69 MPa (10,000 psi) and a flexural strength of at least 34.5 MPa (5000 psi). Pullbox and handhole covers in sidewalks, and turfed areas shall be of the same material as the box. Concrete pullboxes shall consist of precast reinforced concrete boxes, extensions, bases, and covers.

2.7.1 Engraved Covers

Engraved covers shall be provided where indicated. Covers shall bear the insignia “POWER” or “SIGNAL” as applicable and the words “FORT LEWIS” in addition to the rendering. Covers shall be of the indicated size and shall be rated for vehicular loads in accordance with FS RR-F-621. Covers shall be cast iron complying with ASTM A48, Class 30B; hardness 170-223 brinnell. Casting for covers shall be cope and drag system with the face of the casting being in the drag portion of the mold (poured face side down). Cope and drag shall align precisely to avoid excessive fining and misalignment. Castings shall be free of burrs, slag, air pockets, blow holes and flashing. Castings shall be squared and flat; excessive warpage or shrinkage shall not be acceptable. Casting sections shall align evenly with gap being no greater than 3 mm. Alignment of design should be continuous where applicable. Welding or grinding on exposed surfaces of the castings shall not be acceptable. Mold for the covers shall be provided by the Contracting Officer.

2.8 TRANSFORMERS AND SWITCHGEAR

Transformers and switchgear shall be of the outdoor type having the ratings and arrangements indicated. Medium-voltage ratings of cable terminations shall be 15kV between phases for 133 percent insulation level.

2.8.1 Pad-Mounted Transformers

Pad-mounted transformers shall comply with ANSI C57.12.26 and shall be of the loop feed type. Pad-mounted transformer stations shall be assembled and coordinated by one manufacturer and each transformer station shall be shipped as a complete unit so that field installation requirements are limited to mounting each unit on a concrete pad and connecting it to primary and secondary lines. Stainless steel pins and hinges shall be provided. Barriers shall be provided between high- and low-voltage compartments. High-voltage compartment doors shall be interlocked with low-voltage compartment doors to prevent access to any high-voltage section unless its associated low-voltage section door has first been opened. Compartments shall be sized to meet the specific dimensional requirements of ANSI C57.12.26. Pentahead locking bolts shall be provided with provisions for a padlock.

2.8.1.1 High-Voltage Compartments

The high-voltage compartment shall be dead-front construction. Primary switching and protective devices shall include loadbreak switching, drawout, dry-well-mounted, current-limiting fuses, medium-voltage separable loadbreak connectors, universal bushing wells and inserts or integral one piece bushings and surge arresters. Fuses shall comply with the requirements of paragraph METERING AND PROTECTIVE DEVICES. The switch shall be mounted inside transformer tank with switch operating handle located in high-voltage compartment and equipped with metal loop for hook stick operation. Fuses shall be interlocked with switches so that fuses can be removed only when the associated switch is in the "OPEN" position. Adjacent to medium-voltage cable connections, a nameplate or equivalent stenciled inscription shall be provided inscribed "DO NOT OPEN CABLE CONNECTORS UNLESS SWITCH IS OPEN." Surge arresters shall be fully insulated and configured to terminate on the same bushing as the primary cable by means of a loadbreak, feed-through bushing insert.

2.8.1.2 Load-Break Switch

Loop feed sectionalizer switches: Provide three, two-position, oil-immersed type switches to permit closed transition loop feed and sectionalizing. Each switch shall be rated at 15kV, 95kV BIL, with a continuous current rating and load-break rating of 200 amperes, and a make-and-latch rating of 10,000 rms amperes symmetrical. Locate the switch handle in the high-voltage compartment. Switch positions shall be per Fort Lewis requirements coordinated by Contracting Officer.

2.8.1.3 Transformer Tank Sections

Transformers shall comply with IEEE ANSI/IEEE C57.12.00, ANSI C57.12.21, and ANSI C57.12.26 and shall be of the mineral oil-insulated type. Transformers shall be suitable for outdoor use and shall have 2 separate windings per phase. Standard NEMA primary taps shall be provided. Where primary taps are not specified, 4, 2-1/2 percent rated kVA high-voltage taps shall be provided 2 above and 2 below rated, primary voltage. Operating handles for primary tap changers for de-energized operation shall be located within high-voltage compartments, externally to transformer tanks. Adjacent to the tap

changer operating handle, a nameplate or equivalent stenciled inscription shall be provided and inscribed "DO NOT OPERATE UNDER LOAD." Transformer ratings at 60 Hz shall be as follows:

Three-phase capacity	500 kVA
Impedance	Manufacturer's Standard
Temperature Rise	65 degrees C
High-voltage winding	13,800 volts
High-voltage winding connections	Delta
Low-voltage winding	208/120 volts
Low-voltage winding connections	Wye

2.8.1.4 Low-Voltage Cable Compartments

Neutrals shall be provided with fully-insulated bushings. Clamp type cable terminations, suitable for copper conductors entering from below, shall be provided as necessary.

2.8.1.5 Accessories

High-voltage warning signs shall be permanently attached to each side of transformer stations. Voltage warning signs shall comply with IEEE C2. Copper-faced steel or stainless steel ground connection pads shall be provided in both the high- and low-voltage compartments. Dial-type thermometer, liquid-level gauge, and drain valve with built-in sampling device shall be provided for each transformer station. Insulated-bushing-type parking stands shall be provided adjacent to each separable load-break elbow to provide for cable isolation during sectionalizing operations.

2.8.1.6 Efficiency

Transformers shall be of an energy efficient design with maximum losses and impedance, and minimum regulation, in accordance with Table I. No load losses shall be at 100 percent rated voltage and frequency. Load losses and impedance shall be at 100 percent rated capacity. Contractor shall submit purchase cost and manufacturers calculations verifying Table I efficiencies before ordering transformers. Losses shall be guaranteed.

TABLE I - TRANSFORMER EFFICIENCY

KVA	Phase	No Load Losses (Watts)	Load Losses (Watts)	Percent Impedance	Percent Regulation 100% PF	80% PF
112.5	3	85	1,180			
150	3	110	1,410			
225	3	150	1,700			
300	3	190	2,100			

500	3	260	2,900
750	3	330	4,800

2.8.1.6.1 Exceeding Guaranteed Losses

In the event that transformer test results indicate failure to meet Table I efficiencies, the Government reserves the right to reject the transformers; or, to deduct from the contract amount the excess amount of the total owning cost. The total owning cost shall be defined as the total cost of losses plus purchase cost. No load losses shall be calculated at $4700 per kW and load losses at $1900 per kW. The excess amount of the total owning cost shall be the difference between guaranteed and test results. No adjustment to the contract price will be made if test results are less than guaranteed losses.

2.8.2 Cable Terminating Cabinets

Cable terminating cabinets shall be hook-stick operable, deadfront construction conforming to the requirements of IEEE ANSI/IEEE C37.20.3, Category A. Cabinets shall be provided with 200 A. loadbreak junctions and elbow-type separable loadbreak connectors, cable parking stands, and growing lugs. The cable terminating equipment shall conform to IEEE Std 386.

Ratings at 60 Hz shall be:

Nominal voltage (kV)	15.
Rated maximum voltage (kV)	Per Standards.
Rated continuous current (A)	200.
Three-second short-time current-carrying capacity (kA)	Per Standards.
BIL (kV)	95.

2.9 PROTECTIVE DEVICES

2.9.1 Fuses, Medium-Voltage, Including Current-Limiting

2.9.1.1 Construction

Units shall be suitable for outdoor use. Fuses shall have integral blown-fuse indicators. All ratings shall be clearly visible.

2.9.1.2 Ratings

Current-limiting power fuses shall have ratings in accordance with ANSI C37.46.

2.9.2.3 E-Rated, Current-Limiting Power Fuses

E-rated, current-limiting, power fuses shall conform to ANSI C37.46.

2.9.2.4 C-Rated, Current-Limiting Power Fuses

C-rated, current-limiting power fuses shall open in 1000 seconds at currents between 170 and 240 percent of the C rating.

2.10 SURGE ARRESTERS

Surge arresters shall comply with NEMA LA 1, IEEE C62.1, IEEE C62.2, and IEEE C62.11 and shall be provided where indicated. Arresters shall be distribution class, rated as shown. Arresters for use at elevations in excess of 1.8 km (6000 feet) above mean sea level shall be specifically rated for that purpose. Arresters shall be equipped with mounting brackets suitable for the indicated installations. Arresters shall be of the metal-oxide varistor or combination valve-metal-oxide varistor type.

2.11 GROUNDING AND BONDING

2.11.1 Driven Ground Rods

Ground rods shall be copper-clad steel conforming to UL 467 not less than 19 mm (3/4 inch) in diameter by 3.1 m (10 feet) in length. Sectional type rods may be used.

2.11.2 Grounding Conductors

Grounding conductors shall be bare, except where installed in conduit with associated phase conductors. Insulated conductors shall be of the same material as phase conductors and green color-coded, except that conductors shall be rated no more than 600 volts. Bare conductors shall be ASTM B 8 soft-drawn unless otherwise indicated. Aluminum is not acceptable.

2.12 CONCRETE AND REINFORCEMENT

Concrete work shall have minimum 20 MPa compressive strength and conform to the requirements of Section 03300 CAST-IN-PLACE STRUCTURAL CONCRETE. Concrete reinforcing shall be as specified in Section 03200 CONCRETE REINFORCEMENT.

2.13 PADLOCKS

Padlocks shall conform to ASTM F 883, Type EPC , size 2

2.14 CABLE FIREPROOFING SYSTEMS

Cable fireproofing systems shall be listed in FM P7825a as a fire-protective coating or tape approved for grouped electrical conductors and shall be suitable for application on the type of medium-voltage cables provided. After being fully cured, materials shall be suitable for use where exposed to oil, water, gases, salt water, sewage, and fungus and shall not damage cable jackets or insulation. Asbestos materials are not acceptable.

2.14.1 Fireproof Coating

Cable fireproofing coatings shall be compounded of water-based thermoplastic resins, flame-retardant chemicals, and inorganic noncombustible fibers and shall be suitable for the application methods used.

Coatings applied on bundled cables shall have a derating factor of less than 5 percent, and a dielectric strength of 95 volts per mil minimum after curing.

2.14.2 Fireproofing Tape

Fireproofing tape shall be at least 50 mm (2 inches) wide and shall be a flexible, conformable, polymeric, elastomer tape designed specifically for fireproofing cables.

2.14.3 Plastic Tape

Preapplication plastic tape shall be pressure sensitive, 0.254 mm (10 mil) thick, conforming to UL 510.

2.15 LIQUID DIELECTRICS

Liquid dielectrics for transformers, capacitors, reclosers, and other liquid-filled electrical equipment shall be non-polychlorinated biphenyl (PCB) mineral-oil or less-flammable liquid as specified. Nonflammable fluids shall not be used. Tetrachloroethylene (perchloroethylene) and 1, 2, 4 trichlorobenzene fluids shall not be used. Liquid dielectrics in retrofitted equipment shall be certified by the manufacturer as having less than 1 parts per million (ppm) PCB content. In lieu of the manufacturer's certification, the Contractor may submit a test sample of the dielectric in accordance with ASTM D 923 and have tests performed per ASTM D 4059 at a testing facility approved by the Contracting Officer. Equipment with test results indicating PCB level exceeding 1 ppm shall be replaced.

2.16 FACTORY TESTS

Factory tests shall be performed, as follows, in accordance with the applicable publications and with other requirements of these specifications. The Contracting Officer shall be notified at least 10days before the equipment is ready for testing. The Contracting Officer reserves the right to witness the tests.

a. Transformers: Manufacturer's standard routine tests in accordance with IEEE ANSI/IEEE C57.12.00.

b. Factory Preformed Terminations: Wet withstand voltage tests in accordance with IEEE Std 48 for the next higher BIL level.

c. Electrical Power Insulators: Manufacturer's standard tests in accordance with ANSI C29.1.

PART 3 EXECUTION

3.1 GENERAL INSTALLATION REQUIREMENTS

Equipment and devices shall be installed and energized in accordance with the manufacturer's published instructions. Steel conduits installed underground shall be installed and protected from corrosion in conformance with the requirements of Section 16415 ELECTRICAL WORK, INTERIOR. Except as covered herein, excavation, trenching, and backfilling shall conform to the requirements of Section 02316 EXCAVATION, TRENCHING, AND BACKFILLING FOR UTILITIES SYSTEMS. Concrete work shall have minimum 20 MPa compressive strength and conform to the requirements of Section 03300 CAST-IN-PLACE STRUCTURAL CONCRETE. All necessary interconnections, services, and

adjustments required for the telephone system as indicated shall be provided. All copper and fiber cable shall be terminated and tested.

3.1.1 Conformance to Codes

All installation work shall comply with the requirements and recommendations of NFPA 70 and IEEE C2 as applicable. In addition, all telephone work shall be done in accordance with FM 11-486-5 and REA TE&CM 644.

3.1.2 Verification of Dimensions

The Contractor shall become familiar with details of the work, shall verify dimensions in the field, and shall advise the Contracting Officer of any discrepancy before performing any work.

3.1.3 Disposal of Liquid Dielectrics

PCB-contaminated dielectrics must be marked as PCB and transported to and incinerated by an approved EPA waste disposal facility. The Contractor shall furnish certification of proper disposal. Contaminated dielectrics shall not be diluted to lower the contamination level.

3.2 CABLE INSTALLATION

The Contractor shall obtain from the manufacturer an installation manual or set of instructions which addresses such aspects as cable construction, insulation type, cable diameter, bending radius, cable temperature, lubricants, coefficient of friction, conduit cleaning, storage procedures, moisture seals, testing for and purging moisture, etc. The Contractor shall then perform pulling calculations and prepare a pulling plan which shall be submitted along with the manufacturers instructions in accordance with SUBMITTALS.

3.2.1 Cable Installation Plan and Procedure

Cable shall be installed strictly in accordance with the cable manufacturer's recommendations. Each electrical circuit shall be identified by means of a fiber, laminated plastic, or non-ferrous metal tags, or approved equal, in each manhole, handhole, junction box, and each terminal. Each tag shall contain the following information; cable type, conductor size, circuit number, circuit voltage, cable destination and phase identification. Embossed cable tags shall be placed on all underground telephone cables on each side of all splices, including stub cables and branch cables. Each tag shall be stamped to indicate the cable size, gauge, cable number and number of first and last pair of each group of consecutive pairs which is in the main cable, stub cable or branch cable to which tag is attached. The number of dead pairs, if any shall also be designated.

3.2.1.1 Cable Inspection

The cable reel shall be inspected for correct storage positions, signs of physical damage, and broken end seals. If end seal is broken, moisture shall be removed from cable in accordance with the cable manufacturer's recommendations.

3.2.1.2 Duct Cleaning

Duct shall be cleaned with an assembly that consists of a flexible mandrel (manufacturers standard product in lengths recommended for the specific size and type of duct) that is 6.4 mm (1/4 inch) less than inside diameter of duct, 2 wire brushes, and a rag. The cleaning assembly shall be pulled through conduit a minimum of 2 times or until less than a volume of 131 cubic centimeters (8 cubic inches) of debris is expelled from the duct.

3.2.1.3 Duct Lubrication

The cable lubricant shall be compatible with the cable jacket for cable that is being installed. Application of lubricant shall be in accordance with lubricant manufacturer's recommendations.

3.2.1.4 Cable Installation

3.2.1.4.1 Electrical Cable

The Contractor shall provide a cable feeding truck and a cable pulling winch as required. The Contractor shall provide a pulling grip or pulling eye in accordance with cable manufacturer's recommendations. The pulling grip or pulling eye apparatus shall be attached to polypropylene or manila rope followed by lubricant front end packs and then by power cables. A dynamometer shall be used to monitor pulling tension. Pulling tension shall not exceed cable manufacturer's recommendations. The Contractor shall not allow cables to cross over while cables are being fed into duct. For cable installation in cold weather, cables shall be kept at 10 degrees C (50 degrees F) temperature for at least 24 hours before installation.

3.2.1.5 Cable Installation Plan

The Contractor shall submit a cable installation plan for all cable pulls in accordance with the detail drawings portion of paragraph SUBMITTALS. Cable installation plan shall include:

a. Site layout drawing with cable pulls identified in numeric order of expected pulling sequence and direction of cable pull.

b. List of cable installation equipment.

c. Lubricant manufacturer's application instructions.

d. Procedure for resealing cable ends to prevent moisture from entering cable.

e. Cable pulling tension calculations of all cable pulls.

f. Cable percentage conduit fill.

g. Cable sidewall thrust pressure.

h. Cable minimum bend radius and minimum diameter of pulling wheels used.

i. Cable jam ratio.

j. Maximum allowable pulling tension on each different type and size of conductor.

k. Maximum allowable pulling tension on pulling device.

3.2.2 Duct Line

Cables shall be installed in duct lines where indicated. Cable splices in low-voltage cables shall be made in manholes and handholes only, except as otherwise noted. Cable joints in medium-voltage cables shall be made in manholes or approved pullboxes only. Neutral and grounding conductors shall be installed in the same duct with their associated phase conductors. Primary circuits shall have a ground conductor installed outside the duct in direct contact with the earth or encased in concrete; however, the ground conductor shall be brought inside each equipment item and connected thereto.

3.2.3 Electric Manholes

Cables shall be routed around the interior walls and securely supported from walls on cables racks. Cable routing shall minimize cable crossover, provide access space for maintenance and installation of additional cables, and maintain cable separation in accordance with IEEE C2. Primary cables shall be looped a minimum of 360 degrees inside of each underground vault. Vaults include manholes, manholes or handholes below padmount sectionalizing terminals, and pulling handholes. Primary cables shall be racked to vault walls after looping.

3.3 CABLE JOINTS

Medium-voltage cable joints shall be made by qualified cable splicers only. Qualifications of cable splicers shall be submitted in accordance with paragraph SUBMITTALS. Shields shall be applied as required to continue the shielding system through each entire cable joint. Shields may be integrally molded parts of preformed joints. Shields shall be grounded at each joint or in accordance with manufacturer's recommended practice. Cable joints shall provide insulation and jacket equivalent to that of the associated cable. Armored cable joints shall be enclosed in compound-filled, cast-iron or alloy, splice boxes equipped with stuffing boxes and armor clamps of a suitable type and size for the cable being installed.

3.4 FIREPROOFING

Each medium-voltage cable and conductor in manholes shall be fire-proofed for their entire length within the manhole. Where cables and conductors have been lubricated to enhance pulling into ducts, the lubricant shall be removed from cables and conductors exposed in the manhole before fireproofing. Fire-stops shall be installed in each conduit entering or leaving a manhole.

3.4.1 Tape Method

Before application of fireproofing tape, plastic tape wrapping shall be applied over exposed metallic items such as the cable ground wire, metallic outer covering, or armor to minimize the possibility of corrosion from the fireproofing materials and moisture. Before applying fireproofing tape, irregularities of cables, such as at cable joints, shall be evened out with insulation putty. A flexible conformable polymeric elastomer fireproof tape shall be wrapped tightly around each cable spirally in 1/2 lapped wrapping or in 2 butt-jointed wrappings with the second wrapping covering the joints of the first.

3.4.2 Sprayable Method

Manholes shall be power ventilated until coatings are dry and dewatered and the coatings are cured. Ventilation requirements shall be in accordance with the manufacturer's instruction, but not less than 10 air changes per hour shall be provided. Cable coatings shall be applied by spray, brush, or glove to a wet film thickness that reduces to the dry film thickness approved for fireproofing by FM P7825a. Application methods and necessary safety precautions shall be in accordance with the manufacturers instructions. After application, cable coatings shall be dry to the touch in 1 to 2 hours and fully cured in 48 hours, except where the manufacturer has stated that because of unusual humidity or temperature, longer periods may be necessary.

3.5 DUCT LINES

3.5.1 Requirements

Numbers and sizes of ducts shall be as indicated. Duct lines shall be laid with a minimum slope of 100 mm per 30 M. Depending on the contour of the finished grade, the high-point may be at a terminal, a manhole, a handhole, or between manholes or handholes. Short-radius, coated rigid galvanized steel, manufactured 90-degree duct bends may be used only for pole or equipment risers, unless specifically indicated as acceptable. The minimum manufactured bend radius shall be 450 mm (18 inches) for ducts of less than 80 mm (3 inch) diameter, and 900 mm (36 inches) for ducts 80 mm (3 inches) or greater in diameter. Otherwise, long sweep bends having a minimum radius of 7.6 M shall be used for a change of direction of more than 5 degrees, either horizontally or vertically. Both curved and straight sections may be used to form long sweep bends, but the maximum curve used shall be 30 degrees and manufactured bends shall be used. Ducts shall be provided with end bells whenever duct lines terminate in manholes or handholes.

3.5.2 Treatment

Ducts shall be kept clean of concrete, dirt, or foreign substances during construction. Field cuts requiring tapers shall be made with proper tools and match factory tapers. A coupling recommended by the duct manufacturer shall be used whenever an existing duct is connected to a duct of different material or shape. Ducts shall be stored to avoid warping and deterioration with ends sufficiently plugged to prevent entry of any water or solid substances. Ducts shall be thoroughly cleaned before being laid. Plastic ducts shall be stored on a flat surface and protected from the direct rays of the sun.

3.5.3 Concrete Encasement

Ducts requiring concrete encasements shall comply with NFPA 70, except that electrical duct bank configurations for ducts 150 mm (6 inches) in diameter shall be determined by calculation and as shown on the drawings. The separation between adjacent electric power and communication ducts shall conform to IEEE C2. Duct line encasements shall be monolithic construction. Where a connection is made to a previously poured encasement, the new encasement shall be well bonded or doweled to the existing encasement. The Contractor shall submit proposed bonding method for approval in accordance with the detail drawing portion of paragraph SUBMITTALS. At any point, except railroad and airfield crossings, tops of concrete encasements shall be not less than the cover requirements listed in NFPA 70. At railroad and airfield crossings, duct lines shall be encased with concrete and reinforced as indicated to withstand specified surface loadings. Tops of concrete encasements shall be not less than 1.5 m below

tops of rails or airfield paving unless otherwise indicated. Where ducts are jacked under existing pavement, rigid steel conduit will be installed because of its strength. To protect the corrosion-resistant conduit coating, predrilling or installing conduit inside a larger iron pipe sleeve (jack-and-sleeve) is required. For crossings of existing railroads and airfield pavements greater than 15 m in length, the predrilling method or the jack-and-sleeve method will be used. Separators or spacing blocks shall be made of steel, concrete, plastic, or a combination of these materials placed not farther apart than 1.2 m on centers. Ducts shall be securely anchored to prevent movement during the placement of concrete and joints shall be staggered at least 150 mm vertically.

3.5.4 Installation of Innerduct

Innerduct shall be pulled through duct-manhole system in continuous sections. Splices, joints, couplings, or connections of any type will not be allowed between manholes. Innerduct shall be sealed with polyurethane foam duct seal. This material shall be inserted between the innerduct and the duct. In those innerducts in which cables are placed this material shall also be inserted between the cable and the innerduct. Only one cable shall be installed in a given innerduct. Existing and new unoccupied innerducts shall be trimmed leaving 50 mm (2 inches) exposed. Where multiple innerducts are installed in the same duct, separate colors shall be used.

3.5.5 Installation of Couplings

Joints in each type of duct shall be made up in accordance with the manufacturer's recommendations for the particular type of duct and coupling selected and as approved.

3.5.5.1 Plastic Duct

Duct joints shall be made by brushing a plastic solvent cement on insides of plastic coupling fittings and on outsides of duct ends. Each duct and fitting shall then be slipped together with a quick 1/4-turn twist to set the joint tightly.

3.5.6 Duct Line Markers

Duct line markers shall be provided as indicated. In addition to markers, a 0.127 mm (5 mil) brightly colored plastic tape, not less than 75 mm (3 inches) in width and suitably inscribed at not more than 3 m (10 feet) on centers with a continuous metallic backing and a corrosion-resistant 0.0254 mm (1 mil) metallic foil core to permit easy location of the duct line, shall be placed approximately 300 mm below finished grade levels of such lines.

3.6 MANHOLES, HANDHOLES, AND PULLBOXES

3.6.1 General

Manholes shall be constructed approximately where shown and set with top shoulder of manhole not less than 1M below finished grade. The exact location of each manhole shall be determined after careful consideration has been given to the location of other utilities, grading, and paving. The location of each manhole shall be approved by the Contracting Officer before construction of the manhole is started. Manholes shall be the type noted on the drawings and shall be constructed in accordance with the applicable details as indicated. Top, walls, and bottom shall consist of reinforced concrete. Walls and bottom shall be of monolithic concrete construction. The Contractor may at his option utilize

monolithically constructed precast-concrete manholes having the required strength and inside dimensions as required by the drawings or specifications. In paved areas, frames and covers for manhole and handhole entrances in vehicular traffic areas shall be flush with the finished surface of the paving. In unpaved areas, the top of manhole covers shall be approximately 15 mm above the finished grade. Where existing grades that are higher than finished grades are encountered, concrete assemblies designed for the purpose shall be installed to elevate temporarily the manhole cover to existing grade level. All duct lines entering manholes must be installed on compact soil or otherwise supported when entering a manhole to prevent shear stress on the duct at the point of entrance to the manhole. Ducts entering manholes shall utilize the bottom knockouts, or side group of bottom knockouts, to permit installation of future ducts. Duct lines entering cast-in-place concrete manholes shall be cast in-place with the manhole. Duct lines entering precast concrete manholes through a precast knockout penetration shall be grouted tight with a portland cement mortar. PVC duct lines entering precast manholes through a PVC endbell shall be solvent welded to the endbell. Duct encasement shall be formed near manholes to permit access to remaining knockouts. Ducts shall be sloped and placed to permit installation of future ducts above or to side. A cast metal grille-type sump frame and cover shall be installed over the manhole sump. A cable-pulling iron shall be installed in the wall opposite each duct line entrance.

3.6.2 Electric Manholes

Cables shall be securely supported from walls by hot-dip galvanized cable racks with a plastic coating over the galvanizing and equipped with adjustable hooks and insulators. A minimum of 2 racks shall be installed on each wall of each manhole and not less than 2 spare hooks shall be installed on each cable rack. Insulators shall be made of high-glazed porcelain. Insulators will not be required on spare hooks. Cables shall be racked, tied and identified with a tag.

3.6.3 Communications Manholes

Hot-dip galvanized cable racks shall be installed in each telephone manhole. A minimum of 3 racks on each long wall and one each on each short wall shall be provided. Each cable rack shall be provided with 2 cable hooks. Cables shall be racked, tied and identified with a tag.

3.6.4 Handholes

Handholes shall be located approximately as shown. Handholes shall be of the type noted on the drawings and shall be constructed in accordance with the details shown. Cable racks shall be installed and cables shall be racked, tied and identified with a tag.

3.6.5 Pullboxes

Pullbox tops shall be flush with sidewalks or curbs or placed 15 mm above surrounding grades when remote from curbed roadways or sidewalks. Covers shall be marked "Low-Voltage" and provided with 2 lifting eyes and 2 hold-down bolts. Each box shall have a suitable opening for a ground rod. Conduit, cable, ground rod entrances, and unused openings shall be sealed with mortar.

3.6.6 Ground Rods

A ground rod shall be installed at the manholes, handholes and pullboxes. Ground rods shall be driven into the earth before the manhole floor is poured so that approximately 100 mm of the ground rod will extend above the manhole floor. When precast concrete manholes are used, the top of the ground rod

may be below the manhole floor and a No. 1/0 AWG ground conductor brought into the manhole through a watertight sleeve in the manhole wall.

3.7 PAD-MOUNTED EQUIPMENT INSTALLATION

Pad-mounted equipment, shall be installed on concrete pads in accordance with the manufacturer's published, standard installation drawings and procedures, except that they shall be modified to meet the requirements of this document. Units shall be installed so as not to damage equipment or scratch painted or coated surfaces. After installation, surfaces shall be inspected and scratches touched up with a paint or coating provided by the manufacturer especially for this purpose. Three-phase transformers shall be installed with A-B-C (clockwise) phase sequence. Primary taps shall be set atmidpoint and adjusted up or down to obtain indicated secondary voltage. A vault shall be provided under transformer pads.

3.7.1 Concrete Pads

3.7.1.1 Construction

Concrete pads for pad-mounted electrical equipment may be either pre-fabricated orpoured-in-place. Pads shall be constructed as indicated, except that exact pad dimensions and mounting details are equipment specific and are the responsibility of the Contractor. Tops of concrete pads shall be level and shall project 100 mm above finished paving or grade and sloped to drain. Edges of concrete pads shall have 20 mm chamfer. Conduits for primary, secondary, and grounding conductors shall be set in place prior to placement of concrete pads. Where grounding electrode conductors are installed through concrete pads, PVC conduit sleeves shall be installed through the concrete to provide physical protection. To facilitate cable installation and termination, the concrete pad shall be provided with a rectangular hole below the primary and secondary compartments, sized in accordance with the manufacturer's recommended dimensions. Upon completion of equipment installation the rectangular hole shall be filled with masonry grout. Equipment shall be bolted to pads utilizing expandable anchors.

3.7.1.2 Concrete and Reinforcement

Concrete work shall have minimum 20 MPa compressive strength and conform to the requirements of Section 03300 CAST-IN-PLACE STRUCTURAL CONCRETE. Concrete pad reinforcement shall be in accordance with Section 03200 CONCRETE REINFORCEMENT.

3.7.1.3 Sealing

When the installation is complete, the Contractor shall seal all conduit and other entries into the equipment enclosure with an approved sealing compound. Seals shall be of sufficient strength and durability to protect all energized live parts of the equipment from rodents, insects, or other foreign matter.

3.7.2 Padlocks

Padlocks shall be provided for pad-mounted equipment and for each fence gate. Padlocks shall be keyed as directed by the Contracting Officer.

3.7.3 Fault Indicators.

Indicators shall be installed on primary circuits serving transformers and junctions. Connector selection shall be coordinated with indicators.

3.8 CONNECTIONS BETWEEN AERIAL AND UNDERGROUND SYSTEMS

Connections between aerial and underground systems shall be made as shown. Underground cables shall be extended up poles in conduit to cable terminations. Conduits shall be secured to the poles by 2-hole galvanized steel pipe straps spaced not more than 3 m apart and with 1 strap not more than 300 mm from any bend or termination. Cable guards shall be secured to poles in accordance with the manufacturer's published procedures. Conduits shall be equipped with bushings to protect cables and minimize water entry. Capnut potheads shall be used to terminate medium-voltage multiple-conductor cable. Cables shall be supported by devices separate from the conduit or guard, near their point of exit from the conduit or guard.

3.9 CONNECTIONS TO BUILDINGS

Cables shall be extended into the various buildings as indicated, and shall be connected to the first applicable termination point in each building. Interfacing with building interior conduit systems shall be at conduit stubouts terminating 1.5 m outside of a building and 600 mm below finished grade as specified and provided under Section 16415 ELECTRICAL WORK, INTERIOR. After installation of cables, conduits shall be sealed with caulking compoundto prevent entrance of moisture or gases into buildings.

3.10 GROUNDING

A ground ring consisting of the indicated configuration of bare copper conductors and driven ground rods shall be installed around pad-mounted equipment as shown. Equipment frames of metal-enclosed equipment, and other noncurrent-carrying metal parts, such as cable shields, cable sheaths and armor, and metallic conduit shall be grounded. At least 2 connections shall be provided from a transformer to the ground ring. Metallic frames and covers of handholes and pull boxes shall be grounded by use of a braided, copper ground strap with equivalent ampacity of No. 6 AWG.

3.10.1 Grounding Electrodes

Grounding electrodes shall be installed as shown on the drawings and as follows:

a. Driven rod electrodes - Unless otherwise indicated, ground rods shall be driven into the earth until the tops of the rods are approximately 300 mm below finished grade.

b. Ground ring - A ground ring shall be installed as shown consisting of bare copper conductors installed 600 mm, plus or minus 75 mm, below finished top of soil grade. Ground ring conductors shall be sized as shown but not less than No. 2 AWG, minimum.

c. Additional electrodes - When the required ground resistance is not met, additional electrodes shall be provided interconnected with grounding conductors to achieve the specified ground resistance. The additional electrodes will be up to three, 3 M (10 feet) rods spaced a minimum of 3 M apart [. In high ground resistance, UL listed chemically charged ground

rods may be used. If the resultant resistance exceeds 25 ohms measured not less than 48 hours after rainfall, the Contracting Officer shall be notified immediately.

3.10.2 Grounding and Bonding Connections

Connections above grade shall be made by the fusion-welding process or with bolted solderless connectors, in compliance with UL 467, and those below grade shall be made by a fusion-welding process. Where grounding conductors are connected to aluminum-composition conductors, specially treated or lined copper-to-aluminum connectors suitable for this purpose shall be used.

3.10.3 Grounding and Bonding Conductors

Grounding and bonding conductors include conductors used to bond transformer enclosures and equipment frames to the grounding electrode system. Grounding and bonding conductors shall be sized as shown, and located to provide maximum physical protection. Bends greater than 45 degrees in ground conductors are not permitted. Routing of ground conductors through concrete shall be avoided. When concrete penetration is necessary, nonmetallic conduit shall be cast flush with the points of concrete entrance and exit so as to provide an opening for the ground conductor, and the opening shall be sealed with a suitable compound after installation.

3.10.4 Surge Arrester Grounding

Surge arresters and neutrals shall be bonded directly to the transformer enclosure and then to the grounding electrode system with a bare copper conductor, sized as shown. Lead lengths shall be kept as short as practicable with no kinks or sharp bends.

3.10.5 Manhole, Handhole, or Concrete Pullbox Grounding

Ground rods installed in manholes, handholes, or concrete pullboxes shall be connected to cable racks, cable-pulling irons, the cable shielding, metallic sheath, and armor at each cable joint or splice by means of a No. 4 AWG braided tinned copper wire. Connections to metallic cable sheaths shall be by means of tinned terminals soldered to ground wires and to cable sheaths. Care shall be taken in soldering not to damage metallic cable sheaths or shields. Ground rods shall be protected with a double wrapping of pressure-sensitive plastic tape for a distance of 50 mm above and 150 mm below concrete penetrations. Grounding electrode conductors shall be neatly and firmly attached to manhole or handhole walls and the amount of exposed bare wire shall be held to a minimum.

3.10.6 Riser Pole Grounding

A single continuous vertical grounding electrode conductor shall be installed on each riser pole and connected directly to the grounding electrodes indicated on the drawings or required by these specifications. All equipment, neutrals, surge arresters, and items required to be grounded shall be connected directly to this vertical conductor. The grounding electrode conductor shall be sized as shown. Grounding electrode conductors shall be stapled to wood poles at intervals not exceeding 600 mm.

3.10.7 Telephone System Grounding

Except where specifically indicated otherwise, all exposed noncurrent carrying metallic parts of the telephone equipment, cable sheaths, cable splices, and terminals shall be grounded.

3.11 FIELD TESTING

3.11.1 General

Field testing shall be performed in the presence of the Contracting Officer. The Contractor shall notify the Contracting Officer 5 days prior to conducting tests. The Contractor shall furnish all materials, labor, and equipment necessary to conduct field tests. The Contractor shall perform all tests and inspections recommended by the manufacturer unless specifically waived by the Contracting Officer. The Contractor shall maintain a written record of all tests which includes date, test performed, personnel involved, devices tested, serial number and name of test equipment, and test results. Field test reports shall be signed and dated by the Contractor.

3.11.2 Safety

The Contractor shall provide and use safety devices such as rubber gloves, protective barriers, and danger signs to protect and warn personnel in the test vicinity. The Contractor shall replace any devices or equipment which are damaged due to improper test procedures or handling.

3.11.3 Ground-Resistance Tests

The resistance of each grounding electrode system shall be measured using the fall-of-potential method defined in IEEE Std 81. Ground resistance measurements shall be made before the electrical distribution system is energized and shall be made in normally dry conditions not less than 48 hours after the last rainfall. Resistance measurements of separate grounding electrode systems shall be made before the systems are bonded together below grade. The combined resistance of separate systems may be used to meet the required resistance, but the specified number of electrodes must still be provided.

a. Single rod electrode - 25 ohms.

b. Multiple rod electrodes - 25 ohms.

c. Ground ring - 25 ohms.

3.11.4 Medium-Voltage Cable Test

After installation and before the operating test or connection to an existing system, the medium-voltage cable system shall be given a high potential test. Direct-current voltage shall be applied on each phase conductor of the system by connecting conductors as one terminal and connecting grounds or metallic shieldings or sheaths of the cable as the other terminal for each test. Prior to making the test, the cables shall be isolated by opening applicable protective devices and disconnecting equipment. The test shall be conducted with all splices, connectors, and terminations in place. The method, voltage, length of time, and other characteristics of the test for initial installation shall be in accordance with NEMA WC 7 or NEMA WC 8 for the particular type of cable installed, except that 28 kV and 35 kV insulation test voltages shall be in accordance with either AEIC CS5 or AEIC CS6 as applicable, and shall not exceed the recommendations of IEEE Std 404 for cable joints and IEEE Std 48 for cable terminations unless the cable and accessory manufacturers indicate higher voltages are acceptable for testing. Should any cable fail due to a weakness of conductor insulation or due to defects or injuries incidental to the installation or

because of improper installation of cable, cable joints, terminations, or other connections, the Contractor shall make necessary repairs or replace cables as directed. Repaired or replaced cables shall be retested.

3.11.5 Low-Voltage Cable Test

Low-voltage cable, complete with splices, shall be tested for insulation resistance after the cables are installed, in their final configuration, ready for connection to the equipment, and prior to energization. The test voltage shall be 500 volts dc, applied for one minute between each conductor and ground and between all possible combinations conductors in the same trench, duct, or cable, with all other conductors in the same trench, duct, or conduit. The minimum value of insulation shall be:

R in megohms = (rated voltage in kV + 1) x 304,800/(length of cable in meters)

Each cable failing this test shall be repaired or replaced. The repaired cable shall be retested until failures have been eliminated.

3.11.6 Telephone Cable Test

The following acceptance tests shall be performed in accordance with REA PC-4:

a. Shield continuity.

b. Conductor continuity.

c. Conductor insulation resistance.

d. Structural return loss.

e. Cable insertion loss and loss margin at carrier frequencies.

f. Shield ground for single jacketed cables.

g. DC loop resistance.

3.11.7 Liquid-Filled Transformer Tests

The following field tests shall be performed on all liquid-filled transformers. Pass-fail criteria shall be in accordance with transformer manufacturer's specifications.

a. Insulation resistance test phase-to-ground.

b. Turns ratio test.

c. Correct phase sequence.

d. Correct operation of tap changer.

3.11.8 Pre-Energization Services

Calibration, testing, adjustment, and placing into service of the installation shall be accomplished by a manufacturer's product field service engineer or independent testing company with a minimum of 2 years of current product experience. The following services shall be performed on the equipment listed below. These services shall be performed subsequent to testing but prior to the initial energization. The equipment shall be inspected to ensure that installation is in compliance with the recommendations of the manufacturer and as shown on the detail drawings. Terminations of conductors at major equipment shall be inspected to ensure the adequacy of connections. Bare and insulated conductors between such terminations shall be inspected to detect possible damage during installation. If factory tests were not performed on completed assemblies, tests shall be performed after the installation of completed assemblies. Components shall be inspected for damage caused during installation or shipment to ensure packaging materials have been removed. Components capable of being both manually and electrically operated shall be operated manually prior to the first electrical operation. Components capable of being calibrated, adjusted, and tested shall be calibrated, adjusted, and tested in accordance with the instructions of the equipment manufacturer. Items for which such services shall be provided, but are not limited to, are the following:

Pad-mounted transformers

3.11.9 Operating Tests

After the installation is completed, and at such times as the Contracting Officer may direct, the Contractor shall conduct operating tests for approval. The equipment shall be demonstrated to operate in accordance with the requirements herein. An operating test report shall be submitted in accordance with paragraph SUBMITTALS.

3.12 MANUFACTURER'S FIELD SERVICE

3.12.1 Installation Engineer

After delivery of the equipment, the Contractor shall furnish one or more field engineers, regularly employed by the equipment manufacturer to supervise the installation of the equipment, assist in the performance of the onsite tests, initial operation, and instruct personnel as to the operational and maintenance features of the equipment.

3.13 ACCEPTANCE

Final acceptance of the facility will not be given until the Contractor has successfully completed all tests and after all defects in installation, material or operation have been corrected.

END OF SECTION

This page intentionally blank

SECTION 16415

ELECTRICAL WORK, INTERIOR

1 PART 1 GENERAL

1.1 REFERENCES

The publications listed below form a part of this specification to the extent referenced. The publications are referred to in the text by basic designation only.

AMERICAN NATIONAL STANDARDS INSTITUTE (ANSI)

ANSI C12.1	(1995) Code for Electricity Metering
ANSI C12.4	(1984; R 1996) Mechanical Demand Registers
ANSI C12.10	(1987) Electromechanical Watthour Meters
ANSI C12.11	(1987; R 1993) Instrument Transformers for Revenue Metering, 10 kV BIL Through 350 kV BIL (0.6 kV NSV Through 69 kV NSV)
ANSI C39.1	(1981; R 1992) Requirements for Electrical Analog Indicating Instruments
ANSI C82.1	(1985; C82.1a; C82.1b; C82.1c; C82.1d; C82.1e; R 1992) Specifications for Fluorescent Lamp Ballasts
ANSI C82.4	(1992) Ballasts for High-Intensity-Discharge and Low-Pressure Sodium Lamps (Multiple-Supply Type)

AMERICAN SOCIETY FOR TESTING AND MATERIALS (ASTM)

ASTM B 1	(1995) Hard-Drawn Copper Wire
ASTM B 8	(1995) Concentric-Lay-Stranded Copper Conductors, Hard, Medium-Hard, or Soft
ASTM D 709	(1992; R 1997) Laminated Thermosetting Materials

CODE OF FEDERAL REGULATIONS (CFR)

47 CFR 18	Industrial, Scientific, and Medical Equipment

INSTITUTE OF ELECTRICAL AND ELECTRONICS ENGINEERS (IEEE)

IEEE C2	(1997) National Electrical Safety Code

IEEE ANSI/IEEE C37.20.1	(1993) Metal-Enclosed Low-Voltage Power Circuit-Breaker Switchgear
IEEE ANSI/IEEE C57.13	(1993) Instrument Transformers
IEEE C62.41	(1991; R 1995) Surge Voltages in Low-Voltage AC Power Circuits
IEEE Std 81	(1983) Guide for Measuring Earth Resistivity, Ground Impedance, and Earth Surface Potentials of a Ground System (Part 1)

NATIONAL ELECTRICAL MANUFACTURERS ASSOCIATION (NEMA)

NEMA 250	(1991) Enclosures for Electrical Equipment (1000 Volts Maximum)
NEMA AB 1	(1993) Molded Case Circuit Breakers and Molded Case Switches
NEMA FU 1	(1986) Low Voltage Cartridge Fuses
NEMA ICS 1	(1993) Industrial Control and Systems
NEMA ICS 2	(1993) Industrial Control and Systems Controllers, Contactors, and Overload Relays Rated Not More Than 2,000 Volts AC or 750 Volts DC
NEMA ICS 3	(1993) Industrial Control and Systems Factory Built Assemblies
NEMA ICS 6	(1993) Industrial Control and Systems Enclosures
NEMA LE 4	(1987) Recessed Luminaires, Ceiling Compatibility
NEMA MG 1	(1993; Rev 1; Rev 2; Rev 3) Motors and Generators
NEMA MG 10	(1994) Energy Management Guide for Selection and Use of Polyphase Motors
NEMA OS 1	(1989) Sheet-Steel Outlet Boxes, Device Boxes, Covers, and Box Supports
NEMA OS 2	(1986; Errata Aug 1986; R 1991) Nonmetallic Outlet Boxes, Device Boxes, Covers and Box Supports

NEMA PB 1	(1990) Panelboards
NEMA PB 2	(1995) Deadfront Distribution Switchboards
NEMA RN 1	(1989) Polyvinyl-Chloride (PVC) Externally Coated Galvanized Rigid Steel Conduit and Intermediate Metal Conduit
NEMA WD 1	(1983; R 1989) General Requirements for Wiring Devices
NEMA WD 6	(1988) Wiring Devices - Dimensional Requirements

NATIONAL FIRE PROTECTION ASSOCIATION (NFPA)

NFPA 70	(1999) National Electrical Code
NFPA 101	(1997; Errata 97-1) Life Safety Code

UNDERWRITERS LABORATORIES (UL)

UL 1	(1993; Rev thru Jan 1995) Flexible Metal Conduit
UL 6	(1997) Rigid Metal Conduit
UL 20	(1995; Rev thru Jan 1998) General-Use Snap Switches
UL 44	(1997; Rev Aug 1997) Thermoset-Insulated Wires and Cables
UL 50	(1995; Rev thru Oct 1997) Enclosures for Electrical Equipment
UL 67	(1993; Rev thru Nov 1995) Panelboards
UL 83	(1996; Rev Sep 1997) Thermoplastic-Insulated Wires and Cables
UL 98	(1994; R thru Oct 1995) Enclosed and Dead-Front Switches
UL 198B	(1995) Class H Fuses
UL 198C	(1986; Rev thru Feb 1998) High-Interrupting-Capacity Fuses, Current-Limiting Types
UL 198D	(1995) Class K Fuses
UL 198E	(1988; Rev Jul 1988) Class R Fuses
UL 198G	(1988; Rev May 1988) Fuses for Supplementary Overcurrent Protection

UL 198H	(1988; Rev thru Nov 1993) Class T Fuses
UL 198L	(1995; Rev May 1995) D-C Fuses for Industrial Use
UL 360	(1996; Rev thru Oct 1997) Liquid-Tight Flexible Steel Conduit
UL 467	(1993; Rev thru Aug 1996) Grounding and Bonding Equipment
UL 486A	(1997) Wire Connectors and Soldering Lugs for Use with Copper Conductors
UL 486C	(1997) Splicing Wire Connectors
UL 486E	(1994; Rev thru Feb 1997) Equipment Wiring Terminals for Use with Aluminum and/or Copper Conductors

UL 489 (1996; Rev thru Nov 1997) Molded-Case Circuit Breakers, Molded-Case Switches, and Circuit-Breaker Enclosures

UL 508	(1993; Rev thru Oct 1997) Industrial Control Equipment
UL 510	(1994; Rev thru Nov 1997) Insulating Tape
UL 512	(1993; R Dec 1995) Fuseholders
UL 514A	(1996) Metallic Outlet Boxes
UL 514B	(1997) Fittings for Conduit and Outlet Boxes
UL 514C	(1996) Nonmetallic Outlet Boxes, Flush-Device Boxes, and Covers

UL 542 (1994; Rev May 1997) Lampholders, Starters, and Starter Holders for Fluorescent Lamps

UL 797	(1993; Rev thru Mar 1997) Electrical Metallic Tubing

UL 817 (1994; Rev thru Aug 1997) Cord Sets and Power-Supply Cords

UL 854	(1996) Service-Entrance Cables

UL 869A (1993; Rev thru Apr 1996) Reference Standard for Service Equipment

UL 891	(1994; Rev thru Jan 1995) Dead-Front Switchboards
UL 924	(1995; Rev thru Oct 97) Emergency Lighting and Power Equipment

UL 935	(1995; Rev thru Apr 1997)Fluorescent-Lamp Ballasts
UL 943	(1993; Rev thru Mar 1997)Ground-Fault Circuit-Interrupters
UL 1004	(1994; Rev thru Feb 1997) Electric Motors
UL 1029	(1994; Rev thru Sep 1995) High-Intensity-Discharge Lamp Ballasts
UL 1242	(1996; Rev Apr 1997) Intermediate Metal Conduit
UL 1449	(1985; Errata Apr 1986; Rev May 1995) Transient Voltage Surge Suppressors
UL 1570	(1995; Rev thru Jun 1997) Fluorescent Lighting Fixtures
UL 1571	(1995; Rev thru Jun 97) Incandescent Lighting Fixtures
UL 1572	(1995; Rev thru Jun 97) High Intensity Discharge Lighting Fixtures
UL 1660	(1994; Rev Jan 1996) Liquid-Tight Flexible Nonmetallic Conduit
UL Elec Const Dir	(1997) Electrical Construction Equipment Directory

1.2 GENERAL

1.2.1 Rules

The installation shall conform to the requirements of NFPA 70 and NFPA 101, unless more stringent requirements are indicated or shown.

1.2.2 Coordination

The drawings indicate the extent and the general location and arrangement of equipment, conduit, and wiring. The Contractor shall become familiar with all details of the work and verify all dimensions in the field so that the outlets and equipment shall be properly located and readily accessible. Lighting fixtures, outlets, and other equipment and materials shall be located to avoid interference with mechanical or structural features; otherwise, lighting fixtures shall be symmetrically located according to the room arrangement when uniform illumination is required, or asymmetrically located to suit conditions fixed by design and shown. Raceways, junction and outlet boxes, and lighting fixtures shall not be supported from sheet metal roof decks. If any conflicts occur necessitating departures from the drawings, details of and reasons for departures shall be submitted and approved prior to implementing any change. The Contractor shall coordinate electrical work with the HVAC and electrical drawings and specifications and provide power related wiring.

1.2.3 Special Environments

1.2.3.1 Weatherproof Locations

Wiring, Fixtures, and equipment in designated locations shall conform to NFPA 70 requirements for installation in damp or wet locations.

1.2.3.2 Ducts, Plenums and Other Air-Handling Spaces

Wiring and equipment in ducts, plenums and other air-handling spaces shall be installed using materials and methods in conformance with NFPA 70 unless more stringent requirements are indicated in this specification or on the contract drawings.

1.2.4 Standard Products

Material and equipment shall be a standard product of a manufacturer regularly engaged in the manufacture of the product and shall essentially duplicate items that have been in satisfactory use for at least 2 years prior to bid opening.

1.2.5 NAMEPLATES

1.2.5.1 Identification Nameplates

Major items of electrical equipment and major components shall be permanently marked with an identification name to identify the equipment by type or function and specific unit number as indicated. Designation of motors shall coincide with their designation in the motor control center or panel. Unless otherwise specified, identification nameplates shall be made of laminated plastic in accordance with ASTM D 709 with black outer layers and a white core. Edges shall be chamfered. Plates shall be fastened with black-finished round-head drive screws, except motors, or approved nonadhesive metal fasteners. When the nameplate is to be installed on an irregular-shaped object, the Contractor shall devise an approved support suitable for the application and ensure the proper installation of the supports and nameplates. In all instances, the nameplate shall be installed in a conspicuous location. At the option of the Contractor, the equipment manufacturer's standard embossed nameplate material with black paint-filled letters may be furnished in lieu of laminated plastic. The front of each panelboard, motor control center, switchgear, and switchboard shall have a nameplate to indicate the phase letter, corresponding color and arrangement of the phase conductors. The following equipment, as a minimum, shall be provided with identification nameplates:

Minimum 6.4 mm High Letters	Minimum 3.2 mm High Letters
Panelboards	Control Power Transformers
Starters	Control Devices
Safety Switches	Instrument Transformers
Equipment Enclosures	
Switchboards	
Motors	

Each panel, section, or unit in motor control centers, switchgear or similar assemblies shall be provided with a nameplate in addition to nameplates listed above, which shall be provided for individual compartments in the respective assembly, including nameplates which identify "future," "spare," and "dedicated" or "equipped spaces."

1.2.6 As-Built Drawings

Following the project completion or turnover, within 30 days the Contractor shall furnish 2 sets of as-built drawings to the Contracting Officer.

1.2.7 Recessed Light Fixtures (RLF) Option

The Contractor has the option to substitute inch-pound (I-P) RLF to metric RLF. This option shall be coordinated with Section 09510 ACOUSTICAL CEILINGS.

1.3 SUBMITTALS

Government approval is required for submittals with a "GA" designation; submittals having an "FIO" designation are for information only. The following shall be submitted in accordance with Section 01330 SUBMITTAL PROCEDURES:

SD-01 Data

Manufacturer's Catalog; FIO.

Data composed of catalog cuts, brochures, circulars, specifications, product data, and printed information in sufficient detail and scope to verify compliance with the requirements of the contract documents.

Material, Equipment, and Fixture Lists; FIO.

A complete itemized listing of equipment and materials proposed for incorporation into the work. Each entry shall include an item number, the quantity of items proposed, and the name of the manufacturer of each item.

Installation Procedures; FIO.

Installation procedures for rotating equipment, transformers, switchgear, battery systems, voltage regulators, and grounding resistors. Procedures shall include diagrams, instructions, and precautions required to install, adjust, calibrate, and test devices and equipment.

SD-04 Drawings

Interior Electrical Equipment; FIO.

Detail drawings consisting of equipment drawings, illustrations, schedules, instructions, diagrams, and other information necessary to define the installation. Detail drawings shall show the rating of items and systems and how the components of an item and system are assembled, function together, and how they

will be installed on the project. Data and drawings for component parts of an item or system shall be coordinated and submitted as a unit. Data and drawings shall be coordinated and included in a single submission. Multiple submissions for the same equipment or system are not acceptable except where prior approval has been obtained from the Contracting Officer. In such cases, a list of data to be submitted later shall be included with the first submission. Detail drawings shall show physical arrangement, construction details, connections, finishes, materials used in fabrication, provisions for conduit or busway entrance, access requirements for installation and maintenance, physical size, electrical characteristics, foundation and support details, and equipment weight. Drawings shall be drawn to scale and/or dimensioned. Optional items shall be clearly identified as included or excluded. Detail drawings shall as a minimum include:

a. Motors and rotating machinery.
b. Single line electrical diagrams including primary, metering, sensing and relaying, control wiring, and control logic.

Structural drawings showing the structural or physical features of major equipment items, components, assemblies, and structures, including foundations or other types of supports for equipment and conductors. These drawings shall include accurately scaled or dimensioned outline and arrangement or layout drawings to show the physical size of equipment and components and the relative arrangement and physical connection of related components. Weights of equipment, components and assemblies shall be provided when required to verify the adequacy of design and proposed construction of foundations or other types of supports. Dynamic forces shall be stated for switching devices when such forces must be considered in the design of support structures. The appropriate detail drawings shall show the provisions for leveling, anchoring, and connecting all items during installation, and shall include any recommendations made by the manufacturer.

Electrical drawings including single-line and three-line diagrams, and schematics or elementary diagrams of each electrical system; internal wiring and field connection diagrams of each electrical device when published by the manufacturer; wiring diagrams of cabinets, panels, units, or separate mountings; interconnection diagrams that show the wiring between separate components of assemblies; field connection diagrams that show the termination of wiring routed between separate items of equipment; internal wiring diagrams of equipment showing wiring as actually provided for this project. Field wiring connections shall be clearly identified.

If departures from the contract drawings are deemed necessary by the Contractor, complete details of such departures, including changes in related portions of the project and the reasons why, shall be submitted with the detail drawings. Approved departures shall be made at no additional cost to the Government.

As-Built Drawings; FIO.

The as-built drawings shall be a record of the construction as installed. The drawings shall include all the information shown on the contract drawings, deviations, modifications, and changes from the contract drawings, however minor. The as-built drawings shall be kept at the job site and updated daily. The as-built drawings shall be a full-sized set of prints marked to reflect all deviations, changes, and modifications. The as-built drawings shall be complete and show the location, size, dimensions, part identification, and other information. Additional sheets may be added. The as-built drawings shall be jointly inspected for accuracy and completeness by the Contractor's quality control representative and by the Contracting Officer prior to the submission of each monthly pay estimate. Upon completion of the

work, the Contractor shall submit three full sized sets of the marked prints to the Contracting Officer for approval. If upon review, the as-built drawings are found to contain errors and/or omissions, they will be returned to the Contractor for correction. The Contractor shall correct and return the as-built drawings to the Contracting Officer for approval within ten calendar days from the time the drawings are returned to the Contractor.

SD-08 Statements

Onsite Test; GA.

A detailed description of the Contractor's proposed procedures for on-site tests.

SD-09 Reports

Factory Test Reports; GA.

Six copies of the information described below in 216 x 280 mm binders having a minimum of 5 rings from which material may readily be removed and replaced, including a separate section for each test. Sections shall be separated by heavy plastic dividers with tabs.

a. A list of equipment used, with calibration certifications.

b. A copy of measurements taken.

c. The dates of testing.

d. The equipment and values to be verified.

e. The conditions specified for the test.

f. The test results, signed and dated.

g. A description of adjustments made.

Field Test Plan; GA.

A detailed description of the Contractor's proposed procedures for onsite test submitted 20 days prior to testing the installed system. No field test will be performed until the test plan is approved. The test plan shall consist of complete field test procedures including tests to be performed, test equipment required, and tolerance limits.

Field Test Reports; GA.

Six copies of the information described below in 216 x 280 mm binders having a minimum of 5 rings from which material may readily be removed and replaced, including a separate section for each test. Sections shall be separated by heavy plastic dividers with tabs.

a. A list of equipment used, with calibration certifications.

b. A copy of measurements taken.

c. The dates of testing.

d. The equipment and values to be verified.

e. The conditions specified for the test.

f. The test results, signed and dated.

g. A description of adjustments made.

h. Final position of controls and device settings.

SD-13 Certificates

Materials and Equipment; GA.

The label or listing of the Underwriters Laboratories, Inc., will be accepted as evidence that the materials or equipment conform to the applicable standards of that agency. In lieu of this label or listing, a statement from a nationally recognized, adequately equipped testing agency indicating that the items have been tested in accordance with required procedures and that the materials and equipment comply with all contract requirements will be accepted. However, materials and equipment installed in hazardous locations must bear the UL label unless the data submitted from other testing agency is specifically approved in writing by the Contracting Officer. Items which are required to be listed and labeled in accordance with Underwriters Laboratories must be affixed with a UL label that states that it is UL listed. No exceptions or waivers will be granted to this requirement. Materials and equipment will be approved based on the manufacturer's published data.

For other than equipment and materials specified to conform to UL publications, a manufacturer's statement indicating complete compliance with the applicable standard of the American Society for Testing and Materials, National Electrical Manufacturers Association, or other commercial standard, is acceptable.

1.4 WORKMANSHIP

Materials and equipment shall be installed in accordance with NFPA 70, recommendations of the manufacturer, and as shown.

2 PART 2 PRODUCTS

Products shall conform to the respective publications and other requirements specified below. Materials and equipment not listed below shall be as specified elsewhere in this section. Items of the same classification shall be identical including equipment, assemblies, parts, and components.

2.1 CABLES AND WIRES

Conductors No. 8 AWG and larger diameter shall be stranded. Conductors No. 10 AWG and smaller diameter shall be solid, except that conductors for remote control, alarm, and signal circuits, classes 1, 2,

and 3, shall be stranded unless specifically indicated otherwise. Conductor sizes and ampacities shown are based on copper, unless indicated otherwise. All conductors shall be copper.

2.1.1 Equipment Manufacturer Requirements

When manufacturer's equipment requires copper conductors at the terminations or requires copper conductors to be provided between components of equipment, provide copper conductors or splices, splice boxes, and other work required to meet manufacturer's requirements.

2.1.2 Aluminum Conductors

Aluminum conductors shall not be used.

2.1.3 Insulation

Unless indicated otherwise, or required by NFPA 70, power and lighting wires shall be 600-volt, Type THWN, THHN, or THW conforming to UL 83 or RHW conforming to UL 44, except that grounding wire may be type TW conforming to UL 83; remote-control and signal circuits shall be Type TW, THW or TF, conforming to UL 83. Where lighting fixtures require 90-degree Centigrade (C) conductors, provide only conductors with 90-degree C insulation or better.

2.1.4 Bonding Conductors

ASTM B 1, solid bare copper wire for sizes No. 8 AWG and smaller diameter; ASTM B 8, Class B, stranded bare copper wire for sizes No. 6 AWG and larger diameter.

2.1.5 Service Entrance Cables

Service entrance (SE) and underground service entrance (USE) cables, UL 854.

2.1.6 Cord Sets and Power-Supply Cords

UL 817.

2.2 TRANSIENT VOLTAGE SURGE PROTECTION

Transient voltage surge suppressors shall be provided as indicated. Surge suppressors shall meet the requirements of IEEE C62.41 and be UL listed and labeled as having been tested in accordance with UL 1449. Surge suppressor ratings shall be 208 volts rms, operating voltage; 60 Hz; 3-phase]; 4 wire with ground; transient suppression voltage (peak let-through voltage) of 330 volts. Fuses shall not be used as surge suppression.

2.3 CHARGERS, BATTERY

NOT USED

2.4 CIRCUIT BREAKERS

2.4.1 Molded-Case Circuit Breakers

Molded-case circuit breakers shall conform to NEMA AB 1 and UL 489. Circuit breakers may be installed in panelboards, switchboards, enclosures, motor control centers, or combination motor controllers.

2.4.1.1 Construction

Circuit breakers shall be suitable for mounting and operating in any position. Lug shall be listed for copper conductors onlyin accordance with UL 486E. Single-pole circuit breakers shall be full module size with not more than one pole per module. Multi-pole circuit breakers shall be of the common-trip type having a single operating handle such that an overload or short circuit on any one pole will result in all poles opening simultaneously. Sizes of 100 amperes or less may consist of single-pole breakers permanently factory assembled into a multi-pole unit having an internal, mechanical, nontamperable common-trip mechanism and external handle ties. All circuit breakers shall have a quick-make, quick-break overcenter toggle-type mechanism, and the handle mechanism shall be trip-free to prevent holding the contacts closed against a short-circuit or sustained overload. All circuit breaker handles shall assume a position between "ON" and "OFF" when tripped automatically. All ratings shall be clearly visible.

2.4.1.2 Ratings

Voltage ratings shall be not less than the applicable circuit voltage. The interrupting rating of the circuit breakers shall be at least equal to the available short-circuit current at the line terminals of the circuit breaker and correspond to the UL listed integrated short-circuit current rating specified for the panelboards and switchboards. Molded-case circuit breakers shall have nominal voltage ratings, maximum continuous-current ratings, and maximum short-circuit interrupting ratings in accordance with NEMA AB 1. Ratings shall be coordinated with system X/R ratio.

2.4.1.3 Thermal-Magnetic Trip Elements

Thermal magnetic circuit breakers shall be provided as shown. Automatic operation shall be obtained by means of thermal-magnetic tripping devices located in each pole providing inverse time delay and instantaneous circuit protection. The instantaneous magnetic trip shall be adjustable and accessible from the front of all circuit breakers on frame sizes above 150 amperes.

2.4.2 Current-Limiting Circuit Breakers

Current-limiting circuit breakers shall be provided as shown. Current-limiting circuit breakers shall limit the let-through I square times t to a value less than the I square times t of one-half cycle of the symmetrical short-circuit current waveform. On fault currents below the threshold of limitation, breakers shall provide conventional overload and short-circuit protection. Integrally-fused circuit breakers shall not be used.

2.4.3 HACR Circuit Breakers

Circuit breakers 60 amperes or below, 240 volts, 1-pole or 2-pole, intended to protect multi-motor and combination-load installations involved in heating, air conditioning, and refrigerating equipment shall be marked "Listed HACR Type."

2.4.4 Ground Fault Circuit Interrupters

UL 943. Breakers equipped with ground fault circuit interrupters shall have ground fault class, interrupting capacity, and voltage and current ratings as indicated.

2.5 CONDUIT AND TUBING

2.5.1 Electrical, Zinc-Coated Steel Metallic Tubing (EMT)

UL 797

2.5.2 Flexible Conduit, Steel and Plastic

General-purpose type, UL 1; liquid tight, UL 360, and UL 1660.

2.5.3 Intermediate Metal Conduit

UL 1242.

2.5.4 PVC Coated Rigid Steel Conduit

NEMA RN 1.

2.5.5 Rigid Metal Conduit

UL 6.

2.6 CONDUIT AND DEVICE BOXES AND FITTINGS

2.6.1 Boxes, Metallic Outlet

NEMA OS 1 and UL 514C.

2.6.2 Boxes, Nonmetallic, Outlet and Flush-Device Boxes and Covers

NEMA OS 2 and UL 514C.

2.6.3 Boxes, Switch (Enclosed), Surface-Mounted

UL 98.

2.6.4 Fittings for Conduit and Outlet Boxes

UL 514B.

2.7 CONDUIT COATINGS PLASTIC RESIN SYSTEM

NEMA RN 1, Type A-40.

2.8 CONNECTORS, WIRE PRESSURE

2.8.1 For Use With Copper Conductors

UL 486A.

2.9 ELECTRICAL GROUNDING AND BONDING EQUIPMENT

UL 467.

2.9.1 Ground Rods

Ground rods shall be of copper-clad steel conforming to UL 467 not less than 19.1 mm in diameter by 3.1 meter in length of the sectional type driven full length into the earth.

2.9.2 Ground Bus

The ground bus shall be bare conductor or flat copper in one piece, if practicable.

2.10 ENCLOSURES

NEMA ICS 6 or NEMA 250 unless otherwise specified.

2.10.1 Cabinets and Boxes

Cabinets and boxes with volume greater than 0.0164 cubic meters shall be in accordance with UL 50, hot-dip, zinc-coated, if sheet steel.

2.10.2 Circuit Breaker Enclosures

UL 489.

2.11 FIXTURES, LIGHTING AND FIXTURE ACCESSORIES/COMPONENTS

Fixtures shall be as shown on contract drawings. Fixtures, accessories and components, including ballasts, lampholders, lamps, starters and starter holders, shall conform to industry standards specified below.

2.11.1 Fixture, Auxiliary or Emergency

UL 924.

2.11.2 Incandescent Fixture

NEMA LE 4 for ceiling compatibility of recessed fixtures and UL 1571.

2.11.3 Fluorescent

a. Fixture: NEMA LE 4 for ceiling compatibility of recessed fixtures and UL 1570. Fixtures shall be plainly marked for proper lamp and ballast type to identify lamp diameter, wattage, color and start type. Marking shall be readily visible to service personnel, but not visible from normal viewing angles.

b. Ballasts:

(1) Magnetic ballast, energy-saving, high power factor, Class P, automatic-resetting Type, approved for the application by the Certified Ballast Manufacturers: ANSI C82.1 and UL 935. Two-lamp ballasts shall be used for each pair of lamps within a fixture or within continuous mounted fixtures. Single-lamp ballasts shall be used for individually mounted single-lamp fixtures and where an odd single-lamp fixture occurs at the end of a continuous group. Magnetic fluorescent lamp ballasts shall have a Ballast Efficacy Factor (BEF) not less than shown in the following table:

MAGNETIC FLUORESCENT BALLAST EFFICACY FACTORS*

Design starting temperature above 4.4 degrees C with 60 Hz input frequency

NUMBER OF LAMPS	LAMP TYPE	NOMINAL OPERATIONAL INPUT VOLTAGE	MAX. LAMP OPERATING CURRENT	MIN. BALLAST EFFICACY FACTOR
1	1.219 m (4 ft) rapid start	120 or 277	less than 1000 m amp	1.805
2	1.219 m (4 ft) rapid start	120	less than 1000 m amp	1.060
2	1.219 m (4 ft) rapid start	277	less than 1000 m amp	1.050
2	2.438 m (8 ft) slim-line	120 - 277	less than 1000 m amp	0.570
2	2.438 m (8 ft) high output,	120 - 277	less than 1000 m amp rapid start	0.390

```
* For ballasts not specifically designed for use with dimming controls
```

The BEF is calculated using the formula:

BEF = Ballast Factor, (in percent) / Power Input

Where Power Input = Total Wattage of Combined Lamps and Ballasts.

(2) Electronic Ballast. Electronic ballasts shall consist of a rectifier, high frequency inverter, and power control and regulation circuitry. The ballasts shall be UL listed, Class P, with a Class A sound rating and shall contain no PCBs. Ballasts shall meet 47 CFR 18 for electromagnetic interference and shall not interfere with the operation of other electrical equipment. Design shall withstand line transients per IEEE C62.41, Category A. Unless otherwise indicated, the minimum number of ballasts shall be used to serve each individual fixture, using one, two, three or four lamp ballasts. A single ballast may be used to serve multiple fixtures if they are continuous mounted, factory manufactured for that installation with an integral wireway, and are identically controlled.

(a) Light output regulation shall be +/- 10%.

(b) Voltage input regulation shall be +/- 10%.

(c) Lamp current crest factor shall be no more than 1.6.

(d) Ballast factor shall be not less than 85% nor more than 100%, unless otherwise indicated.

(e) A 60 Hz filter shall be provided. Flicker shall be no more than 10% with any lamp suitable for the ballast.

(f) Ballast case temperature shall not exceed 25 degree Celsius rise above 40 degree Celsius ambient, when tested in accordance with UL 935.

(g) Total harmonic distortion shall be in the range of 10-20%.

(h) Power factor shall not be less than 0.95.

(i) Ballasts shall operate at a frequency of 20 kHz or more.

(j) Operating filament voltage shall be 2.5 to 4.5 volts.

(k) Warranty. Three year full warranty including a $10 labor allowance.

(l) Ballast Efficacy Factor (BEF) shall be in accordance with the following table. Ballasts and lamps shall be matching rapid start or instant start as indicated on the following table. If 32W-F32-T8 lamps and ballasts are used, they must be either all rapid start or all instant start.

ELECTRONIC FLUORESCENT BALLAST EFFICACY FACTORS*

LAMP TYPE	TYPE OF STARTER & LAMP	NOMINAL OPERATIONAL INPUT VOLTAGE	NUMBER OF LAMPS	MIN. BALLAST EFFICACY FACTOR
40W F40 T12	rapid start	120 or 277 V	1	2.3
			2	1.2
			3	0.8
			4	0.6
34W F40 T12	rapid start	120 or 277 V	1	2.6
			2	1.3
			3	1.0
			4	0.7
40W F40 T10	rapid start	120 or 277 V	1	2.2
			2	1.1
			3	0.8
32W F32 T8	rapid or instant start	120 or 277 V	1	2.4
			2	1.4
			3	1.0
			4	0.8

*For ballasts not specifically designed for use with dimming controls

The BEF is calculated using the formula:

BEF = Ballast Factor (in percent) / Power Input

Where Power Input = Total Wattage of Combined Lamps and Ballasts.

c. Lampholders, Starters, and Starter Holders: UL 542.

2.11.4 High-Intensity-Discharge

a. Fixture: NEMA LE 4 for ceiling compatibility of recessed fixtures and UL 1572.

b. Ballasts: ANSI C82.4 for multiple supply types and UL 1029.

2.12 LOW-VOLTAGE FUSES AND FUSEHOLDERS

2.12.1 Fuses, Low Voltage Cartridge Type

NEMA FU 1.

2.12.2 Fuses, High-Interrupting-Capacity, Current-Limiting Type

Fuses, Class G, J, L and CC shall be in accordance with UL 198C.

2.12.3 Fuses, Class K, High-Interrupting-Capacity Type

UL 198D.

2.12.4 Fuses, Class H

UL 198B.

2.12.5 Fuses, Class R

UL 198E.

2.12.6 Fuses, Class T

UL 198H.

2.12.7 Fuses for Supplementary Overcurrent Protection

UL 198G.

2.12.8 Fuses, D-C for Industrial Use

UL 198L.

2.12.9 Fuseholders

UL 512.

2.13 INSTRUMENTS, ELECTRICAL INDICATING

ANSI C39.1.

2.14 MOTORS, AC, FRACTIONAL AND INTEGRAL

Motors, ac, fractional and integral kilowatt, 373.0 kW and smaller shall conform to NEMA MG 1 and UL 1004 for motors; NEMA MG 10 for energy management selection of polyphase motors;

2.14.1 Rating

The kilowatt rating of motors should be limited to no more than 125 percent of the maximum load being served unless a NEMA standard size does not fall within this range. In this case, the next larger NEMA standard motor size should be used.

2.14.2 Motor Efficiencies

All permanently wired polyphase motors of 746 W or more shall meet the minimum full-load efficiencies as indicated in the following table, and as specified in this specification. Motors of 746 W or more with open, drip proof or totally enclosed fan cooled enclosures shall be high efficiency type, unless otherwise indicated. Motors provided as an integral part of motor driven equipment are excluded from this

requirement if a minimum seasonal or overall efficiency requirement is indicated for that equipment by the provisions of another section.

Minimum Motor Efficiencies

kW	Std. Efficiency	High Efficiency
0.746	77.0	85.5
1.12	78.5	85.5
1.49	78.5	85.5
2.24	78.5	88.5
3.73	82.5	88.5
5.60	84.0	90.0
7.46	85.5	90.0
11.2	85.5	91.0
14.9	87.5	92.0
18.7	88.5	92.0
22.4	88.5	92.0
29.8	88.5	92.0
37.3	89.0	92.5
44.8	89.0	92.5
56.9	89.0	95.5
74.6	90.0	93.5
93.3	91.0	94.5
112	91.0	94.5
149	91.0	94.5
187	91.0	94.5
224	91.0	94.5
261	91.0	94.5
298	91.0	94.5
373	91.0	94.5

2.15 MOTOR CONTROLS

2.15.1 General

NEMA ICS 1, NEMA ICS 2, NEMA ICS 3 and NEMA ICS 6, and UL 508. Panelboards supplying non-linear loads shall have neutrals sized for 200 percent of rated current.

2.15.2 Motor Starters

Combination starters shall be provided with fusible switches

2.15.3 Thermal-Overload Protection

Each motor of 93 W (1/8 hp) or larger shall be provided with thermal-overload protection. Polyphase motors shall have overload protection in each ungrounded conductor. The overload-protection device shall be provided either integral with the motor or controller, or shall be mounted in a separate enclosure. Unless otherwise specified, the protective device shall be of the manually reset type. Single or double pole tumbler switches specifically designed for alternating-current operation only may be used as manual controllers for single-phase motors having a current rating not in excess of 80 percent of the switch rating.

2.15.4 Automatic Control Devices

2.15.4.1 Direct Control

Automatic control devices (such as thermostats, float or pressure switches) which control the starting and stopping of motors directly shall be designed for that purpose and have an adequate kilowatt rating.

2.15.4.2 Pilot-Relay Control

Where the automatic-control device does not have such a rating, a magnetic starter shall be used, with the automatic-control device actuating the pilot-control circuit.

2.15.4.3 Manual/Automatic Selection

a. Where combination manual and automatic control is specified and the automatic-control device operates the motor directly, a double-throw, three-position tumbler or rotary switch (marked MANUAL-OFF-AUTOMATIC) shall be provided for the manual control.

b. Where combination manual and automatic control is specified and the automatic-control device actuates the pilot control circuit of a magnetic starter, the magnetic starter shall be provided with a three-position selector switch marked MANUAL-OFF-AUTOMATIC.

c. Connections to the selector switch shall be such that; only the normal automatic regulatory control devices will be bypassed when the switch is in the Manual position; all safety control devices, such as low-or high-pressure cutouts, high-temperature cutouts, and motor-overload protective devices, shall be connected in the motor-control circuit in both the Manual and the Automatic positions of the selector switch. Control circuit connections to any MANUAL-OFF-AUTOMATIC switch or to more than one automatic regulatory control device shall be made in accordance with wiring diagram approved by the Contracting Officer unless such diagram is included on the drawings. All controls shall be 120 volts or less unless otherwise indicated.

2.16 PANELBOARDS

Dead-front construction, NEMA PB 1 and UL 67.

2.17 RECEPTACLES

2.17.1 Heavy Duty Grade

NEMA WD 1. Devices shall conform to all requirements for heavy duty receptacles.

2.17.2 Ground Fault Interrupters

UL 943, Class A or B.

2.17.3 NEMA Standard Receptacle Configurations

NEMA WD 6.

a. Single and Duplex, 15-Ampere and 20-Ampere, 125 Volt.

15-ampere, non-locking: NEMA type 5-15R, locking: NEMA type L5-15R, 20-ampere, non-locking: NEMA type 5-20R, locking: NEMA type L5-20R.

b. 15-Ampere, 250 Volt

Two-pole, 3-wire grounding, non-locking: NEMA type 6-15R.

2.18 SERVICE ENTRANCE EQUIPMENT

UL 869A.

2.19 SPLICE, CONDUCTOR

UL 486C.

2.20 POWER-SWITCHGEAR ASSEMBLIES INCLUDING SWITCHBOARDS

Assemblies shall be metal-enclosed, freestanding general-purpose ventilated type in accordance with NEMA PB 2, UL 891, and IEEE ANSI/IEEE C37.20.1 and shall be installed to provide front access. Busses shall be copper. Assembly shall be approximately 2.3 meters high; arrangement of circuit breakers and other items specified shall be as indicated. The withstand rating and interrupting capacity of the switchboards and circuit breakers shall be based on the maximum fault current available.

2.20.1 Circuit Breakers

Circuit breakers shall be stationary molded-case circuit breakers

2.20.2 Auxiliary Equipment

2.20.2.1 Digital Circuit Monitor

Provide multi-function voltage, ampere, and watt hour meter; all in accordance with paragraph: WATT HOUR METERS.

2.21 SNAP SWITCHES

UL 20.

2.22 TAPES

2.22.1 Plastic Tape

UL 510.

2.22.2 Rubber Tape

UL 510.

2.23 WATTHOUR METERS, UTILITY REVENUE

Watthour meters shall conform to ANSI C12.1 and ANSI C12.10, except numbered terminal wiring sequence and case size may be the manufacturer's standard. Provide a 2 percent accuracy solid-state multifunction meter on the building service panelboard. Meter shall have a selectable readout display for three phase amperes, phase-to-phase and phase-to-ground volts, watts, and watthour meter. Watthour meter shall be four-wire wye, three-phase with cumulative type kilowatt demand register with 30-minute interval conforming to ANSI C12.4 and pulsed output for remote energy totalization. Meter will be connected by others to the base EMCS and shall be compatible with the existing system.

2.24 INSTRUMENT TRANSFORMERS

2.24.1 General

Instrument transformers shall comply with ANSI C12.11 and IEEE ANSI/IEEE C57.13. Instrument transformers shall be configured for mounting in/on the device to which they are applied. Polarity marks on instrument transformers shall be visually evident and shown on drawings.

2.24.2 Current Transformers

Unless otherwise indicated, bar, wound, or window-type transformers are acceptable; and except for window-type units installed over insulated buses, transformers shall have a BIL rating consistent with the rated BIL of the associated switchgear or electric power apparatus bushings, buses or conductors. Current transformers shall have the indicated ratios. The continuous thermal-current rating factor shall be not less than 1.0. Other thermal and mechanical ratings of current transformer and their primary leads shall be coordinated with the design of the circuit breaker and shall be not less than the momentary rating of the associated circuit breaker. Circuit protectors shall be provided across secondary leads of the current transformers to prevent the accidental open-circuiting of the transformers while energized. Each terminal of each current transformer shall be connected to a short-circuiting terminal block in the circuit interrupting mechanism cabinet, power transformer terminal cabinet, and in the associated instrument and relay cabinets.

2.24.2.1 Current Transformers for kWH and Demand Metering (Low Voltage)

Current transformers shall conform to IEEE ANSI/IEEE C57.13. Provide current transformers with a metering accuracy Class of 0.3 through B-0.5, with a minimum RF of 11.5 at 30 degrees C, with 600-volt insulation, and 10 kV BIL. Provide butyl-molded, window-type current transformers mounted in the current transformer cabinet.

2.24.2.2 Voltage Transformers

Voltage transformers shall have indicated ratios. Units shall have an accuracy class rating of 0.3. Voltage transformers shall be of the drawout type having current-limiting fuses in both primary and secondary circuits. Mechanical interlocks shall prevent removal of fuses, unless the associated voltage transformer is in a drawout position. Voltage transformer compartments shall have hinged doors.

2.25 WIRING DEVICES

NEMA WD 1 for wiring devices, and NEMA WD 6 for dimensional requirements of wiring devices.

2.26 EMERGENCY POWER SYSTEM

Emergency power shall be provided by an AC System capable of powering a total connected load as indicated for a period of 1-1/2 hours. Utility input supply to the system to be as indicated.

Input Voltage: 208V, 1 phase, 60 Hz
Output Voltage: 208V, 1 phase, 60 Hz
Rating: 10KW

2.26.1 Components

The system shall consist of a three-stage battery charger, a DC to AC static inverter with transfer relay, a battery bank properly sized for load requirement, a solid state, custom IC-controlled electronics system and a central display panel in accordance with the following:

(a) System Charger: The system charger shall be the temperature compensated, constant voltage type providing constant current, float and equalize charging modes. The charger shall provide ample capacity to bring the system's battery bank from fully discharged to fully charged condition within acceptable UL 924 time standards.

(b) Inverter: The inverter utilized by the system shall deliver single phase, sinusoidal emergency power free from high voltage surges or frequency drift. Inverter start up and shut down shall be accomplished by means of a highly reliable electro-mechanical relay capable of transferring 100 percent of the system's rated capacity to the connected emergency load within one second of utility failure. Inverter output regulation shall be held to +10 percent -5 percent variance from nominal. Output frequency tolerance shall be ±2 percent. Full load harmonic distortion shall not exceed 10 percent. Inverter switching shall allow for the connection of normally-on, normally-off, or combination normally-on/normally-off, loads. Both charger and inverter assemblies shall employ fail-safe design and provide complete protection against thermal and current overloads. Inverter and charger operating efficiency shall not be less than 85 percent.

(c) Batteries: Emergency power source shall be provided by sealed maintenance-free lead-calcium recombination batteries with 10-year expected life.

(d) Solid State Electronics System: An IC-controlled, solid state electronics system shall continuously monitor entire unit operation. A digital display on the unit's central display panel shall allow direct readout of AC output voltage, charger current and DC input voltage. Circuitry shall be programmed to initiate and carry out a 5 minute discharge test every 28 ±2 days and a 30 minute discharge test every 180 days ±6 days designed to exercise the system's batteries. During programmed discharge cycles, self-diagnostic circuits shall monitor emergency performance to programmed parameters. In the event of malfunction condition, an audio-visual alarm will be provided on the central display panel, indicating the type and area of failure. Alarms shall be provided under the following conditions: high/low battery

voltage, open output circuit breaker, low battery capacity, transfer circuit failure, inverter failure or thermal overload.

(e) System Protection: Automatic system protection circuits shall include a low voltage battery disconnect, a brownout protection circuit and a 15 minute time delay in retransfer to standby operation.

(f) Test Switch: A test switch shall be provided on the central display panel which will allow a manual 5 minute discharge/diagnostic test of the system at any time.

(g) Transfer Mechanism: Mechanism shall utilize electromechanical transfer relays.

(h) Miscellaneous Equipment: The following equipment shall be provided with the system:

AC Output Current Display
AC Input Current Display
Integral Circuit breaker panel with 2-20A, 2 pole breakers and 6-20A, 1 pole breakers

3 PART 3 EXECUTION

3.1 GROUNDING

Grounding shall be in conformance with NFPA 70, the contract drawings, and the following specifications.

3.1.1 Ground Rods

The resistance to ground shall be measured using the fall-of-potential method described in IEEE Std 81. The maximum resistance of a driven ground shall not exceed 25 ohms under normally dry conditions. If this resistance cannot be obtained with a single rod, 3 additional rods not less than 1.8 meters on centers, or if sectional type rods are used, 2 additional sections may be coupled and driven with the first rod. In high-ground-resistance, UL listed chemically charged ground rods may be used. If the resultant resistance exceeds 25 ohms measured not less than 48 hours after rainfall, the Contracting Officer shall be notified immediately. Connections below grade shall be fusion welded. Connections above grade shall be fusion welded or shall use UL 467 approved connectors.

3.1.2 Grounding Conductors

A green equipment grounding conductor, sized in accordance with NFPA 70 shall be provided, regardless of the type of conduit. Equipment grounding bars shall be provided in all panelboards. The equipment grounding conductor shall be carried back to the service entrance grounding connection or separately derived grounding connection. All equipment grounding conductors, including metallic raceway systems used as such, shall be bonded or joined together in each wiring box or equipment enclosure. Metallic raceways and grounding conductors shall be checked to assure that they are wired or bonded into a common junction. Metallic boxes and enclosures, if used, shall also be bonded to these grounding conductors by an approved means per NFPA 70. When boxes for receptacles, switches, or other utilization devices are installed, any designated grounding terminal on these devices shall also be bonded to the equipment grounding conductor junction with a short jumper.

3.2 WIRING METHODS

Wiring shall conform to NFPA 70, the contract drawings, and the following specifications. Unless otherwise indicated, wiring shall consist of insulated conductors installed inrigid zinc-coated steel conduit, electrical metallic tubing, and intermediate metal conduit. Where cables and wires are installed in cable trays, they shall be of the type permitted by NFPA 70 for use in such applications. Wire fill in conduits shall be based on NFPA 70 for the type of conduit and wire insulations specified.

3.2.1 Conduit and Tubing Systems

Conduit and tubing systems shall be installed as indicated. Conduit sizes shown are based on use of copper conductors with insulation types as described in paragraph WIRING METHODS. Minimum size of raceways shall be 15 mm. Only metal conduits will be permitted when conduits are required for shielding or other special purposes indicated, or when required by conformance to NFPA 70. Nonmetallic conduit and tubing may be used in damp, wet or corrosive locations when permitted by NFPA 70 and the conduit or tubing system is provided with appropriate boxes, covers, clamps, screws or other appropriate type of fittings. Electrical metallic tubing (EMT) may be installed only within buildings. EMT may be installed in concrete and grout in dry locations. EMT installed in concrete or grout shall be provided with concrete tight fittings. EMT shall not be installed in damp or wet locations, or the air space of exterior masonry cavity walls. Bushings, manufactured fittings or boxes providing equivalent means of protection shall be installed on the ends of all conduits and shall be of the insulating type, where required by NFPA 70. Only UL listed adapters shall be used to connect EMT to rigid metal conduit, cast boxes, and conduit bodies. Penetrations of above grade floor slabs, time-rated partitions and fire walls shall be firestopped in accordance with Section 07270 FIRESTOPPING. Except as otherwise specified, IMC may be used as an option for rigid steel conduit in areas as permitted by NFPA 70. Raceways shall not be installed under the firepits of boilers and furnaces and shall be kept 150 mm away from parallel runs of flues, steam pipes and hot-water pipes. Raceways shall be concealed within finished walls, ceilings, and floors unless otherwise shown. Raceways crossing structural expansion joints or seismic joints shall be provided with suitable expansion fittings or other suitable means to compensate for the building expansion and contraction and to provide for continuity of grounding. Wiring installed in underfloor raceway system shall be suitable for installation in wet locations.

3.2.1.1 Pull Wires

A pull wire shall be inserted in each empty raceway in which wiring is to be installed if the raceway is more than 15 meters in length and contains more than the equivalent of two 90-degree bends, or where the raceway is more than 45 meters in length. The pull wire shall be of No. 14 AWG zinc-coated steel, or of plastic having not less than 1.4 MPa (200 psi) tensile strength. Not less than 254 mm of slack shall be left at each end of the pull wire.

3.2.1.2 Conduit Stub-Ups

Where conduits are to be stubbed up through concrete floors, a short elbow shall be installed below grade to transition from the horizontal run of conduit to a vertical run. A conduit coupling fitting, threaded on the inside shall be installed, to allow terminating the conduit flush with the finished floor. Wiring shall be extended in rigid threaded conduit to equipment, except that where required, flexible conduit may be used 150 mm above the floor. Empty or spare conduit stub-ups shall be plugged flush with the finished floor with a threaded, recessed plug.

3.2.1.3 Below Slab-on-Grade or in the Ground

Electrical wiring below slab-on-grade shall be protected by a conduit system. Conduit passing vertically through slabs-on-grade shall be rigid steel or IMC. Rigid steel or IMC conduits installed below slab-on-grade or in the earth shall be field wrapped with 0.254 mm thick pipe-wrapping plastic tape applied with a 50 percent overlay, or shall have a factory-applied polyvinyl chloride, plastic resin, or epoxy coating system.

3.2.1.4 Installing in Slabs Including Slabs on Grade

Conduit installed in slabs-on-grade shall be rigid steel or IMC. Conduits shall be installed as close to the middle of concrete slabs as practicable without disturbing the reinforcement. Outside diameter shall not exceed 1/3 of the slab thickness and conduits shall be spaced not closer than 3 diameters on centers except at cabinet locations where the slab thickness shall be increased as approved by the Contracting Officer. Where conduit is run parallel to reinforcing steel, the conduit shall be spaced a minimum of one conduit diameter away but not less than 25.4 mm from the reinforcing steel.

3.2.1.5 Changes in Direction of Runs

Changes in direction of runs shall be made with symmetrical bends or cast-metal fittings. Field-made bends and offsets shall be made with an approved hickey or conduit-bending machine. Crushed or deformed raceways shall not be installed. Trapped raceways in damp and wet locations shall be avoided where possible. Lodgment of plaster, dirt, or trash in raceways, boxes, fittings and equipment shall be prevented during the course of construction. Clogged raceways shall be cleared of obstructions or shall be replaced.

3.2.1.6 Supports

Metallic conduits and tubing and the support system to which they are attached, shall be securely and rigidly fastened in place to prevent vertical and horizontal movement at intervals of not more than 3 meters and within 900 mm of boxes, cabinets, and fittings, with approved pipe straps, wall brackets, conduit clamps, conduit hangers, threaded C-clamps, beam clamps, or ceiling trapeze. Loads and supports shall be coordinated with supporting structure to prevent damage or deformation to the structure. Loads shall not be applied to joist bridging. Attachment shall be by wood screws or screw-type nails to wood; by toggle bolts on hollow masonry units; by expansion bolts on concrete or brick; by machine screws, welded threaded studs, heat-treated or spring-steel-tension clamps on steel work. Nail-type nylon anchors or threaded studs driven in by a powder charge and provided with lock washers and nuts may be used in lieu of expansion bolts or machine screws. Raceways or pipe straps shall not be welded to steel structures. Cutting the main reinforcing bars in reinforced concrete beams or joists shall be avoided when drilling holes for support anchors. Holes drilled for support anchors, but not used, shall be filled. In partitions of light steel construction, sheet-metal screws may be used. Raceways shall not be supported using wire or nylon ties. Raceways shall be independently supported from the structure. Upper raceways shall not be used as a means of support for lower raceways. Supporting means shall not be shared between electrical raceways and mechanical piping or ducts. Cables and raceways shall not be supported by ceiling grids. Except where permitted by NFPA 70, wiring shall not be supported by ceiling support systems. Conduits shall be fastened to sheet-metal boxes and cabinets with two lock nuts where required by NFPA 70, where insulating bushings are used, and where bushings cannot be brought into firm contact with the box; otherwise, a single lock nut and bushing may be used. Threadless fittings for electrical metallic tubing shall be of a type approved for the conditions

encountered. Additional support for horizontal runs is not required when EMT rests on steel stud cutouts.

3.2.1.7 Exposed Raceways

Exposed raceways shall be installed parallel or perpendicular to walls, structural members, or intersections of vertical planes and ceilings. Raceways under raised floors and above accessible ceilings shall be considered as exposed installations in accordance with NFPA 70 definitions.

3.2.1.8 Communications Raceways

Communications raceways indicated shall be installed in accordance with the previous requirements for conduit and tubing and with the additional requirement that no length of run shall exceed 15 meters for 15 mm and 20 mm sizes, and 30 meters for 25 mm or larger sizes, and shall not contain more than two 90-degree bends or the equivalent. Additional pull or junction boxes shall be installed to comply with these limitations whether or not indicated. Inside radii of bends in conduits of 25 mm (1 inch) size or larger shall not be less than ten times the nominal diameter.

3.2.2 Cables and Conductors

Installation shall conform to the requirements of NFPA 70. Covered, bare or insulated conductors of circuits rated over 600 volts shall not occupy the same equipment wiring enclosure, cable, or raceway with conductors of circuits rated 600 volts or less.

3.2.2.1 Sizing

Unless otherwise noted, all sizes are based on copper conductors and the insulation types indicated. Sizes shall be not less than indicated. Branch-circuit conductors shall be not smaller than No. 12 AWG. Conductors for branch circuits of 120 volts more than 30 meters long and of 277 volts more than 70 meters long, from panel to load center, shall be no smaller than No. 10 AWG. Class 1 remote control and signal circuit conductors shall be not less than No. 14 AWG. Class 2 remote control and signal circuit conductors shall be not less than No. 16 AWG. Class 3 low-energy, remote-control and signal circuits shall be not less than No. 22 AWG.

3.2.2.2 Use of Aluminum Conductors in Lieu of Copper

Aluminum conductors shall not be used

3.2.2.3 Cable Splicing

Splices shall be made in an accessible location. Crimping tools and dies shall be approved by the connector manufacturer for use with the type of connector and conductor.

a. Copper Conductors, 600 Volt and Under: Splices in conductors No. 10 AWG and smaller diameter shall be made with an insulated, pressure-type connector. Splices in conductors No. 8 AWG and larger diameter shall be made with a solderless connector and insulated with tape or heat-shrink type insulating material equivalent to the conductor insulation.

3.2.2.4 Conductor Identification and Tagging

Power, control, and signal circuit conductor identification shall be provided within each enclosure where a tap, splice, or termination is made. Where several feeders pass through a common pull box, the feeders shall be tagged to indicate clearly the electrical characteristics, circuit number, and panel designation. Phase conductors of low voltage power circuits shall be identified by color coding. Phase identification by a particular color shall be maintained continuously for the length of a circuit, including junctions.

a. Color coding shall be provided for service, feeder, branch, and ground conductors. Color shall be green for grounding conductors and white for neutrals; except where neutrals of more than one system are installed in the same raceway or box, other neutral shall be white with colored (not green) stripe. The color coding for 3-phase and single-phase low voltage systems shall be as follows:

   120/208-volt, 3-phase: Black(A), red(B), and blue(C).

b. Conductor phase and voltage identification shall be made by color-coded insulation for all conductors smaller than No. 6 AWG. For conductors No. 6 AWG and larger, identification shall be made by color-coded insulation, or conductors with black insulation may be furnished and identified by the use of half-lapped bands of colored electrical tape wrapped around the insulation for a minimum of 75 mm of length near the end, or other method as submitted by the Contractor and approved by the Contracting Officer.

c. Control and signal circuit conductor identification shall be made by color-coded insulated conductors, plastic-coated self-sticking printed markers, permanently attached stamped metal foil markers, or equivalent means as approved. Control circuit terminals of equipment shall be properly identified. Terminal and conductor identification shall match that shown on approved detail drawings. Hand lettering or marking is not acceptable.

3.3 BOXES AND SUPPORTS

Boxes shall be provided in the wiring or raceway systems where required by NFPA 70 for pulling of wires, making connections, and mounting of devices or fixtures. Pull boxes shall be furnished with screw-fastened covers. Indicated elevations are approximate, except where minimum mounting heights for hazardous areas are required by NFPA 70. Unless otherwise indicated, boxes for wall switches shall be mounted 1.2 meters above finished floors. Switch and outlet boxes located on opposite sides of fire rated walls shall be separated by a minimum horizontal distance of 600 mm. The total combined area of all box openings in fire rated walls shall not exceed 0.0645 square meters per 9.3 square meters. Maximum box areas for individual boxes in fire rated walls vary with the manufacturer and shall not exceed the maximum specified for that box in UL Elec Const Dir. Only boxes listed in UL Elec Const Dir shall be used in fire rated walls.

3.3.1 Box Applications

Each box shall have not less than the volume required by NFPA 70 for number of conductors enclosed in box. Boxes for metallic raceways, 102 by 102 mm nominal size and smaller, shall be of the cast-metal hub type when located in normally wet locations, when flush and surface mounted on outside of exterior surfaces, or when located in hazardous areas. Cast-metal boxes installed in wet locations and boxes

installed flush with the outside of exterior surfaces shall be gasketed. Boxes for mounting lighting fixtures shall be not less than 102 mm square, or octagonal, except smaller boxes may be installed as required by fixture configuration, as approved. Cast-metal boxes with 2.4 mm wall thickness are acceptable. Large size boxes shall be NEMA 1 or as shown. Boxes in other locations shall be sheet steel except that aluminum boxes may be used with aluminum conduit, and nonmetallic boxes may be used with nonmetallic conduit and tubing or nonmetallic sheathed cable system, when permitted by NFPA 70. Boxes for use in masonry-block or tile walls shall be square-cornered, tile-type, or standard boxes having square-cornered, tile-type covers.

3.3.2 Brackets and Fasteners

Boxes and supports shall be fastened to wood with wood screws or screw-type nails of equal holding strength, with bolts and metal expansion shields on concrete or brick, with toggle bolts on hollow masonry units, and with machine screw or welded studs on steel work. Threaded studs driven in by powder charge and provided with lock washers and nuts, or nail-type nylon anchors may be used in lieu of expansion shields, or machine screws. Penetration of more than 38.1 mm (1-1/2 inches) into reinforced-concrete beams or more than 19.1 mm (3/4 inch) into reinforced-concrete joists shall avoid cutting any main reinforcing steel. The use of brackets which depend on gypsum wallboard or plasterboard for primary support will not be permitted. In partitions of light steel construction, bar hangers with 25 mm long studs, mounted between metal wall studs or metal box mounting brackets shall be used to secure boxes to the building structure. When metal box mounting brackets are used, additional box support shall be provided on the side of the box opposite the brackets. This additional box support shall consist of a minimum 300 mm long section of wall stud, bracketed to the opposite side of the box and secured by two screws through the wallboard on each side of the stud. Metal screws may be used in lieu of the metal box mounting brackets.

3.3.3 Mounting in Walls, Ceilings, or Recessed Locations

In walls or ceilings of concrete, tile, or other non-combustible material, boxes shall be installed so that the edge of the box is not recessed more than 6 mm from the finished surface. Boxes mounted in combustible walls or ceiling material shall be mounted flush with the finished surface. The use of gypsum or plasterboard as a means of supporting boxes will not be permitted. Boxes installed for concealed wiring shall be provided with suitable extension rings or plaster covers, as required. The bottom of boxes installed in masonry-block walls for concealed wiring shall be mounted flush with the top of a block to minimize cutting of the blocks, and boxes shall be located horizontally to avoid cutting webs of block. Separate boxes shall be provided for flush or recessed fixtures when required by the fixture terminal operating temperature, and fixtures shall be readily removable for access to the boxes unless ceiling access panels are provided.

3.3.4 Installation in Overhead Spaces

In open overhead spaces, cast-metal boxes threaded to raceways need not be separately supported except where used for fixture support; cast-metal boxes having threadless connectors and sheet metal boxes shall be supported directly from the building structure or by bar hangers. Hangers shall not be fastened to or supported from joist bridging. Where bar hangers are used, the bar shall be attached to raceways on opposite sides of the box and the raceway shall be supported with an approved type fastener not more than 600 mm from the box.

3.4 DEVICE PLATES

One-piece type device plates shall be provided for all outlets and fittings. Plates on unfinished walls and on fittings shall be of zinc-coated sheet steel, cast-metal, or impact resistant plastic having rounded or beveled edges. Plates on finished walls shall be of steel with baked enamel finish or impact-resistant plastic and shall be ivory. Screws shall be of metal with countersunk heads, in a color to match the finish of the plate. Plates shall be installed with all four edges in continuous contact with finished wall surfaces without the use of mats or similar devices. Plaster fillings will not be permitted. Plates shall be installed with an alignment tolerance of 1.6 mm. The use of sectional-type device plates will not be permitted. Plates installed in wet locations shall be gasketed and provided with a hinged, gasketed cover, unless otherwise specified.

3.5 RECEPTACLES

3.5.1 Single and Duplex, 15 or 20-ampere, 125 volt

Single and duplex receptacles shall be rated 20 amperes, 125 volts, two-pole, three-wire, grounding type with polarized parallel slots. Bodies shall be of ivory to match color of switch handles in the same room or to harmonize with the color of the respective wall, and supported by mounting strap having plaster ears. Contact arrangement shall be such that contact is made on two sides of an inserted blade. Receptacle shall be side- or back-wired with two screws per terminal. The third grounding pole shall be connected to the metal mounting yoke. Switched receptacles shall be the same as other receptacles specified except that the ungrounded pole of each suitable receptacle shall be provided with a separate terminal. Only the top receptacle of a duplex receptacle shall be wired for switching application. Receptacles with ground fault circuit interrupters shall have the current rating as indicated, and shall be UL Class A type unless otherwise shown. Ground fault circuit protection shall be provided as required by NFPA 70 and as indicated on the drawings.

3.5.2 Clock Outlet

Clock outlet, for use in other than a wired clock system, shall consist of an outlet box, a plaster cover where required, and a single receptacle with clock-outlet plate. The receptacle shall be recessed sufficiently within the box to allow the complete insertion of a standard cap, flush with the plate. A suitable clip or support for hanging the clock shall be secured to the top of the plate. Material and finish of the plate shall be as specified in paragraph DEVICE PLATES.

3.5.3 Floor Outlets

Floor outlets shall be adjustable and each outlet box shall be three-gang, rectangular, and consist of a cast-metal body with a gray polyester corrosion resistant finish, threaded openings for conduits, adjustable ring, and brushed brass cover plate with 15 mm or 20 mm threaded flush plug. Each outlet shall accept standard receptacles as indicated on the drawings and a single data jack. Gaskets shall be used where necessary to ensure a watertight installation. Plugs with installation instructions shall be delivered to the Contracting Officer at the job site for capping outlets upon removal of service fittings.

3.5.4 Weatherproof Applications

Weatherproof receptacles shall be suitable for the environment, damp or wet as applicable, and the housings shall be labeled to identify the allowable use. Receptacles shall be marked in accordance with

UL 514A for the type of use indicated; "Damp locations", "Wet Locations", "Wet Location Only When Cover Closed". Assemblies shall be installed in accordance with the manufacturer's recommendations.

3.5.4.1 Damp Locations

Receptacles in damp locations shall be mounted in an outlet box with a gasketed, weatherproof, cast-metal cover plate (device plate, box cover) and a gasketed cap (hood, receptacle cover) over each receptacle opening. The cap shall be either a screw-on type permanently attached to the cover plate by a short length of bead chain or shall be a flap type attached to the cover with a spring loaded hinge.

3.5.4.2 Wet Locations

Receptacles in wet locations shall be installed in an assembly rated for such use whether the plug is inserted or withdrawn, unless otherwise indicated. In a duplex installation, the receptacle cover shall be configured to shield the connections whether one or both receptacles are in use.

3.5.5 Receptacles, 15-Ampere, 250-Volt

3.5.5 Receptacles, 15-ampere, 250-volt, shall be single, two-pole, three-wire, grounding type with bodies of ivory phenolic compound supported by mounting yoke having plaster ears. The third grounding pole shall be connected to the metal yoke. Each receptacle shall be provided with a mating cord-grip plug.

3.5.6 Special-Purpose or Heavy-Duty Receptacles

Special-purpose or heavy-duty receptacles shall be of the type and of ratings and number of poles required for the anticipated purpose. Contact surfaces may be either round or rectangular. One appropriate straight or angle-type plug shall be furnished with each receptacle. Locking type receptacles, rated 30 amperes or less, shall be locked by rotating the plug. Locking type receptacles, rated more than 50 amperes, shall utilize a locking ring.

3.6 WALL SWITCHES

Wall switches shall be of the totally enclosed tumbler type. The wall switch handle and switch plate color shall be ivory. Wiring terminals shall be of the screw type or of the solderless pressure type having suitable conductor-release arrangement. Not more than one switch shall be installed in a single-gang position. Switches shall be rated 20-ampere 120-volt for use on alternating current only. Pilot lights indicated shall consist of yoke-mounted candelabra-base sockets rated at 75 watts, 125 volts, and fitted with glass or plastic jewels. A clear 6-watt lamp shall be furnished and installed in each pilot switch. Jewels for use with switches controlling motors shall be green, and jewels for other purposes shall be red. Dimming switches shall be solid-state flush mounted, sized for the loads.

3.7 SERVICE EQUIPMENT

Service-disconnecting means shall be of the type indicated with an external handle for manual operation. When service disconnecting means is a part of an assembly, the assembly shall be listed as suitable for service entrance equipment. Enclosures shall be sheet metal with hinged cover for surface mounting unless otherwise indicated.

3.8 PANELBOARDS

Circuit breakers and switches used as a motor disconnecting means shall be capable of being locked in the open position. Door locks shall be keyed alike. Nameplates shall be as approved. Directories shall be typed to indicate loads served by each circuit and mounted in a holder behind a clear protective covering. Busses shall be copper.

3.8.1 Panelboards

Panelboards shall be bolt-on circuit breaker equipped. A separate neutral and ground bus shall be provided.

3.9 FUSES

Equipment provided under this contract shall be provided with a complete set of properly rated fuses when the equipment manufacturer utilize fuses in the manufacture of the equipment, or if current-limiting fuses are required to be installed to limit the ampere-interrupting capacity of circuit breakers or equipment to less than the maximum available fault current at the location of the equipment to be installed. Fuses shall have a voltage rating of not less than the phase-to-phase circuit voltage, and shall have the time-current characteristics required for effective power system coordination. Time-delay and non-time-delay options shall be as specified.

3.9.1 Cartridge Fuses; Noncurrent-Limiting Type

Cartridge fuses of the noncurrent-limiting type shall be Class H, nonrenewable, dual element, time lag type and shall have interrupting capacity of 10,000 amperes. At 500 percent current, cartridge fuses shall not blow in less than 10 seconds.

3.9.2 Cartridge Fuses; Current-Limiting Type

Cartridge fuses, current-limiting type, Class RK1 and RK5 shall have tested interrupting capacity not less than 100,000 amperes. Fuse holders shall be the type that will reject all Class H fuses.

3.9.3 Motor and Transformer Circuit Fuses

Motor, motor controller, transformer, and inductive circuit fuses shall be Class RK1 or RK5, current-limiting, time-delay with 200,000 amperes interrupting capacity.

3.10 UNDERGROUND SERVICE

Unless otherwise indicated, interior conduit systems shall be stubbed out 1.5 m beyond the building wall and 600 mm below finished grade, for interface with the exterior service lateral conduits and exterior communications conduits. Outside conduit ends shall be bushed when used for direct burial service lateral conductors. Outside conduit ends shall be capped or plugged until connected to exterior conduit systems. Underground service lateral conductors will be extended to building service entrance and terminated in accordance with the requirements of Section 16375 ELECTRICAL DISTRIBUTION SYSTEM, UNDERGROUND and NFPA 70.

3.11 MOTORS

Each motor shall conform to the kW and voltage ratings indicated, and shall have a service factor and other characteristics that are essential to the proper application and performance of the motors under conditions shown or specified. Three-phase motors for use on 3-phase 208-volt systems shall have a nameplate rating of 200 volts. Unless otherwise specified, all motors shall have open frames, and continuous-duty classification based on a 40 degree C ambient temperature reference. Polyphase motors shall be squirrel-cage type, having normal-starting-torque and low-starting-current characteristics, unless other characteristics are specified in other sections of these specifications or shown on contract drawings. The Contractor shall be responsible for selecting the actual kilowatt (horsepower) ratings and other motor requirements necessary for the applications indicated. When electrically driven equipment furnished under other sections of these specifications materially differs from the design, the Contractor shall make the necessary adjustments to the wiring, disconnect devices and branch-circuit protection to accommodate the equipment actually installed.

3.12 MOTOR CONTROL

Each motor or group of motors requiring a single control and not controlled from a motor-control center shall be provided under other sections of these specifications with a suitable controller and devices that will perform the functions as specified for the respective motors. Each motor of 93 W (1/8 hp) or larger shall be provided with thermal-overload protection. Polyphase motors shall have overload protection in each ungrounded conductor. The overload-protection device shall be provided either integral with the motor or controller, or shall be mounted in a separate enclosure. Unless otherwise specified, the protective device shall be of the manually reset type. Single or double pole tumbler switches specifically designed for alternating-current operation only may be used as manual controllers for single-phase motors having a current rating not in excess of 80 percent of the switch rating. Automatic control devices such as thermostats, float or pressure switches may control the starting and stopping of motors directly, provided the devices used are designed for that purpose and have an adequate kilowatt rating. When the automatic-control device does not have such a rating, a magnetic starter shall be used, with the automatic-control device actuating the pilot-control circuit. When combination manual and automatic control is specified and the automatic-control device operates the motor directly, a double-throw, three-position tumbler or rotary switch shall be provided for the manual control; when the automatic-control device actuates the pilot control circuit of a magnetic starter, the latter shall be provided with a three-position selector switch marked MANUAL-OFF-AUTOMATIC. Connections to the selector switch shall be such that only the normal automatic regulatory control devices will be bypassed when the switch is in the Manual position; all safety control devices, such as low- or high-pressure cutouts, high-temperature cutouts, and motor-overload protective devices, shall be connected in the motor-control circuit in both the Manual and the Automatic positions of the selector switch. Control circuit connections to any MANUAL-OFF-AUTOMATIC switch or to more than one automatic regulatory control device shall be made in accordance with wiring diagram approved by the Contracting Officer unless such diagram is included on the drawings. All controls shall be 120 volts or less unless otherwise indicated.

3.12.1 Contacts

Unless otherwise indicated, contacts in miscellaneous control devices such as float switches, pressure switches, and auxiliary relays shall have current and voltage ratings in accordance with NEMA ICS 2 for rating designation B300.

3.12.2 Safety Controls

Safety controls for boilers shall be connected to a 2-wire, 120 volt grounded circuit supplied from the associated boiler-equipment circuit. Where the boiler circuit is more than 120 volts to ground, safety controls shall be energized through a two-winding transformer having its 120 volt secondary winding grounded. Overcurrent protection shall be provided in the ungrounded secondary conductor and shall be sized for the load encountered.

3.13 MOTOR-DISCONNECT MEANS

Each motor shall be provided with a disconnecting means when required by NFPA 70 even though not indicated. For single-phase motors, a single or double pole toggle switch, rated only for alternating current, will be acceptable for capacities less than 30 amperes, provided the ampere rating of the switch is at least 125 percent of the motor rating. Switches shall disconnect all ungrounded conductors.

3.14 LAMPS AND LIGHTING FIXTURES

Ballasted fixtures shall have ballasts which are compatible with the specific type and rating of lamps indicated and shall comply with the applicable provisions of the publications referenced.

3.14.1 Lamps

Lamps of the type, wattage, and voltage rating indicated shall be delivered to the project in the original cartons and installed in the fixtures just prior to the completion of the project.

3.14.1.1 Incandescent

Incandescent lamps shall be for 125-volt operation unless otherwise indicated.

3.14.1.2 Fluorescent

Fluorescent lamps for magnetic ballasts shall be as indicated and shall be of a type that will not require starter switches. Lamps shall be of the rapid-start type unless otherwise shown or approved. Fluorescent lamps for electronic ballasts shall be as indicated.

3.14.1.3 High-Intensity-Discharge

High-intensity-discharge lamps shall be the high-pressure sodium type unless otherwise indicated, shown, or approved.

3.14.2 Fixtures

Fixtures shall be as shown on the drawings and shall conform to the following specifications. Illustrations shown on these sheets are indicative of the general type desired and are not intended to restrict selection to fixtures of any particular manufacturer. Fixtures of similar designs and equivalent energy efficiency, light distribution and brightness characteristics, and of equal finish and quality will be acceptable if approved. In suspended acoustical ceilings with fluorescent fixtures, the fluorescent emergency light fixtures shall be furnished with self-contained battery packs.

3.14.2.1 Accessories

Accessories such as straps, mounting plates, nipples, or brackets shall be provided for proper installation. Open type fluorescent fixtures with exposed lamps shall have a wire-basket type guard.

3.14.2.2 Suspended Fixtures

Suspended fixtures shall be provided with swivel hangers in order to ensure a plumb installation. Pendants, rods, or chains 1.2 meters or longer excluding fixture, shall be braced to limit swinging. Bracing shall be 3 directional, 120 degrees apart. Single unit suspended fluorescent fixtures shall have twin-stem hangers. Multiple unit or continuous-row fluorescent units shall have a tubing or stem for wiring at one point, and a tubing or rod suspension provided for each length of chassis including one at each end. Maximum distance between adjacent tubing or stems shall be 3.1 meters. Rods shall be of not less than 4.8 mm (3/16 inch) diameter. Flexible raceway shall be installed to each fixture from an overhead junction box. Fixture to fixture wiring installation is allowed only when fixtures are installed end to end in a continuous run.

3.14.2.3 Ceiling Fixtures

Ceiling fixtures shall be coordinated with and suitable for installation in, on, or from the suspended ceiling provided under other sections of these specifications. Installation and support of fixtures shall be in accordance with the NFPA 70 and manufacturer's recommendations. Recessed fixtures shall have adjustable fittings to permit alignment with ceiling panels. Recessed fixtures installed in fire-resistive type of suspended ceiling construction shall have the same fire rating as the ceiling or shall be provided with fireproofing boxes having materials of the same fire rating as the ceiling panels, in conformance with UL Elec Const Dir. Surface-mounted fixtures shall be suitable for fastening to the structural support for ceiling panels.

3.14.2.4 Sockets

Sockets of industrial, strip, and other open type fluorescent fixtures shall be of the type requiring a forced movement along the longitudinal axis of the lamp for insertion and removal of the lamp.

3.14.3 Emergency Lighting

Emergency lighting system shall conform to UL 924 and shall supply all types of lighting systems within the building.

3.14.4 Programmable Lighting Control Systems

Where indicated, Luminaries in Weight/Exercise Room, Lobby/Vestibule and corridors shall be group controlled by a programmable control system. System shall include lighting control relays, micro-processor based programmable controller, switches and other control devices ~~indicated or~~ as required. General arrangement and control shall be as indicated and specified.

3.14.4.1 Equipment

a. Lighting Relays. Relays shall be rated 20 ampere, for control of 120V circuits. When required, relays shall have auxiliary contacts for status feed back or pilot light indicator. Each relay may be either a combination class 2 transformer and magnetic latching relay or split coil latching relay powered from a central transformer.

b. Controller. Each controller shall be equipped with a control transformer, CPU board, I/O board(s), and either an on board programming keyboard or a port for attachment of a portable programming device, which shall be provided. Each I/O board shall contain programmable inputs and outputs. The controller shall have a high voltage section housing the line connections for the lighting relays and control transformer. Lighting relays shall be remote mountable (up to 2000 feet with 18 AWG wire) from the controller and wired to available outputs on the controller.

c. Accessories. Control cabinet ~~shall be a NEMA 12~~, with pilot lights, hand-off-auto switches, and other accessories as ~~indicated~~ required shall be located at the Issue Desk.

3.14.4.2 Operation

System shall be programmed to control the lighting output of selected fixtures as required to illuminate the gymnasium for the scheduled events.

3.14.5 Gymnasium Lighting Control System

Lighting within the gymnasium shall be divided into four (4) zones: each court shall be a separate zone and each court perimeter shall be a separate zone. Control switches for each zone shall be located at the Issue Desk.

3.14.5.1 Equipment

Components shall be UL listed and shall be warranted for a period of no less than five (5) years from the date of shipment. All high/low devices shall be provided with surge protection.

a. Control Signal Carrier: All luminaries shall be controlled by a power line carrier signal system that operates at a high frequency of 120 Khertz with no adverse effects on harmonic distortion. Hardwired systems requiring a separate control wire or fiber cable shall not be permitted. A signal jumper to allow the high frequency signal to travel across multiple circuits shall connect all circuits. Each signal jumper can be used with a maximum of five (5) circuits before another jumper is required.

b. Receiver: All luminaries shall be supplied with a high/low system receiver module to receive the power line carrier signal. Each module is addressable with up to 1000 different addresses for use with

multiple control devices. Multiple modules may be set to the same address for control by one or more control devices. Each receiver can be switched manually for testing individual luminaries.

c. Transmitter: All luminaries shall be controlled by a general-purpose transmitter or a manual override device that can be set with one of the 1000 signal addresses.

3.14.5.2 Operation

All metal halide high bay luminaries within each zone shall be controlled by a high/low system to provide two levels of light output and energy consumption. When the lighting system is operating in the low mode, it will provide a lighting level of 380 lux per zone. When switched to high, the system will provide 95 percent of full light output instantly and 100 percent (1060 lux per zone) within a two-minute period. Each time the lighting system is energized, all fixtures will be brought up to full output for a period of eight (8) minutes regardless of operating mode to stabilize the lamps and ensure full lamp life. Then the system switches the luminaries to the proper high or low status automatically.

3.15 BATTERY CHARGERS

NOT USED

3.16 EQUIPMENT CONNECTIONS

Wiring not furnished and installed under other sections of the specifications for the connection of electrical equipment as indicated on the drawings shall be furnished and installed under this section of the specifications. Connections shall comply with the applicable requirements of paragraph WIRING METHODS. Flexible conduits 2 m or less in length shall be provided to all electrical equipment subject to periodic removal, vibration, or movement and for all motors. All motors shall be provided with separate grounding conductors. Liquid-tight conduits shall be used in damp or wet locations.

3.16.1 Motors and Motor Control

Motors, motor controls, and motor control centers shall be installed in accordance with NFPA 70, the manufacturer's recommendations, and as indicated. Wiring shall be extended to motors, motor controls, and motor control centers and terminated.

3.16.2 Scoreboards

See Specification Section 11480 - ATHLETIC EQUIPMENT.

3.16.3 Basketball Backboards

See Specification Section 11480 - ATHLETIC EQUIPMENT.

3.16.4 Telescoping Seating

Seating shall operate on 208 Vac, 3 phase, 60 hertz. See Specification Section 12660 - ELECTRICALLY OPERATED TELESCOPIC SEATING.

3.17 CIRCUIT PROTECTIVE DEVICES

The Contractor shall calibrate, adjust, set and test each new adjustable circuit protective device to ensure that they will function properly prior to the initial energization of the new power system under actual operating conditions.

3.18 PAINTING AND FINISHING

Field-applied paint on exposed surfaces shall be provided under Section 09900 PAINTING, GENERAL.

3.19 REPAIR OF EXISTING WORK

The work shall be carefully laid out in advance, and where cutting, channeling, chasing, or drilling of floors, walls, partitions, ceiling, or other surfaces is necessary for the proper installation, support, or anchorage of the conduit, raceways, or other electrical work, this work shall be carefully done, and any damage to building, piping, or equipment shall be repaired by skilled mechanics of the trades involved at no additional cost to the Government.

3.20 FIELD TESTING

Field testing shall be performed in the presence of the Contracting Officer. The Contractor shall notify the Contracting Officer 7 days prior to conducting tests. The Contractor shall furnish all materials, labor, and equipment necessary to conduct field tests. The Contractor shall perform all tests and inspection recommended by the manufacturer unless specifically waived by the Contracting Officer. The Contractor shall maintain a written record of all tests which includes date, test performed, personnel involved, devices tested, serial number and name of test equipment, and test results. All field test reports will be signed and dated by the Contractor.

3.20.1 Safety

The Contractor shall provide and use safety devices such as rubber gloves, protective barriers, and danger signs to protect and warn personnel in the test vicinity. The Contractor shall replace any devices or equipment which are damaged due to improper test procedures or handling.

3.20.2 Ground-Resistance Tests

The resistance of each grounding electrode shall be measured using the fall-of-potential method defined in IEEE Std 81. Soil resistivity in the area of the grid shall be measured concurrently with the grid measurements. Ground resistance measurements shall be made before the electrical distribution system is energized and shall be made in normally dry conditions not less than 48 hours after the last rainfall. Resistance measurements of separate grounding electrode systems shall be made before the systems are bonded together below grade. The combined resistance of separate systems may be used to meet the required resistance, but the specified number of electrodes must still be provided.

Single rod electrode - 25 ohms.

3.20.3 Cable Tests

The Contractor shall be responsible for identifying all equipment and devices that could be damaged by application of the test voltage and ensuring that they have been properly disconnected prior to performing insulation resistance testing. An insulation resistance test shall be performed on all low and medium voltage cables after the cables are installed in their final configuration and prior to energization. The test voltage shall be 500 volts DC applied for one minute between each conductor and ground and between all possible combinations of conductors. The minimum value of resistance shall be:

R in megohms = (rated voltage in kV + 1) x 304,800/(length of cable in meters)

Each cable failing this test shall be repaired or replaced. The repaired cable system shall then be retested until failures have been eliminated.

3.20.3.1 Low Voltage Cable Tests

a. Continuity test.

b. Insulation resistance test.

3.20.4 Motor Tests

a. Phase rotation test to ensure proper directions.

b. Operation and sequence of reduced voltage starters.

c. High potential test on each winding to ground.

d. Insulation resistance of each winding to ground.

e. Vibration test.

f. Dielectric absorption test on motor [and starter].

3.20.5 Circuit Breaker Tests

The following field tests shall be performed on circuit breakers.

3.20.5.1 Circuit Breakers, Low Voltage

a. Insulation resistance test phase-to-phase, all combinations.

b. Insulation resistance test phase-to-ground, each phase.

c. Closed breaker contact resistance test.

d. Manual and electrical operation of the breaker.

3.20.5.2 Circuit Breakers, Molded Case

a. Insulation resistance test phase-to-phase, all combinations.

b. Insulation resistance test phase-to-ground, each phase.

c. Closed breaker contact resistance test.

d. Manual operation of the breaker.

3.21 OPERATING TESTS

After the installation is completed, and at such time as the Contracting Officer may direct, the Contractor shall conduct operating tests for approval. The equipment shall be demonstrated to operate in accordance with the specified requirements. An operating test report shall be submitted in accordance with paragraph FIELD TEST REPORTS.

3.22 FIELD SERVICE

3.22.1 Onsite Training

The Contractor shall conduct a training course for the operating staff as designated by the Contracting Officer. The training period shall consist of a total of 8 hours of normal working time and shall start after the system is functionally completed but prior to final acceptance tests. The course instruction shall cover pertinent points involved in operating, starting, stopping, servicing the equipment, as well as all major elements of the operation and maintenance manuals. Additionally, the course instructions shall demonstrate all routine maintenance operations. A VHS format video tape of the entire training shall be submitted.

3.22.2 Installation Engineer

After delivery of the equipment, the Contractor shall furnish one or more field engineers, regularly employed by the equipment manufacturer to supervise the installation of equipment, assist in the performance of the onsite tests, oversee initial operations, and instruct personnel as to the operational and maintenance features of the equipment.

3.23 ACCEPTANCE

Final acceptance of the facility will not be given until the Contractor has successfully completed all tests and after all defects in installation, material or operation have been corrected.

END OF SECTION

SECTION 16528

EXTERIOR LIGHTING

PART 1 GENERAL

1.1 REFERENCES

The publications listed below form a part of this specification to the extent referenced. The publications are referred to in the text by basic designation only.

AMERICAN ASSOCIATION OF STATE HIGHWAY AND TRANSPORTATION OFFICIALS (AASHTO)

AASHTO LTS-3	(1994) Standard Specifications for Structural Supports for Highway Signs, Luminaires and Traffic Signals

AMERICAN NATIONAL STANDARDS INSTITUTE (ANSI)

ANSI C78.1	(1991; C78.1a; R 1996) Fluorescent Lamps - Rapid-Start Types - Dimensional and Electrical Characteristics
ANSI C78.1355	(1989) Electric Lamps - 150-Watt, 55-Volt S55 High-Pressure Sodium Lamps
ANSI C78.1375	(1990; R 1996) 400-Watt, M59 Single-Ended Metal-Halide Lamps
ANSI C78.1376	(1990; R 1996) 1000-Watt, M47 Metal-Halide Lamps
ANSI C80.1	(1995) Rigid Steel Conduit - Zinc Coated
ANSI C82.4	(1992) Ballasts for High-Intensity-Discharge and Low-Pressure Sodium Lamps (Multiple-Supply Type)
ANSI C119.1	(1986) Sealed Insulated Underground Connector Systems Rated 600 Volts
ANSI C135.1	(1979) Galvanized Steel Bolts and Nuts for Overhead Line Construction
ANSI C135.14	(1979) Staples with Rolled or Slash Points for Overhead Line Construction
ANSI C135.30	(1988) Zinc-Coated Ferrous Ground Rods for Overhead or Underground Line Construction
ANSI C136.2	(1985) Luminaires, Voltage Classification of

ANSI C136.3	(1989) Luminaire Attachments - for Roadway Lighting Equipment
ANSI C136.6	(1990) Roadway Lighting Equipment - Metal Heads and Reflector Assemblies - Mechanical and Optical Interchangeability
ANSI C136.9	(1990) Roadway Lighting Equipment - Socket Support Assemblies for Use in Metal Heads - Mechanical Interchangeability
ANSI C136.10	(1995) Locking-type Photocontrol Devices and Mating Receptacles - Physical and Electrical Interchangeability and Testing for Roadway Lighting Equipment
ANSI C136.11	(1988; R 1994) Multiple Sockets for Roadway Lighting Equipment
ANSI C136.15	(1986) High-Intensity-Discharge and Low-Pressure Sodium Lamps in Luminaires - Field Identification
ANSI C136.20	(1990) Roadway Lighting Equipment - Fiber Reinforced Plastic (FRP) Fiber Lighting Poles
ANSI O5.1	(1992) Specifications and Dimensions for Wood Poles

AMERICAN SOCIETY FOR TESTING AND MATERIALS (ASTM)

ASTM A 36/A 36M	(1996) Carbon Structural Steel
ASTM A 48	(1994a) Gray Iron Castings
ASTM A 123	(1989a) Zinc (Hot-Dip Galvanized) Coatings on Iron and Steel Products
ASTM A 153	(1996) Zinc Coating (Hot-Dip) on Iron and Steel Hardware
ASTM A 575	(1989) Steel Bars, Carbon, Merchant Quality, M-Grades
ASTM A 576	(1990b; R 1995) Steel Bars, Carbon, Hot-Wrought, Special Quality
ASTM B 2	(1994) Medium-Hard-Drawn Copper Wire
ASTM B 8	(1995) Concentric-Lay-Stranded Copper Conductors, Hard, Medium-Hard, or Soft
ASTM B 117	(1995) Operating Salt Spray (Fog) Apparatus
ASTM C 478	(1996) Precast Reinforced Concrete Manhole Sections

ASTM D 1654	(1992) Evaluation of Painted or Coated Specimens Subjected to Corrosive Environments

AMERICAN WOOD-PRESERVERS' ASSOCIATION (AWPA)

AWPA C4	(1995) Poles - Preservative Treatment by Pressure Processes
AWPA C25	(1995) Sawn Crossarms - Preservative Treatment by Pressure Processes
AWPA P1/P13	(1995) Standard for Coal Tar Creosote for Land and Fresh Water and Marine (Coastal Water Use)
AWPA P8	(1995) Standards for Oil-Borne Preservatives
AWPA P9	(1992) Standards for Solvents for Organic Preservative Systems

ELECTRONIC INDUSTRIES ASSOCIATION (EIA)

EIA ANSI/EIA/TIA 232-E	(1991) Interface Between Data Terminal Equipment and Data Circuit-Terminating Equipment Employing Serial Binary Data Interchange

ILLUMINATING ENGINEERING SOCIETY OF NORTH AMERICA (IESNA)

IESNA RP-8	(1983; R 1993) Roadway Lighting

INSTITUTE OF ELECTRICAL AND ELECTRONICS ENGINEERS (IEEE)

IEEE C2	(1997) National Electrical Safety Code
IEEE C62.41	(1991) Surge Voltages in Low-Voltage AC Power Circuits
IEEE ANSI/IEEE C136.13	(1987; R 1997) Metal Brackets for Wood Poles
IEEE Std 81	(1983) Guide for Measuring Earth Resistivity, Ground Impedance, and Earth Surface Potentials of a Ground System

NATIONAL ELECTRICAL MANUFACTURERS ASSOCIATION (NEMA)

NEMA 250	(1991) Enclosures for Electrical Equipment (1000 Volts Maximum)
NEMA ICS 1	(1993) Industrial Control and Systems
NEMA ICS 2	(1993) Industrial Control and Systems Controllers, Contactors, and Overload Relays Rated Not More Than 2,000 Volts AC or 750 Volts DC Assemblies
NEMA ICS 6	(1993) Industrial Control and Systems, Enclosures

NEMA OS 1	(1989) Sheet-Steel Outlet Boxes, Device Boxes, Covers, and Box Supports
NEMA OS 2	(1986; Errata Aug 1986; R 1991) Nonmetallic Outlet Boxes, Device Boxes, Covers and Box Supports
NEMA RN 1	(1989) Polyvinyl-Chloride (PVC) Externally Coated Galvanized Rigid Steel Conduit and Intermediate Metal Conduit
NEMA TC 6	(1990) PVC and ABS Plastic Utilities Duct for Underground Installation
NEMA TC 9	(1990) Fittings for ABS and PVC Plastic Utilities Duct for Underground Installation

NATIONAL FIRE PROTECTION ASSOCIATION (NFPA)

NFPA 70	(1999) National Electrical Code

UNDERWRITERS LABORATORIES (UL)

UL 6	(1997) Rigid Metal Conduit
UL 44	(1997; Rev Aug 1997) Rubber-Insulated Wires and Cables
UL 98	(1994; Rev Oct 1995) Enclosed and Dead-Front Switches
UL 467	(1993; Rev Aug 1996) Grounding and Bonding Equipment
UL 486A	(1991; Rev Oct 1991) Wire Connectors and Soldering Lugs for Use with Copper Conductors
UL 486B	(1997; Rev Jun 1997) Wire Connections for Use with Aluminum Conductors
UL 506	(1994; Rev thru Oct 1997) Specialty Transformers
UL 514A	(1996) Metallic Outlet Boxes
UL 514B	(1996) Fittings for Conduit and Outlet Boxes
UL 514C	(1996) Nonmetallic Outlet Boxes, Flush-Device Boxes, and Covers
UL 651	(1995; Rev Jan 1997) Schedule 40 and 80 Rigid PVC Conduit
UL 651A	(1995; Rev Sep 1996) Type EB and A Rigid PVC Conduit and HDPE Conduit

UL 854	(1996; Rev May 1996) Service-Entrance Cables
UL 870	(1995) Wireways, Auxiliary Gutters, and Associated Fittings
UL 886	(1994; Rev thru Jan 1997) Outlet Boxes and Fittings for Use in Hazardous (Classified) Locations
UL 1029	(1994; Rev Sep 1995) High-Intensity-Discharge Lamp Ballasts
UL 1449	(1985; Errata Apr 1986) Transient Voltage Surge Suppressors
UL 1571	(1991; Rev thru Mar 1995) Incandescent Lighting Fixtures
UL 1572	(1995; Rev thru Jun 1997) High Intensity Discharge Lighting Fixtures

1.2 SYSTEM DESCRIPTION

1.2.1 Lighting System

The lighting system shall be configured as specified and shown. The system shall include all fixtures, hardware, poles, cables, connectors, adapters and appurtenances needed to provide a fully functional lighting system.

1.2.2 Electrical Requirements

The equipment shall operate from a voltage source as shown, plus or minus 10 percent, and 60 Hz, plus or minus 2 percent.

1.2.3 Power Line Surge Protection

Transient voltage surge suppressors shall be provided for all electronic equipment. Surge suppressors shall meet the requirements of IEEE C62.41, and be UL listed as having been tested in accordance with UL 1449. Surge suppressor ratings shall be 208 volts rms, operating voltage; 60 Hz; 3-phase; 4 wire with ground; transient suppression voltage (peak let-through-voltage) of 330 volts. Fuses shall not be used as surge suppression.

1.2.4 Interface Between Lighting System and Power Distribution

Conductors shall be as indicated].

1.2.5 Nameplates

Each major component of equipment shall have a nonferrous metal or engraved plastic nameplate which shall show, as a minimum, the manufacturer's name and address, the catalog or style number, the electrical rating in volts, and the capacity in amperes or watts.

1.2.6 Standard Products

Materials and equipment shall be standard products of manufacturer regularly engaged in the manufacture of such products. Items of equipment shall essentially duplicate equipment that has been in satisfactory use at least 2 years prior to bid opening.

1.3 CORROSION PROTECTION

1.3.1 Aluminum Materials

Aluminum shall not be used.

1.3.2 Ferrous Metal Materials

1.3.2.1 Hardware

Ferrous metal hardware shall be hot-dip galvanized in accordance with ASTM A 153 and ASTM A 123.

1.3.2.2 Equipment

Equipment and component items, including but not limited to metal poles and ferrous metal luminaires not hot-dip galvanized or porcelain enamel finished, shall be provided with corrosion-resistant finishes which shall withstand 120 hours of exposure to the salt spray test specified in ASTM B 117 without loss of paint or release of adhesion of the paint primer coat to the metal surface in excess of 1.6 mm (1/16 inch) from the test mark. The scribed test mark and test evaluation shall have a rating of not less than 7 in accordance with TABLE 1, (procedure A) of ASTM D 1654. Cut edges or otherwise damaged surfaces of hot-dip galvanized sheet steel or mill galvanized sheet steel shall be coated with a zinc rich paint conforming to the manufacturer's standard.

1.3.3 Finishing

Painting required for surfaces not otherwise specified and finish painting of items only primed at the factory, shall be as specified in Section 09900 PAINTING, GENERAL.

1.4 SUBMITTALS

Government approval is required for submittals with a "GA" designation; submittals having an "FIO" designation are for information only. The following shall be submitted in accordance with section 01330 SUBMITTAL PROCEDURES:

SD-01 Data

Equipment and Materials; FIO.

Data published by the manufacturer of each item on the list of equipment and material, to permit verification that the item proposed is of the correct size, properly rated or applied, or is otherwise suitable for the application and fully conforms to the requirements specified.

Spare Parts; FIO.

Spare parts data for each item of material and equipment specified, after approval of detail drawings for materials and equipment, and not later than 4 months before the date of beneficial occupancy. The data shall include a complete list of parts, special tools, and supplies, with current unit prices and sources of supply.

SD-04 Drawings

Lighting System; GA.

Detail drawings for the complete system and for poles, lighting fixtures, bracket arms, cable boxes, handholes, transformers, and controllers. Drawings shall include design calculations showing adequate strength of screw foundations.

As-Built Drawings; FIO.

Final as-built drawings shall be finished drawings on mylar or vellum and shall be delivered with the final test report.

SD-09 Reports

Operating Test; GA.

Test procedures and reports for the Operating Test. After receipt by the Contractor of written approval of the test procedures, the Contractor shall schedule the tests. The final test procedures report shall be delivered after completion of the tests.

Ground Resistance Measurements; FIO.

The measured resistance to ground of each separate grounding installation, indicating the location of the rods, the resistance of the soil in ohms per millimeter and the soil conditions at the time the measurements were made. The information shall be in writing.

SD-19 Operation and Maintenance Manuals

Lighting System; GA.

A draft copy of the operation and maintenance manuals, prior to beginning the tests for use during site testing. Final copies of the manuals as specified bound in hardback, loose-leaf binders, within 30 days after completing the field test. The draft copy used during site testing shall be updated with any changes required, prior to final delivery of the manuals. Each manual's contents shall be identified on the cover. The manual shall include names, addresses, and telephone numbers of each subcontractor installing equipment and systems, and nearest service representatives for each item of equipment for each system. The manuals shall have a table of contents and tab sheets. Tab sheets shall be placed at the beginning of each chapter or section and at the beginning of each appendix. The final copies delivered after completion of the field test shall include modifications made during installation checkout and acceptance.

PART 2 PRODUCTS

2.1 STANDARD PRODUCT

Material and equipment shall be the standard product of a manufacturer regularly engaged in the manufacture of the product and shall essentially duplicate items that have been in satisfactory use for at least 2 years prior to bid opening. Items of the same classification shall be identical including equipment, assemblies, parts, and components.

2.2 BRACKET ARMS

2.2.1 On Aluminum, Steel, Fiberglass, and Concrete Poles

Poles shall be provided with bracket arms of the support arm style and of the length indicated on drawings. Bracket arms shall conform to the design of the pole provided. The bracket arms shall be capable of supporting the equipment to be mounted on it with the maximum wind and ice loading encountered at the site. Strength of bracket arms shall be in accordance with IEEE ANSI/IEEE C136.13. Steel brackets shall be galvanized. Wood bracket arms shall not be used.

2.2.2 Floodlight Brackets

Floodlight brackets shall be coordinated with the floodlight support provided.

2.3 CABLE

The Contractor shall provide all wire and cable not indicated as government furnished equipment. Wire and cable components shall be able to withstand the jobsite environment for a minimum of 20 years.

2.3.1 Insulated Cable

Cable shall be type USE conforming to UL 854, with copper conductors and type RHW or XHHW insulation conforming to UL 44, and shall include green ground conductor. Cable shall be rated 600 volts. Parts of the cable system such as splices and terminations shall be rated not less than 600 volts. The size and number of conductors and the number of cables shall be as indicated. Conductors larger than No. 8 AWG shall be stranded.

2.3.2 Bare Copper Conductors

Medium-hard-drawn copper conductors shall conform to ASTM B 2 and ASTM B 8.

2.4 CABLE SPLICES AND CONNECTORS

Cable splices and connectors shall conform to UL 486A. Underground splices and connectors shall also conform to the requirements of ANSI C119.1.

2.5 CABLE BOXES

Boxes and covers shall be made of cast iron with zinc coated or aluminized finish, and shall be of the sizes indicated on drawings. The minimum inside dimensions shall be not less than 304.8 mm (12 inches) square by 152.4 mm (6 inches) deep and not less than required to house the cable splice. A

suitable gasket shall be installed between the box and cover for watertightness. A sufficient number of screws shall be installed to hold the cover in place along the entire surface of contact. Grounding lugs shall be provided.

2.6 MANHOLES, HANDHOLES, AND PULLBOXES

Manholes, handholes, and pullboxes shall be as indicated. Strength of manholes, handholes, and pullboxes and their frames and covers shall conform to the requirements of IEEE C2. Precast concrete manholes shall have the required strength established by ASTM C 478. Frames and covers for manholes shall be made of gray cast iron. A machine-finished seat shall be provided to ensure a matching joint between frame and cover. Cast iron shall comply with ASTM A 48, Class 30B, minimum. Handholes for low voltage cables installed in parking lots, sidewalks, and turfed areas shall be from an aggregate consisting of sand and with continuous woven glass strands having an overall compressive strength of at least 69 Mpa (10,000 psi) and a flexural strength of at least 34.5 MPa (5,000 psi). Pullbox and handhole covers in parking lots, sidewalks, and turfed areas shall be of the same material as the box. Concrete pullboxes shall consist of precast reinforced concrete boxes, extensions, bases, and covers.

2.7 CONDUIT, DUCTS AND FITTINGS

2.7.1 Conduit, Rigid Steel

Rigid steel conduit shall conform to ANSI C80.1 and UL 6.

2.7.2 Conduit Coatings

Underground metallic conduit and fittings shall be coated with a plastic resin system conforming to NEMA RN 1, Type 40. Epoxy systems may also be used.

2.7.3 Conduit Fittings and Outlets

2.7.3.1 Boxes, Metallic Outlets

NEMA OS 1 and UL 514A.

2.7.3.2 Boxes, Nonmetallic, Outlet and Flush-Device Boxes and Covers

NEMA OS 2 and UL 514C.

2.7.3.3 Boxes, Switch (Enclosed), Surface Mounted

UL 98.

2.7.3.4 Fittings for Conduit and Outlet Boxes

UL 514B.

2.7.3.5 Fittings, PVC, for Use with Rigid PVC Conduit and Tubing

UL 514B.

2.7.4 Non-Metallic Duct

Non-metallic duct lines and fittings utilized for underground installation shall be suitable for the application. Duct shall be thick-wall, single, round-bore type. Material of one type shall be used. Acrylonitrile-butadiene-styrene (ABS) duct shall conform to NEMA TC 6 and NEMA TC 9. High-density conduit shall conform to UL 651A. Schedule 40 polyvinyl chloride (PVC) shall conform to UL 651. Plastic utility duct and fittings manufactured without a UL label or listing shall be provided with a certification as follows: "The materials are suitable for use with 75 degree C (167 degrees F) wiring. No reduction of properties in excess of that specified for materials with a UL label or listing will be experienced if samples of the finished product are operated continuously under the normal conditions that produce the highest temperature in the duct."

2.8 GROUND RODS

Ground rods shall be of copper clad steel conforming to UL 467 not less than 19.1 mm (3/4 inch) in diameter by 3.1 m (10 feet) in length of the sectional type driven full length into earth.

2.9 POLES

Metal and concrete poles shall be the pole manufacturer's standard design for supporting the number of fixtures indicated. Poles shall be designed for a wind velocity of 35.8 meters per second (80 mph) at the base of the pole, for a wind gust factor of 1.3, and for the height and drag factors recommended by AASHTO LTS-3. The effective projected area of luminaires and other pole-mounted devices shall be taken into account in pole design. Poles shall have grounding provisions. The type of pole shaft material provided shall not be mixed on any project. Grounding connection shall be provided near the bottom of each metal pole and at each concrete pole anchor base. Scratched, stained, chipped, or dented poles shall not be installed.

2.9.1 Aluminum Poles

Aluminum poles and brackets for walkway lighting shall have a uniform satin finish to match fixtures and shall not be painted. Manufacturer's standard provision shall be made for protecting the finish during shipment and installation. Minimum protection shall consist of spirally wrapping each pole shaft with protective paper secured with tape, and shipping small parts in boxes.

a. Shafts shall be square and of seamless construction. The wall thickness shall be at least 4.8 mm (0.188 in). Exterior surfaces shall be free of protuberances, dents, cracks, and discoloration. Material for shafts shall be 6063 aluminum alloy; after fabrication, the alloy shall have a T6 temper. Tops of shafts shall be fitted with a round or tapered cover. Bases shall be anchor bolt mounted, made of cast aluminum alloy 356-T6, and shall be machined to receive the lower end of shafts. Joints between shafts and bases shall be welded. Bases shall be provided with four holes, spaced 90 degrees apart, for anchorage.

b. Hardware, except anchor bolts, shall be either 2024-T4 anodized aluminum alloy or stainless steel.

2.9.2 Concrete Poles

Concrete poles shall be designed to withstand the loads specified in IEEE C2multiplied by the appropriate overload capacity factors. Poles shall be reinforced or prestressed, either cast or spun. Spun poles shall be manufactured by a centrifugal spinning process with concrete pumped into a

polished round tapered metal mold. Concrete for spun poles shall have a compressive strength of at least 34.5 MPa (5,000 psi) at 28 days; steel wire shall have an ultimate tensile strength of at least 827 MPa (120,000 psi); and reinforcing bars shall have an ultimate tensile strength of at least 276 MPa (40,000 psi). After the high speed spinning action is completed, a spun pole shall be cured by a suitable wet steam process. Spun poles shall have a water absorption of not greater than 3 percent to eliminate cracking and to prevent erosion. Concrete poles shall have hollow shafts. Poles shall have a hard, smooth, nonporous surface that is resistant to soil acids, road salts, and attacks of water and frost. Poles shall not be installed for at least 15 days after manufacture. Fittings and brackets that conform to the concrete pole design shall be provided. Poles shall conform to strength calculations performed by a registered professional engineer and submitted in accordance with detail drawings portion of paragraph SUBMITTALS.

2.9.3 Anchor Bolts

Anchor bolts shall be the pole manufacturer's standard, but not less than necessary to meet the pole wind and ice loading, herein and other specified design requirements.

2.10 POLE LINE HARDWARE

Zinc coated hardware shall conform to ANSI C135.1 and ANSI C135.14, and steel hardware material shall conform to ASTM A 575 and ASTM A 576. Hardware shall be hot-dip galvanized in accordance with ASTM A 153.

2.11 ELECTRICAL ENCLOSURES

The Contractor shall provide metallic enclosures as needed to house the lighting equipment. Enclosures shall conform to NEMA ICS 6 and NEMA 250. Enclosures shall be provided with lockable or padlock handles. Keys for lockable enclosures shall be delivered to the Contracting Officer. The enclosures shall be as specified or as shown on the drawings.

2.11.1 Interior Enclosures

Enclosures to house lighting equipment in an interior environment shall meet the requirements of a NEMA 12 enclosure as defined in NEMA 250.

2.11.2 Exposed-to-Weather Enclosures

Enclosures to house lighting equipment in an outdoor environment shall meet the requirements of a NEMA 4 enclosure as defined in NEMA 250.

2.11.3 Corrosion Resistant Enclosures

Enclosures to house lighting equipment in a corrosive environment shall meet the requirements of a NEMA 4X enclosure as defined in NEMA 250.

2.12 ILLUMINATION

2.12.1 General Lighting

Luminaires, ballasts, lamps, and control devices required for general area lighting, shall be as indicated on the drawings.

2.13 LAMPS AND BALLASTS, HIGH INTENSITY DISCHARGE (HID) SOURCES

2.13.1 High-Pressure Sodium

Lamps shall conform to ANSI C78.1355. Ballasts shall conform to ANSI C82.4, or UL 1029. High-pressure sodium lamps shall be clear.

2.13.2 Metal-Halide

Lamps shall be made by a manufacturer with not less than 5 years experience in making metal-halide lamps. Metal-halide lamps shall conform to ANSI C78.1375 or ANSI C78.1376. Ballasts shall conform to ANSI C82.4 or UL 1029.

2.14 LUMINAIRE COMPONENTS

Luminaire components shall conform to the following: attachments, ANSI C136.3; voltage classification, ANSI C136.2; field identification marking, ANSI C136.15; interchangeability, ANSI C136.6 and ANSI C136.9; and sockets, ANSI C136.11.

2.15 LIGHTING CONTROL EQUIPMENT

2.15.1 Photo-Control Devices

Photo-control devices shall conform to ANSI C136.10. Each photo-control element shall be a replaceable, weatherproof, plug-in or twist-lock assembly adjustable operation range of approximately 5.4 to 53.8 lux. (0.5 to 5.0 foot-candles). Luminaires shall be equipped with weatherproof plug-in or twist-lock receptacle to receive the photo-control element.

2.15.2 Timer Control Switches

Astronomic dial type arranged to turn "ON" at sunset, and turn "OFF" at a pre-determined time between 2030 hours and 0230 hours or sunrise, automatically changing the settings each day in accordance with seasonal changes of sunset and sunrise shall be provided. A switch rated 120 volts, having automatically wound spring mechanism to maintain accurate time for a minimum of 7 hours following a power failure shall be provided. A time switch with a manual on-off bypass switch shall be provided. Housing for the time switch shall be a surface mounted, NEMA 1 (indoor) enclosure conforming to NEMA ICS 6.

2.15.3 Manual Control Switches

Manual control switches shall conform to UL 98. The switches shall be the heavy-duty type and shall be suitable for operation on a 120 volt, 60 Hz system. The number of poles and ampere rating shall be as indicated. Switch construction shall be such that a screwdriver will be required to open the switch door when the switch is on. The selector switch shall have a minimum of three positions: ON, OFF, and AUTOMATIC. The automatic selection shall be used when photoelectric or timer control is desired. The selector switch shall interface with the lighting system magnetic contactor and control its activity.

2.15.4 Safety Switches

Switches shall be the heavy-duty type with NEMA ICS 6 Type 1 enclosures and shall be suitable for operation on a 208Y/120 volt, 60 Hz, three-phase system. Switch construction shall be such that a screwdriver will be required to open the switch door when the switch is on. Blades shall be visible with door open and shall be of the quick-make, quick-break type. Terminal lugs shall be coordinated with the wire size. Switches shall conform to UL 98.

2.15.5 Magnetic Contactor

Magnetic contactors shall be mechanically held, electrically operated, and shall conform to NEMA ICS 1 and NEMA ICS 2. The contactor shall be suitable for 208 volts, 3 phase, 60 Hz. Coil voltage shall be 208 volts. Maximum continuous ampere rating and number of poles shall be as indicated on drawings. Enclosures for contactors mounted indoors shall be NEMA ICS 6, Type 1. Each contactor shall be provided with a spare, normally open auxiliary contact. Terminal lugs shall be coordinated with the wire size.

2.16 PHOTOMETRIC DISTRIBUTION CLASSIFICATION

Photometrics shall conform to IESNA RP-8.

2.17 LUMINAIRES, FLOODLIGHTING

2.17.1 HID

HID lighting fixtures shall conform to UL 1572. Incandescent lighting fixtures shall conform to UL 1571.

2.18 FIXTURES

Standard fixtures shall be as detailed on the drawings. Special fixtures shall be as indicated on the drawings. Illustrations shown on these sheets or on the drawings are indicative of the general type desired and are not intended to restrict selection to fixtures of any particular manufacturer. Fixtures of similar design, equivalent light distribution and brightness characteristics, equal finish and quality will be acceptable as approved.

2.18.1 Accessories

Accessories such as straps, mounting plates, nipples, or brackets shall be provided for proper installation.

2.18.2 Special Fixtures

The types of special fixtures are designated by letters and numbers. For example, SP-1 denotes special Type 1.

2.18.3 In-Line Fuse

An in-line fuse shall be provided for each fixture, and shall consist of a fuse and a UL approved waterproof fuse holder rated at 30 amperes, 600 volts, with insulated boots. Fuse rating shall be 600 volts.

PART 3 EXECUTION

3.1 GENERAL

The Contractor shall install all system components, including government furnished equipment, and appurtenances in accordance with the manufacturer's instructions, IEEE C2, and contract documents, and shall furnish necessary hardware, fixtures, cables, wire, connectors, interconnections, services, and adjustments required for a complete and operable system.

3.1.1 Current Site Conditions

The Contractor shall verify that site conditions are in agreement with the design package. The Contractor shall report all changes to the site or conditions that will affect performance of the system to the Government. The Contractor shall not take any corrective action without written permission from the Government.

3.1.2 Existing Equipment

The Contractor shall connect to and utilize existing lighting equipment and devices as shown. Lighting equipment that is usable in their original configuration without modification may be reused with Government approval. The Contractor shall perform a field survey, including testing and inspection of existing lighting equipment and control lines intended to be incorporated into the lighting system, and furnish a report to the Government. For those items considered nonfunctioning, specification sheets, or written functional requirements to support the findings and the estimated cost to correct the deficiency shall be provided with the report. As part of the report, the Contractor shall include the scheduled need date for connection to all existing equipment. The Contractor shall make written requests and obtain approval prior to disconnecting any control lines and equipment, and creating equipment downtime. Such work shall proceed only after receiving Government approval of these requests. If any device fails after the Contractor has commenced work on that device, the Contractor shall diagnose the failure and perform any necessary corrections to the equipment. The Government is responsible for maintenance and repair of Government equipment. The Contractor shall be held responsible for repair costs due to Contractor negligence or abuse of Government equipment.

3.2 ENCLOSURE PENETRATIONS

Enclosure penetrations shall be from the bottom unless the system design requires penetrations from other directions. Penetrations of interior enclosures involving transitions of conduit from interior to exterior, and penetrations on exterior enclosures shall be sealed with rubber silicone sealant to preclude the entry of water. The conduit riser shall terminate in a hot-dipped galvanized metal cable terminator. The terminator shall be filled with an approved sealant as recommended by the cable manufacturer, and in such a manner that the cable is not damaged.

3.3 PREVENTION OF CORROSION

3.3.1 Aluminum

Aluminum shall not be used in contact with earth or concrete, and where connected to dissimilar metal, shall be protected by approved fittings and treatment.

3.3.2 Steel Conduits

Steel conduits shall not be installed within concrete slabs-on-grade. Steel conduits installed underground or under slabs-on-grade, or penetrating slabs-on-grade, shall be field wrapped with 254 micrometers (0.010 inch) 0.010 inch thick pipe-wrapping plastic tape applied with a 50 percent overlap, or shall have a factory-applied plastic resin, epoxy coating. Zinc coating may be omitted from steel conduit which has a factory-applied epoxy coating.

3.3.3 Cold Galvanizing

Field welds and/or brazing on factory galvanized boxes, enclosures, conduits, etc. shall be coated with a cold galvanized paint containing at least 95 percent zinc by weight.

3.4 CABLE INSTALLATION

Cable and all parts of the cable system such as splices and terminations shall be rated not less than 600 volts. The size and number of conductors and the number of cables shall be as indicated. Conductors larger than No. 8 AWG shall be stranded. Each circuit shall be identified by means of fiber or nonferrous metal tags, or approved equal, in each handhole and at each terminal.

3.4.1 Splices

Splices below grade shall be made with nonpressure-filled resin systems using transparent, interlocking, self-venting, longitudinally split plastic molds. Splices above grade shall be made with sealed insulated pressure connectors and shall provide insulation and jacket equal to that of the cable. In order to prevent moisture from entering the splice, jackets shall be cut back to expose the required length of insulation between the jacket and the tapered end of the insulation.

3.4.2 Installation in Duct Lines

Ground conductors shall be installed in duct with the associated phase conductors. Cable splices shall be made in handholes only.

3.5 DUCT LINES

3.5.1 Requirements

Numbers and size of ducts shall be as indicated. Duct lines shall be laid with a minimum slope of 100 mm per 30 m. (4 inches per 100 feet). Depending on the contour of the finished grade, the high point may be at a terminal, a manhole, a handhole, or between manholes or handholes. Short radius manufactured 90 degree duct bends may be used only for pole or equipment risers, unless specifically indicated as acceptable. The minimum manufactured bend radius shall be 450 mm (18 inches) for ducts of less than 80 mm (3 inches) in diameter, and 900 mm (36 inches) for duct 80 mm (3 inches) or greater in diameter. Otherwise, long sweep bends having a minimum radius of 7.6 m (25 feet) shall be used for a change of direction of more than 5 degrees, either horizontally or vertically. Both curved and straight sections may be used to form long sweep bends, but the maximum curve used shall be 30 degrees and manufactured bends shall be used. Ducts shall be provided with end bells when duct lines terminate in manholes or handholes.

3.5.2 Treatment

Ducts shall be kept clean of concrete, dirt, or foreign substances during construction. Field cuts requiring tapers shall be made with proper tools and shall match factory tapers. A coupling recommended by the duct manufacturer shall be used when an existing duct is connected to a duct of different material or shape. Ducts shall be stored to avoid warping and deterioration with ends sufficiently plugged to prevent entry of any water or solid substances. Ducts shall be thoroughly cleaned before being laid. Plastic ducts shall be stored on a flat surface and protected from the direct rays of the sun.

3.5.3 Concrete Encasement

Ducts requiring concrete encasements shall comply with NFPA 70 except that electrical duct bank configurations for ducts 150 mm (6 inches) in diameter shall be determined by calculation and as shown on the drawings. Duct line encasements shall be monolithic construction. Where a connection is made to a previously poured encasement, the new encasement shall be well bonded or doweled to the existing encasement. At any point, except railroad and airfield crossings, tops of concrete encasements shall not be less than the cover requirements listed in NFPA 70. At railroad and airfield crossings, duct lines shall be encased with concrete and reinforced as indicated to withstand specified surface landings. Tops of concrete encasement shall not be less than 1.5 m (5 feet) below tops of rails or airfield paving unless otherwise indicated. Where ducts are jacked under existing pavement, rigid steel conduit shall be installed. To protect the corrosion-resistant conduit coating, predrilling or installing conduit inside a larger iron pipe sleeve (jack-and-sleeve) is required. For crossings of existing railroads and airfield pavements greater than 15 m (50 feet) in length, the predrilling method or the jack-and-sleeve method shall be used. Separators or spacing blocks shall be made of steel, concrete, plastic, or a combination of these materials placed not more than 1.2 m (4 foot) on centers. Ducts shall be securely anchored to prevent movement during the placement of concrete, and joints shall be staggered at least 150 mm (6 inches) vertically.

3.5.4 Nonencased Direct-Burial

Top of duct lines shall be below the frost line depth of 600 mm, but not less than 900 mm below finished grade and shall be installed with a minimum of 75 mm (3 inches) of earth around each duct, except that between adjacent electric power and communication ducts, 300 mm (12 inches) of earth is required. Bottom of trenches shall be graded toward manholes or handholes and shall be smooth and free of stones, soft spots, and sharp objects. Where bottoms of trenches comprise materials other than sand, a 75 mm (3 inch) layer of sand shall be laid first and compacted to approximate densities of surrounding firm soil before installing ducts. Joints in adjacent tiers of duct shall be vertically staggered at least 150 mm (6 inches). The first 150 mm (6 inch) layer of backfill cover shall be sand compacted as previously specified. The rest of the excavation shall be backfilled and compacted in 75 to 150 mm (3 to 6 inch) layers. Duct banks may be held in alignment with earth. However, high tiered banks shall use a wooden frame or equivalent form to hold ducts in alignment prior to backfilling.

3.5.5 Installation of Couplings

Joints in each type of duct shall be made up in accordance with the manufacturer's recommendation for the particular type of duct and coupling selected and as approved.

3.5.5.1 Plastic Duct

Duct joints shall be made by brushing a plastic solvent on insides of plastic coupling fittings and on outsides of duct ends. Each duct and fitting shall then be slipped together with a quick 1/4 turn to set the joint tightly.

3.5.6 Concrete

Concrete work shall be as specified in Section 03300 CAST-IN-PLACE STRUCTURAL CONCRETE. Concrete shall be plain, 17 MPa (2500 psi) at 28 days, except that reinforced concrete shall be 21 MPa (3000 psi) at 28 days. Duct line encasement shall be of monolithic construction. Where a connection is made to an existing duct line, the concrete encasement shall be well bonded or doweled to the existing encasement.

3.5.7 Duct Line Markers

Duct line markers shall be provided as indicated. In addition to markers, a 0.127 mm (5 mil) brightly colored plastic tape, not less than 75 mm (3 inches) in width and suitably inscribed at not more than 3 m (10 feet) on centers with a continuous metallic backing and a corrosion-resistant 0.0254 mm (1 mil) metallic foil core to permit easy location of the duct line, shall be placed approximately 300 mm (12 inches) below finished grade levels of such lines.

3.6 HANDHOLES

The exact locations shall be determined after carefully considering the locations of other utilities, grading, and paving. Exact locations shall be approved before construction is started.

3.6.1 Construction

Handholes shall be constructed as indicated on drawings, including appurtenances. Top, walls, and bottom shall consist of reinforced concrete. Walls and bottom shall be of monolithic construction. Concrete shall be 21 MPa (3000 psi) at 28 days. Precast concrete handholes having the same strength and inside dimensions as cast-in-place concrete handholes may be used. In paved areas, the top of entrance covers shall be flush with the finished surface of the paving. In unpaved areas, the top of entrance covers shall be approximately 15 mm (1/2 inch) above the finished grade. Where finished grades are in cut areas, unmortared brick shall be installed between the top of handhole and entrance frame to temporarily elevate the entrance cover to existing grade level. Where duct lines enter walls, the sections of duct may be cast in the concrete or may enter the wall through a suitable opening. The openings around entering duct lines shall be caulked tight with lead wool or other approved material.

3.6.2 Appurtenances

The following appurtenances shall be provided for each handhole.

3.6.3 Cable Pulling-In Irons

A cable pulling-in iron shall be installed in the wall opposite each duct line entrance.

3.6.4 Ground Rods

In each handhole, at a convenient point close to the wall, a ground rod conforming to paragraph GROUNDING shall be driven into the earth before the floor is poured; approximately 100 mm (4 inches) of the ground rod shall extend above the floor after pouring. When precast concrete units are used, the top of the ground rod may be below the floor; a No. 1/0 AWG copper ground conductor shall be brought inside through a watertight sleeve in the wall.

3.7 POLE INSTALLATION

Pole lengths shall provide a luminaire mounting height as indicated on the drawings. Luminaire mounting height may be increased by the height of the transformer base where required. Electrical cabling shall be provided to the light pole. The mount interfaces shall have ac power connected, and the pole wiring harness shall be connected to the luminaire. Pole installation shall conform to the manufacturer's recommendations, NFPA 70, and IEEE C2. Poles shall be set straight and plumb.

3.7.1 Pole Brackets

Brackets shall be installed as specified by the manufacturer and as shown on drawings. Mounting hardware shall be sized appropriately to secure the mount, luminaire, and housing with wind and ice loading normally encountered at the site. Identical brackets shall be used with one type of luminaire.

3.7.2 Concrete Foundations

Concrete foundations shall have anchor bolts accurately set in the foundation using a template supplied by the pole manufacturer. Once the concrete has cured, the pole shall be set on the foundation, leveled on the foundation bolts, and secured with the holding nuts. The space between the foundation and the pole base shall be grouted. Concrete and grout work shall conform to Section 03300 CAST-IN-PLACE STRUCTURAL CONCRETE. Concrete shall be 21 MPa (3000 psi) at 28 days.

3.7.3 Rigid Steel Conduit Ells

Rigid steel conduit ells shall be provided at all poles.

3.7.4 Aluminum, Steel, Fiberglass and Concrete Pole Installation

Poles shall be mounted on cast-in-place or power-installed screw foundations. Concrete poles shall be embedded in accordance with the details shown. Conduit elbows shall be provided for cable entrances into pole interiors.

3.7.4.1 Cast-In-Place Foundations

Concrete foundations, sized as indicated, shall have anchor bolts accurately set in foundations using templates supplied by the pole manufacturer. Concrete work and grouting is specified in Section 03300CAST-IN-PLACE STRUCTURAL CONCRETE. After the concrete has cured, pole anchor bases shall be set on foundations and leveled by shimming between anchor bases and foundations or by setting anchor bases on leveling nuts and grouting. Poles shall be set plumb. Anchor bolts shall be the manufactures standard, and not less than necessary to meet the pole wind loading and other specified design requirements.

3.7.4.2 Power-Installed Screw Foundations

Power-installed screw foundations having the required strength mounting bolt and top plate dimensions may be utilized. Screw foundations shall be of at least 6.4 mm (1/4 inch) thick structural steel conforming to ASTM A 36/A 36M and hot-dip galvanized in accordance with ASTM A 123. Conduit slots in screw foundation shafts and top plates shall be marked to indicate orientation. Design calculations indicating adequate strength shall be approved before installation of any screw foundation.

3.8 LIGHTING

3.8.1 Lamps

Lamps of the proper type, wattage, and voltage rating shall be delivered to the project in the original containers and installed in the fixtures just before completion of the project.

3.8.2 Fixture Installation

Standard fixtures shall be installed as detailed on the drawings. Special fixtures shall be as indicated on drawings. Illustrations shown on these sheets or on the drawings are indicative of the general type desired and are not intended to restrict selection of fixtures to any particular manufacturer. Fixtures of similar design, equivalent light-distribution and brightness characteristics, and equal finish and quality will be acceptable as approved.

3.8.2.1 Accessories

Accessories such as straps, mounting plates, nipples, or brackets shall be installed as required for proper installation.

3.8.2.2 In-Line Fuses

An in-line fuse shall be provided for each fixture.

3.8.2.3 Special Fixtures

The types of special fixtures are designated by letters and numbers. For example, SP-1 denotes special type 1.

3.9 LIGHTING CONTROL SYSTEM

3.9.1 Photo-Control

Lighting luminaires shall be individually controlled by photo-control elements mounted on the heads of the luminaires.

3.9.2 Time Control Switches

Switches shall be installed with not less than four 6.4 mm (1/4 inch) bolts. The use of sheet metal screws will not be allowed.

3.9.3 Manual and Safety Switches

Terminal lugs shall be coordinated with the wire size. Switches shall be securely fastened to the supporting structure or wall using not less than four 6.4 mm (1/4 inch) bolts. The use of sheet metal screws will not be allowed.

3.9.4 Magnetic Contactors

Terminal lugs shall be coordinated with the wire size. Switches shall be securely fastened to the supporting structure or wall using not less than four 6.4 mm (1/4 inch) bolts. The use of sheet metal screws will not be allowed.

3.10 GROUNDING

Grounding shall be in conformance with NFPA 70, the contract drawings, and the following. Grounding conductors shall be soft-drawn, stranded copper. Ground rods shall be driven into the earth so that after the installation is complete, the top of the ground rod will be approximately 300 mm (1 foot) below finished grade, except in handholes. Butt grounds shall not be used.

3.10.1 Ground Rods

The resistance to ground shall be measured using the fall-of-potential method described in IEEE Std 81. The maximum resistance of a driven ground rod shall not exceed 25 ohms under normally dry conditions. Whenever the required ground resistance is not met, additional electrodes shall be provided to achieve the specified ground resistance. The additional electrodes shall be up to three, 3 m (10 feet) long rods spaced a minimum of 3 m (10 feet apart) coupled and driven with the first rod. In high ground resistance, UL listed chemically charged ground rods may be used. If the resultant resistance exceeds 25 ohms measured not less than 48 hours after rainfall, the Contracting Officer shall be notified immediately. Connections below grade shall be fusion welded. Connections above grade shall be fusion welded or shall use UL 467 approved connectors.

3.10.2 Items to be Grounded

Ground conductors, metallic conduits, junction boxes, and noncurrent-carrying metallic parts of equipment shall be grounded. Connections above grade shall be made with solderless connectors, and those below grade shall be made by a fusion-welding process.

3.10.3 Lighting Pole

One ground rod shall be provided at each pole. Bases of metal or concrete lighting poles shall be connected to ground rods by means of No. 8 AWG bare copper wire. Lighting fixture brackets on wood and concrete poles shall be grounded to a No. 6 AWG bare copper grounding conductor connected to the ground rod.

3.10.4 Handhole

In each handhole, at a convenient point close to the wall, a ground rod shall be driven into the earth before the floor is poured, and approximately 100 mm (4 inches) of the ground rod shall extend above the floor after pouring. When precast concrete units are used, the top of the ground rod may be below the floor, and a No. 1/0 AWG copper ground conductor shall be brought inside through a watertight sleeve in the wall. Connection to ground rods shall be by means of bolted-clamp terminals or by an

approved fusion-welding process. Ground wires shall be neatly and firmly attached to handhole walls, and the amount of exposed bare wire shall be held to a minimum.

3.10.5 Metal Cable Boxes

Metal cable boxes for direct-burial cable shall be connected to adjacent ground rods by wires with current-carrying capacities of at least 20 percent of the spliced phase conductors, but not less than No. 6 AWG.

3.11 TESTS

3.11.1 Operating Test

After the installation is completed and at such time as the Contracting Officer may direct, the Contractor shall conduct an operating test for approval. The equipment shall be demonstrated to operate in accordance with the requirements specified. The test shall be performed in the presence of the Contracting Officer. The Contractor shall furnish instruments and personnel required for the test, and the Government will furnish the necessary electric power.

3.11.3 Ground Resistance Measurements

The resistance to ground shall be measured by the fall-of-potential method described in IEEE Std 81.

The Contractor shall maintain a separate set of drawings, elementary diagrams and wiring diagrams of the lighting to be used for "as-built" drawings. This set shall be accurately kept up to date by the Contractor with all changes and additions to the lighting system. In addition to being complete and accurate, this set of drawings shall be kept neat and shall not be used for installation purposes. Upon completion of the as-built drawings, a representative of the Government will review the as-built work with the Contractor. If the as-built work is not complete, the Contractor will be so advised and shall complete the work as required.

END OF SECTION

This page intentionally blank

SECTION 16710

PREMISES DISTRIBUTION SYSTEM

PART 1 GENERAL

1.1 REFERENCES

The publications listed below form a part of this specification to the extent referenced. The publications are referred to in the text by basic designation only.

ELECTRONIC INDUSTRIES ASSOCIATION (EIA)

EIA ANSI/TIA/EIA-568-A	(1995) Commercial Building Telecommunications Cabling Standard
EIA ANSI/TIA/EIA-569	(1996) Commercial Building Standard for Telecommunications Pathways and Spaces
EIA ANSI/TIA/EIA-606	(1993) Administration Standard for the Telecommunications Infrastructure of Commercial Buildings
EIA ANSI/TIA/EIA-607	(1994) Commercial Building Grounding and Bonding Requirements for Telecommunications
EIA TSB 67	(1995) Transmission Performance Specifications for Field Testing of Unshielded Twisted Pair Cabling Systems

IBM PUBLICATION CORPORATION (IBM)

IBM GA27-3361-07	(1987) LAN Cabling System - Planning and Installation
IBM GA27-3773-0	(1987) Cabling System Technical Interface Specifications

INSULATED CABLE ENGINEERS ASSOCIATION (ICEA)

ICEA S-80-576	(1994) Communications Wire and Cable for Wiring of Premises
ICEA S-83-596	(1994) Fiber Optic Premises Distribution Cable

NATIONAL FIRE PROTECTION ASSOCIATION (NFPA)

NFPA 70	(1999) National Electrical Code

UNDERWRITERS LABORATORY (UL)

UL 50	(1995; Rev thru Oct 1997) Enclosures for Electrical Equipment

1.2 SYSTEM DESCRIPTION

The premises distribution system shall consist of inside-plant horizontal, riser, and backbone cables and connecting hardware to transport telephone and data (including LAN) signals between equipment items in a building.

1.3 ENVIRONMENTAL REQUIREMENTS

Connecting hardware shall be rated for operation under ambient conditions of 0 to 60 degrees C and in the range of 0 to 95 percent relative humidity, noncondensing.

1.4 QUALIFICATIONS

1.4.1 Minimum Contractor Qualifications

All work under this section shall be performed by and all equipment shall be furnished and installed by a certified Telecommunications Contractor, hereafter referred to as the Contractor. With the exception of furnishing and installing conduit, electrical boxes, and pullwires, this work shall not be done by the Electrical Contractor. The Contractor shall have the following qualifications in Telecommunications Systems installation:

a. Contractor shall have a minimum of 3 years experience in the application, installation and testing of the specified systems and equipment.

b. All supervisors and installers assigned to the installation of this system or any of its components shall have factory certification from each equipment manufacturer that they are qualified to install and test the provided products. General electrical trade staff (electricians) shall not be used for the installation of the premises distribution system cables and associated hardware.

c. All installers assigned to the installation of this system or any of its components shall have a minimum of 3 years experience in the installation of the specified copper and fiber optic cable and components.

1.4.2 Minimum Manufacturer Qualifications

The equipment and hardware provided under this contract will be from manufacturers that have a minimum of 3 years experience in producing the types of systems and equipment specified.

1.5 SUBMITTALS

Government approval is required for submittals with a "GA" designation; submittals having an "FIO" designation are for information only. The following shall be submitted in accordance with Section 01330 SUBMITTAL PROCEDURES:

SD-01 Data

Spare Parts; FIO.

Lists of spare parts, tools, and test equipment for each different item of material and equipment specified, after approval of detail drawings, not later than 2 months prior to the date of beneficial occupancy. The data shall include a complete list of parts and supplies, with current unit prices and source of supply, and a list of spare parts recommended for stocking.

SD-04 Drawings

Premises Distribution System; GA.

Detail drawings including a complete list of equipment and material. Detail drawings shall contain complete wiring and schematic diagrams and other details required to demonstrate that the system has been coordinated and will function properly as a system. Drawings shall include vertical riser diagrams, equipment rack details, elevation drawings of telecommunications closet walls, outlet face plate details for all outlet configurations, sizes and types of all cables, conduits, and cable trays. Drawings shall show proposed layout and anchorage of equipment and appurtenances, and equipment relationship to other parts of the work including clearance for maintenance and operation.

Record Drawings; GA.

Record drawings for the installed wiring system infrastructure per EIA ANSI/TIA/EIA-606. The drawings shall show the location of all cable terminations and location and routing of all backbone and horizontal cables. The identifier for each termination and cable shall appear on the drawings.

SD-06 Instructions

Manufacturer's Recommendations; GA.

Where installation procedures or any part thereof, are required to be in accordance with the recommendations of the manufacturer of the material being installed, printed copies of these recommendations, prior to installation shall be provided. Installation of the item will not be allowed to proceed until the recommendations are received and approved.

SD-08 Statements

Test Plan; GA.

Test plan defining the tests required to ensure that the system meets technical, operational and performance specifications, 30 days prior to the proposed test date. The test plan must be approved before the start of any testing. The test plan shall identify the capabilities and functions to be tested, and include detailed instructions for the setup and execution of each test and procedures for evaluation and documentation of the results.

Qualifications; GA.

The qualifications of the Manufacturer, Contractor, and the Installer to perform the work specified herein. This shall include proof of the minimum qualifications specified herein.

SD-09 Reports

Test Reports; FIO.

Test reports in booklet form with witness signatures verifying execution of tests. Test results will also be provided on 89 mm diskettes in ASCII format. Reports shall show the field tests performed to verify compliance with the specified performance criteria. Test reports shall include record of the physical parameters verified during testing. Test reports shall be submitted within 7 days after completion of testing.

SD-13 Certificates

Premises Distribution System; FIO.

Written certification that the premises distribution system complies with the EIA ANSI/TIA/EIA-568-A, EIA ANSI/TIA/EIA-569, and EIA ANSI/TIA/EIA-606 standards.

Materials and Equipment; GA.

Where materials or equipment are specified to conform, be constructed or tested to meet specific requirements, certification that the items provided conform to such requirements. Certification by a nationally recognized testing laboratory that a representative sample has been tested to meet the requirements, or a published catalog specification statement to the effect that the item meets the referenced standard, will be acceptable as evidence that the item conforms. Compliance with these requirements does not relieve the Contractor from compliance with other requirements of the specifications.

Installers; GA.

The Contractor shall submit certification that all the installers are factory certified to install and test the provided products.

SD-18 Records

Record Keeping and Documentation; GA.

Documentation on cables and termination hardware in accordance with EIA ANSI/TIA/EIA-606.

1.6 DELIVERY AND STORAGE

Equipment delivered and placed in storage shall be stored with protection from the weather, humidity and temperature variation, dirt and dust or other contaminants.

1.7 OPERATION AND MAINTENANCE MANUALS

Commercial off the shelf manuals shall be furnished for operation, installation, configuration, and maintenance for all products provided as a part of the premises distribution system. Specification sheets for all cable, connectors, and other equipment shall be provided.

1.8 RECORD KEEPING AND DOCUMENTATION

1.8.1 Cables

A record of all installed cable shall be provided in hard copy format and on electronic media using Windows based computer cable management software per EIA ANSI/TIA/EIA-606. The cable records shall include the required data fields for each cable and complete end-to-end circuit report for each complete circuit from the assigned outlet to the entry facility per EIA ANSI/TIA/EIA-606.

1.8.2 Termination Hardware

A record of all installed patch panels and outlets shall be provided in hard copy format and on electronic media using Windows based computer cable management software per EIA ANSI/TIA/EIA-606. The hardware records shall include only the required data fields per EIA ANSI/TIA/EIA-606.

PART 2 PRODUCTS

2.1 MATERIALS AND EQUIPMENT

Materials and equipment shall be the standard products of a manufacturer regularly engaged in the manufacture of the products and shall be the manufacturer's latest standard design that has been in satisfactory use for at least 1 year prior to installation. Materials and equipment shall conform to the respective publications and other requirements specified below and to the applicable requirements of NFPA 70.

2.2 UNSHIELDED TWISTED PAIR CABLE SYSTEM

2.2.1 Cable Insulation

For each individual Category 5 cable, the insulation, material used on each pair shall be exactly the same in all physical, electrical, and chemical respects. The use of Teflon insulated, plenum rated Category 5 cable is acceptable for both plenum and non-plenum applications. If Teflon insulated plenum rated cable is used by the Contractor, it shall be Type 4x0, where all four pairs are Teflon insulated. Type 3x1 and 2x2 are not acceptable.

2.2.2 Riser Cable

Riser cable shall meet the requirements of ICEA S-80-576 and EIA ANSI/TIA/EIA-568-A for Category 5 cable. Cable shall be label-verified. Cable jacket shall be factory marked at regular intervals indicating verifying organization and performance level. Conductors shall be solid untinned copper 24 AWG. Cable shall be rated CMP per NFPA 70.

2.2.3 Horizontal Cable

Horizontal cable shall meet the requirements of EIA ANSI/TIA/EIA-568-A for Category 5 horizontal cable. Cable shall be label-verified. Cable jacket shall be factory marked at regular intervals indicating verifying organization and performance level. Conductors shall be solid untinned copper 24 AWG. Cable shall be rated CMP per NFPA 70.

2.2.4 Connecting Hardware

Connecting and cross-connecting hardware shall be the same category as the cable it serves. Hardware shall be in accordance with and EIA ANSI/TIA/EIA-568-A.

2.2.4.1 Telecommunications Outlets

Wall and desk outlet plates shall come equipped with 4 modular jacks, 2 labeled "voice" and 2 labeled "data." Data modules shall be Red or Blue in color, Voice modules shall match faceplate in color. Modular jacks shall be the same category as the cable they terminate and shall meet the requirements of EIA ANSI/TIA/EIA-568-A. Modular jack pin/pair configuration shall be T568A per EIA ANSI/TIA/EIA-568-A. Modular jacks shall be unkeyed. Faceplates shall be provided and shall be ivory in color, impact resistant plastic. Mounting plates shall be provided for system furniture and shall match the system furniture in color. Outlet assemblies used in the premises distribution system shall consist of modular jacks assembled into both simplex and duplex outlet assemblies in single gang cover as indicated on the drawings. The modular jacks shall conform to the requirements of EIA ANSI/TIA/EIA-568-A, Category 5.

2.2.4.2 Patch Panels

Patch panels shall consist of category 5 eight-position modular jacks, with rear mounted type 110 insulation displacement connectors, arranged in rows or columns on 480 mm (19 inch) rack mounted. Jack pin/pair configuration shall be T568A per EIA ANSI/TIA/EIA-568-A. Jacks shall be unkeyed. Panels shall be labeled with alphanumeric x-y coordinates.

2.2.4.3 Terminal Blocks

Terminal blocks shall be wall mounted wire termination units consisting of insulation displacement connectors mounted in plastic blocks, frames or housings. Blocks shall be type 66, which meet the requirements of EIA ANSI/TIA/EIA-568-A for Category 5. Blocks shall be mounted on standoffs and shall include cable management hardware. Insulation displacement connectors shall terminate 22 or 24 gauge solid copper wire as a minimum, and shall be connected in pairs so that horizontal cable and connected jumper wires are on separate connected terminals. All cables shall enter their respective termination blocks from the bottom leaving space above the blocks for jumper management.

2.3 EQUIPMENT RACKS

2.3.1 Floor Mounted Open Frame

Floor mounted equipment racks shall be welded steel relay racks with uprights to mount equipment (19 inches) wide. Uprights shall be 3 inch deep channel, 1-1/4 inches wide, drilled and tapped 12-24 in a

1/2 inch pattern. Racks shall be provided with a standard top crossmember, and predrilled base plate to allow floor fastening. Open frame equipment racks shall be 7 feet in height and clear coated.

2.3.2 Cable Guides

Cable guides shall be specifically manufactured for the purpose of routing cables, wires and patch cords horizontally and vertically on [19-inch] [23 inch] equipment racks. Cable guides shall consist of ring or bracket-like devices mounted on rack panels for horizontal use or individually mounted for vertical use. Cable guides shall mount to racks by screws and/or nuts and lockwashers.

2.3.3 Electrical Power

4 duplex receptacles shall be provided at each rack. Receptacles shall conform to the requirements of Section 16415, ELECTRICAL WORK, INTERIOR.

2.4 EQUIPMENT MOUNTING BACKBOARD

Plywood backboards shall be provided, sized as shown, painted with white or light colored paint.

2.5 TELECOMMUNICATIONS OUTLET BOXES

Electrical boxes for telecommunication outlets shall be 117 mm square by 53 mm deep with minimum 9 mm deep single gang plaster ring as shown. Provide a minimum 25 mm conduit.

PART 3 EXECUTION

3.1 INSTALLATION

System components and appurtenances shall be installed in accordance with NFPA 70, manufacturer's instructions and as shown. Necessary interconnections, services, and adjustments required for a complete and operable signal distribution system shall be provided. Components shall be labeled in accordance with EIA ANSI/TIA/EIA-606. Penetrations in fire-rated construction shall be firestopped in accordance with Section 07270 FIRESTOPPING. Conduits, outlets and raceways shall be installed in accordance with Section 16415 ELECTRICAL WORK, INTERIOR. Wiring shall be installed in accordance with EIA ANSI/TIA/EIA-568-A and as specified in Section 16415 ELECTRICAL WORK, INTERIOR. Wiring, and terminal blocks and outlets shall be marked in accordance with EIA ANSI/TIA/EIA-606. Cables shall not be installed in the same cable tray, utility pole compartment, or floor trench compartment with ac power cables. Cables not installed in conduit or wireways shall be properly secured and neat in appearance and, if installed in plenums or other spaces used for environmental air, shall comply with NFPA 70 requirements for this type of installation.

3.1.1 Horizontal Distribution Cable

The rated cable pulling tension shall not be exceeded. Cable shall not be stressed such that twisting, stretching or kinking occurs. Cable shall not be spliced. Copper cable not in a wireway shall be suspended a minimum of 200 mm above ceilings by cable supports no greater than 1.5 m 300mm apart. Cable shall not be run through structural members or in contact with pipes, ducts, or other potentially damaging items. Placement of cable parallel to power conductors shall be avoided, if possible; a minimum separation of 300 mm (12 inches) shall be maintained when such placement cannot be avoided.

Cables shall be terminated; no cable shall contain unterminated elements. Minimum bending radius shall not be exceeded during installation or once installed. Cable ties shall not be excessively tightened such that the transmission characteristics of the cable are altered.

3.1.2 Riser and Backbone Cable

Vertical cable support intervals shall be in accordance with manufacturer's recommendations. Cable bend radius shall not be less than ten times the outside diameter of the cable during installation and once installed. Maximum tensile strength rating of the cable shall not be exceeded. Cable shall not be spliced.

3.1.3 Telecommunications Outlets

3.1.3.1 Faceplates

As a minimum each jack shall be labeled as to its function and a unique number to identify cable link.

3.1.3.2 Cables

Unshielded twisted pair cables shall have a minimum of 150 mm of slack cable loosely coiled into the telecommunications outlet boxes. Minimum manufacturers bend radius for each type of cable shall not be exceeded.

3.1.3.3 Pull Cords

Pull cords shall be installed in all conduit serving telecommunications outlets which do not initially have fiber optic cable installed.

3.1.4 Terminal Blocks

Terminal blocks shall be mounted in orderly rows and columns. Adequate vertical and horizontal wire routing areas shall be provided between groups of blocks. Industry standard wire routing guides shall be utilized. All cables shall enter from the bottom of the communication backboard. Cables coming from above must be routed down the side and across the bottom of the communication backboard and up into the terminating blocks.

3.1.5 Unshielded Twisted Pair Patch Panels

Patch panels shall be mounted in equipment racks with sufficient modular jacks to accommodate the installed cable plant plus 10 percent spares. Cable guides shall be provided above, below and between each panel.

3.1.6 Equipment Racks

Equipment racks shall be bolted to the floor. Cable guides shall be bolted or screwed to racks. Racks shall be installed level. Ganged racks shall be bolted together. Ganged rack cabinets shall have adjacent side panels removed. Wall mounted racks shall be secured to the mounting surface to prevent fully loaded racks from separating from the mounting surface. All racks shall have seismic bracing conforming to the requirements of Section 16070, SEISMIC PROTECTION FOR ELECTRICAL EQUIPMENT.

3.1.7 Rack Mounted Equipment

Equipment to be rack mounted shall be securely fastened to racks by means of the manufacturer's recommended fasteners.

3.2 TERMINATION

Cables and conductors shall sweep into termination areas; cables and conductors shall not bend at right angles. Manufacturer's minimum bending radius shall not be exceeded. When there are multiple system type drops to individual workstations, relative position for each system shall be maintained on each system termination block or patch panel.

3.2.1 Unshielded Twisted Pair Cable

Each pair shall be terminated on appropriate outlets, terminal blocks or patch panels. No cable shall be unterminated or contain unterminated elements. Pairs shall remain twisted together to within the proper distance from the termination as specified in EIA ANSI/TIA/EIA-568-A. Conductors shall not be damaged when removing insulation. Wire insulation shall not be damaged when removing outer jacket.

3.3 GROUNDING

Signal distribution system ground shall be installed in the telecommunications entrance facility and in each telecommunications closet in accordance with EIA ANSI/TIA/EIA-607 and Section 16415 ELECTRICAL WORK, INTERIOR. Equipment racks shall be connected to the electrical safety ground.

3.4 ADDITIONAL MATERIALS

The Contractor shall provide the following additional materials required for facility startup.

a. 10 of each type outlet.

b. 10 of each type cover plate.

c. 1 of each type terminal block for each telecommunications closet.

e. 1 Set of any and all special tools required to establish a cross connect and to change and/or maintain a terminal block.

3.5 ADMINISTRATION AND LABELING

3.5.1 Labeling

3.5.1.1 Labels

All labels shall be in accordance with EIA ANSI/TIA/EIA-606. See 16710-11

3.5.1.2 Cable

All cables will be labeled using color labels on both ends with identifiers per EIA ANSI/TIA/EIA-606.

3.5.1.3 Termination Hardware

All workstation outlets and patch panel connections will be labeled using color-coded labels with identifiers per EIA ANSI/TIA/EIA-606.

3.6 TESTING

Materials and documentation to be furnished under this specification are subject to inspections and tests. All components shall be terminated prior to testing. Equipment and systems will not be accepted until the required inspections and tests have been made, demonstrating that the signal distribution system conforms to the specified requirements, and that the required equipment, systems, and documentation have been provided.

3.6.1 Category 5 Circuits

All category 5 circuits shall be tested using a test set that meets the Class II accuracy requirements of EIA TSB 67 standard. Testing shall use the Basic Link Test procedure of EIA TSB 67. Cables which contain failed circuits shall be replaced and retested to verify the standard is met.

3.7 COMMUNICATION DRAWINGS

The Contractor shall comply with the communications standard details SK-1 through SK-4 shown on the following pages.

Standard Fort Lewis Multi-Media Communication outlet Labeling

CR = Communication room #. Label each multimedia box with CR# if more than one communication room is used on each floor.
All Data port numbering shall be sequential from jack to jack.
Both Voice jacks in each Multi Media box will use same number with A or B designation in each multimedia box.
Use pair 1 for A (White Blue pair) use pair 2 for B (white Orange pair) leave pair 3 & 4 un-terminated.
Room numbers change and are not to be a part of the numbering system.
D = Data
V = Voice

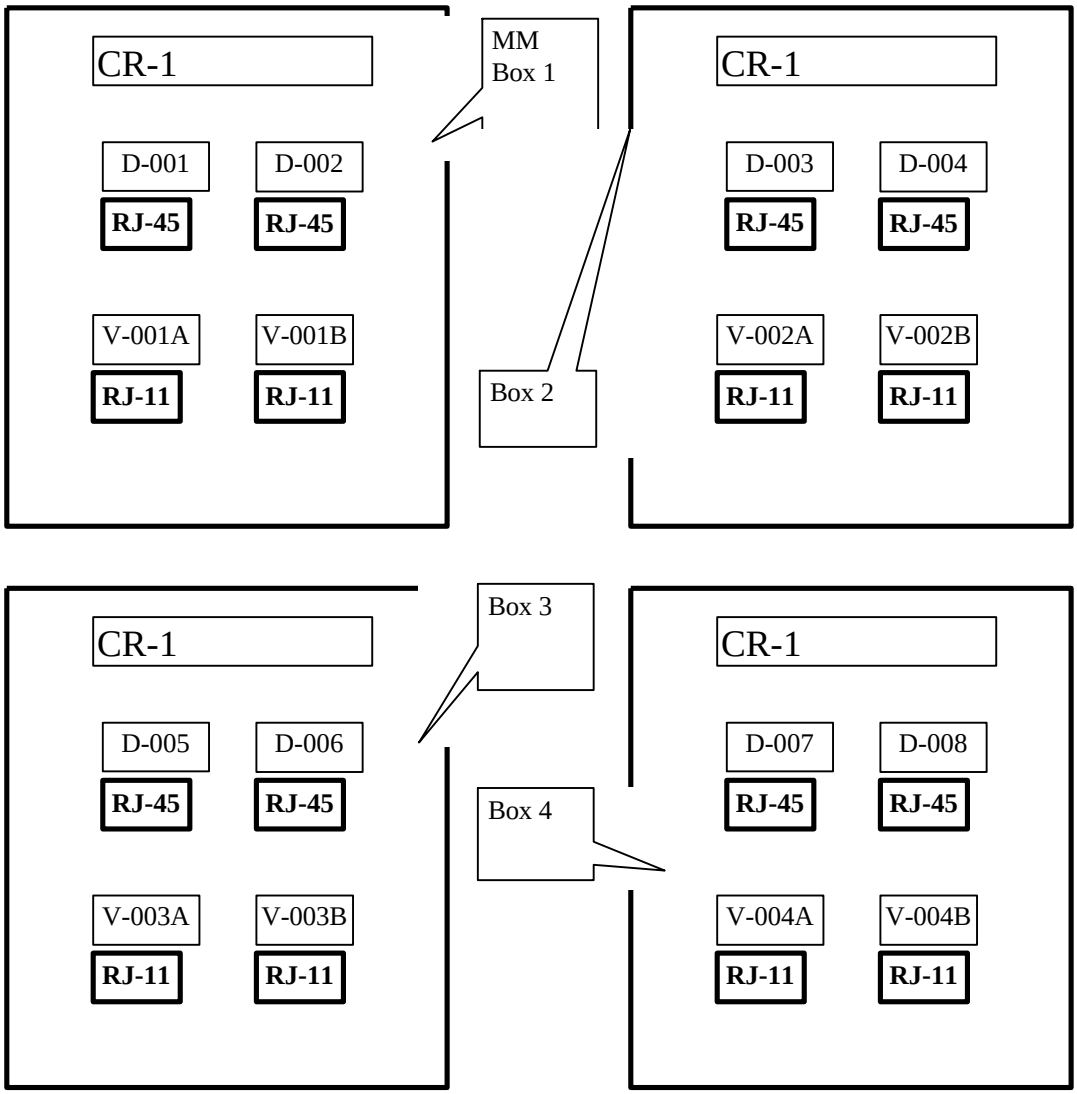

Floor Designation is not required unless outlet is wired to a communication room located on a different floor.
Communication room designation required if more than one-communication rooms exist on each floor.

Standard Fort Lewis Multi-Media Communication outlet

Two Category 5, 4 pair cables, wired to 110 type RJ-45 category 5 patch panels located in 19" equipment cabinet in the communication room.

Additional pull string required from each Multimedia box to wire-way or communication room if wire-ways are not used.

Category 5, 4 pair communication cables, wired to 66M1-50 punch blocks located on backboard in communication room.

1" EMT conduit with pull string to nearest Wire-way or communication room.

Single or Double Gang electrical wall box may be specified.

Top two Jacks: modular eight pin RJ-45, Category 5 rated Data jacks, Wired in compliance with EIA/TIA 568B. Blue or Red colored modules required.

Reducing ring to be used to reduce from double gang box to single gang faceplate when double gang box is required.

Must match faceplate in color and texture or be hidden in

Bottom two Jacks: Six pin RJ-11/14 voice grade jack wired to 66M1-50 blocks mounted on 1" Plywood Backboard in communication room.
Not EIA/TIA 568 or 569 compliant.
Pair 1 on left RJ-11. Pair 2 wires to Right RJ-11. Pairs 3 & 4 Coiled as spares in the outlet box.

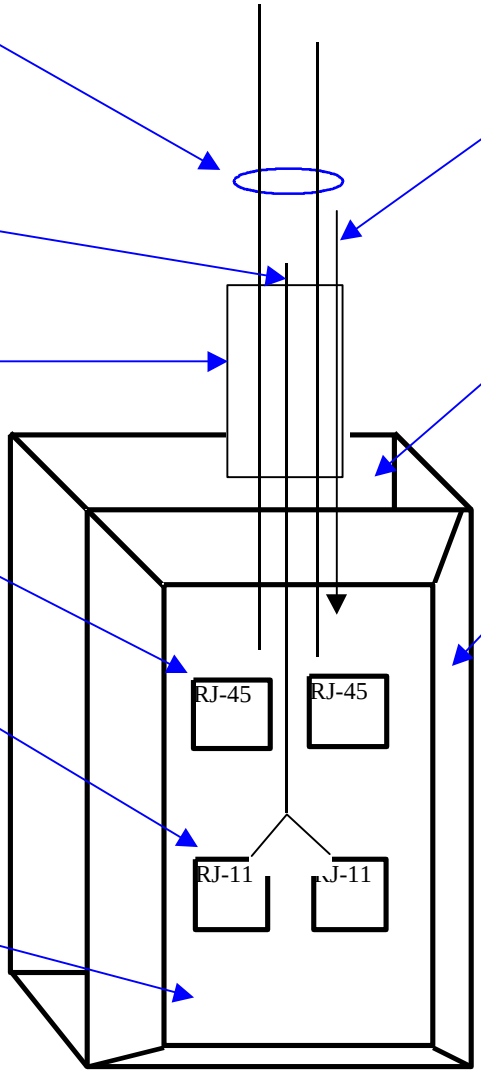

Individual modular jacks capable of being removed individually from the faceplate must be used for ease of servicing and individual replacement of damaged jacks.

Pre-wired faceplate or duel modules will not be accepted.

Quad Single gang modular communications faceplate installed on double gang electrical box with reducing ring shown.

Fort Lewis standard design requires two strands of single mode fiber optic installed to each outlet WHEN SPECIFIED.
If specified a six-position face plat will be required.
In the alternative providing large enough conduit complete with pull string where no current fiber optic requirement has been identified and funding is unavailable.

Fiber optic ST connectors. Would be placed in faceplate when specified.

Typical Fort Lewis communication room layout

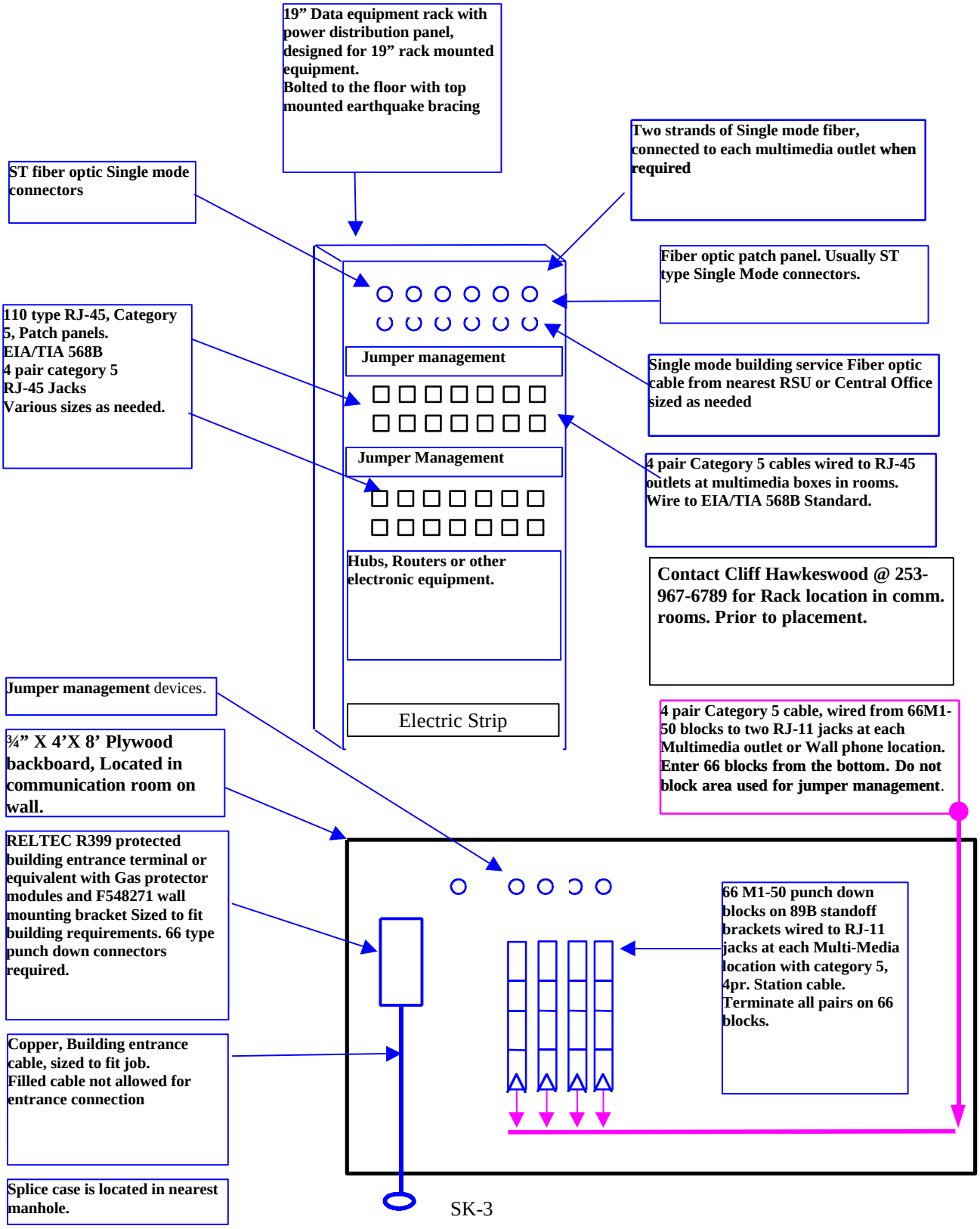

SK-3

Communication Room Typical layout

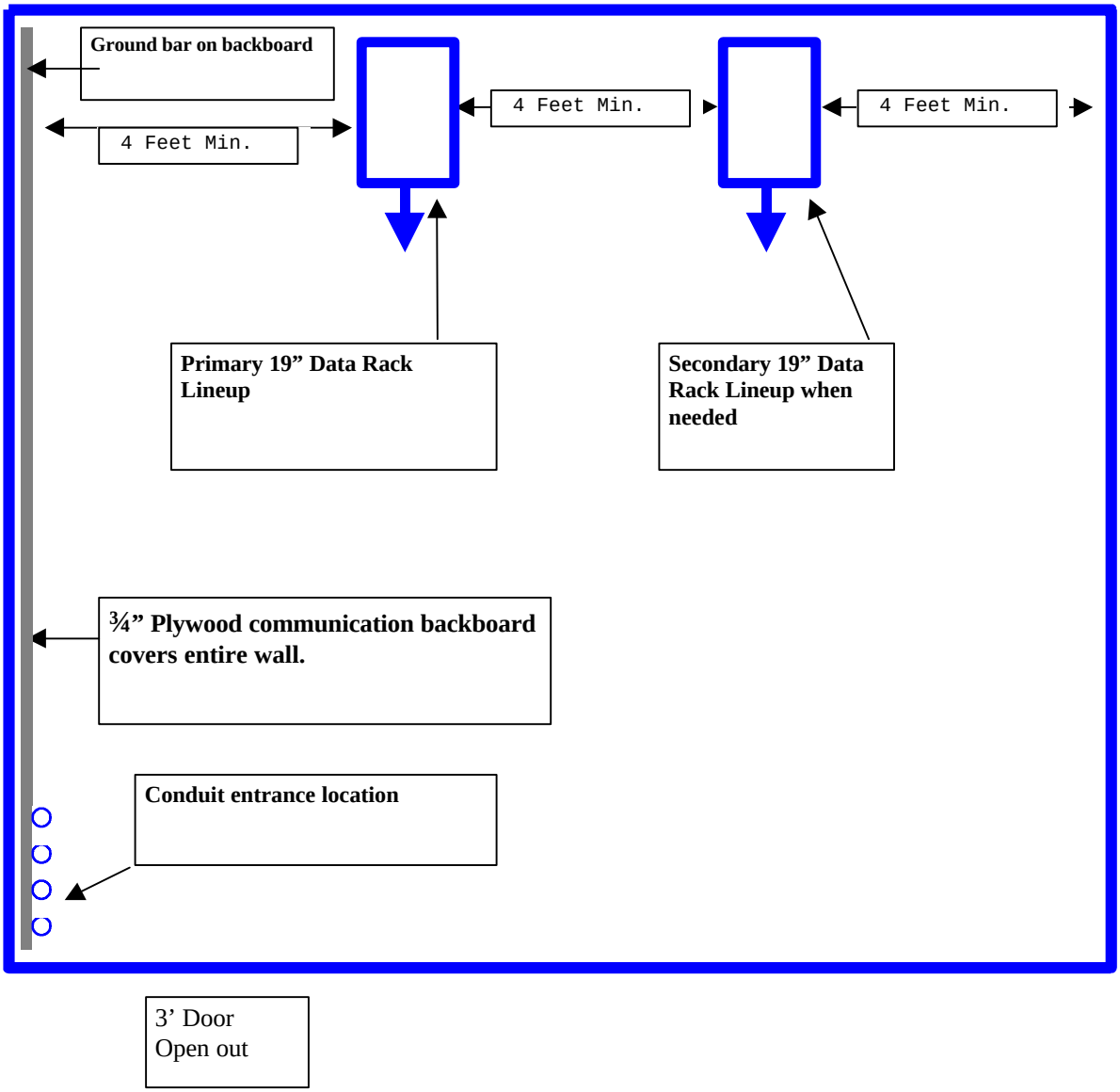

SK-4

END OF SECTION

SECTION 16711

TELEPHONE SYSTEM, OUTSIDE PLANT

PART 1 GENERAL

1.1 REFERENCES

The publications listed below form a part of this specification to the extent referenced. The publications are referred to in the text by basic designation only.

AMERICAN NATIONAL STANDARDS INSTITUTE (ANSI)

ANSI C62.61	(1993) Gas Tube Surge Arrestors on Wire Line Telephone Circuits

AMERICAN SOCIETY FOR TESTING AND MATERIALS (ASTM)

ASTM D 2239	(1996a) Polyethylene (PE) Plastic Pipe (SIDR-PR) Based on Controlled Inside Diameter

ELECTRONIC INDUSTRIES ASSOCIATION (EIA)

EIA ANSI/EIA-455-81A	(1992) FOTP-81 Compound Flow (Drip) Test for Filled Fiber Optic Cable
EIA ANSI/EIA/TIA-455-30B	(1991) FOTP-30 Frequency Domain Measurement of Multimode Optical Fiber
EIA ANSI/EIA/TIA-455-53A	(1990) FOTP-53 Attenuation by Substitution Measurement for Multimode Graded-Index Optical Fibers or Fiber Assemblies Used in Long Length Communications Systems
EIA ANSI/EIA/TIA-455-78A	(1990; R 1995) FOTP-78 Spectual Attenuation Cutback Measurement for Single Mode Optical Fibers
EIA ANSI/TIA/EIA-568A	(1995) Commercial Building Telecommunications Cabling Standard
EIA ANSI/TIA/EIA-607	(1994) Commercial Building Grounding and Bonding Requirements for Telecommunications

INSTITUTE OF ELECTRICAL AND ELECTRONICS ENGINEERS (IEEE)

IEEE C2	(1997) National Electrical Safety Code

INSULATED CABLE ENGINEERS ASSOCIATION (ICEA)

ICEA ANSI/ICEA S-85-625	(1996) Airecore, Polyolefin Insulated, Copper Conductor Telecommunications Cable

NATIONAL FIRE PROTECTION ASSOCIATION (NFPA)

NFPA 70	(1999; Errata 96-4) National Electrical Code

RURAL UTILITIES SERVICE (RUS)

RUS Bulletin 1753F-401(PC-2)	(1995) RUS Standard for Splicing Copper and Fiber Optic Cables
RUS Bulletin 1755.910	RUS Specification for Outside Plant Housings and Serving Area Interface Systems
RUS REA Bulletin 345-39	(1985) REA Specification for Telephone Station Protectors (PE-42)
RUS REA Bulletin 345-72	(1985) REA Specification for Filled Splice Closures (PE-74)
RUS REA Bulletin 345-90	(1986) Totally Filled Fiber Optic Cable (PE-90)
RUS REA Bulletin 345-151	(1989) Specifications and Drawings for Conduit and Manhole Construction (Form 515c)
RUS REA Bulletin 1751F-641	(1995) Construction of Buried Plant
RUS REA Bulletin 1755I-100	(1991; Rev through Supple 11 Nov 92) List of Materials Acceptable for Use on Telephone System of REA Telephone Borrowers
RUS REA PC-4	(1976) Acceptance Tests and Measurements of Telephone Plant
RUS REA PE-33	(1985) Shield Bonding Connectors
RUS REA PE-39	(1993) REA Specification for Filled Telephone Cables
RUS REA PE-60	(1979) Trunk Carrier Systems
RUS REA PE-87	(1994) Terminating (TIP) Cable
RUS REA PE-89	(1993) Filled Telephone Cables with Expanded Insulation
RUS REA TE&CM 635-03	(1988; Addenda 1 through 4) Construction of Aerial Cable Plant
RUS REA TE&CM 643-02	(1983) Underground Conduit and Manhole Design and Construction (Physical Plant)

UNDERWRITERS LABORATORIES (UL)

UL 50	(1995; Rev thru Oct 1997) Enclosures for Electrical Equipment

UL 497 (1995; Rev Mar 1996) Protectors for Paired Conductor Communication Circuits

1.2 SYSTEM DESCRIPTION

The outside plant system shall consist of all cable, conduit, manholes, poles, etc. required to provide signal paths from the closest point of presence to the new facility, including free standing frames or backboards, terminating cables, lightning and surge protection modules at the entry facility. The work consists of furnishing, installing, testing and making operational a complete outside plant system for continuous use. The Contractor shall coordinate all work with the 1115th Signal Command, also referred to as Directorate of Information Management (DOIM); Point of Contact is Cliff Hawkeswood, telephone 253-967-6789. There is no charge by the provider for this work.

a. The Contractor shall coordinate with the DOIM for confirmation and identification of existing cables to be spliced, and for splice pairs assignments. Contractor shall provide 7 days notification before performing any splice to an existing cable.

b. The Contractor shall coordinate with the DOIM for termination locations on main distribution frame of RSU building for outside plant cable.

c. The Contractor shall coordinate with the DOIM for final cable names.

d. The Contractor shall coordinate with the DOIM for Government furnished, Government installed instruments. Contractor shall provide supporting structures, wiring, and other equipment as indicated; and test before hand.

1.3 QUALIFICATIONS

1.3.1 Cable Installers

Installation shall be under the direct supervision of an individual with a minimum of 3 years experience in the installation of the specified copper and fiber optic cable and components.

1.3.2 Cable Splicing and Termination

All cable splicers shall have training in the proper techniques and have a minimum of 3 years experience in splicing and terminating the specified cables. Modular splices shall be performed by factory certified personnel or under direct supervision of factory trained personnel for products used.

1.3.3 Manufacturers

The cable, equipment, and hardware provided shall be from manufacturers that have a minimum of 3 years experience in producing the types of cable, equipment, and hardware specified.

1.4 SUBMITTALS

Government approval is required for submittals with a "GA" designation; submittals having an "FIO" designation are for information only. The following shall be submitted in accordance with Section 01330 SUBMITTAL PROCEDURES:

SD-01 Data

Spare Parts and Equipment List; FIO.

A data list of recommended spare parts, tools, and test equipment for each different item of material and equipment specified prior to beneficial occupancy. The data shall include a complete list of parts and supplies, with current unit prices and source of supply.

SD-04 Drawings

Telephone System; FIO.

Detail drawings, consisting of a complete list of equipment and material, including manufacturer's descriptive and technical literature, performance charts and curves, and catalog cuts. Detail drawings shall also contain complete configuration information, wiring diagrams and any other details required to demonstrate that the cable system has been coordinated to support the transmission systems identified in the specifications and drawings. Drawings shall show proposed layout and anchorage of equipment and appurtenances, and equipment relationship to other parts of the work including clearance for maintenance and operations.

Record Drawings; GA.

Record drawings for the installed wiring system showing the actual location of all cable terminations, splices, routing, and size and type of all cables. The identifier for each termination and cable shall appear on the drawings. The drawings shall include gauge and pair or fiber count for each cable, duct and innerduct arrangement, or conductor assignment of outside plant, and protector and connector block layout at the termination points after installation.

SD-06 Instructions

Installation; GA.

Printed copies of the manufacturer's recommendations for the material being installed, prior to installation. Installation of the item will not be allowed to proceed where installation procedures, or any part thereof, are required to be in accordance with those recommendations until the recommendations are received and approved.

SD-08 Statements

Acceptance Tests; GA.

Test plans defining all tests required to ensure that the system meets specified requirements. The test plans shall define milestones for the tests, equipment, personnel, facilities, and supplies required. The test plans shall identify the capabilities and functions to be tested.

Cutover and Records; GA.

The cutover plan shall provide procedures and schedules for relocation of facility station numbers without interrupting service to any active location.

SD-09 Reports

Acceptance Tests; FIO.

Test reports in booklet form showing all field tests performed, upon completion and testing of the installed system. Measurements shall be tabulated on a pair by pair or strand by strand basis.

SD-13 Certificates

Telephone System; GA.

Proof that the items furnished under this section conform to the specified requirements in FCC, ICEA, REA, RUS, ANSI, ASTM, NFPA, EIA, or UL, where materials and equipment are so specified.

Qualifications; GA.

Outside Plant Telephone Cable Installer Qualifications; GA

Experience; GA.

The Contractor shall employ a company specializing in the installation of outside plant telephone for the work indicated. The company shall have experience demonstrated by the construction of three projects of a similar magnitude within the past 5 years. The Contractor shall submit for approval a resume of the company including:

a. Experience list of similar projects, dollar amount, brief description, and point of contact for verification, including addresses and telephone numbers.

b. List of key personnel proposed to work on the contract, and percent time on contract.

c. Resumes of key personnel, demonstrating qualifications to perform indicated work.

d. Other relevant experience or capabilities.

Supervisor Qualifications; GA

The Contractor shall provide at least one onsite person in supervisory position with a documentable level of competency and experience to supervise all cable pulling, splicing, and related installation operations. A resume shall be provided showing the cable installer's experience in the last 3 years including a list of references complete with points of contact, addressees, and telephone numbers.

Cable Splicer Qualification; GA

A certification that contains the names and the qualifications of people recommended to perform the splicing and termination of telephone and fiber cables approved for installation under this contract. The certification shall indicate that any person recommended to perform actual splicing and terminations, has been adequately trained in the proper techniques and have had at least 3 recent years of experience in splicing and terminating the same or similar types of cables approved for installation. In addition, any person recommended by the Contractor may be required to perform a practice splice and termination, in the presence of the Contracting Officer, before being approved as a qualified installer of cables. If that additional requirement is imposed, the Contractor shall provide short

sections of the approved types of cables along with the approved type of splice and termination kits, and detailed manufacturer's instruction for the proper splicing and termination of the approved cable types.

1.5 DELIVERY AND STORAGE

1.5.1 Cable Requirements-

All cable shall be shipped on reels. The diameter of the drum shall be large enough to prevent damage to the cable during reeling and unreeling. The reels shall be constructed to prevent damage during shipment and handling. The outer end of the cable shall be securely fastened to the reel head to prevent the cable from becoming loose in transit. The inner end of the cable shall project into a slot in the side of the reel, or into a housing on the inner slot of the drum, with sufficient length to make it available for testing. The inner end shall be fastened to prevent the cable from becoming loose during installation. End seals shall be applied to each of the cables to prevent moisture from entering the cable. The reels with cable shall be suitable for outside storage conditions when the temperature ranges from minus 40 to plus 65 degrees C, (minus 40 to plus 148 degrees F), with relative humidity from 0 to 100 percent.

1.5.2 Equipment

All equipment shall be stored with protection from the weather, humidity and temperature variations, dirt and dust, or other contaminants, in accordance with the manufacturer's requirements.

PART 2 PRODUCTS

2.1 STANDARD PRODUCTS

Materials and equipment shall be the standard products of a manufacturer regularly engaged in the manufacture of such products and shall be the manufacturer's latest standard design that has been in satisfactory use for at least 2 years prior to bid opening. Each major component of equipment shall have the manufacturer's name and type identified on the equipment. All products supplied shall be specifically designed and manufactured for use with outside plant communications systems. All items of the same class of equipment shall be the products of a single manufacturer.

2.2 CABLE

2.2.1 Copper Conductor Cable

Copper conductor cable shall conform to the following:

2.2.1.1 Underground

Cable shall be manufactured per RUS REA PE-39 or RUS REA PE-89. A 0.2 mm (8 mil) coated aluminum or 0.12 mm (5 mil) copper metallic shield shall be provided.

2.2.1.4 Screened

Screened cable shall comply with RUS REA PE-39 or RUS REA PE-89.

2.2.2 Fiber Optic Cable

Reeled fiber optic cable shall be specifically designed for outside use, be filled or loose buffer construction, and conform to RUS REA Bulletin 345-90.

2.2.2.1 Cable Cores

A central, nonmetallic core member shall be included to serve as a cable core foundation to reduce strain on the fibers, but not to serve as a pulling strength member.

2.2.2.2 Optical Fiber

Single-mode optical fibers shall be Class IV.

2.2.2.3 Shielding or Other Metallic Covering

A copper, copper alloy, or copper and steel laminate metallic covering or shield shall be provided per RUS REA Bulletin 345-90.

2.2.2.4 Performance Requirements

The fiber optic cable shall comply with the specified mechanical performance requirements while used in buried and underground duct applications where the temperature varies from minus 20 to plus 60 degrees C. (minus 5 to plus 140 degrees F). Optical performance degradation shall be less than 5 percent of the optical performance requirements in the temperature range of minus 20 to plus 60 degrees C. (minus 5 to plus 140 degrees F). The fiber optic cable shall not be damaged in storage where the temperature may vary from minus 40 to plus 65 degrees C. (minus 40 to plus 148 degrees F).

2.3 CLOSURES

2.3.1 Copper Conductor Closures

2.3.1.1 Underground Closure

Underground closures shall conform to RUS REA Bulletin 345-72. The closure shall be of thermoplastic, thermoset, or stainless steel material and be suitable for use in a vault or manhole.

2.3.2 Fiber Optic Closures

2.3.2.1 Fiber Optic Underground

No underground splices shall be allowed. Contractor shall provide the specified fiber optic cable from Building 12570 to the building communication room in one continuous unspliced length. The underground closure shall be suitable to house a splice organizer in a protective housing. The closure shall be of thermo-plastic, thermoset-plastic, or stainless steel material and suitable for use in a vault or manhole. Splice cases shall form an airtight seal without the use of encapsulating compounds. Encapsulating compounds may not be used. All splice cases will be "Flash Tested" after installation.

2.4 CABLE SPLICES AND ORGANIZERS

2.4.1 Copper Cable Splices

All cables greater than 25 pairs shall be spliced using modular splicing connectors, which accommodate 25 pairs of conductors at a time. The correct connector size shall be used to accommodate the wire gauge of the cable to be spliced. The connectors used shall be listed in RUS REA Bulletin 1755I-100.

2.4.2 Fiber Optic Cable Splices

Each fiber optic splice shall be physically protected by a splice kit. The kit shall be specially designed for the splice.

2.4.3 Fiber Optic Splice Organizer

The splice organizer shall be suitable for housing fiber optic splices in a neat and orderly fashion. The splice organizer shall allow for a minimum of 1 m (3 feet) of fiber for each fiber within the cable to be neatly stored without kinks or twists. The splice organizer shall accommodate individual strain relief for each splice. The splice organizer shall allow for future maintenance or modification, without damage to the cable or splices. All required splice organizer hardware, such as splice trays, protective glass shelves, and shield bond connectors shall be provided in the organizer kit.

2.5 CABLE TERMINALS

2.5.1 Pedestal-Type Cable Terminals

Pedestal-type cable terminals shall conform to RUS Bulletin 1755.910.

2.5.2 Cross-connect Cable Terminals

Cross-connect cable terminals shall be weatherproofed for outdoor use and suitable for pole, pad, or stake mounting. The terminal shall be equipped with mounting columns and distribution rings for jumper-wire routing. The terminal shall be of aluminum or steel construction and ribbed for strength.

2.6 MANHOLE AND DUCT

All manhole and duct products shall conform to RUS REA TE&CM 643-02.

2.6.1 New Manholes

New manholes shall be equipped with pulling-in irons, cable racks, and ground rod, and conform to the requirements of RUS REA Bulletin 345-151. Manholes shall be a minimum of 3.7 m long by 1.8 m wide by 2.0 m high (12 feet long by 6 feet wide by 6.5 feet high). Manholes shall be designed so that the main trunk conduits enter and exit in lower most portals of the ends, and lateral conduits exit on the sides near the corners. Telephone manholes shall be in accordance with details 612-7-TCA, as shown on the drawings. Although these details represent the products of Utility Vault Company, products of other manufacturers are acceptable if of similar design. All manholes must be fully equipped with racking, standoff arms, and ladder. Manholes shall be buried 36inches below finished grade with riser rings and ring and collar assembly for a 30-inch manhole lid.

2.6.2 Manhole Overbuilds

Existing manholes which are enlarged as part of this project shall be equipped with new pulling-in irons, cable racks, and ground rod.

2.6.3 Duct/Conduit

Conduit shall be furnished as specified in Sections 16415 ELECTRICAL WORK, INTERIOR and 16375 ELECTRICAL DISTRIBUTION SYSTEM, UNDERGROUND and as shown on project drawings.

2.6.4 Innerduct

Innerduct shall be SIDR 11.5 polyethylene plastic pipe conforming to ASTM D 2239.

2.7 EQUIPMENT RACKS

Distribution frames, cabinets, and back-boards shall be provided as shown and designed to mount connector blocks, protector blocks, cross connects, and other hardware required to terminate and protect the outside telephone plant cable; to provide a demarcation point between inside and outside plant cable; and to allow inside and outside plant cable to be cross connected.

2.7.1 Floor Mounted Open Frame

Floor mounted equipment racks shall be double sided welded steel relay racks with uprights to mount equipment 480 mm (19 inches) wide. Uprights shall be 75 mm (3 inch) deep channel, 32 mm (1-1/4 inch) wide, drilled and tapped 12-24 in a 13 mm (1/2 inch) pattern. Racks shall be provided with a standard top cross-member, and predrilled base plate to allow floor fastening. Open frame equipment racks shall be 2.1 m (7 feet) in height and painted. AC outlets shall be provided as shown. Earthquake bracing is required on all racks installed.

2.7.2 Cable Guides

Cable guides shall be specifically manufactured for the purpose of routing cables, wires and patch cords horizontally and vertically on 480 mm (19 inch) equipment racks. Cable guides shall consist of ring or bracket-like devices mounted on rack panels for horizontal use or individually mounted for vertical use. Cable guides shall mount to racks by screws and/or nuts and lock-washers.

2.7.3 Equipment Mounting Backboard

Backboards shall be 19 mm (3/4 inch) AC plywood, sized as shown, painted with white or light colored paint and shall cover entire wall designated for backboard.

2.8 CONNECTOR BLOCKS

Connector blocks consisting of flame-retardant molded plastic fastened to a metal mounting bar shall be provided to terminate the outside plant cable as shown. The connector blocks shall be of 100-pair block size and equipped with gas protection modules. The connector blocks shall be 24 gauge stub type. The cable stubs shall be 100 pair and conform to RUS REA PE-87.

2.9 PROTECTOR MODULES

The protector modules shall be of the two-element gas tube type. Protection modules shall be heavy duty, A>10 kA, B>400, C>65A where A is the maximum single impulse discharge current, B is the impulse life and C is the AC discharge current per ANSI C62.61. The gas modules shall shunt high voltage to ground, fail short, be equipped with an external spark gap and heat coils, and shall comply with UL 497.

2.10 FIBER-OPTIC TERMINATIONS

2.10.1 Fiber Optic Connectors

All outside plant fiber strands shall be terminated in a ST type fiber optic connector, with ceramic ferrule material and a maximum insertion loss of 0.5 dB. Connectors shall meet performance standards of EIA ANSI/TIA/EIA-568A. If pre-connectorized cable assemblies or pigtails are used, the connectors shall be terminated on a 3 m (10 foot) length of single-fiber cable. The single-fiber cable shall contain a buffered optical fiber of the same type and specification as that used in the multi-fiber cable.

2.10.2 Fiber Optic Patch Panels

Patch panels shall be a complete system of components by a single manufacturer, and shall provide termination, splice storage, routing, radius limiting, cable fastening, storage, and cross-connection. Patch panels shall be 480 mm (19 inch) rack mounted panels. Patch panels shall provide strain relief for cables. Panels shall be provided with labeling space. Patch panel connectors and couplers shall be the same type and configuration as used elsewhere in the system.

2.11 MISCELLANEOUS ITEMS

2.11.1 Shield Connectors

Shield connectors shall make a stable, low-impedance electrical connection between the shield of the communications cable and a conductor such as a strap, bar, or wire. The connector shall be made of tin-plated tempered brass. Shield bond connectors shall comply with RUS REA PE-33.

2.11.2 Grounding Braid

Grounding braid shall provide low electrical impedance connections for dependable shield bonding. The braid shall be made from flat tin-plated copper.

2.11.3 Warning Tape

Marking and locating tape shall be acid and alkali resistant polyethylene film, 150 mm (6 inches) wide with a minimum strength of 12.1 MPa (1750 psi) lengthwise and 10.3 MPa (1500 psi) crosswise. The tape shall be manufactured with integral wires, foil backing, or other means to enable detection by a metal detector when the tape is buried up to 1 m (3 feet) deep. The metallic core shall be encased in a protective jacket or provided with other means to protect it from corrosion and shall be specifically manufactured for marking and locating underground utilities. The warning tape shall be orange in color and continuously imprinted with the words "WARNING - COMMUNICATIONS CABLE BELOW" at not more than 1.2 m (48 inch) intervals. Warning tape will continue through/over manholes to insure continuous electrical connectivity throughout the project.

2.11.4 Cable Warning Signs

Cable warning signs, which identify the route of buried cable, shall be stake mounted. The stake shall be driven into undisturbed soil and the sign shall be mounted to the stake in accordance with the manufacturer's instructions. Warning signs shall be placed at intervals of no more than 152.5 m (500 feet) and at each change of direction in the cable route. Warning signs shall also be placed on each side of every crossing of surface obstacles such as roads, railroads, stream crossings, or any similar crossing where excavation is likely to occur.

PART 3 EXECUTION

3.1 INSTALLATION

All system components and appurtenances shall be installed in accordance with the manufacturer's instructions and as shown. All installation work shall be done in accordance with the safety requirements set forth in the general requirements of IEEE C2 and NFPA 70.

3.1.1 Testing Existing Telephone Cables

Prior to start of this project, the Contractor shall test all pairs in the cable to be spliced into under this project. The Contractor shall prepare a list of the defective cable pairs under form "Cable Status Certificate" attached at the end of this section. This list will be known as the original list. After project is completed, all pairs shall be tested. The Contractor shall clear trouble on any pairs that were not defective on the original list.

3.1.2 Cable Inspection and Repair

All cable and wire used in the construction of the project shall be handled with care. Each reel shall be inspected for cuts, nicks or other damage. All damage shall be repaired to the satisfaction of the Contracting Officer. The reel wrap shall remain intact on the reel until the cable or wire is ready to be placed.

3.1.3 Underground Cable

Underground cable installation shall be accomplished in accordance with the requirements set forth in RUS REA Bulletin 1751F-641.

3.1.3.1 Cable Pulling

For cable installed in ducts and conduit, a cable feeder guide shall be used, between the cable reel and the face of the duct and conduit, to protect the cable and guide it into the duct and conduit as it is paid off the reel. As the cable is paid off the reel, it shall be inspected for jacket defects. Precautions shall be taken during installation to prevent the cable from being kinked or crushed. A pulling eye shall be attached to the cable and used to pull the cable through the duct and conduit system. Cable shall be hand fed and guided through each manhole. As the cable is paid off the reel into the cable feeder guide, it shall be sufficiently lubricated with a type of lubricant recommended by the cable manufacturer. Where the cable is pulled through a manhole, additional lubricant shall be applied at all intermediate manholes. Dynamometers or load-tension instruments shall be used to ensure that the pulling line tension does not exceed the installation tension value specified by the cable manufacturer.

The mechanical stress placed upon a cable during installation shall not cause the cable to be twisted or stretched.

3.1.3.2 Penetrations for Cable Access

Penetrations in walls, ceilings or other parts of the building, made to provide for cable access, shall be caulked and sealed. Where conduits and ducts pass through fire walls, fire partitions, above grade floors, and fire rated chase walls, the penetration shall be sealed with fire stopping materials as specified in section 07270 FIRE STOPPING. Fire stopped penetrations shall not compromise the fire rating of the walls or floors. All underground building entries shall be through waterproof facilities.

3.1.3.3 Cable Bends

Telephone cable bends shall have a radius of not less than 10 times the cable diameter. Only large radius sweeps shall be used in conduit runs and shall not exceed a cumulative 90 degrees between manholes.

3.1.4 Manhole and Ducts

Manhole and duct systems shall be installed in accordance with Section 16375 ELECTRICAL DISTRIBUTION SYSTEM, UNDERGROUND. Manholes shall be placed in line with the main duct. Splice cases shall be mounted in the center on the long sides. Lateral conduits shall exit the long sides near the corners. Conduit shall enter the manholes in the lowest available manhole portals.

3.1.5.1 Innerduct Installation

Innerduct shall be pulled through existing duct-manhole system in continuous sections. Splices, joints, couplings, or connections of any type will not be allowed between manholes. Innerduct shall be plugged at both ends with polyurethane foam duct seal; this material shall also be inserted between the innerduct and the duct if cables are placed in the innerducts. Only one cable shall be installed in a given innerduct. Existing and new unoccupied innerducts shall be trimmed leaving 50 mm (2 inches) exposed.

3.1.5.2 Pull Cord

Pull cords of 10 mm (3/8 inch) polypropylene shall be installed in all unused ducts and inner-ducts with a minimum of 610 mm (2 feet) spare cord protruding from each end.

3.1.6 Surge Protection

Except for fiber optic cable, all cables and conductors, which serve as communication lines, shall have surge protection meeting the requirements of RUS REA PE-60 installed at the entry facility.

3.2 SPLICING

3.2.1 Copper Conductor Splices

Copper conductor cable splicing shall be accomplished in accordance with RUS Bulletin 1753F-401(PC-2). Modular splicing shall be used on all cables larger than 25 pairs.

3.2.2 Fiber Optic Splices

Fiber optic splicing shall be in accordance with the manufacturer's recommendation; each splice shall have a loss of less than 0.1 dB.

3.3 GROUNDING

Except where specifically indicated otherwise, all exposed non-current carrying metallic parts of telephone equipment, cable sheaths, cable splices, and terminals shall be grounded. Grounding shall be in accordance with requirements of NFPA 70, Articles 800-33 and 800-40.

3.3.1 Ground Bars

3.3.1.1 Telecommunications Master Ground Bar (TMGB)

A copper TMGB shall be provided, in accordance with EIA ANSI/TIA/EIA-607, to be the hub of the basic grounding system by providing a common point of connection for ground from outside cable, MDF, and equipment. The TMGB shall have a ground resistance, including ground, of 10 ohms or less.

3.3.1.2 Telecommunications Ground Bar (TGB)

Copper TGB shall be provided in accordance with EIA ANSI/TIA/EIA-607 in each communications closet and room and each frame. The TGB shall be connected to the TMGB in accordance with EIA ANSI/TIA/EIA-607. Each TGB shall be connected to the TMGB by the most direct route utilizing a copper wire conductor with a total resistance of less than 0.01 ohms.

3.3.2 Incoming Outside Plant Cables

All incoming outside plant cable shields shall be bonded directly to the TMGB or the closest TGB.

3.3.3 Cable Stubs

All shields of cable stubs shall be bonded to a TGB located on the frame.

3.3.4 Shields

The shields of all incoming cables shall not be bonded across the splice to the cable stubs.

3.3.5 Protection Assemblies

The protector assemblies shall be mounted directly on the vertical frame ironwork. The assemblies mounted on each vertical frame shall be connected with a No. 6 AWG copper conductor to provide a low resistance path to the TGB.

3.3.6 Manholes

The shields of all cables in each manhole shall be bonded together by a bonding wire or ribbon. At intermediate manholes, where the cable is pulled through without a sheath opening, bonds are not required. If the manhole has a lacerating bonding ribbon, the shields of spliced cables shall be attached to it.

3.4 CUTOVER AND RECORDS

The Contractor shall accomplish all necessary transfers and cutovers.

3.5 ACCEPTANCE TESTS

The Contractor shall provide all personnel, equipment, instrumentation, and supplies necessary to perform all required testing. Notification of any planned testing shall be given to the Contracting Officer at least 14 days prior to any test; testing shall not proceed until after the Contractor has received written Contracting Officer's approval of the test plans as specified. The test plans shall define all the tests required to ensure that the system meets technical, operational, and performance specifications. The test plans shall define milestones for the tests, equipment, personnel, facilities, and supplies required. The test plans shall identify the capabilities and functions to be tested.

3.5.1 Copper Conductor Cable

The following acceptance tests shall be performed in accordance with RUS REA PC-4:

a. Shield continuity.

b. Conductor continuity.

c. Conductor insulation resistance.

d. Structural return loss.

e. Cable insertion loss and loss margin at carrier frequencies.

f. Shield ground for single jacketed cables.

g. DC loop resistance.

3.5.2 Fiber Optic Cable

Two optical tests shall be performed on all optical fibers: Optical Time Domain Reflectometry (OTDR) Test, and Attenuation Test. In addition, a Bandwidth Test shall be performed on all multi-mode optical fibers. These tests shall be performed on the completed end-to-end spans which include the near-end pre-connectorized single fiber cable assembly, outside plant as specified, and the far-end pre-connectorized single fiber cable assembly.

3.5.2.1 OTDR Test

The OTDR test shall be used to determine the adequacy of the cable installations by showing any irregularities, such as discontinuities, micro-bendings, improper splices, for the cable span under test. Hard copy fiber signature records shall be obtained from the OTDR for each fiber in each span and shall be included in the test results. The OTDR test shall be measured in both directions. A reference length of fiber, 1 km 3280 feetminimum, used as the delay line shall be placed before the new end connector and after the far end patch panel connectors for inspection of connector signature. The OTDR test shall be conducted in accordance with EIA ANSI/EIA-455-81A for single-mode fiber and EIA ANSI/EIA/TIA-455-78A for multi-mode fiber. Splice losses shall not exceed 0.1db. Attenuation

losses shall not exceed 0.5 db/km at 1310 nm and 1550 nm for single-mode fiber. Attenuation losses shall not exceed 5.0 db/km at 850 nm and 1.5 db/km at 1300 nm for multi-mode fiber.

3.5.2.2 Attenuation Test

End-to-end attenuation measurements shall be made on all fibers, in both directions, using a 1300 nanometer light source at one end and the optical power meter on the other end to verify that the cable system attenuation requirements are met. The measurement method shall be in accordance with EIA ANSI/EIA/TIA-455-53A.

3.5.2.3 Bandwidth Test

The end-to-end bandwidth of all multi-mode fiber span links shall be measured by the frequency domain method. The bandwidth shall be measured in both directions on all fibers. The bandwidth measurements shall be in accordance with EIA ANSI/EIA/TIA-455-30B.

CABLE STATUS CERTIFICATE

PROJECT NUMBER OR TITLE: _____ DATE: _____

SHEET OF

PROJECT LOCATION: _____ CABLE NUMBER: _____

CERTIFICATION

The following cable pairs, designated "C", are certified to be trouble-free. Defective pairs, so designated as to their condition, are accepted by the facility in their present state and shall be spliced through in the same manner as non-defective pairs.

CONTRACTING OFFICER: _____ DATE: _____

PAIR	STATUS	PAIR	STATUS	PAIR	STATUS	PAIR	STATUS
1		26		51		76	
2		27		52		77	
3		28		53		78	
4		29		54		79	
5		30		55		80	
6		31		56		81	
7		32		57		82	
8		33		58		83	
9		34		59		84	
10		35		60		85	
11		36		61		86	
12		37		62		87	
13		38		63		88	
14		39		64		89	
15		40		65		90	
16		41		66		91	
17		42		67		92	
18		43		68		93	
19		44		69		94	
20		45		70		95	
21		46		71		96	
22		47		72		97	
23		48		73		98	
24		49		74		99	
25		50		75		100	

END OF SECTION

SECTION 16751

CLOSED CIRCUIT TELEVISION SYSTEMS

PART 1 GENERAL

1.1 REFERENCES

The publications listed below form a part of this specification to the extent referenced. The publications are referred to in the text by basic designation only.

CODE OF FEDERAL REGULATIONS (CFR)

47 CFR 15	Radio Frequency Devices

DEPARTMENT OF DEFENSE (DOD)

DOD 3235.1	(Rev H) Test & Evaluation of System Reliability, Availability and Maintainability - A Primer

ELECTRONIC INDUSTRIES ASSOCIATION (EIA)

EIA 170	(1957) Electrical Performance Standards - Monochrome Television Studio Facilities
EIA ANSI/EIA/TIA-232-F	(1997) Interface Between Data Terminal Equipment and Data Circuit-Terminating Equipment Employing Serial Binary Data Interchange
EIA ANSI/EIA-310-D	(1992) Cabinets, Racks, Panels, and Associated Equipment
EIA ANSI/EIA-330	(1968) Electrical Performance Standards for Closed Circuit Television Camera 525/60 Interlaced 2:1
EIA ANSI/EIA-375-A-1976	(1974) Electrical Performance Standards for Direct View Monochrome Closed Circuit Television Monitors 525/60 Interlaced 2:1

INSTITUTE OF ELECTRICAL AND ELECTRONICS ENGINEERS (IEEE)

IEEE C2	(1997) National Electrical Safety Code
IEEE C62.41	(1991; Rev 1995) Surge Voltages in Low-Voltage AC Power Circuits
IEEE Std 142	(1991) IEEE Recommended Practice for Grounding of Industrial and Commercial Power Systems

NATIONAL ELECTRICAL MANUFACTURERS ASSOCIATION (NEMA)

NEMA 250	(1991) Enclosures for Electrical Equipment (1000 Volts Maximum)

NATIONAL FIRE PROTECTION ASSOCIATION (NFPA)

NFPA 70	(1999) National Electrical Code

UNDERWRITERS LABORATORIES (UL)

UL 6	(1997) Rigid Metal Conduit
UL 1410	(1997) Television Receivers and High-Voltage Video Products

1.2 SYSTEM DESCRIPTION

1.2.1 General

The Contractor shall configure the system as described and shown. All television equipment shall conform to EIA 170 specifications or current industry practices if using a digital video system. The system shall include all connectors, adapters, and terminators necessary to interconnect all equipment. The Contractor shall also supply all cabling necessary to interconnect the closed circuit television (CCTV) equipment.

1.2.2 System Overall Reliability Requirement

The system, including all components and appurtenances, shall be configured and installed to yield a mean time between failure (MTBF) of at least 5000 hours, and shall be calculated based on the configuration specified in paragraph "System Overall Reliability Calculations."

1.2.3 Power Line Surge Protection

All equipment connected to AC power shall be protected from surges. Equipment protection shall withstand surge test waveforms described in IEEE C62.41. Fuses shall not be used for surge protection.

1.2.4 Video and Sync Signal Transmission Line Surge Protection

All cable, except fiber optic cable, used for sync or video signal transmission shall include protective devices to safeguard the CCTV equipment against surges. The surge suppression device shall not attenuate or reduce the video or sync signal under normal conditions. The surge suppression device shall be capable of dissipating not less than 1500 watts for 1 millisecond, and the response time from zero volts to clamping shall not be greater than 5 nanoseconds. Fuses shall not be used for surge protection.

1.2.5 Control Line Surge Protection

All coaxial cables which serve as communication, control, or signal lines shall be protected against surges and shall have surge protection installed at each end. Protection shall be furnished at the equipment and additional triple electrode gas surge protectors rated for the application on each wireline

circuit shall be installed within 1 m (3 feet) of the building cable entrance. Fuses shall not be used for surge protection. The inputs and outputs shall be tested in both normal mode and common mode using the following waveforms:

a. A 10 microsecond rise time by 1000 microsecond pulse width waveform with a peak voltage of 1500 volts and a peak current of 60 amperes.

b. An 8 microsecond rise time by 20 microsecond pulse width waveform with a peak voltage of 1000 volts and a peak current of 500 amperes.

1.2.6 Power Line Conditioners

A power line conditioner shall be furnished for the CCTV. The power line conditioner shall be of the ferroresonant design, with no moving parts and no tap switching, while electrically isolating the secondary from the power line side. The power line conditioner shall be sized for 125 percent of the actual connected kVA load. Characteristics of the power line conditioner shall be as follows:

a. At 85 percent load, the output voltage shall not deviate by more than plus or minus 1 percent of nominal when the input voltage fluctuates between minus 20 percent to plus 10 percent of nominal.

b. During load changes of zero to full load, the output voltage shall not deviate by more than plus or minus 3 percent of nominal. Full correction of load switching disturbances shall be accomplished within 5 cycles, and 95 percent correction shall be accomplished within 2 cycles of the onset of the disturbance.

c. Total harmonic distortion shall not exceed 3-1/2 percent at full load.

1.2.8 Environmental Conditions

1.2.8.1 Field Equipment

The cameras and all other field equipment shall be rated for continuous operation under ambient environmental conditions of minus 10.0 degrees C to 32.2 degrees C (14 degrees to 90 degrees F) using no auxiliary heating or cooling equipment. Equipment shall be rated for continuous operation under the ambient environmental temperature and humidity conditions specified or encountered for the installed location.

1.2.8.2 Monitoring Station Equipment

Monitoring station equipment shall, unless designated otherwise, be rated for continuous operation under ambient environmental conditions of 15.6 degrees C to 29.4 degrees C (60 degrees F to 85 degrees F) and a relative humidity of 20 to 80 percent.

1.2.9 Electrical Requirements

Electrically powered equipment shall operate on 120 volt 60 Hz AC sources as shown. Equipment shall be able to tolerate variations in the voltage source of plus or minus 10 percent, and variations in the line frequency of plus or minus 2 percent with no degradation of performance.

1.3 DELIVERY OF TECHNICAL DATA AND COMPUTER SOFTWARE

All items of computer software and technical data (including technical data which relates to computer software), which are specifically identified in this specification shall be delivered strictly in accordance with the CONTRACT CLAUSES, SPECIAL CONTRACT REQUIREMENTS, Section 01330 SUBMITTAL PROCEDURES, and in accordance with the Contract Data Requirements List (CDRL), DD Form 1423, which is attached to and thereby made a part of this contract. All data delivered shall be identified by reference to the particular specification paragraph against which it is furnished.

1.3.1 Group I Technical Data Package

1.3.1.1 System Drawings

The data package shall include the following:

a. System block diagram.

b. CCTV system console installation, block diagrams, and wiring diagrams.

c. Monitoring station installation, interconnection to equipment including block diagrams and wiring diagrams.

d. Camera wiring and installation drawings.

e. Pan/tilt mount wiring and installation drawings.

f. Interconnection with video signal transmission system, block diagrams and wiring diagrams.

g. Surge protection device installation.

1.3.1.2 Manufacturers' Data

The data package shall include manufacturers' data for all materials and equipment and security center equipment provided under this specification.

1.3.1.3 System Description and Analyses

The data package shall include complete system descriptions, analyses and calculations used in sizing the equipment required by these specifications. Descriptions and calculations shall show how the equipment will operate as a system to meet the performance of this specification. The data package shall include the following:

a. Switcher matrix size.

b. Camera call-up response time.

c. System start up and shutdown operations.

d. Switcher programming instructions.

e. Switcher operating and maintenance instructions.

f. Manuals for CCTV equipment.

1.3.1.4 Software Data

The data package shall consist of descriptions of the operation and capability of system and application software as specified.

1.3.1.5 Overall System Reliability Calculations

The data package shall include all manufacturer's reliability data and calculations required to show compliance with the specified reliability. The reliability data shall be prepared using DOD 3235.1 as a guide. The calculations shall be based on all CCTV equipment associated with one camera circuit and the console CCTV equipment, excluding the data transmission media (DTM).

1.3.1.6 Certifications

All specified manufacturer's certifications shall be included with the data package.

1.3.2 Group II Technical Data Package

The Contractor shall verify that site conditions are in agreement with the design package. The Contractor shall submit a report to the Government documenting changes to the site, or conditions that affect performance of the system to be installed. For those changes or conditions which affect system installation or performance, provide (with the report) specification sheets, or written functional requirements to support the findings, and a cost estimate to correct the deficiency. The Contractor shall not correct any deficiency without written permission from the Government.

1.3.3 Group III Technical Data Package

The Contractor shall prepare test procedures and reports for the predelivery test. The Contractor shall deliver the predelivery test procedures to the Government for approval. After receipt by the Contractor of written approval of the predelivery test procedures, the Contractor may schedule the predelivery test. The final predelivery test report shall be delivered after completion of the predelivery test.

1.3.4 Group IV Technical Data Package

The Contractor shall prepare test procedures and reports for the performance verification test and the endurance test. The Contractor shall deliver the performance verification test and endurance test procedures to the Government for approval. After receipt by the Contractor of written approval of the test procedures, the Contractor may schedule the tests. The contractor shall provide a report detailing the results of the field test and a video tape as specified in paragraph "Contractor's Field Testing." The final performance verification and endurance test report shall be delivered after completion of the tests.

1.3.4.1 Operation and Maintenance Manuals

A draft copy of the operation and maintenance manuals, as specified for the Group V technical data package, shall be delivered to the Government prior to beginning the performance verification test for use during site testing.

1.3.4.2 Training Documentation

Lesson plans and training manuals for the training phases, including type of training to be provided with a sample training report, and a list of reference material, shall be delivered for approval.

1.3.4.3 Data Entry

The Contractor shall enter all data needed to make the system operational. The Contractor shall deliver the data to the Government on data entry forms, utilizing data from the contract documents, Contractor's field surveys, and all other pertinent information in the Contractor's possession required for complete installation of the database. The Contractor shall identify and request from the Government, any additional data needed to provide a complete and operational CCTV system. The completed forms shall be delivered to the Government for review and approval at least 90 days prior to the Contractor's scheduled need date.

1.3.4.4 Graphics

Where graphics are required and are to be delivered with the system, the Contractor shall create and install all graphics needed to make the system operational. Graphics shall have sufficient level of detail for the system operator to assess the alarm. The Contractor shall supply hard copy, color examples at least 203.2 by 254.0 mm (8 by 10 inches) in size, of each type of graphic to be used for the completed CCTV system. If the video switcher does not use a monitor for display of system information, the Contractor shall provide examples of the video annotation used for camera identification. The graphics examples shall be delivered to the Government for review and approval at least 90 days prior to the Contractor's scheduled need date.

1.3.5 Group V Technical Data Package

Final copies of the manuals as specified bound in hardback, loose-leaf binders, shall be delivered to the Government within 30 days after completing the endurance test. The draft copy used during site testing shall be updated with any changes required prior to final delivery of the manuals. Each manual's contents shall be identified on the cover. The manual shall include names, addresses, and telephone numbers of each subcontractor installing equipment and systems, and nearest service representatives for each item of equipment for each system. The manuals shall have a table of contents and tab sheets. Tab sheets shall be placed at the beginning of each chapter or section and at the beginning of each appendix. The final copies delivered after completion of the endurance test shall include all modifications made during installation, checkout, and acceptance. The number of copies of each manual to be delivered shall be as specified on DD Form 1423.

1.3.5.1 Functional Design Manual

The functional design manual shall identify the operational requirements for the system and explain the theory of operation, design philosophy, and specific functions. A description of hardware and software functions, interfaces, and requirements shall be included for all system operating modes.

1.3.5.2 Hardware Manual

A manual shall describe all equipment furnished, including:

a. General hardware description and specifications.

b. Installation and checkout procedures.

c. Equipment electrical schematics and layout drawings.

d. System schematics and wiring lists.

e. System setup procedures.

f. Manufacturer's repair parts list indicating sources of supply.

g. Interface definition.

1.3.5.3 Software Manual

The software manual shall describe the functions of all software, and shall include all other information necessary to enable proper loading, testing and operation, including:

a. Definitions of terms and functions.

b. Procedures for system generation.

c. Description of implementation of the program.

d. Description of required sequences.

e. Directory of all disk files.

f. Description of all communications protocols, including data formats, command characters, and a sample of each type of data transfer or reference to current industry standards.

1.3.5.4 Operator's Manual

The operator's manual shall explain all procedures and instructions for operation of the system including:

a. Video switcher.

b. Cameras and video recording equipment.

c. Use of the software.

d. Operator commands.

e. System start-up and shutdown procedures.

f. Recovery and restart procedures.

1.3.5.5 Maintenance Manual

The maintenance manual shall describe maintenance for all equipment including inspection, periodic preventive maintenance, fault diagnosis, and repair or replacement of defective components.

1.3.5.6 Final System Drawings

The Contractor shall maintain a separate set of drawings, elementary diagrams and wiring diagrams of the CCTV system to be used for final system drawings. This set shall be accurately kept up to date by the Contractor with all changes and additions to the CCTV system and shall be delivered to the Government with the final endurance test report. In addition to being complete and accurate, this set of drawings shall be kept neat and shall not be used for installation purposes. Upon completion of the final system drawings, a representative of the Government will review the final system work with the Contractor. If the final system work is not complete, the Contractor will be so advised and shall complete the work as required. Final drawings submitted with the endurance test report shall be finished drawings on mylar or vellum.

1.4 TESTING

1.4.1 General

The Contractor shall perform predelivery testing, site testing, and adjustment of the completed CCTV system. The Contractor shall provide all personnel, equipment, instrumentation, and supplies necessary to perform all testing. Written notification of planned testing shall be given to the Government at least 14 days prior to the test, and in no case shall notice be given until after the Contractor has received written approval of the specific test procedures.

1.4.2 Test Procedures and Reports

Test procedures shall explain, in detail, step-by-step actions and expected results demonstrating compliance with the requirements of the specification. Test reports shall be used to document results of the tests. Reports shall be delivered to the Government within 7 days after completion of each test.

1.5 TRAINING

1.5.1 General

The Contractor shall conduct training courses for designated personnel in the maintenance and operation of the CCTV system as specified. The training shall be oriented to the specific system being installed under this contract. Training manuals shall be delivered for each trainee with two additional manuals

delivered for archiving at the project site. The manuals shall include an agenda, defined objectives for each lesson, and a detailed description of the subject matter for each lesson. The Contractor is responsible for furnishing all audio-visual equipment and all other training materials and supplies. Where the Contractor presents portions of the course through the use of audio-visual material, copies of the audio-visual materials shall be delivered to the Government, either as a part of the printed training manuals or on the same media as that used during the training sessions. A training day is 8 hours of instruction, including two 15 minute breaks and excluding lunchtime, Monday through Friday, during the daytime shift in effect at the facility. For guidance in planning the required instruction, the Contractor should assume the attendees will have a high school education or equivalent. Approval of the planned training schedule shall be obtained from the Government at least 30 days prior to the training.

1.5.2 Operator's Training

The course shall be taught at the project site for five consecutive training days during or after the Contractor's field testing. A maximum of 12 personnel will attend the course. No part of the training given during this course will be counted toward completion of the performance verification test. The course shall consist of classroom instruction, hands-on training, instruction on the specific hardware configuration of the installed system, and specific instructions for operating the installed system. The course shall demonstrate system start up, system operation, system shutdown, system recovery after a failure, the specific hardware configuration, and operation of the system and its software. The students should have no unanswered questions regarding operation of the installed CCTV system. The Contractor shall prepare and insert additional training material in the training manuals when the need for additional material becomes apparent during instruction. The Contractor shall prepare a written report after the completion of the course. The Contractor shall list in the report the times, dates, attendees and material covered at each training session. The Contractor shall describe the skill level of each student at the end of this course. The Contractor shall submit the report before the end of the performance verification test. The course shall include:

a. General CCTV hardware, installed system architecture and configuration.

b. Functional operation of the installed system and software.

c. Operator commands.

d. Fault diagnostics and correction.

e. General system maintenance.

f. Replacement of failed components and integration of replacement components into the operating CCTV system.

1.6 MAINTENANCE AND SERVICE

1.6.1 General Requirements

The Contractor shall provide all services required and equipment necessary to maintain the entire CCTV system in an operational state as specified for a period of 1 year after completion of the endurance test, and shall provide all necessary material required for the work. Impacts on facility operations shall be minimized when performing scheduled adjustments or other unscheduled work.

1.6.2 Description of Work

The adjustment and repair of the CCTV system includes all computer equipment, software updates, and video equipment. Provide the manufacturer's required adjustments and all other work necessary.

1.6.3 Personnel

Service personnel shall be qualified to accomplish all work promptly and satisfactorily. The Government shall be advised in writing of the name of the designated service representative, and of any changes in personnel.

1.6.4 Schedule of Work

The Contractor shall perform two inspections at 6-month intervals or less. This work shall be performed during regular working hours, Monday through Friday, excluding legal holidays. These inspections shall include:

a. Visual checks and operational tests of the CPU, switcher, peripheral equipment, interface panels, recording devices, monitors, video equipment electrical and mechanical controls, and a check of the picture quality from each camera.

b. Run system software and correct all diagnosed problems.

c. Resolve any previous outstanding problems.

1.6.5 Emergency Service

The Government will initiate service calls when the CCTV system is not functioning properly. Qualified personnel shall be available to provide service to the complete CCTV system. The Government shall be furnished with a telephone number where the service supervisor can be reached at all times. Service personnel shall be in contact with the Government within 24 hours after receiving a request for service. The CCTV system shall be restored to proper operating condition within 3 calendar days after receiving a request for service.

1.6.6 Operation

Performance of scheduled adjustments and repair shall verify operation of the CCTV system as demonstrated by the applicable portions of the performance verification test.

1.6.7 Records and Logs

The Contractor shall keep records and logs of each task, and shall organize cumulative records for each major component, and for the complete system chronologically. A continuous log shall be maintained for all devices. The log shall contain calibration, repair, and programming data. Complete logs shall be kept and shall be available for inspection on site, demonstrating that planned and systematic adjustments and repairs have been accomplished for the CCTV system.

1.6.8 Work Requests

The Contractor shall separately record each service call request, as received. The form shall include the serial number identifying the component involved, its location, date and time the call was received, nature of trouble, names of the service personnel assigned to the task, instructions describing what has to be done, the amount and nature of the materials to be used, the time and date work started, and the time and date of completion. The Contractor shall deliver a record of the work performed within 5 days after work is completed.

1.6.9 System Modifications

The Contractor shall make any recommendations for system modification in writing to the Government. No system modifications, including operating parameters and control settings, shall be made without prior approval of the Government. Any modifications made to the systems shall be incorporated into the operations and maintenance manuals, and other documentation affected.

1.6.10 Software

The Contractor shall recommend all software updates to the Government for approval. Upon Government approval, updates shall be accomplished in a timely manner, fully coordinated with the CCTV system operators, operation in the system verified, and shall be incorporated into the operations and maintenance manuals, and software documentation. There shall be at least one scheduled update near the end of the first year's warranty period, at which time the Contractor shall install and validate the latest released version of the manufacturer's software.

PART 2 PRODUCTS

2.1 MATERIALS AND EQUIPMENT

All system hardware and software components shall be produced by manufacturers regularly engaged in the production of CCTV equipment. Units of the same type of equipment shall be products of a single manufacturer. All material and equipment shall be new and currently in production. Each major component of equipment shall have the manufacturer's name and address, and the model and serial number in a conspicuous place. Equipment located at the security center or a remote control/monitoring station shall be rack mounted as shown. Television equipment shall comply with 47 CFR 15, Subparts C and H. Computing devices shall comply with 47 CFR 15, Subpart J.

2.1.1 Fungus Treatment

System components located in fungus growth inductive environments shall be completely treated for fungus resistance. Treating materials containing a mercury bearing fungicide shall not be used. Treating materials shall not increase the flammability of the component or surface being treated. Treating materials shall not cause skin irritation or other injury to personnel handling it during fabrication, transportation, operation, maintenance, or during the use of the finished items when used for the purpose intended.

2.1.2 Soldering

All soldering shall be done in accordance with standard industry practices.

2.2 ENCLOSURES

The Contractor shall provide metallic enclosures as needed for equipment not housed in racks or supplied with a housing. The enclosures shall be as specified or shown.

2.2.1 Interior

Enclosures to house camera equipment in an interior environment shall meet the requirements of NEMA 250 Type 12.

2.3 ENCLOSURE COVERS

Covers of pull and junction boxes provided to facilitate installation of the system shall be protected by tack welding or brazing the covers in place. Zinc labels shall be affixed to such boxes indicating they contain no connections. These labels shall not indicate that the box is part of the security system.

2.3.2 Conduit-Enclosure Connections

All conduit-enclosure connections shall be protected by tack welding or brazing the conduit to the enclosure. Tack welding or brazing shall be done in addition too standard conduit-enclosure connection methods as described in NFPA 70.

2.4 LOCKS AND KEY-LOCK OPERATED SWITCHES

2.4.1 Locks

All locks required to be installed on system enclosures for maintenance purposes shall be UL listed, round-key type, with three dual, one mushroom, and three plain pin tumblers or conventional key type lock having a combination of five cylinder pin and five-point three position side bar. Keys shall be stamped "U.S. GOVT. DO NOT DUP." The locks shall be so arranged that the key can only be withdrawn when in the locked position. All maintenance locks shall be keyed alike and only two keys shall be furnished for all of these locks.

2.4.2 Key-Lock-Operated Switches

All key-lock-operated switches required to be installed on system components shall be UL listed, with three dual, one mushroom, and three plain pin tumblers, or conventional key type lock having a combination of five cylinder pin and five-point three position side bar. Keys shall be stamped "U.S. GOVT. DO NOT DUP." Key-lock-operated switches shall be two position, with the key removable in either position. All key-lock-operated switches shall be keyed differently and only two keys shall be furnished for each key-lock-operated-switch.

2.5 SOLID STATE CAMERA

2.5.1 High Resolution Camera

The video camera shall conform to EIA 170 and EIA ANSI/EIA-330 specifications. All electronic components and circuits shall be solid state. Signal-to-noise ratio shall not be less than 46 dB

unweighted. The camera shall exhibit no geometric distortion. The lens mount shall be a C-mount, and the camera shall have a back focus adjustment. The camera shall operate from minus 10.0 degrees C to plus 37.7 degrees C (14 to 100 degrees F) without auxiliary heating or cooling, and with no change in picture quality or resolution. The camera shall operate on 60 Hz AC power, and shall be capable of operating over a voltage range of 105 to 130 volts.

2.5.1.1 Solid State Image Array

The camera shall have a 6.4 by 4.8 mm (1/2 inch) format solid state imaging array, and the picture produced by the camera shall be free of blemishes as defined by EIA ANSI/EIA-330. The camera shall provide not less than 550 lines of horizontal resolution, and resolution shall not vary over the life of the camera.

2.5.1.2 Sensitivity

Camera shall provide full video output with the infrared cut-off filter installed, without camera automatic gain, and a scene reflectivity of 75 percent using an f/1.4 lens giving a camera faceplate illumination at 2850K of 1.6 lx (0.15 footcandle).

2.5.1.3 Camera Synchronization

The camera shall have an input for external sync, and shall automatically switch over to internal sync if external sync is not present. The camera shall also have the capability of synchronization by line-locking to the AC power 60 Hz line frequency at the zero crossing point, and shall provide not less than plus or minus 90 degrees of vertical phase adjustment. Synchronization is not necessary using a digital system.

2.5.1.4 Connectors

Cameras with lenses having auto iris, manual iris, or zoom and focus functions shall be supplied with connectors and wiring as needed to operate the lens functions. Video signal output connector shall be a BNC. Cameras with integral fiber optic video transmitters shall have straight-tip bayonet type fiber optic video output connectors. A connector shall be provided for external sync input.

2.6 CAMERA LENSES

Camera lenses shall be all glass with coated optics. The lens mount shall be a C-mount. The lens shall be supplied with the camera, and shall have a maximum f-stop opening of f/1.4 or the maximum available for the focal length specified. The lens shall be equipped with an auto-iris mechanism unless otherwise specified. Lenses having auto iris, manual iris, or zoom and focus functions shall be supplied with connectors, wiring, receiver/drivers, and controls as needed to operate the lens functions. Lenses shall have sufficient circle of illumination to cover the image sensor evenly. Lenses shall not be used on a camera with an image format larger than the lens is designed to cover. Lens focal lengths shall be as shown or specified in the lens table.

2.7 CAMERA HOUSING

The camera and lens shall be enclosed in a tamper resistant housing as defined in the following specification. Any ancillary housing mounting hardware needed to install the housing at the camera location shall be provided as part of the housing.

2.7.1 Indoor Camera Housing

The housing shall be designed to provide a tamper resistant enclosure for indoor camera operation. The housing shall be equipped with tamper proof latches, and shall be supplied with the proper mounting brackets for the specified camera and lens. The housing and appurtenances shall be a color that does not conflict with the building interior color scheme.

2.8 VIDEO MONITOR

The monitor shall conform to EIA 170, EIA ANSI/EIA-375-A-1976, and UL 1410specifications. If a digital system is used, existing computer monitors must be able to view video. All electronic components and circuits shall be solid state except for the picture tube. The monitor shall operate on 120 volts 60 Hz AC power, shall have a stabilized high voltage power supply, and regulated low voltage power supplies. The monitor shall have automatic frequency control (AFC), bandwidth greater than 7 MHz, and horizontal resolution not less than 700 lines at the center of the picture tube. The monitor shall be capable of reproducing a minimum of 10 discernable shades of gray as described in EIA ANSI/EIA-375-A-1976. The video input shall accept composite video with switchable loop-through or 75 ohm termination.

2.8.1 Picture Tube

The monitor shall have a 380 mm (15 inch) picture tube measured diagonally.

2.8.2 Configuration

The monitor shall be configured in a cabinet mount. Monitors shall not interfere with each other when rack mounted or operated next to each other as described in EIA ANSI/EIA-375-A-1976.

2.8.3 Controls

Front panel controls shall be provided for power on/off, horizontal hold, vertical hold, contrast, and brightness. The monitor shall have switchable DC restoration if not using a digital system.

2.8.4 Connectors for Video Monitor

Video signal input and output shall be by BNC connectors if not using a digital system.

2.9 VIDEO SWITCHER

If using a digital system, video switcher will be defined as the Control Server for centrally storing video for all the cameras at the site. The Control Server does not have to comply with EIA 170. The Control Server shall be network connected and able to receive inputs electronically via TCP/IP.

The switcher shall conform to EIA 170 specifications, and shall be a vertical interval switcher. Electronic components, subassemblies, and circuits of the switcher shall be solid state. The switcher shall be microprocessor based and software programmable. The switcher shall be a modular system that shall allow for expansion or modification of inputs, outputs, alarm interfaces, and secondary control stations by addition of the appropriate modules. Switcher components shall operate on 120 volts 60 Hz AC power. The switcher central processor unit shall be capable of being interfaced to a master security computer for integrated operation and control. The video switcher central processing unit (CPU) shall have the capability of accepting time from a master clock supplied in ASCII format through an EIA ANSI/EIA/TIA-232-F input. All components, modules, cables, power supplies, software, and other items needed for a complete and operable CCTV switching system shall be provided. Switcher equipment shall be rack mounted unless otherwise specified. Rack mount hardware shall be supplied to mount the switcher components in a standard 482.6 mm (19 inch) rack as described in EIA ANSI/EIA-310-D.

2.9.1 Switcher Software

The switcher shall be software programmable, and the software shall be supplied as part of the switcher. The software shall be installed in the switcher CPU, and shall be configured as required by the site design. Changes or alterations of features under software control shall be accomplished through software programming without changes in hardware or system configuration. The switcher shall retain the current program for at least 4 hours in the event of power loss, and shall not require reprogramming in order to restart the system.

2.9.2 Switcher Matrix

The switcher shall be a programmable crosspoint switcher capable of switching any video input to any video output. The switcher to be installed at the site shall be configured to switch all cameras to one monitor, and shall have an expansion capability of not less than 10 percent. If using a digital system, switcher matrix should be integrated in to the software.

2.9.3 Control Keyboards

Control and programming keyboards shall be supplied for the video switcher at the monitoring station as shown. The control keyboard shall provide the interface between the operator and the CCTV system, and shall relay commands from the operator to the switcher CPU. The keyboard shall provide control of the video switcher functions needed for operation and programming of the video switcher. Controls shall include, but not be limited to: programming the switcher, switcher control, lens function control, pan/tilt/zoom (PTZ) control, control of environmental housing accessories, and annotation programming. If the switcher CPU requires an additional text keyboard for system management functions, the keyboard shall be supplied as part of the video switcher. If using a digital system, controls should be integrated in to the software.

2.9.4 Accessory Control Equipment

The video switcher shall be equipped with signal distribution units, preposition cards, expansion units, cables, software or any other equipment needed to ensure that the CCTV system is complete and fully operational.

2.9.5 Connectors for Video Switcher

Video signal input and output shall be by BNC connectors unless using digital system, whereby inputs and outputs should be electronically sent via TCP/IP.

2.9.6 Video Annotation

Video annotation equipment shall be provided for the video switcher. The annotation shall be alphanumeric and programmable for each video source. Annotation to be generated shall include, but not be limited to: individual video source identification number, time (hour, minute, second) in a 24 hour format, date (month, day, year), and a unique, user-defined title with at least 8 characters. The annotation shall be inserted onto the source video so that both shall appear on a monitor or recording. The lines of annotation shall be movable for horizontal and vertical placement on the video picture. The annotation shall be automatically adjusted for date. Programmed annotation information shall be retained in memory for at least 4 hours in the event of power loss. If using a digital system, video annotation should be integrated in to the software.

2.10 VIDEO CASSETTE RECORDER (VCR)

If a digital system is used, provided for central storage of digitized video at the Control Server with a minimum of 5 days of storage.

VCR shall conform to EIA 170 standards. The VCR shall be specifically designed as a time lapse recorder for use in security systems. The VCR shall operate on 120 volts 60 Hz AC power. Resolution of the VCR in normal play mode shall not be less than 320 horizontal lines in monochrome, 240 horizontal lines in color. Signal-to-noise ratio shall not be less than 40 dB. The VCR shall have a condensation or dew circuit. The VCR shall have a built-in time and date generator that can be turned on or off, and shall impose the time and date on the video during recording. A 24 hour battery back-up shall be provided to protect time/date and programmed information. The VCR shall have an audible warning alarm that shall annunciate the end of tape, excessive condensation, tape transport malfunction, or tape jam.

2.10.1 Tape and Tape Transport

The video tape used in the recorder shall be contained in a cassette mechanism, and shall not require the operator to thread the tape through the tape transport mechanism. The tape shall load through the front of the recorder.

2.10.2 Recording and Playback

The VCR shall be capable of recording for 240 hours or more on a single cassette tape with at least 6 user selectable time-lapse record speeds. The VCR shall have a contact closure alarm signal input which shall automatically switch the recorder into standard play, record mode when an alarm is initiated. The recorder shall reach stabilized record speed in 1 second or less. The VCR shall put a cue mark on the tape at the beginning of an alarm event recording. The alarm event record time shall be selectable for up to 3 minutes of automatic recording as a minimum. A record-lock feature shall be provided which shall protect the VCR against tampering with the tape transport controls and power control once recording has started. Playback functions shall include: alarm search, fast forward search, fast rewind search, rewind/fast forward, play, slow motion or step field/frame, and pause/still.

2.10.3 Connectors for VCR

Video signal input and output shall be by BNC connectors. The recorder shall provide connectors for alarm trigger signal input and output.

2.11 VIDEO FRAME STORE

The video frame store shall conform to EIA 170 standards. The frame store shall record video in a digital format. It shall be capable of recording 4 frames of video in at least a 256 x 256 matrix with at least 64 shades of gray. The frame store shall have a contact closure alarm signal input which shall automatically switch the frame store into the record mode when an alarm is initiated. The frame store shall start recording with the next full field after alarm triggering. The frame store shall operate on 120 volts 60 Hz AC power. Video signal input and output shall be by BNC connectors.

2.12 VIDEO SIGNAL EQUIPMENT

The following video signal equipment shall conform to EIA 170specifications. Electrically powered equipment shall operate on 120 volts 60 Hz AC power. All video signal inputs and outputs shall be by BNC connectors.

2.12.1 Ground Loop Corrector

The ground loop corrector shall eliminate the measured ground loop interference (common mode voltage) in wireline or coaxial video transmission lines. The ground loop corrector shall pass the full transmitted video bandwidth with no signal attenuation or loss. Clamping ground loop correctors shall be capable of rejecting at least an 8 volt peak-to-peak 60 Hz common mode signal. Ground isolation transformers shall be capable of rejecting at least a 10 volt peak-to-peak 60 Hz common mode signal. Ground isolation amplifiers shall be capable of rejecting at least a 30 volt peak-to-peak 60 Hz common mode signal. Differential ground loop correctors shall be capable of rejecting at least a 100 volt peak-to-peak 60 Hz common mode signal.

2.12.3 Video Equalizing Amplifier

The video equalizing amplifier shall be designed to correct loss in video signal level and high frequency attenuation caused by long distance video signal transmission over wireline DTM. The amplifier shall have independent signal gain and equalization controls. The amplifier shall be capable of equalizing at least 900 m (3000 feet)of RG-11/U coaxial cable conforming to paragraph CCTV Equipment Video Signal Wiring. The amplifier shall provide a minimum of plus or minus 6 dB of video gain and 12 dB of high frequency compensation. At least one video output shall be provided for each video input. Bandwidth shall be 10 MHz or greater, and frequency response to 8 MHz shall be plus or minus 1 dB or less. Hum and noise shall be 50 dB below 1 volt peak-to-peak or better. Video inputs shall be 75 ohm unbalanced, terminating, differential grounded. Video outputs shall be 75 ohm, differential, source terminated, 1 volt peak-to-peak. Output isolation shall be 40 dB or greater at 5 MHz.

2.12.4 Video Distribution Amplifier

The video distribution amplifier shall be designed to distribute a single, 75 ohm, unbalanced video input signal to a minimum of 4, 75 ohm, source terminated video outputs. The distribution amplifier shall

have not less than plus or minus 3 dB of gain adjustment for the video output. Output isolation shall be 40 dB or greater at 5 MHz. Bandwidth shall be 10 MHz or greater, and frequency response to 8 MHz shall be plus or minus 0.5 dB or less. Hum and noise shall be 55 dB below 1 volt peak-to-peak or better.

2.12.5 Master Video Sync Generator

The master video sync generator shall generate horizontal drive, vertical drive, blanking, and sync signals as a minimum, with at least one 75 ohm output provided for each signal. The master oscillator crystal shall be pre-aged, and temperature stabilized, ovenized or temperature compensated. The sync generator shall have a composite video input and shall lock to the incoming video signal. If no video is present at the video input, the sync generator shall switch to internal crystal control. Not less than 2.5 microseconds advance and 2.5 microseconds delay of horizontal phase shall be provided. Vertical blanking width adjustment shall be provided. Vertical blanking width adjustment shall have a minimum selection range of 19, 20, and 21 lines.

2.12.6 Video Sync Distribution Amplifier

The sync distribution amplifier shall be a regenerative amplifier designed to distribute a sync signal input to not less than 6, 75 ohm outputs. Output level shall remain constant and shall not be affected by input level variations. Output isolation shall be greater than 35 dB at 5 MHz. A high impedance loop through shall be provided in addition to the 6 outputs. The distribution amplifier shall have continuously variable delay range of at least 250 nanoseconds to 2.2 microseconds. The delay shall be adjustable through a front panel control.

2.13 CAMERA SUPPORT EQUIPMENT

The camera and lens contained in a camera housing shall be installed on a camera support as shown. Any ancillary mounting hardware needed to install the support and to install the camera on the support shall be provided as part of the support. The camera support shall be capable of supporting the equipment to be mounted on it.

2.13.1 Wall Mount

The camera wall mount shall be 406.4 mm (16 inches) long, and shall have an adjustable head for mounting the camera. The wall mount and head shall be constructed of aluminum, stainless steel, or steel with a corrosion-resistant finish. The head shall be adjustable for not less than plus and minus 90 degrees of pan, and not less than plus and minus 45 degrees of tilt. If the bracket is to be used in conjunction with a pan/tilt, the bracket shall be supplied without the adjustable mounting head, and shall have a bolt hole pattern to match the pan/tilt base.

2.13.2 Pan/Tilt Mount

The pan/tilt mount shall be capable of supporting the camera, lens and housing specified. If the pan/tilt is to be mounted outdoors, the pan/tilt shall be weatherproof and sized to accommodate the camera, lens and housing weight plus maximum wind loading encountered at the installation site. The pan/tilt shall have heavy-duty bearings, hardened steel gears, externally adjustable limit stops for pan and tilt, and mechanical, dynamic or friction brakes. Pan/tilt shall be permanently lubricated. The motors shall be thermally or impedance protected against overload damage. Pan movement shall not be less than 0 to 350 degrees, tilt movement shall not be less than plus and minus 90 degrees. Pan speed shall not be less

than 6 degrees per second, and tilt speed shall not be less than 3 degrees per second. The pan/tilt shall be supplied complete with wiring, wiring harnesses, connectors, receiver/driver, pan/tilt control system, pre-position cards, or any other hardware and equipment as needed to provide a fully functional pan/tilt mount to fulfill the site design requirements.

2.14 WIRE AND CABLE

The Contractor shall provide all wire and cable not indicated as Government Furnished Equipment. All wire and cable components shall be able to withstand the environment the wire or cable is installed in for a minimum of 20 years. For a digital system, shared use of industry standard Category 5 twisted pair communications cable installed for the telephone premise wiring is acceptable.

2.14.1 CCTV Equipment Video Signal Wiring

The coaxial cable shall have a characteristic impedance of 75 ohms plus or minus 3 ohms. RG 59/U coaxial signal cable shall have shielding which provides a minimum of 95 percent coverage, a solid copper center conductor of not less than 23 AWG, polyethylene insulation, and a black non-contaminating polyvinylchloride (PVC) jacket. RG 11/U coaxial cable shall have shielding which provides a minimum of 95 percent coverage, with center conductor of 18 AWG or larger polyethylene insulation, and a black non-contaminating polyvinylchloride (PVC) jacket.

2.14.2 Low Voltage Control Wiring

Twisted pair low voltage control wiring shall be as described in Section 16415 ELECTRICAL WORK, INTERIOR. Plenum or riser cables shall be IEEE C2 CL2P certified.

2.14.3 Digital Data Interconnection Wiring

Interconnecting cables carrying digital data between equipment located at the monitoring site shall be not less than 20 AWG and shall be stranded copper wire for each conductor. The cable or each individual conductor within the cable shall have a shield that provides 100 percent coverage. Cables with a single overall shield shall have a tinned copper shield drain wire. Plenum or riser cables shall be IEEE C2 CL2P certified.

PART 3 EXECUTION

3.1 INSTALLATION

The Contractor shall install all system components including Government furnished equipment, and appurtenances in accordance with the manufacturer's instructions, IEEE C2 and as shown, and shall furnish all necessary connectors, terminators, interconnections, services, and adjustments required for a complete and operable system. All interior wiring, including low voltage wiring outside the security center control console and equipment racks, cabinets, boxes and similar enclosures, shall be installed in rigid, galvanized steel conduit conforming to UL 6. Interconnection wiring between components mounted in the same rack or cabinet does not need to be installed in conduits. Minimum conduit size shall be 13 mm (1/2 inch). Connections shall be tight tapered threaded. No threadless fittings or couplings shall be used. Conduit enclosures shall be cast metal or malleable iron as specified in Section 16415 with threaded hubs or bodies. Electric metallic tubing (EMT), armored cable, nonmetallic sheathed cables, or flexible conduit will not be permitted except where specifically shown. DTM shall

not be pulled into conduits or placed in raceways, compartments, outlet boxes, junction boxes, or similar fittings with other building wiring. Flexible cords or cord connections shall not be used to supply power to any components of the CCTV system, except where specifically shown. All other electrical work shall be as specified in Section 16415 and as shown. Grounding shall be installed as necessary to preclude ground loops, noise, and surges from adversely affecting system operation.

3.1.1 Current Site Conditions

The Contractor shall visit the site and verify that site conditions are in agreement with the design package. The Contractor shall report all changes to the site or conditions that will affect performance of the system to the Government in a report as defined in paragraph Group II Technical Data Package. The Contractor shall not take any corrective action without written permission from the Government.

3.1.2 Enclosure Penetrations

All enclosure penetrations shall be from the bottom unless the system design requires penetrations from other directions. Penetrations of interior enclosures involving transitions of conduit from interior to exterior, and all penetrations on exterior enclosures shall be sealed with rubber silicone sealant to preclude the entry of water. The conduit riser shall terminate in a hot-dipped galvanized metal cable terminator. The terminator shall be filled with an approved sealant as recommended by the cable manufacturer, and in such a manner that the cable is not damaged.

3.1.3 Cold Galvanizing

All field welds and brazing on factory galvanized boxes, enclosures, and conduits shall be coated with a cold galvanized paint containing at least 95 percent zinc by weight.

3.1.4 Interconnection of Console Video Equipment

The Contractor shall connect signal paths between video equipment of 7.5 m (25 feet) or less with RG-59/U coaxial cable and signal paths between equipment longer than 7.5 m (25 feet) with RG-11/U coaxial cable. Cables shall be as short as practicable for each signal path without causing strain at the connectors. Rack mounted equipment on slide mounts shall have cables of sufficient length to allow full extension of the slide rails from the rack.

3.1.5 Cameras

The Contractor shall install the cameras with the proper focal length lens as indicated for each zone; connect power and signal lines to the camera; set cameras with fixed iris lenses to the proper f-stop to give full video level; aim camera to give field of view as needed to cover the alarm zone; aim fixed mount cameras installed outdoors facing the rising or setting sun sufficiently below the horizon to preclude the camera looking directly at the sun; focus the lens to give a sharp picture over the entire field of view; and synchronize all cameras so the picture does not roll on the monitor when cameras are selected.

3.1.6 Monitors

The Contractor shall install the monitors as shown and specified; connect all signal inputs and outputs as shown and specified; terminate video input signals as required; and connect the monitor to AC power.

3.1.7 Switcher

The Contractor shall install the switcher as shown and according to manufacturer's instructions; connect all subassemblies as specified by the manufacturer and as shown; connect video signal inputs and outputs as shown and specified; terminate video inputs as required; connect control signal inputs and outputs for ancillary equipment or secondary control/monitoring sites as specified by the manufacturer and as shown; connect the switcher CPU and switcher subassemblies to AC power; load all software as specified and required for an operational CCTV system configured for the site requirements, including databases, operational parameters, and system, command, and application programs; and program the video annotation for each camera.

3.1.8 Video Recording Equipment

The Contractor shall install the video recording equipment as shown and as specified by the manufacturer; connect video signal inputs and outputs as shown and specified; connect alarm signal inputs and outputs as shown and specified; and connect video recording equipment to AC power.

3.1.9 Video Signal Equipment

The Contractor shall install the video signal equipment as specified by the manufacturer and as shown; connect video or signal inputs and outputs as shown and specified; terminate video inputs as required; connect alarm signal inputs and outputs as required; connect control signal inputs and outputs as required; and connect electrically powered equipment to AC power.

3.1.10 Camera Mount

The Contractor shall: install the camera mount as specified by the manufacturer and as shown; provide mounting hardware sized appropriately to secure the mount, camera and housing ; provide electrical and signal transmission cabling to the mount location as required; connect signal lines and AC power to mount interfaces.

3.1.11 Pan/Tilt Mount

The Contractor shall install pan/tilt mount, receiver/driver and mount appurtenances as specified by the manufacturer and as shown; supply mounting hardware sized appropriately to secure pan/tilt, camera and housing; install pan/tilt control wiring as shown; and connect pan/tilt to control wiring and AC power.

3.2 SYSTEM STARTUP

The Contractor shall not apply power to the CCTV system until the following items have been completed:

a. CCTV system equipment items and DTM have been set up in accordance with manufacturer's instructions.

b. A visual inspection of the CCTV system has been conducted to ensure that defective equipment items have not been installed and that there are no loose connections.

c. System wiring has been tested and verified as correctly connected as indicated.

d. All system grounding and transient protection systems have been verified as properly installed and connected as indicated.

e. Power supplies to be connected to the CCTV system have been verified as the correct voltage, phasing, and frequency as indicated.

f. Satisfaction of the above requirements shall not relieve the Contractor of responsibility for incorrect installation, defective equipment items, or collateral damage as a result of Contractor work/equipment.

3.3 SUPPLEMENTAL CONTRACTOR QUALITY CONTROL

The following requirements supplement the contractor quality control requirements specified elsewhere in the contract. The contractor shall provide the services of technical representatives who are thoroughly familiar with all components and installation procedures of the installed IDS; and are approved by the Contracting Officer. These representatives will be present on the job site during the preparatory and initial phases of quality control to provide technical assistance. These representatives shall also be available on an as needed basis to provide assistance with follow-up phases of quality control. These technical representatives shall participate in the testing and validation of the system and shall provide certification that their respective system portions meet its contractual requirements.

3.4 SITE TESTING

3.4.1 General

The Contractor shall provide all personnel, equipment, instrumentation, and supplies necessary to perform all site testing. The Government will witness all performance verification and endurance testing. Written permission shall be obtained from the Government before proceeding with the next phase of testing. Original copies of all data produced during performance verification and endurance testing shall be turned over to the Government at the conclusion of each phase of testing prior to Government approval of the test.

3.4.2 Contractor's Field Testing

The Contractor shall calibrate and test all equipment, verify DTM operation, place the integrated system in service, and test the integrated system. Ground rods installed by the Contractor shall be tested as specified in IEEE Std 142. The Contractor shall deliver a report describing results of functional tests, diagnostics, and calibrations including written certification to the Government that the installed complete system has been calibrated, tested, and is ready to begin performance verification testing. The report shall also include a copy of the approved performance verification test procedure. Note if a camera cannot be aimed to cover the zone and exclude the rising or setting sun from the picture.. If any of the above conditions or other conditions exist that cause picture degradation or interfere with the camera field of view, the Contractor shall inform the Contracting Officer. The Contractor shall provide the Government with the documentation of field tests as part of the documentation of the system and shall submit a letter certifying that the CCTV system is ready for performance verification testing. The field testing shall as a minimum include:

a. Verification that the video transmission system and any signal or control cabling have been installed, tested, and approved as specified.

b. When the system includes remote control/monitoring stations or remote switch panels, verification that the remote devices are functional, communicate with the security center, and perform all functions as specified.

c. Verification that the switcher is fully functional and that the switcher software has been programmed as needed for the site configuration.

d. Verification that switcher software is functioning correctly. All software functions shall be exercised.

e. Operation of all electrical and mechanical switcher controls and verification that the control performs the designed function.

f. Verification that all video sources and video outputs provide a full bandwidth signal that complies with EIA 170 at all video inputs.

g. Verification that all video signals are terminated properly.

h. Verification that all cameras are aimed and focused properly. The Contractor shall conduct a walk test of the area covered by each camera to verify the field of view.

i. Verification that all cameras are synchronized and that the picture does not roll when cameras are switched.

j. When pan/tilt mounts are used in the system, verification that the limit stops have been set correctly. Verification of all controls for pan/tilt or zoom mechanisms are operative and that the controls perform the desired function. If preposition controls are used, verification that all home positions have been set correctly, and have been tested for auto home function and correct home position.

The Contractor shall deliver a report describing results of functional tests, diagnostics, and calibrations including written certification to the Government that the installed complete system has been calibrated, tested, and is ready to begin performance verification testing. The report shall also include a copy of the approved performance verification test procedure.

3.4.3 Performance Verification Test

The Contractor shall demonstrate that the completed CCTV system complies with the contract requirements. Using approved test procedures, all physical and functional requirements of the project shall be demonstrated and shown. The performance verification test, as specified, shall not be started until receipt by the Contractor of written permission from the Government, based on the Contractor's written report. This shall include certification of successful completion of Contractor Field Testing as specified in paragraph "Contractor's Field Testing," and upon successful completion of training as specified. The Government may terminate testing at any time when the system fails to perform as specified. Upon termination of testing by the Government or by the Contractor, the Contractor shall

commence an assessment period as described for Endurance Testing Phase II. Upon successful completion of the performance verification test, the Contractor shall deliver test reports and other documentation as specified to the Government prior to commencing the endurance test.

3.4.4 Endurance Test

a. The Contractor shall demonstrate the specified requirements of the completed system. The endurance test shall be conducted in phases as specified. The endurance test shall not be started until the Government notifies the Contractor, in writing, that the performance verification test is satisfactorily completed, training as specified has been completed, and correction of all outstanding deficiencies has been satisfactorily completed. The Contractor shall provide one operator to operate the system 24 hours per day, including weekends and holidays, during Phase I and Phase III endurance testing, in addition to any government personnel that may be made available. The Government may terminate testing at any time the system fails to perform as specified. Upon termination of testing by the Government or by the Contractor, the Contractor shall commence an assessment period as described for Phase II. During the last day of the test the Contractor shall verify the operation of each camera. Upon successful completion of the endurance test, the Contractor shall deliver test reports and other documentation as specified to the Government prior to acceptance of the system.

b. Phase I (Testing): The test shall be conducted 24 hours per day for 15 consecutive calendar days, including holidays, and the system shall operate as specified. The Contractor shall make no repairs during this phase of testing unless authorized by the Government in writing. If the system experiences no failures during Phase I testing, the Contractor may proceed directly to Phase III testing after receipt by the Contractor of written permission from the Government.

c. Phase II (Assessment): After the conclusion of Phase I, the Contractor shall identify all failures, determine causes of all failures, repair all failures, and deliver a written report to the Government. The report shall explain in detail the nature of each failure, corrective action taken, results of tests performed, and shall recommend the point at which testing should be resumed. After delivering the written report, the Contractor shall convene a test review meeting at the job site to present the results and recommendations to the Government. The meeting shall not be scheduled earlier than 5 business days after receipt of the report by the Government. As a part of this test review meeting, the Contractor shall demonstrate that all failures have been corrected by performing appropriate portions of the performance verification test. Based on the Contractor's report and the test review meeting, the Government will determine the restart date, or may require that Phase I be repeated. If the retest is completed without any failures, the Contractor may proceed directly to Phase III testing after receipt by the Contractor of written permission from the Government.

d. Phase III (Testing): The test shall be conducted 24 hours per day for 15 consecutive calendar days, including holidays, and the system shall operate as specified. The Contractor shall make no repairs during this phase of testing unless authorized by the Government in writing.

e. Phase IV (Assessment): After the conclusion of Phase III, the Contractor shall identify all failures, determine causes of all failures, repair all failures, and deliver a written report to the Government. The report shall explain in detail the nature of each failure, corrective action

taken, results of tests performed, and shall recommend the point at which testing should be resumed. After delivering the written report, the Contractor shall convene a test review meeting at the job site to present the results and recommendations to the Government. The meeting shall not be scheduled earlier than 5 business days after receipt of the report by the Government. As a part of this test review meeting, the Contractor shall demonstrate that all failures have been corrected by repeating appropriate portions of the performance verification test. Based on the Contractor's report and the test review meeting, the Government will determine the restart date, and may require that Phase III be repeated. The Contractor shall not commence any required retesting until after receipt of written notification by Government. After the conclusion of any retesting which the Government may require, the Phase IV assessment shall be repeated as if Phase III had just been completed.

f. Exclusions: The Contractor will not be held responsible for failures resulting from the following:

(1) An outage of the main power supply in excess of the capability of any backup power source, provided that the automatic initiation of all backup sources was accomplished.

(2) Failure of a Government furnished DTM circuit, provided that the failure was not due to Contractor furnished equipment, installation, or software.

(3) Failure of existing Government owned equipment, provided that the failure was not due to Contractor furnished equipment, installation, or software.

END OF SECTION

This page intentionally blank

SECTION 16770

RADIO AND PUBLIC ADDRESS SYSTEMS

PART 1 GENERAL

1.1 REFERENCES

The publications listed below form a part of this specification to the extent referenced. The publications are referred to in the text by basic designation only.

ELECTRONIC INDUSTRIES ASSOCIATION (EIA)

EIA ANSI/EIA/310-D	(1992) Cabinets, Racks, Panels, and Associated Equipment

NATIONAL FIRE PROTECTION ASSOCIATION (NFPA)

NFPA 70	(1996) National Electrical Code

1.2 SYSTEM DESCRIPTION

The radio and public address system shall consist of an audio distribution network to include amplifiers, mixers, microphones, speakers, cabling, and any ancillary components required to meet the required system configuration and operation.

1.2.1 Multi-Channel System

The system shall provide four channels of entertainment for distribution over an audio network to each room and to loudspeakers as indicated. Each channel shall be separate, and equipment for each channel shall be identical, except for alternate program inputs which shall be suitable for the alternate source specified. The system shall include antennas, AM and FM radio tuners, amplifiers, compact disc players, cassette tape players, and all accessories required.

1.2.2 Multi-Channel System with Paging

The system shall include inputs for compact disc, magnetic tape, telephone, and all channel paging, control for each input, power amplifying equipment, and accessories required to output the public address and paging audio signals through selected portions of the audio distribution network as indicated. The paging signal shall replace all channels of the radio system output, when the paging function is activated.

1.2.3 System Performance

The system shall provide even sound distribution throughout the designated area, plus or minus 3 dB for the 1-octave band centered at 4000 Hz. The system shall provide uniform frequency response throughout the designated area, plus or minus 3 dB as measured with 1/3-octave bands of pink noise at locations across the designated area selected by the Contracting Officer. The system shall be capable of delivering 75 dB average program level with additional 10 dB peaking margin sound pressure level (SPL) to any location in the area at an acoustic distortion level below 5 percent total harmonic

distortion (THD). Unless otherwise specified the sound pressure reference level is 20 micro Pascal (0.00002 Newtons per square meter).

1.3 SUBMITTALS

Government approval is required for submittals with a "GA" designation; submittals having an "FIO" designation are for information only. The following shall be submitted in accordance with Section 01330 SUBMITTAL PROCEDURES:

SD-01 Data

Spare Parts; FIO.

Spare parts data for each different item of material and equipment specified, after approval of the detail drawings and not later than 2 months prior to the date of beneficial occupancy. The data shall include a complete list of parts and supplies, with current unit prices and source of supply.

SD-04 Drawings

Radio and Public Address System; GA.

Detail drawings consisting of a complete list of equipment and material, including manufacturer's descriptive and technical literature, performance charts and curves, catalog cuts, and installation instructions. Detail drawings shall also contain complete wiring and schematic diagrams and any other details required to demonstrate that the system has been coordinated and will properly function as a unit. Drawings shall show proposed layout of equipment and appurtenances, and equipment relationship to other parts of the work including clearances for maintenance and operation.

SD-09 Reports

Test Plan; GA.

Test plan and test procedures for the acceptance tests. The test plan and test procedures shall explain in detail, step-by-step actions and expected results to demonstrate compliance with the requirements specified. The procedure shall also explain methods for simulating the necessary conditions of operation to demonstrate system performance.

Acceptance Tests; FIO.

Test reports in booklet form showing all field tests performed to adjust each component and to prove compliance with the specified performance criteria, upon completion and testing of the installed system. The reports shall include the manufacturer, model number, and serial number of test equipment used in each test. Each report shall indicate the final position of controls and operating mode of the system.

SD-19 Operation and Maintenance Manuals

Radio and Public Address System; FIO.

Six copies of the operation manual outlining the step-by-step procedures required for system start up, operation, and shutdown. The manual shall include equipment layout and schematics of simplified

wiring and control diagrams of the system as installed, the manufacturer's name, model number, and brief description of all equipment and their basic operating features. Six copies of maintenance manual listing routine maintenance procedures, possible breakdowns and repairs, and troubleshooting guides. The manual shall include equipment layout and schematics and simplified wiring and control diagrams of the system.

1.4 DELIVERY AND STORAGE

Equipment placed in storage until installation time shall be stored with protection from the weather, humidity and temperature variations, dirt and dust, and other contaminants.

1.5 VERIFICATION OF DIMENSIONS

The Contractor shall become familiar with the details of the work and working conditions, shall verify dimensions in the field, and shall advise the Contracting Officer of any discrepancies before performing the work.

PART 2 PRODUCTS

2.1 STANDARD PRODUCTS

Material and equipment to be provided shall be the standard products of a manufacturer regularly engaged in the manufacture of such products, and shall essentially duplicate material and equipment that have been in satisfactory use at least 2 years. All components used in the system shall be commercial designs that comply with the requirements specified. Equipment shall be supported by a service organization that is, in the opinion of the Contracting Officer, reasonably convenient to the site.

2.1.1 Identical Items

Items of the same classification shall be identical. This requirement includes equipment, modules, assemblies, parts, and components.

2.1.2 Nameplates

Each major component of equipment shall have the manufacturer's name, address, model and catalog number, and serial number on a plate secured to the equipment.

2.2 MIXER AMPLIFIER

Mixer amplifier shall as a minimum conform to the following specifications:

Rated Power Output:	150 watts RMS
Frequency Response:	Plus or Minus 2 dB, 60-13,000 Hz
Distortion:	Less than 1 percent at RPO, 60 - 13,000 Hz
Inputs:	2 microphones (high impedance or low-impedance unbalanced 2 Aux. (high-impedance)

Output Impedance:	Balanced 4, 8, and 16 ohms
Output Voltage:	25 and 70 volts
Power Requirement:	110-125 Vac 60 Hz

2.3 LOUDSPEAKERS~~, CONE~~

2.3.1 Cone Speaker

The cone speaker shall as a minimum conform to the following specifications:

Application:	Ceiling
Frequency range:	60 to 12,000 Hz
Power Rating:	Normal - 7 watts Peak - 10 watts
Voice Coil Impedance:	8 ohms
Line Matching Transformer Type:	25/70 volt line
Capacity:	2 watts
Magnet:	8 ounces or greater
Primary Taps:	0.5, 1, and 2 watts
Primary Impedance:	25 volts - 1250, 625, and 312 ohms 70 volts - 10k, 5k, and 2.5k ohms
Frequency Response:	30 - 20,000 Hz
Insertion Loss:	Less than 1 dB

2.3.2 The horn speaker shall as a minimum conform to the following specifications:

Application:	Indoor
Frequency Response:	400 - 14,000 Hz
Power Taps:	70 volt line - .9, 1.8, 3.8, 7.5, and 15 watts
Impedance:	5000, 2500, 1300, 670, 330, 90, and 45 ohms
Power Rating:	Normal - 7 watts Peak - 15 watts

2.4 AM/FM EQUIPMENT

2.4.1 AM/FM Tuner

AM/FM tuner shall be rack-mounted and shall as a minimum conform to the following characteristics:

Tuning Range:	AM - 540 to 1605 kHz FM - 88 to 108 MHz
Selectivity:	60 dB on FM 40 dB on AM
Sensitivity:	FM - 1.5 microvolts AM - 2.0 microvolts
Capture Ratio:	1.0 dB
Power Requirement:	110-125 Vac, 60Hz

2.4.2 AM/FM Antenna

The AM/FM antenna shall be roof-mounted, either combined and suitable for both AM and FM reception or separate AM and FM antennas and shall cover all frequency bands specified for radio tuners. The antenna shall be supported at least 1.5 m clear above the roof by means of self-supported or guyed mast. The system shall be furnished complete with a transformer, insulators, crossover insulator, 75 ohm coaxial cable of proper length, lightning arresters, coupling transformer and divider network at the radio tuners. Attenuation of the coaxial cable span between the antenna and amplifier shall not exceed 2.5 dB at 108 MHz.

2.6 COMPACT DISC PLAYER

Player shall have three beam laser pickup, dual Digital-to-Analog converters, random access and random mode programmable playback. Player shall have capability to play up to 6 disc automatically. Player shall as a minimum conform to the following:

Frequency:	10 - 20,000 Hz Plus or Minus 1 dB
Signal-to-Noise:	Minimum of 100 dB
Dynamic Range:	Minimum of 96 dB
Total Harmonic Distortion:	Maximum of 0.007% at 1KH2
Channel Separation:	Minimum 90 dB at 1 KH2
Quantization:	Minimum of 16 Bits Linear per channel
Conversion Rate:	Minimum 4 x Oversampling

Disc Size: 5 inch

2.6 CASSETTE TAPE EQUIPMENT

The cassette tape play deck shall as a minimum conform to the following specifications:

Frequency Response: Plus or minus 3 dB, 40 - 14,000 Hz

Wow and Flutter: Less than 0.09 percent WRMS

Signal-to-Noise: 64 dB

Distortion: 1.3 percent

Play Head: Hard Parmalloy

Operation: Automatic Reverse

Power Requirements: 110-125 Vac, 60 Hz

2.7 PRIORITY RELAYS AND CONTROLS

Priority relays and controls required to accomplish operations specified shall be provided. Relays shall be completely enclosed with a plastic dust cover for maximum protection against foreign matter, and shall be plug-in type. Relays shall be provided with a diode wired across the relay coil for transient suppression and shall be installed utilizing factory-prewired, rack-mounted receptacle strips. Coil shall be maximum 24 volts dc.

2.8 SWITCHES AND CONTROLS

The loudspeaker in each room, or group of speakers in a room, shall be provided with a flush program channel selector rotating-switch knob. The switch shall be mounted at location and height above the floor as shown and in accordance with Section 16415 ELECTRICAL WORK, INTERIOR. A volume control shall be installed with a switch at each station and shall be of the auto transformer type and set so that the maximum volume is sufficient for the area while not disturbing adjacent areas. If music is turned down or off, the paging signal shall override controls. Each device plate shall be satin-finished, corrosion-resisting steel permanently marked to indicate the channel selected.

2.9 EQUIPMENT RACKS

Equipment shall be mounted on 482.6 mm (19 inch) 19 inch racks in accordance with EIA ANSI/EIA/310-D and located as shown on drawings. Ventilated rear panels, solid side panels, and solid top panels shall be provided. Perforations or louvers may be provided in front panels to ensure adequate ventilation of equipment. The racks and panels shall be factory finished with a uniform baked enamel over rust inhibiting primer.

2.10 SPEAKER CABLE

Cables shall be of the gauge required depending upon the cable run length. In no case shall any cable be used which is smaller than 20 AWG. Insulation on the conductors shall be polyvinyl chloride (PVC) or an equivalent synthetic thermoplastic not less than 0.2 mm (0.009 inch). Cables shall be

shielded with a 34-gauge tinned soft copper strand formed into a braid. Cables shall be jacketed with a PVC compound. The jacket thickness shall be 0.5 mm (0.0200 inch) minimum.

2.11 POWER SURGE PROTECTION

Major components of the system such as mixer amplifiers, compact disc players, cassette tape players, and tuners, shall have a device, whether internal or external, which provides protection against voltage spikes and current surges originating from commercial power sources.

2.12 SIGNAL SURGE PROTECTION

Major components of the system shall have internal protection circuits which protects the component from mismatched loads, direct current, and shorted output lines.

PART 3 EXECUTION

3.1 INSTALLATION

All equipment shall be installed as indicated and specified, and in accordance with the manufacturer's recommendations except where otherwise indicated. Equipment mounted out-of-doors or subject to inclement conditions shall be weatherproofed.

3.1.1 Equipment Racks

Racks shall be mounted side-by-side and bolted together. Items of the same function shall be grouped together, either vertically or side-by-side. Controls shall be symmetrically arranged at a height as shown. Tape equipment shall be at a height above the floor as shown. Audio input and interconnections shall be made with approved shielded cable and plug connectors; output connections may be screw terminal type. All connections to power supplies shall utilize standard male plug and female receptacle connectors with the female receptacle being the source side of the connection. Inputs, outputs, interconnections, test points, and relays shall be accessible at the rear of the equipment rack for maintenance and testing. Each item shall be removable from the rack without disturbing other items or connections. Empty space in equipment racks shall be covered by blank panels so that the entire front of the rack is occupied by panels.

3.1.2 Wiring

Wiring shall be installed in rigid conduit, intermediate metal conduit, cable trays, or electric metallic tubing as specified in Section 16415 ELECTRICAL WORK, INTERIOR. Wiring for grounding, line level, video, speaker and power cables shall be isolated from each other by physical isolation and metallical shielding. Shielding shall be terminated at only one end.

3.2 GROUNDING

All grounding practices shall comply with NFPA 70. The antenna mast shall be separately grounded. The system shall utilize a multiple-point signal grounding scheme where conductive path connections are required between each piece of equipment and the reference ground point. An isolated ground bar for power shall be provided for the connection of the main system components. The ground bar shall be connected to the main service ground utilizing a No. 6 conductor.

3.3 ACCEPTANCE TESTS

After installation has been completed, the Contractor shall conduct acceptance tests, utilizing the approved test procedures, to demonstrate that equipment operates in accordance with specification requirements. The Contractor shall notify the Contracting Officer 30 days prior to the performance of tests. In no case shall notice be given until after the Contractor has received written Contracting Officer approval of the test plans as specified. The acceptance tests shall include originating and receiving messages at specified stations, at proper volume levels, without cross talk or noise from other links or nondesignated units.

3.4 TRAINING

The Contractor shall conduct a training course for members of the operating and maintenance staff as designated by the Contracting Officer. The training course will be given at the installation during normal working hours for a total of 8 hours and shall start after the system is functionally complete but prior to final acceptance tests. The field instructions shall cover all of the items contained in the approved operating and maintenance manuals, as well as demonstrations of routine maintenance operations. The Contracting Officer shall be notified at least 14 days prior to the start of the training course.

END OF SECTION