US Army Corps
of Engineers
Tulsa District

TWO COMPANY SATELLITE FIRE STATION
FORT SILL, OKLAHOMA

PN: 45652 FY: 98

Volume 1 Bidding Requirements
Contract Forms
Conditions of the Contract
Specifications Division 1

PROFESSIONAL DESIGN GROUP
Consulting Engineers & Architects
3545 NW 58th Suite 200
Oklahoma City, Oklahoma 73112

APRIL 1998

INFORMATION

For information regarding site conditions and the equipment ownership and operating expense schedule contact Mr. Steve Arant, Area Engineer, Ft. Sill Area Office, US Army Corps of Engineers (Bldg. 1945), P.O. Box 33159, Ft. Sill, OK, 73503-0159, Telephone 580-355-6148.

For technical information regarding plans and specifications contact Tulsa District 0ffice, Corps of Engineers, Tulsa, Oklahoma, telephone 918-669-7060, Mr. Kevin Weber.

For information regarding bidding procedures, bonds, additional sets of plans and specifications, and lists of plans holders contact Contracting Division, telephone 918-669-7275, Tulsa, Oklahoma.

Collect calls not accepted.

ckd

TABLE OF CONTENTS

BIDDING REQUIRMENTS, CONTRACT FORMS & CONDITIONS OF THE CONTRACT

00010 SOLICITATION, OFFER & AWARD (FORM 1442) & BIDDING SCHEDULE
00100 INSTRUCTIONS, CONDITIONS, AND NOTICES TO BIDDERS
00600 REPRESENTATIONS AND CERTIFICATIONS
00700 CONTRACT CLAUSES
00800 SPECIAL CONTRACT REQUIREMENTS

SPECIFICATIONS

DIVISION 1 - GENERAL

01040 COORDINATION, FIELD ENGINEERING, AND MEETINGS
01090 SOURCES FOR REFERENCE PUBLICATIONS
01100 SPECIAL PROJECT PROCEDURES
01300 SUBMITTAL PROCEDURES
01310 PROJECT SCHEDULE
01440 CONTRACTOR QUALITY CONTROL
01500 CONSTRUCTION FACILITIES AND TEMPORARY CONTROLS
01561 ENVIRONMENTAL PROTECTION
01580 BULLETIN BOARD, PROJECT SIGN, AND SAFETY SIGN
01600 MATERIAL AND EQUIPMENT
01700 CONTRACT CLOSEOUT

DIVISION 2 - SITEWORK

02050 DEMOLITION
02210 GRADING
02221 EXCAVATION, FILLING AND BACKFILLING FOR BUILDINGS
02222 EXCAVATION, TRENCHING, AND BACKFILLING FOR UTILITIES SYSTEMS
02225 EARTHWORK FOR ROADWAYS, RAILROADS, AND AIRFIELDS
02230 CLEARING AND GRUBBING
02231 STONE PROTECTION
02241 AGGREGATE BASE COURSE
02245 FLY ASH MODIFIED SUBGRADE
02511 CONCRETE SIDEWALKS AND CURBS AND GUTTERS
02580 PAVEMENT MARKINGS
02592A FIELD MOLDED SEALANTS FOR SEALING JOINTS IN RIGID PAVEMENTS
02660 WATER DISTRIBUTION SYSTEM
02685 GAS DISTRIBUTION SYSTEM
02711 FOUNDATION DRAINAGE SYSTEM
02720 STORM-DRAINAGE SYSTEM
02730 SANITARY SEWERS
02754 CONCRETE PAVEMENTS FOR SMALL PROJECTS
02841 TRAFFIC AND HANDICAP PARKING SIGNS
02935 TURF
02950 TREES, SHRUBS, GROUND COVERS, AND VINES

DIVISION 3 - CONCRETE

03100 STRUCTURAL CONCRETE FORMWORK
03200 CONCRETE REINFORCEMENT
03300 CAST-IN-PLACE STRUCTURAL CONCRETE

DIVISION 4 - MASONRY

04200 MASONRY

DIVISION 5 - METALS

05120	STRUCTURAL STEEL
05210	STEEL JOISTS
05300	STEEL DECKING
05500	MISCELLANEOUS METAL

DIVISION 6 - WOOD AND PLASTICS

06100	ROUGH CARPENTRY
06400	MILLWORK

DIVISION 7 - THERMAL AND MOISTURE PROTECTION

07210	BUILDING INSULATION
07240	EXTERIOR INSULATION AND FINISH SYSTEM
07270	FIRESTOPPING
07416	STRUCTURAL STANDING SEAM METAL ROOF (SSSMR) SYSTEM
07600	SHEET METALWORK, GENERAL
07900	JOINT SEALING

DIVISION 8 - DOORS AND WINDOWS

08110	STEEL DOORS AND FRAMES
08210	WOOD DOORS
08360	SECTIONAL OVERHEAD DOORS
08520	ALUMINUM WINDOWS
08700	BUILDERS' HARDWARE
08810	GLASS AND GLAZING

DIVISION 9 - FINISHES

09250	GYPSUM WALLBOARD
09310	CERAMIC TILE
09445	RESINOUS TERRAZZO FLOORING
09650	RESILIENT FLOORING
09680	CARPET
09900	PAINTING, GENERAL
09915	COLOR SCHEDULE
09950	WALL COVERINGS

DIVISION 10 - SPECIALTIES

10100	MISCELLANEOUS ITEMS
10160	TOILET PARTITIONS
10440	INTERIOR SIGNAGE
10800	TOILET ACCESSORIES

DIVISION 11 - EQUIPMENT

11302	PREFABRICATED GRAVITY OIL/WATER SEPARATOR

DIVISION 12 - FURNISHINGS

NONE

DIVISION 13 - SPECIAL CONSTRUCTION

13080	SEISMIC PROTECTION FOR MECHANICAL, ELECTRICAL EQUIPMENT

DIVISION 14 - CONVEYING SYSTEMS

NONE

DIVISION 15 - MECHANICAL

15190 IDENTIFICATIONS OF PIPING
15250 THERMAL INSULATION FOR MECHANICAL SYSTEMS
15330 WET PIPE SPRINKLER SYSTEM, FIRE PROTECTION
15400 PLUMBING, GENERAL PURPOSE
15488 GAS PIPING SYSTEMS
15565 HEATING SYSTEM; GAS-FIRED HEATERS
15653 AIR-CONDITIONING SYSTEM (UNITARY TYPE)
15895 GENERAL EXHAUST SYSTEM
15940 EMERGENCY RESPONSE VEHICLE EXHAUST SYSTEM(S)
15950 HEATING, VENTILATING AND AIR CONDITIONING (HVAC) CONTROL SYSTEM
15990 TESTING, ADJUSTING, AND BALANCING OF HVAC SYSTEMS
15995 COMMISIONING OF HVAC SYSTEMS

DIVISION 16 - ELECTRICAL

16262 AUTOMATIC TRANSFER SWITCH
16264 NATURAL GAS-GENERATOR SET
16370 ELECTRICAL DISTRIBUTION SYSTEM, AERIAL
16375 ELECTRICAL DISTRIBUTION SYSTEM, UNDERGROUND
16415 ELECTRICAL WORK, INTERIOR
16640 CATHODIC PROTECTION SYSTEM (SACRIFICIAL ANODE)

-- End of Specifications Table Of Contents --

SOLICITATION, OFFER AND AWARD (Construction, Alteration, or Repair)	1. SOLICITATION NO.	2. TYPE OF SOLICITATION	3. DATE ISSUED	PAGE OF PAGES
	DACA56-98-B-0017	[X] SEALED BID (IFB) [ ] NEGOTIATED (RFP)	28 Apr 98	1 of 2

IMPORTANT - The "offer" section on the reverse must be fully completed by the offeror.

4. CONTRACT NO.	5. REQUISITION/PURCHASE REQUEST NO.	6. PROJECT NO.

7. ISSUED BY	W44XGQ	8. ADDRESS OFFER TO
Department of the Army Corps of Engineers Tulsa District		The Contracting Officer Tulsa District, Corps of Engineers ATTN: Contracting Division PO Box 61 (1645 South 101st East Avenue) Tulsa, OK 74121-0061

9. FOR INFORMATION CALL:	A. NAME	B. TELEPHONE NO. *(Include area code)* (NO COLLECT CALLS)
	See preceding page entitled "NOTICES"	

SOLICITATION

NOTE: In sealed bid solicitations "offer" and "offeror" mean "bid" and "bidder".

10. THE GOVERNMENT REQUIRES PERFORMANCE OF THE WORK DESCRIBED IN THESE DOCUMENTS *(Title, identifying no., date):*

TWO COMPANY SATELLITE FIRE STATION
FT SILL, OKLAHOMA

Approximate Value: $1,000,000 TO $5,000,000

DIRECTIONS FOR SUBMITTING BIDS:

ENVELOPES CONTAINING BIDS, GUARANTEE, ETC., MUST BE SEALED, MARKED, AND ADDRESSED AS FOLLOWS:

MARK ENVELOPE "BID UNDER SOLICITATION NO. _____ TO BE OPENED AT 11:00 A.M. _____.

RECEIPT OF AMENDMENTS NOS. _____ ACKNOWLEDGED"

ADDRESS BIDS TO: SEE BLOCK 8 ABOVE

HAND-CARRIED BIDS: HAND-CARRIED BIDS PRIOR TO 10:30 A.M. MUST BE DEPOSITED IN THE "BID DEPOSITORY" IN ROOM 130, 1645 SOUTH 101st EAST AVENUE, TULSA, OK 74128.
HAND-CARRIED BIDS AFTER 10:30 A.M. MUST BE DEPOSITED IN THE "BID DEPOSITORY" IN ROOM 210 PRIOR TO THE TIME STATED FOR OPENING OF BIDS. (FAR 14.401)

11. The Contractor shall begin performance within 10 calendar days and complete it within *** calendar days after receiving [ ] award [X] notice to proceed. This performance period is [X] mandatory, [ ] negotiable. (*See Section 00800 - Special Contract Requirements)

12A. THE CONTRACTOR MUST FURNISH ANY REQUIRED PERFORMANCE AND PAYMENT BONDS *(If "YES", indicate within how mahy calendar days after award in item 12B)*	12B. CALENDAR DAYS
[X] Yes [ ] No	10

13 ADDITIONAL SOLICITATION REQUIREMENTS:

A. Sealed offers in original and no copies to perform the work required are due at the place specified in Item 8 by 2:00 p.m.. local time **28 May 98.** If this is a sealed bid solicitation, offers will be publicly opened at the time. Sealed envelopes containing offers shall be marked to show the offeror's name and address, the solicitation number, and the date and time the offers are due.

B. An offer guarantee is required. **NOTE: Bid guarantee is required with any bid in excess of $25,000.**

C. All offers are subject to the (1) work requirements, and (2) other provisions and clauses incorporated in the solicitation in full text or by reference.

D. Offers providing less than 60 calendar days for Government acceptance after the date offers are due will not be considered and will be rejected.

OFFER *(Must be fully completed by the offeror)*

14. NAME AND ADDRESS OF OFFEROR *(Include ZIP Code)*

CODE FACILITY CODE

15. TELEPHONE NO. *(Include Area Code)*

FAX NO.

16. REMITTANCE ADDRESS *(Include only if different than Item 14)*

CAGE Contractor Established No.
DUNS Contractor Established No.

17. The offeror agrees to perform the work required at the prices specified below in strict accordance with the terms of this solicitation, if this offer is accepted by the Government in writing within _____ calendar days after the date offers are due. *(Insert any number equal to or greater than the minimum requirement stated in Item 13D. Failure to insert any number means the offeror accepts the minimum in item 13D.)*

AMOUNTS > Set forth in the attached Bidding Schedule

18. The Offeror agrees to furnish any required performance and payment bonds.

19. ACKNOWLEDGEMENT OF AMENDMENTS

(*The Offeror acknowledges receipt of amendments to the solicitation -- give number and date of each)*

AMENDMENT NO.								
DATE								

20A. NAME AND TITLE OF PERSON AUTHORIZED TO SIGN OFFER *(Type or Print)*

20B. SIGNATURE

20C. OFFER DATE

AWARD *(To be completed by Government)*

21. ITEMS ACCEPTED:

22. AMOUNT

23. ACCOUNTING AND APPROPRIATION DATA

24. SUBMIT INVOICES TO ADDRESS SHOWN IN *(4 copies unless otherwise specified)* >

ITEM

25. OTHER THAN FULL AND OPEN COMPETITION PURSUANT TO
☐ 10 U.S.C. 2304(c)( ) ☐ 41 U.S.C. 253(c)( )

26. ADMINISTERED BY CODE

27. PAYMENT WILL BE MADE BY

CONTRACTING OFFICER WILL COMPLETE ITEM 28 OR 29 AS APPLICABLE

☐ 28. NEGOTIATED AGREEMENT *(Contractor is required to sign this document and return _____ copies to issuing Office.)* Contractor agrees to furnish and deliver all items or perform all work requirements identified on this form and any continuation sheets for the consideration stated in this contract. The rights and obligations of the parties to this contract shall be governed by (a) this contract award, (b) the solicitation, and (c) the clauses, representations, certifications, and specifications incorporated by reference in or attached to this contract.

☐ 29. AWARD (*Contractor is not required to sign this document.)* Your offer on this solicitation is hereby accepted as to the items listed. This award consummates the contract, which consist of (a) the Government solicitation and your offer, and (b) this contract award, No further contractual document is necessary.

3OA. NAME AND TITLE OF CONTRACTOR OR PERSON AUTHORIZED TO SIGN *(Type or Print)*

31A. NAME OF CONTRACTING OFFICER *(Type or Print)*

30B. SIGNATURE

30C. DATE

31B. UNITED STATES OF AMERICA

BY

31C. AWARD DATE

BIDDING SCHEDULE

Item No.	Description	Quantity	Unit	Unit Price	Amount
1.	**Primary Facility**; complete, including all utilities to the 5-foot line of the building and all other work not listed separately.				
		Sum	Job	xxx	$_____
2.	**Site Work/Supporting Facilities**; complete, including all utilities outside the buildings'5-foot lines, and all other work not listed separately.				
		Sum	Job	xxx	$_____
TOTAL BASE BID ITEMS					**$_____**

BIDDING SCHEDULE NOTES

1. All quantities are estimated where the unit is given as "job".

2. Bidders are instructed to bid on all items.

3. Only one contract for the entire schedule will be awarded under this solicitation.

TABLE OF CONTENTS
SECTION 00100
INSTRUCTIONS, CONDITIONS, AND NOTICES TO BIDDERS

1	52.252-1	SOLICITATION PROVISIONS INCORPORATED BY REFERENCE (FEB 1998)
2	52.204-6	CONTRACTOR IDENTIFICATION NUMBER--DATA UNIVERSAL NUMBERING SYSTEM (DUNS) NUMBER (DEC 1996)
3	52.211-14	NOTICE OF PRIORITY RATING FOR NATIONAL DEFENSE USE (SEP 1990)
4	52.214-1	SOLICITATION DEFINITIONS--SEALED BIDDING (JUL 1987)
5	52.214-3	AMENDMENTS TO INVITATIONS FOR BIDS (DEC 1989)
6	52.214-4	FALSE STATEMENTS IN BIDS (APR 1984)
7	52.214-5	SUBMISSION OF BIDS (MAR 1997)
8	52.214-6	EXPLANATION TO PROSPECTIVE BIDDERS (APR 1984)
9	52.214-7	LATE SUBMISSIONS, MODIFICATIONS, AND WITHDRAWALS OF BIDS (MAY 1997)
10	52.214-18	PREPARATION OF BIDS--CONSTRUCTION (APR 1984)
11	52.214-19	CONTRACT AWARD--SEALED BIDDING--CONSTRUCTION (AUG 1996)
12	52.215-13	SUBCONTRACTOR COST OR PRICING DATA--MODIFICATIONS (OCT 1997)
13	52.222-23	NOTICE OF REQUIREMENT FOR AFFIRMATIVE ACTION TO ENSURE EQUAL EMPLOYMENT OPPORTUNITY (APR 1984)
14	52.225-12 I	NOTICE OF BUY AMERICAN ACT REQUIREMENT-CONSTRUCTION MATERIALS (MAY 1997) --ALTERNATE I (MAY 1997)
15	52.228-1	BID GUARANTEE (SEP 1996)
16	52.228-14	IRREVOCABLE LETTER OF CREDIT (OCT 1997)
17	52.228-15	Performance and Payment Bonds--Construction (SEP 1996)
18	52.232-18	AVAILABILITY OF FUNDS (APR 1984)
19	52.233-2	SERVICE OF PROTEST (AUG 1996)
20	52.236-27	SITE VISIT (CONSTRUCTION) (FEB 1995)
21	52.204-7001	COMMERCIAL AND GOVERNMENT ENTITY (CAGE) CODE REPORTING (DEC 1991)
22	52.0-4010	SMALL BUSINESS SIZE STANDARD (APR 1984) FAR 19.102
23	52.0-4018	ARITHMETIC DISCREPANCIES (EFARS 52.214-5000) (MAR 1995)
24	52.0-4023	BIDDER'S QUALIFICATIONS (APR 1984) (FAR 9.1)
25	52.0-4025	PERFORMANCE OF WORK BY CONTRACTOR
26	52.0-4027	NOTICE
27	52.0-4045	REQUIRED BID BOND AMOUNT

SECTION 00100

INSTRUCTIONS, CONDITIONS, AND NOTICES TO BIDDERS

1 52.252-1 SOLICITATION PROVISIONS INCORPORATED BY REFERENCE (FEB 1998)

This solicitation incorporates one or more solicitation provisions by reference, with the same force and effect as if they were given in full text. Upon request, the Contracting Officer will make their full text available. The offeror is cautioned that the listed provisions may include blocks that must be completed by the offeror and submitted with its blocks that must be completed by the offeror and submitted with its quotation or offer. In lieu of submitting the full text of those provisions, the offeror may identify the provision by paragraph identifier and provide the appropriate information with its quotation or offer. Also, the full text of a solicitation provision may be accessed electronically at this/these address(es):

2 52.204-6 CONTRACTOR IDENTIFICATION NUMBER--DATA UNIVERSAL NUMBERING SYSTEM (DUNS) NUMBER (DEC 1996)

(a) Contractor Identification Number, as used in this provision, means "Data Universal Numbering System (DUNS) number," which is a nine-digit number assigned by Dun and Bradstreet Information Services.

(b) Contractor identification is essential for complying with statutory contract reporting requirements. Therefore, the offeror is requested to enter, in the block with its name and address on the Standard Form 33 or similar document, the annotation "DUNS" followed by the DUNS number which identifies the offeror's name and address exactly as stated in the offer.

(c) If the offeror does not have a DUNS number, it should contact Dun and Bradstreet directly to obtain one. A DUNS number will be provided immediately by telephone at no charge to the offeror. For information on obtaining a DUNS number, the offeror should call Dun and Bradstreet at 1-800-333-0505. The offeror should be prepared to provide the following information:

(1) Company name.
(2) Company address.
(3) Company telephone number.
(4) Line of business.
(5) Chief executive officer/key manager.
(6) Date the company was started.
(7) Number of people employed by the company.
(8) Company affiliation.

(d) Offerors located outside the United States may obtain the location and phone number of the local Dun and Bradstreet Information Services office from the Internet Home Page at http://www.dbisna.com/dbis/customer/custlist.htm. If an offeror is unable to locate a local service center, it may send an e-mail to Dun and Bradstreet at globalinfo@dbisma.com.

(End of provision)

3 52.211-14 NOTICE OF PRIORITY RATING FOR NATIONAL DEFENSE USE (SEP 1990)

Any contract awarded as a result of this solicitation will be /_____ / DX rated order; /X/ DO rated order certified for national defense use

under the Defense Priorities and Allocations System (DPAS) (15 CFR 700), and the Contractor will be required to follow all of the requirements of this regulation.

(End of provision)

4 52.214-1 SOLICITATION DEFINITIONS--SEALED BIDDING (JUL 1987)

"Government" means United States Government.
"Offer" means "bid" in sealed bidding.
"Solicitation" means an invitation for bids in sealed bidding.

(End of provision)

5 52.214-3 AMENDMENTS TO INVITATIONS FOR BIDS (DEC 1989)

(a) If this solicitation is amended, then all terms and conditions which are not modified remain unchanged.

(b) Bidders shall acknowledge receipt of any amendment to this solicitation (1) by signing and returning the amendment, (2) by identifying the amendment number and date in the space provided for this purpose on the form for submitting a bid, (3) by letter or telegram, or (4) by facsimile, if facsimile bids are authorized in the solicitation. The Government must receive the acknowledgment by the time and at the place specified for receipt of bids.

(End of provision)

6 52.214-4 FALSE STATEMENTS IN BIDS (APR 1984)

Bidders must provide full, accurate, and complete information as required by this solicitation and its attachments. The penalty for making false statements in bids is prescribed in 18 U.S.C. 1001.

(End of provision)
(R 2-201(b)(xiii))
(R 1-2.201(a)(11))

7 52.214-5 SUBMISSION OF BIDS (MAR 1997)

(a) Bids and bid modifications shall be submitted in sealed envelopes or packages (unless submitted by electronic means) (1) addressed to the office specified in the solicitation, and (2) showing the time and date specified for receipt, the solicitation number, and the name and address of the bidder.

(b) Bidders using commercial carrier services shall ensure that the bid is addressed and marked on the outermost envelope or wrapper as prescribed in subparagraphs (a) (1) and (2) of this provision when delivered to the office specified in the solicitation.

(c) Telegraphic bids will not be considered unless authorized by the solicitation; however, bids may be modified or withdrawn by written or telegraphic notice.

(d) Facsimile bids, modifications, or withdrawals, will not be considered unless authorized by the solicitation.

(e) Bids submitted by electronic commerce shall be considered only if the electronic commerce method was specifically stipulated or permitted by the solicitation.

(End of provision)

8 52.214-6 EXPLANATION TO PROSPECTIVE BIDDERS (APR 1984)

Any prospective bidder desiring an explanation or interpretation of the solicitation, drawings, specifications, etc., must request it in writing soon enough to allow a reply to reach all prospective bidders before the submission of their bids. Oral explanations or instructions given before the award of a contract will not be binding. Any information given a prospective bidder concerning a solicitation will be furnished promptly to all other prospective bidders as an amendment to the solicitation, if that information is necessary in submitting bids or if the lack of it would be prejudicial to other prospective bidders.

(End of provision)

(R SF 33A, Para 3, 1978 JAN)

9 52.214-7 LATE SUBMISSIONS, MODIFICATIONS, AND WITHDRAWALS OF BIDS (MAY 1997)

(a) Any bid received at the office designated in the solicitation after the exact time specified for receipt will not be considered unless it is received before award is made and it--

(1) Was sent by registered or certified mail not later than the fifth calendar day before the date specified for receipt of bids (e.g., a bid submitted in response to a solicitation requiring receipt of bids by the 20th of the month must have been mailed by the 15th);

(2) Was sent by mail (or telegram or facsimile, if authorized) or hand-carried (including delivery by a commercial carrier) if it is determined by the Government that the late receipt was due primarily to Government mishandling after receipt at the Government installation;

(3) Was sent by U.S. Postal Service Express Mail Next Day Service-Post Office To Addressee, not later than 5:00 P.M. at the place of mailing two working days prior to the date specified for receipt of bids. The term "working days" excludes weekends and U.S. Federal holidays; or

(4) Was transmitted through an electronic commerce method authorized by the solicitation and was received at the initial point of entry to the Government infrastructure not later than 5:00 p.m. one working day prior to the date specified for receipt of bids.

(b) Any modification or withdrawal of a bid is subject to the same conditions as in paragraph (a) of this provision.

(c) The only acceptable evidence to establish the date of mailing of a late bid, modification, or withdrawal sent either by registered or certified mail is the U.S. or Canadian Postal Service postmark both on the envelope or wrapper and on the original receipt from the U.S. or Canadian Postal Service. Both postmarks must show a legible date or the bid, modification, or withdrawal shall be processed as if mailed late. "Postmark" means a printed, stamped, or otherwise placed impression (exclusive of a postage meter machine impression) that is readily identifiable without further action as having been supplied and affixed by employees of the U.S. or Canadian Postal Service on the date of mailing. Therefore, bidders should request the postal clerk to place a legible hand cancellation bull's-eye postmark on both the receipt and the envelope or wrapper.

(d) The only acceptable evidence to establish the time of receipt at the Government installation is the time/date stamp of that installation on the bid wrapper or other documentary evidence of receipt maintained by the installation.

(e) The only acceptable evidence to establish the date of mailing of a late bid, modification, or withdrawal sent by U.S. Postal Service Express Mail Next Day Service-Post Office to Addressee is the date entered by the

post office receiving clerk on the "Express Mail Next Day Service-Post Office to Addressee" label and the postmark on the envelope or wrapper and on the original receipt from the U.S. Postal Service. "Postmark" has the same meaning as defined in paragraph (c) of this provision, excluding postmarks of the Canadian Postal Service. Therefore, bidders should request the postal clerk to place a legible hand cancellation bull's-eye postmark on both the receipt and the envelope or wrapper.

(f) Notwithstanding paragraph (a) of this provision, a late modification of an otherwise successful bid that makes its terms more favorable to the Government will be considered at any time it is received and may be accepted.

(g) Bids may be withdrawn by written notice or telegram (including mailgram) received at any time before the exact time set for receipt of bids. If the solicitation authorizes facsimile bids, bids may be withdrawn via facsimile received at any time before the exact time set for receipt of bids, subject to the conditions specified in the provision entitled "Facsimile Bids." A bid may be withdrawn in person by a bidder or its authorized representative if, before the exact time set for receipt of bids, the identity of the person requesting withdrawal is established and the person signs a receipt for the bid.

(h) If an emergency or unanticipated event interrupts normal Government processes so as to cause postponement of the scheduled bid opening, and urgent Government requirements preclude amendment of the solicitation or other notice of an extension of the opening date, the time specified for receipt of bids will be deemed to be extended to the same time of day specified in the solicitation on the first work day on which normal Government processes resume.

(End of provision)

10 52.214-18 PREPARATION OF BIDS--CONSTRUCTION (APR 1984)

(a) Bids must be (1) submitted on the forms furnished by the Government or on copies of those forms, and (2) manually signed. The person signing a bid must initial each erasure or change appearing on any bid form.

(b) The bid form may require bidders to submit bid prices for one or more items on various bases, including--

(1) Lump sum bidding;
(2) Alternate prices;
(3) Units of construction; or
(4) Any combination of subparagraphs (1) through (3) above.

(c) If the solicitation requires bidding on all items, failure to do so will disqualify the bid. If bidding on all items is not required, bidders should insert the words "no bid" in the space provided for any item on which no price is submitted.

(d) Alternate bids will not be considered unless this solicitation authorizes their submission.

(End of provision)
(R SF 22, Para 5, 1978 FEB)

11 52.214-19 CONTRACT AWARD--SEALED BIDDING--CONSTRUCTION (AUG 1996)

(a) The Government will evaluate bids in response to this solicitation without discussions and will award a contract to the responsible bidder whose bid, conforming to the solicitation, will be most advantageous to the Government, considering only price and the price-related factors specified elsewhere in the solicitation.

(b) The Government may reject any or all bids, and waive informalities or minor irregularities in bids received.

(c) The Government may accept any item or combination of items, unless doing so is precluded by a restrictive limitation in the solicitation or the bid.

(d) The Government may reject a bid as nonresponsive if the prices bid are materially unbalanced between line items or subline items. A bid is materially unbalanced when it is based on prices significantly less than cost for some work and prices which are significantly overstated in relation to cost for other work, and if there is a reasonable doubt that the bid will result in the lowest overall cost to the Government even though it may be the low evaluated bid, or if it is so unbalanced as to be tantamount to allowing an advance payment.

(End of provision)

12 52.215-13 SUBCONTRACTOR COST OR PRICING DATA--MODIFICATIONS (OCT 1997)

(a) The requirements of paragraphs (b) and (c) of this clause shall--

(1) Become operative only for any modification to this contract involving a pricing adjustment expected to exceed the threshold for submission of cost or pricing data at FAR 15.403-4; and

(2) Be limited to such modifications.

(b) Before awarding any subcontract expected to exceed the threshold for submission of cost or pricing data at FAR 15.403-4, on the date of agreement on price or the date of award, whichever is later; or before pricing any subcontract modification involving a pricing adjustment expected to exceed the threshold for submission of cost or pricing data at FAR 15.403-4, the Contractor shall require the subcontractor to submit cost or pricing data (actually or by specific identification in writing), unless an exception under FAR 15.403-1 applies.

(c) The Contractor shall require the subcontractor to certify in substantially the form prescribed in FAR 15.406-2 that, to the best of its knowledge and belief, the data submitted under paragraph (b) of this clause were accurate, complete, and current as of the date of agreement on the negotiated price of the subcontract or subcontract modification.

(d) The Contractor shall insert the substance of this clause, including this paragraph (d), in each subcontract that exceeds the threshold for submission of cost or pricing data at FAR 15.403-4 on the date of agreement on price or the date of award, whichever is later.

(End of clause)

13 52.222-23 NOTICE OF REQUIREMENT FOR AFFIRMATIVE ACTION TO ENSURE EQUAL EMPLOYMENT OPPORTUNITY (APR 1984)

(a) The offeror's attention is called to the Equal Opportunity clause and the Affirmative Action Compliance Requirements for Construction clause of this solicitation.

(b) The goals for minority and female participation, expressed in percentage terms for the Contractor's aggregate workforce in each trade on all construction work in the covered area, are as follows:

Goals for minority participation for each trade	Goals for female participation for each trade
14.8%	6.9%

These goals are applicable to all the Contractor's construction work performed in the covered area. If the Contractor performs construction work in a geographical area located outside of the covered area, the Contractor shall apply the goals established for the geographical area where the work is actually performed. Goals are published periodically in the Federal Register in notice form, and these notices may be obtained from any Office of Federal Contract Compliance Programs office.

(c) The Contractor's compliance with Executive Order 11246, as amended, and the regulations in 41 CFR 60-4 shall be based on (1) its implementation of the Equal Opportunity clause, (2) specific affirmative action obligations required by the clause entitled "Affirmative Action Compliance Requirements for Construction," and (3) its efforts to meet the goals. The hours of minority and female employment and training must be substantially uniform throughout the length of the contract, and in each trade. The Contractor shall make a good faith effort to employ minorities and women evenly on each of its projects. The transfer of minority or female employees or trainees from Contractor to Contractor, or from project to project, for the sole purpose of meeting the Contractor's goals shall be a violation of the contract, Executive Order 11246, as amended, and the regulations in 41 CFR 60-4. Compliance with the goals will be measured against the total work hours performed.

(d) The Contractor shall provide written notification to the Director, Office of Federal Contract Compliance Programs, within 10 working days following award of any construction subcontract in excess of $10,000 at any tier for construction work under the contract resulting from this solicitation. The notification shall list the--

(1) Name, address, and telephone number of the subcontractor;
(2) Employer's identification number of the subcontractor;
(3) Estimated dollar amount of the subcontract;
(4) Estimated starting and completion dates of the subcontract; and
(5) Geographical area in which the subcontract is to be performed.

(e) As used in this Notice, and in any contract resulting from this solicitation, the "covered area" is Oklahoma, Comanche, Lawton.

(End of provision)
(R 7-2003.14(d) 1978 SEP)

14 52.225-12 I NOTICE OF BUY AMERICAN ACT REQUIREMENT-CONSTRUCTION MATERIALS (MAY 1997) --ALTERNATE I (MAY 1997)

(a) Offerors are required to comply with the requirements of Federal Acquisition Regulation (FAR) clause 52.225-5, Buy American Act Construction Materials, of this solicitation. The terms "construction material" and "domestic construction material," as used in this provision, have the meanings set forth in FAR clause 52.225-5.

(b) An offeror requesting a determination regarding the inapplicability of the Buy American Act shall submit such request with its offer, including the information and applicable supporting data required by paragraphs (c) and (d) of FAR clause 52.225-5.

(c) Evaluation of offers.

(1) For evaluation of offers, (unless agency regulations specify a higher percentage) the Government will add to the offered price 6 percent of the cost of any foreign construction material proposed for exception

from the requirements of the Buy American Act based on claimed unreasonable cost of domestic construction materials in accordance with paragraph (b)(3)(i) of FAR clause 52.225-5.

(2) If the evaluation of offers results in a tie between an offer including such foreign construction material excepted on the basis of unreasonable cost, as evaluated, and an offer including solely domestic construction material or other foreign construction material listed in the solicitation at paragraph (b)(2) of FAR clause 52.225-5, or subsequently excepted in accordance with paragraphs (b)(3) (ii) or (iii) of FAR clause 52.225-5, award shall be made to the offeror that submitted the latter offer.

(d) Alternate offers.

(1) When an offer includes foreign construction material not listed by the Government in the solicitation at paragraph (b)(2) of FAR clause 52.225-5, offerors also may submit alternate offers based on use of equivalent domestic construction material.

(2) If alternate offers are submitted, a separate Standard Form 1442 shall be submitted for each alternate offer, and a separate price comparison table, prepared in accordance with paragraphs (c) and (d) of FAR clause 52.225-5, shall be submitted for each offer that is based on the use of any foreign construction material for which the Government has not yet determined an exception to apply.

(3) If the Government determines that a particular exception requested under paragraph (c) of FAR clause 52.225-5 does not apply, the Government will evaluate only those offers based on use of the equivalent domestic construction material, and the offeror shall be required to furnish such domestic construction material.

(i) In sealed bid procurements, any offer based on use of that particular foreign construction material shall be rejected as nonresponsive.

(ii) In negotiated procurements, any offer based on use of that particular foreign construction material may not be accepted unless revised during negotiations.

(End of provision)

15 52.228-1 BID GUARANTEE (SEP 1996)

(a) Failure to furnish a bid guarantee in the proper form and amount, by the time set for opening of bids, may be cause for rejection of the bid.

(b) The bidder shall furnish a bid guarantee in the form of a firm commitment, e.g., bid bond supported by good and sufficient surety or sureties acceptable to the Government, postal money order, certified check, cashier's check, irrevocable letter of credit, or, under Treasury Department regulations, certain bonds or notes of the United States. The Contracting Officer will return bid guarantees, other than bid bonds, (1) to unsuccessful bidders as soon as practicable after the opening of bids, and (2) to the successful bidder upon execution of contractual documents and bonds (including any necessary coinsurance or reinsurance agreements), as required by the bid as accepted.

(c) The amount of the bid guarantee shall be twenty (20) percent of the bid price or NTE $3.0 million , whichever is less.

(d) If the successful bidder, upon acceptance of its bid by the Government within the period specified for acceptance, fails to execute all contractual documents or furnish executed bond(s) within 10 days after receipt of the forms by the bidder, the Contracting Officer may terminate the contract for default.

(e) In the event the contract is terminated for default, the bidder is liable for any cost of acquiring the work that exceeds the amount of its bid, and the bid guarantee is available to offset the difference.
(End of provision)

16 52.228-14 IRREVOCABLE LETTER OF CREDIT (OCT 1997)

(a) "Irrevocable letter of credit" (ILC), as used in this clause, means a written commitment by a federally insured financial institution to pay all or part of a stated amount of money, until the expiration date of the letter, upon presentation by the Government (the beneficiary) of a written demand therefor. Neither the financial institution nor the offeror/Contractor can revoke or condition the letter of credit.

(b) If the offeror intends to use an ILC in lieu of a bid bond, or to secure other types of bonds such as performance and payment bonds, the letter of credit and letter of confirmation formats in paragraphs (e) and (f) of this clause shall be used.

(c) The letter of credit shall be irrevocable, shall require presentation of no document other than a written demand and the ILC (including confirming letter, if any), shall be issued/confirmed by an acceptable federally insured financial institution as provided in paragraph (d) of this clause, and--

(1) If used as a bid guarantee, the ILC shall expire no earlier than 60 days after the close of the bid acceptance period;

(2) If used as an alternative to corporate or individual sureties as security for a performance or payment bond, the offeror/Contractor may submit an ILC with an initial expiration date estimated to cover the entire period for which financial security is required or may submit an ILC with an initial expiration date that is a minimum period of one year from the date of issuance. The ILC shall provide that, unless the issuer provides the beneficiary written notice of non-renewal at least 60 days in advance of the current expiration date, the ILC is automatically extended without amendment for one year from the expiration date, or any future expiration date, until the period of required coverage is completed and the Contracting Officer provides the financial institution with a written statement waiving the right to payment. The period of required coverage shall be:

(i) For contracts subject to the Miller Act, the later of--

(A) One year following the expected date of final payment;

(B) For performance bonds only, until completion of any warranty period; or

(C) For payment bonds only, until resolution of all claims filed against the payment bond during the one-year period following final payment.

(ii) For contracts not subject to the Miller Act, the later of--

(A) 90 days following final payment; or

(B) For performance bonds only, until completion of any warranty period.

(d) Only federally insured financial institutions rated investment grade or higher shall issue or confirm the ILC. The offeror/Contractor shall provide the Contracting Officer a credit rating that indicates the financial institution has the required rating(s) as of the date of issuance of the ILC. Unless the financial institution issuing the ILC had letter of credit business of at least $25 million in the past year, ILCs over $5 million must be confirmed by another acceptable financial institution that had letter of credit business of at least $25 million in the past year.

(e) The following format shall be used by the issuing financial institution to create an ILC:

(Issuing Financial Institution's Letterhead or Name and Address)

Issue Date_____

Irrevocable Letter of Credit No._____

Account party's name_____

Account party's address_____

For Solicitation No._____

(For reference only)

TO: (U.S. Government agency)

(U.S. Government agency's address)

1. We hereby establish this irrevocable and transferable Letter of Credit in your favor for one or more drawings up to United States $_____. This Letter of Credit is payable at (issuing financial institution's and, if any, confirming financial institution's) office at (issuing financial institution's address and, if any, confirming financial institution's address) and expires with our close of business on _____, or any automatically extended expiration date.

2. We hereby undertake to honor your or the transferee's sight draft(s) drawn on the issuing or, if any, the confirming financial institution, for all or any part of this credit if presented with this Letter of Credit and confirmation, if any, at the office specified in paragraph 1 of this Letter of Credit on or before the expiration date or any automatically extended expiration date.

3. (This paragraph is omitted if used as a bid guarantee, and subsequent paragraphs are renumbered.) It is a condition of this Letter of Credit that it is deemed to be automatically extended without amendment for one year from the expiration date hereof, or any future expiration date, unless at least 60 days prior to any expiration date, we notify you or the transferee by registered mail, or other receipted means of delivery, that we elect not to consider this Letter of Credit renewed for any such additional period. At the time we notify you, we also agree to notify the account party (and confirming financial institution, if any) by the same means of delivery.

4. This Letter of Credit is transferable. Transfers and assignments of proceeds are to be effected without charge to either the beneficiary or the transferee/assignee of proceeds. Such transfer or assignment shall be only at the written direction of the Government (the beneficiary) in a form satisfactory to the issuing financial institution and the confirming financial institution, if any.

5. This Letter of Credit is subject to the Uniform Customs and Practice (UCP) for Documentary Credits, 1993 Revision, International Chamber of Commerce Publication No. 500, and to the extent not inconsistent therewith, to the laws of _____ (state of confirming financial institution, if any, otherwise state of issuing financial institution).

6. If this credit expires during an interruption of business of this financial institution as described in Article 17 of the UCP, the financial institution specifically agrees to effect payment if this credit is drawn against within 30 days after the resumption of our business.

Sincerely,

(Issuing financial institution)

(f) The following format shall be used by the financial institution to confirm an ILC:

(Confirming Financial Institution's Letterhead or Name and Address)

Date _____ 19_____

Our Letter of Credit Advice Number_____

Beneficiary:_____
(U.S. Government agency)
Issuing Financial Institution:_____
Issuing Financial Institution's LC No.:_____

Gentlemen:

1. We hereby confirm the above indicated Letter of Credit, the original of which is attached, issued by _____ (name of issuing financial institution) for drawings of up to United States dollars _____/U.S. $_____ and expiring with our close of business on _____ (the expiration date), or any automatically extended expiration date.

2. Draft(s) drawn under the Letter of Credit and this Confirmation are payable at our office located at _____.

3. We hereby undertake to honor sight draft(s) drawn under and presented with the Letter of Credit and this Confirmation at our offices as specified herein.

4. (This paragraph is omitted if used as a bid guarantee, and subsequent paragraphs are renumbered.) It is a condition of this confirmation that it be deemed automatically extended without amendment for one year from the expiration date hereof, or any automatically extended expiration date, unless:

(a) At least 60 days prior to any such expiration date, we shall notify the Contracting Officer, or the transferee and the issuing financial institution, by registered mail or other receipted means of delivery, that we elect not to consider this confirmation extended for any such additional period; or

(b) The issuing financial institution shall have exercised its right to notify you or the transferee, the account party, and ourselves, of its election not to extend the expiration date of the Letter of Credit.

5. This confirmation is subject to the Uniform Customs and Practice (UCP) for Documentary Credits, 1993 Revision, International Chamber of Commerce Publication No. 500, and to the extent not inconsistent therewith, to the laws of _____ (state of confirming financial institution).

6. If this confirmation expires during an interruption of business of this financial institution as described in Article 17 of the UCP, we specifically agree to effect payment if this credit is drawn against within 30 days after the resumption of our business.

Sincerely,
(Confirming financial institution)

(g) The following format shall be used by the Contracting Officer for a sight draft to draw on the Letter of Credit:

SIGHT DRAFT

_____
(City, State)

_____, 19_____

_____
(Name and address of financial institution)

Pay to the order of_____
(Beneficiary Agency)

the sum of United States $ _____

This draft is drawn under_____

Irrevocable Letter of Credit No._____

By: _____
(Beneficiary Agency)

(End of clause)

17 52.228-15 Performance and Payment Bonds--Construction (SEP 1996)

(a) Definitions. As used in this clause--

Contract price means the award price of the contract or, for requirements contracts, the price payable for the estimated quantity; or for indefinite-delivery type contracts, the price payable for the specified minimum quantity.

(b) Unless the resulting contract price is $100,000 or less, the successful offeror shall be required to furnish performance and payment bonds to the Contracting Officer as follows:

(1) Performance Bonds (Standard Form 25):

(i) The penal amount of performance bonds shall be 100 percent of the original contract price.

(ii) The Government may require additional performance bond protection when the contract price is increased. The increase in protection shall generally equal 100 percent of the increase in contract price.

(iii) The Government may secure additional protection by directing the Contractor to increase the penal amount of the existing bond or to obtain an additional bond.

(2) Payment Bonds (Standard Form 25-A):

(i) The penal amount of payment bonds shall equal--

(A) 50 percent of the contract price if the contract price is not more than $1 million;

(B) 40 percent of the contract price if the contract price is more than $1 million but not more than $5 million; or

(C) $2.5 million if the contract price is more than $5 million.

(ii) If the original contract price is $5 million or less, the Government may require additional protection if the contract price is increased. The penal amount of the total protection shall meet the requirement of subparagraph (b)(2)(i) of this clause.

(iii) The Government may secure additional protection by directing the Contractor to increase the penal sum of the existing bond or to obtain an additional bond.

(c) The Contractor shall furnish all executed bonds, including any necessary reinsurance agreements, to the Contracting Officer, within the time period specified in the Bid Guarantee provision of the solicitation, or otherwise specified by the Contracting Officer, but in any event, before starting work.

(d) The bonds shall be in the form of firm commitment, supported by corporate sureties whose names appear on the list contained in Treasury Department Circular 570, individual sureties, or by other acceptable security such as postal money order, certified check, cashier's check, irrevocable letter of credit, or, in accordance with Treasury Department regulations, certain bonds or notes of the United States. Treasury Circular 570 is published in the Federal Register, or may be obtained from the U.S. Department of Treasury, Financial Management Service, Surety Bond Branch, 401 14th Street, NW., 2nd Floor, West Wing, Washington, DC 20227.

(End of clause)

18 52.232-18 AVAILABILITY OF FUNDS (APR 1984)

Funds are not presently available for this contract. The Government's obligation under this contract is contingent upon the availability of appropriated funds from which payment for contract purposes can be made. No legal liability on the part of the Government for any payment may arise

until funds are made available to the Contracting Officer for this contract and until the Contractor receives notice of such availability, to be confirmed in writing by the Contracting Officer.

(End of clause)

(SS 7-104.91(a) 1962 SEP)

19 52.233-2 SERVICE OF PROTEST (AUG 1996)

(a) Protests, as defined in section 33.101 of the Federal Acquisition Regulation, that are filed directly with an agency, and copies of any protests that are filed with the General Accounting Office (GAO), shall be served on the Contracting Officer (addressed as follows) by obtaining written and dated acknowledgment of receipt from

Chief, Contracting Division
Tulsa District Corps of Engineers
P.O. Box 61
Tulsa, OK 74121-0061

(b) The copy of any protest shall be received in the office designated above within one day of filing a protest with the GAO.

(End of provision)

20 52.236-27 SITE VISIT (CONSTRUCTION) (FEB 1995)

(a) The clauses at 52.236-2, Differing Site Conditions, and 52.236-3, Site Investigation and Conditions Affecting the Work, will be included in any contract awarded as a result of this solicitation. Accordingly, offerors or quoters are urged and expected to inspect the site where the work will be performed.

(b) Site visits may be arranged during normal duty hours by contacting: Name: Rick West, Resident Engineer Address: Bldg. 1945 P.O. Box 33159 Fort Sill, OK 73503-0159 Telephone: 580-355-6148

(End of provision)

21 52.204-7001 COMMERCIAL AND GOVERNMENT ENTITY (CAGE) CODE REPORTING (DEC 1991)

(a) The Offeror is requested to enter its CAGE code on its offer in the block with its name and address. The CAGE code entered must be for that name and address. Enter CAGE before the number.

(b) If the Offeror does not have a CAGE code, it may ask the Contracting Officer to request one from the Defense Logistics Services Center (DLSC). The Contracting Officer will--

(1) Ask the Contractor to complete section B of a DD Form 2051, Request for Assignment of a Commercial and Government Entity (CAGE) Code;

(2) Complete section A and forward the form to DLSC; and

(3) Notify the Contractor of its assigned CAGE code.

(c) Do not delay submission of the offer pending receipt of a CAGE code.

(End of provision)

22 52.0-4010 SMALL BUSINESS SIZE STANDARD (APR 1984) FAR 19.102

The size standard of Small Business Concerns for this procurement is a concern whose average annual sales or receipts for its preceding three fiscal years does not exceed $17.0 million. Standard Industrial Classification (SIC): 1541.

(End of Clause)

23 52.0-4018 ARITHMETIC DISCREPANCIES (EFARS 52.214-5000) (MAR 1995)

(a) For the purpose of initial evaluation of bids, the following will be utilized in resolving arithmetic discrepancies found on the face of the bidding schedule as submitted by bidders:

(1) Obviously misplaced decimal points will be corrected;

(2) Discrepancy between unit price and extended price, the unit price will govern;

(3) Apparent errors in extension of unit prices will be corrected; and

(4) Apparent errors in addition of lump-sum and extended prices will be corrected.

(b) For the purpose of bid evaluation, the Government will proceed on the assumption that the bidder intends his bid to be evaluated on the basis of the unit prices, the totals arrived at by resolution of arithmetic discrepancies as provided above and the bid will be so reflected on the abstract of bids.

(c) These correction procedures shall not be used to resolve any ambiguity concerning which bid is low.

24 52.0-4023 BIDDER'S QUALIFICATIONS (APR 1984) (FAR 9.1)

Before a bid is considered for award, the bidder may be requested by the Government to submit a statement regarding his previous experience in performing comparable work, his business and tehcnical organization, financial resources, and plant available to be used in performing the work.

25 52.0-4025 PERFORMANCE OF WORK BY CONTRACTOR

Unless he has submitted such description with his bid, the successful bidder must furnish the Contracting Officer within l4 calendar days after award a description of the work which he intends to perform with his own organization (e.g., earthwork, paving, brickwork, or roofing), the percentage of the total work this represents, and the estimated cost thereof. (See Section 00800 clause entitled "Performance of Work by Contractor.")

26 52.0-4027 NOTICE

If the work called for by this Invitation is located on a military installation, bidders should check with post/base security to learn if potential employees will be allowed on base to seek employment.

27 52.0-4045 REQUIRED BID BOND AMOUNT

Each bidder shall submit with his bid a Bid Bond (Standard Form 24) with good and sufficient surety or sureties acceptable to the Government, or other security as provided in FAR Clause 52.228-0001, Bid Guarantee, contained elsewhere in this solicitation, in the form of twenty (20) percent of the bid price or three million dollars ($3,000,000) whichever is lesser. The bid bond penalty may be expressed in terms of a percentage of the bid price or may be expressed in dollars and cents.

(End of Clause)

END OF SECTION 00100

TABLE OF CONTENTS
SECTION 00600
REPRESENTATIONS & CERTIFICATIONS

1	52.203-2	CERTIFICATE OF INDEPENDENT PRICE DETERMINATION (APR 1985)
2	52.203-11	CERTIFICATION AND DISCLOSURE REGARDING PAYMENTS TO INFLUENCE CERTAIN FEDERAL TRANSACTIONS (APR 1991)
3	52.204-3	TAXPAYER IDENTIFICATION (JUN 1997)
4	52.209-5	CERTIFICATION REGARDING DEBARMENT, SUSPENSION, PROPOSED DEBARMENT, AND OTHER RESPONSIBILITY MATTERS (MAR 1996)
5	52.214-2	TYPE OF BUSINESS ORGANIZATION--SEALED BIDDING (JUL 1987)
6	52.219-1	SMALL BUSINESS PROGRAM REPRESENTATIONS (JAN 1997)
7	52.219-2	EQUAL LOW BIDS (OCT 1995)
8	52.219-19	SMALL BUSINESS CONCERN REPRESENTATION FOR THE SMALL BUSINESS COMPETITIVENESS DEMONSTRATION PROGRAM (JAN 1997)
9	52.222-21	CERTIFICATION OF NONSEGREGATED FACILITIES (APR 1984)
10	52.223-1	CLEAN AIR AND WATER CERTIFICATION (APR 1984)
11	52.223-3	HAZARDOUS MATERIAL IDENTIFICATION AND MATERIAL SAFETY DATA (JAN 1997)
12	52.223-13	CERTIFICATION OF TOXIC CHEMICAL RELEASE REPORTING (OCT 1996)
13	52.209-7001	DISCLOSURE OF OWNERSHIP OR CONTROL BY THE GOVERNMENT OF A TERRORIST COUNTRY (SEP 1994)
14	52.219-7000	SMALL DISADVANTAGED BUSINESS CONCERN REPRESENTATION (DoD CONTRACTS) (JUN 1997)
15	52.225-7031	SECONDARY ARAB BOYCOTT OF ISRAEL (JUN 1992)
16	52.247-7022	REPRESENTATION OF EXTENT OF TRANSPORTATION BY SEA (AUG 1992)

SECTION 00600

REPRESENTATIONS & CERTIFICATIONS

1 52.203-2 CERTIFICATE OF INDEPENDENT PRICE DETERMINATION (APR 1985)

(a) The offeror certifies that--

(1) The prices in this offer have been arrived at independently, without, for the purpose of restricting competition, any consultation, communication, or agreement with any other offeror or competitor relating to (i) those prices, (ii) the intention to submit an offer, or (iii) the methods or factors used to calculate the prices offered;

(2) The prices in this offer have not been and will not be knowingly disclosed by the offeror, directly or indirectly, to any other offeror or competitor before bid opening (in the case of a sealed bid solicitation) or contract award (in the case of a negotiated solicitation) unless otherwise required by law; and

(3) No attempt has been made or will be made by the offeror to induce any other concern to submit or not to submit an offer for the purpose of restricting competition.

(b) Each signature on the offer is considered to be a certification by the signatory that the signatory--

(1) Is the person in the offeror's organization responsible for determining the prices being offered in this bid or proposal, and that the signatory has not participated and will not participate in any action contrary to subparagraphs (a)(1) through (a)(3) above; or

(2)(i) Has been authorized, in writing, to act as agent for the following principals in certifying that those principals have not participated, and will not participate in any action contrary to subparagraphs (a)(1) through (a)(3) above _____
_____
(insert full name of person(s) in the offeror's organization responsible for determining the prices offered in this bid or proposal, and the title of his or her position in the offeror's organization);

(ii) As an authorized agent, does certify that the principals named in subdivision (b)(2)(i) above have not participated, and will not participate, in any action contrary to subparagraphs (a)(1) through (a)(3) above; and

(iii) As an agent, has not personally participated, and will not participate, in any action contrary to subparagraphs (a)(1) through (a)(3) above.

(c) If the offeror deletes or modifies subparagraph (a)(2) above, the offeror must furnish with its offer a signed statement setting forth in detail the circumstances of the disclosure.

(End of provision)

2 52.203-11 CERTIFICATION AND DISCLOSURE REGARDING PAYMENTS TO INFLUENCE CERTAIN FEDERAL TRANSACTIONS (APR 1991)

(a) The definitions and prohibitions contained in the clause, at FAR 52.203-12, Limitation on Payments to Influence Certain Federal

Transactions, included in this solicitation, are hereby incorporated by reference in paragraph (b) of this certification.

(b) The offeror, by signing its offer, hereby certifies to the best of his or her knowledge and belief that on or after December 23, 1989--

(1) No Federal appropriated funds have been paid or will be paid to any person for influencing or attempting to influence an officer or employee of any agency, a Member of Congress, an officer or employee of Congress, or an employee of a Member of Congress on his or her behalf in connection with the awarding of any Federal contract, the making of any Federal grant, the making of any Federal loan, the entering into of any cooperative agreement, and the extension, continuation, renewal, amendment or modification of any Federal contract, grant, loan, or cooperative agreement;

(2) If any funds other than Federal appropriated funds (including profit or fee received under a covered Federal transaction) have been paid, or will be paid, to any person for influencing or attempting to influence an officer or employee of any agency, a Member of Congress, an officer or employee of Congress, or an employee of a Member of Congress on his or her behalf in connection with this solicitation, the offeror shall complete and submit, with its offer, OMB standard form LLL, Disclosure of Lobbying Activities, to the Contracting Officer; and

(3) He or she will include the language of this certification in all subcontract awards at any tier and require that all recipients of subcontract awards in excess of $100,000 shall certify and disclose accordingly.

(c) Submission of this certification and disclosure is a prerequisite for making or entering into this contract imposed by section 1352, title 31, United States Code. Any person who makes an expenditure prohibited under this provision or who fails to file or amend the disclosure form to be filed or amended by this provision, shall be subject to a civil penalty of not less than $10,000, and not more than $100,000, for each such failure.

(End of provision)

3 52.204-3 TAXPAYER IDENTIFICATION (JUN 1997)

(a) Definitions.

"Common parent," as used in this solicitation provision, means that corporate entity that owns or controls an affiliated group of corporations that files its Federal income tax returns on a consolidated basis, and of which the offeror is a member.

"Corporate status," as used in this solicitation provision, means a designation as to whether the offeror is a corporate entity, an unincorporated entity (e.g., sole proprietorship or partnership), or a corporation providing medical and health care services.

"Taxpayer Identification Number (TIN)," as used in this solicitation provision, means the number required by the IRS to be used by the offeror in reporting income tax and other returns.

(b) All offerors are required to submit the information required in paragraphs (c) through (e) of this solicitation provision in order to comply with reporting requirements of 26 U.S.C. 6041, 6041A, and 6050M and

implementing regulations issued by the Internal Revenue Service (IRS). If the resulting contract is subject to the reporting requirements described in FAR 4.903, the failure or refusal by the offeror to furnish the information may result in a 31 percent reduction of payments otherwise due under the contract.

(c) Taxpayer Identification Number (TIN).

/_/ TIN: _____.

/_/ TIN has been applied for.

/_/ TIN is not required because:

/_/ Offeror is a nonresident alien, foreign corporation, or foreign partnership that does not have income effectively connected with the conduct of a trade or business in the U.S. and does not have an office or place of business or a fiscal paying agent in the U.S.;

/_/ Offeror is an agency or instrumentality of a foreign government;

/_/ Offeror is an agency or instrumentality of a Federal, state, or local government;

/_/ Other. State basis. _____

(d) Corporate Status.

/_/ Corporation providing medical and health care services, or engaged in the billing and collecting of payments for such services;

/_/ Other corporate entity;

/_/ Not a corporate entity;

/_/ Sole proprietorship

/_/ Partnership

/_/ Hospital or extended care facility described in 26 CFR 501(c)(3) that is exempt from taxation under 26 CFR 501(a).

(e) Common Parent.

/_/ Offeror is not owned or controlled by a common parent as defined in paragraph (a) of this provision.

/_/ Name and TIN of common parent:

Name _____

TIN _____

(End of provision)

4 52.209-5 CERTIFICATION REGARDING DEBARMENT, SUSPENSION, PROPOSED DEBARMENT, AND OTHER RESPONSIBILITY MATTERS (MAR 1996)

(a)(1) The Offeror certifies, to the best of its knowledge and belief, that--

(i) The Offeror and/or any of its Principals--

(A) Are / / are not / / presently debarred, suspended, proposed for debarment, or declared ineligible for the award of contracts by any Federal agency;

(B) Have / / have not / /, within a three-year period preceding this offer, been convicted of or had a civil judgment rendered against them for: commission of fraud or a criminal offense in connection with obtaining, attempting to obtain, or performing a public (Federal, state, or local) contract or subcontract; violation of Federal or state antitrust statutes relating to the submission of offers; or commission of embezzlement, theft, forgery, bribery, falsification or destruction of records, making false statements, tax evasion, or receiving stolen property; and

(C) Are / / are not / / presently indicted for, or otherwise criminally or civilly charged by a governmental entity with, commission of any of the offenses enumerated in subdivision (a)(1)(i)(B) of this provision.

(ii) The Offeror has / / has not / /, within a three-year period preceding this offer, had one or more contracts terminated for default by any Federal agency.

(2) "Principals," for the purposes of this certification, means officers; directors; owners; partners; and, persons having primary management or supervisory responsibilities within a business entity (e.g., general manager; plant manager; head of a subsidiary, division, or business segment, and similar positions).

THIS CERTIFICATION CONCERNS A MATTER WITHIN THE JURISDICTION OF AN AGENCY OF THE UNITED STATES AND THE MAKING OF A FALSE, FICTITIOUS, OR FRAUDULENT CERTIFICATION MAY RENDER THE MAKER SUBJECT TO PROSECUTION UNDER SECTION 1001, TITLE 18, UNITED STATES CODE.

(b) The Offeror shall provide immediate written notice to the Contracting Officer if, at any time prior to contract award, the Offeror learns that its certification was erroneous when submitted or has become erroneous by reason of changed circumstances.

(c) A certification that any of the items in paragraph (a) of this provision exists will not necessarily result in withholding of an award under this solicitation. However, the certification will be considered in connection with a determination of the Offeror's responsibility. Failure of the Offeror to furnish a certification or provide such additional information as requested by the Contracting Officer may render the Offeror nonresponsible.

(d) Nothing contained in the foregoing shall be construed to require establishment of a system of records in order to render, in good faith, the certification required by paragraph (a) of this provision. The knowledge and information of an Offeror is not required to exceed that which is normally possessed by a prudent person in the ordinary course of business dealings.

(e) The certification in paragraph (a) of this provision is a material representation of fact upon which reliance was placed when making award. If it is later determined that the Offeror knowingly rendered an erroneous certification, in addition to other remedies available to the Government, the Contracting Officer may terminate the contract resulting from this solicitation for default.

(End of provision)

5 52.214-2 TYPE OF BUSINESS ORGANIZATION--SEALED BIDDING (JUL 1987)

The bidder, by checking the applicable box, represents that--

(a) It operates as /_/ a corporation incorporated under the laws of the State of _____, /_/ an individual, /_/ a partnership, /_/ a nonprofit organization, or /_/ a joint venture; or

(b) If the bidder is a foreign entity, it operates as /_/ an individual, /_/ a partnership, /_/ a nonprofit organization, /_/ a joint venture, or /_/ a corporation, registered for business in _____.
(country)

(End of provision)

(a)(1) The standard industrial classification (SIC) code for this acquisition is 1541

(2) The small business size standard is $17.0 million

(3) The small business size standard for a concern which submits an offer in its own name, other than on a construction or service contract, but which proposes to furnish a product which it did not itself manufacture, is 500 employees.

(b) Representations. (1) The offeror represents as part of its offer that it [ ] is, [ ] is not a small business concern.

(2) (Complete only if offeror represented itself as a small business concern in block (b)(1) of this section.) The offeror represents as part of its offer that it [ ] is, [ ] is not a small disadvantaged business concern.

(3) (Complete only if offeror represented itself as a small business concern in block (b)(1) of this section.) The offeror represents as part of its offer that it [ ] is, [ ] is not a women-owned small business concern.

(c) Definitions. "Joint venture," for purposes of a small disadvantaged business (SDB) set-aside or price evaluation preference (as prescribed at 13 CFR 124.321), is a concern that is owned and controlled by one or more socially and economically disadvantaged individuals entering into a joint venture agreement with one or more business concerns and is considered to be affiliated for size purposes with such other concern(s). The combined annual receipts or employees of the concerns entering into the joint venture must meet the applicable size standard corresponding to the SIC code designated for the contract. The majority of the venture's earnings must accrue directly to the socially and economically disadvantaged individuals in the SDB concern(s) in the joint venture. The percentage of the ownership involvement in a joint venture by disadvantaged individuals must be at least 51 percent.

"Small business concern," as used in this provision, means a concern, including its affiliates, that is independently owned and operated, not dominant in the field of operation in which it is bidding on Government contracts, and qualified as a small business under the criteria in 13 CFR Part 121 and the size standard in paragraph (a) of this provision.

"Small disadvantaged business concern," as used in this provision, means a small business concern that (1) is at least 51 percent unconditionally owned by one or more individuals who are both socially and economically disadvantaged, or a publicly owned business having at least 51 percent of its stock unconditionally owned by one or more socially and economically disadvantaged individuals, and (2) has its management and daily business controlled by one or more such individuals. This term also means a small business concern that is at least 51 percent unconditionally owned by an economically disadvantaged Indian tribe or Native Hawaiian Organization, or a publicly owned business having at least 51 percent of its stock unconditionally owned by one or more of these entities, which has its management and daily business controlled by members of an economically disadvantaged Indian tribe or Native Hawaiian Organization, and which meets the requirements of 13 CFR Part 124.

"Women-owned small business concern," as used in this provision, means a

small business concern--

(1) Which is at least 51 percent owned by one or more women or, in the case of any publicly owned business, at least 51 percent of the stock of which is owned by one or more women; and

(2) Whose management and daily business operations are controlled by one or more women.

(d) Notice. (1) If this solicitation is for supplies and has been set aside, in whole or in part, for small business concerns, then the clause in this solicitation providing notice of the set-aside contains restrictions on the source of the end items to be furnished.

(2) Under 15 U.S.C. 645(d), any person who misrepresents a firm's status as a small or small disadvantaged business concern in order to obtain a contract to be awarded under the preference programs established pursuant to sections 8(a), 8(d), 9, or 15 of the Small Business Act or any other provision of Federal law that specifically references section 8(d) for a definition of program eligibility, shall--

(i) Be punished by imposition of fine, imprisonment, or both;

(ii) Be subject to administrative remedies, including suspension and debarment; and

(iii) Be ineligible for participation in programs conducted under the authority of the Act.

(End of provision)

7 52.219-2 EQUAL LOW BIDS (OCT 1995)

(a) This provision applies to small business concerns only.

(b) The bidder's status as a labor surplus area (LSA) concern may affect entitlement to award in case of tie bids. If the bidder wishes to be considered for this priority, the bidder must identify, in the following space, the LSA in which the costs to be incurred on account of manufacturing or production (by the bidder or the first-tier subcontractors) amount to more than 50 percent of the contract price.

_____

_____

(c) Failure to identify the labor surplus areas as specified in paragraph (b) of this provision will preclude the bidder from receiving priority consideration. If the bidder is awarded a contract as a result of receiving priority consideration under this provision and would not have otherwise received award, the bidder shall perform the contract or cause the contract to be performed in accordance with the obligations of an LSA concern.

(End of provision)

8 52.219-19 SMALL BUSINESS CONCERN REPRESENTATION FOR THE SMALL BUSINESS COMPETITIVENESS DEMONSTRATION PROGRAM (JAN 1997)

(a) Definition.

"Emerging small business" as used in this solicitation, means a small business concern whose size is no greater than 50 percent of the numerical size standard applicable to the standard industrial classification code

assigned to a contracting opportunity.

(b) (Complete only if the Offeror has represented itself under the provision at 52.219-1 as a small business concern under the size standards of this solicitation.)

The Offeror [ ] is, [ ] is not an emerging small business.

(c) (Complete only if the Offeror is a small business or an emerging small business, indicating its size range.)

Offeror's number of employees for the past 12 months (check this column if size standard stated in solicitation is expressed in terms of number of employees) or Offeror's average annual gross revenue for the last 3 fiscal years (check this column if size standard stated in solicitation is expressed in terms of annual receipts). (Check one of the following.)

No. of Employees	Avg. Annual Gross Revenues
____50 or fewer	_____$1 million or less
____51-100	_____$1,000,001-$2 million
____101-250	_____$2,000,001-$3.5 million
____251-500	_____$3,500,001-$5 million
____501-750	_____$5,000,001-$10 million
____751-1,000	_____$10,000,001-$17 million
____Over 1,000	_____Over $17 million

(End of provision)

9 52.222-21 CERTIFICATION OF NONSEGREGATED FACILITIES (APR 1984)

(a) "Segregated facilities," as used in this provision, means any waiting rooms, work areas, rest rooms and wash rooms, restaurants and other eating areas, time clocks, locker rooms and other storage or dressing areas, parking lots, drinking fountains, recreation or entertainment areas, transportation, and housing facilities provided for employees, that are segregated by explicit directive or are in fact segregated on the basis of race, color, religion, or national origin because of habit, local custom, or otherwise.

(b) By the submission of this offer, the offeror certifies that it does not and will not maintain or provide for its employees any segregated facilities at any of its establishments, and that it does not and will not permit its employees to perform their services at any location under its control where segregated facilities are maintained. The offeror agrees that a breach of this certification is a violation of the Equal Opportunity clause in the contract.

(c) The offeror further agrees that (except where it has obtained identical certifications from proposed subcontractors for specific time periods) it will--

(1) Obtain identical certifications from proposed subcontractors before the award of subcontracts under which the subcontractor will be subject to the Equal Opportunity clause;

(2) Retain the certifications in the files; and

(3) Forward the following notice to the proposed subcontractors

(except if the proposed subcontractors have submitted identical certifications for specific time periods):

NOTICE TO PROSPECTIVE SUBCONTRACTORS OF REQUIREMENT FOR CERTIFICATIONS OF NONSEGREGATED FACILITIES.

A Certification of Nonsegregated Facilities must be submitted before the award of a subcontract under which the subcontractor will be subject to the Equal Opportunity clause. The certification may be submitted either for each subcontract or for all subcontracts during a period (i.e., quarterly, semiannually, or annually).

NOTE: The penalty for making false statements in offers is prescribed in 18 U.S.C. 1001.

(End of provision)
(R 7-2003.14(b)(1)(A) 1970 AUG)
(R 1-12.803-10(d))

10 52.223-1 CLEAN AIR AND WATER CERTIFICATION (APR 1984)

The Offeror certifies that--

(a) Any facility to be used in the performance of this proposed contract is /_/ is not /_/ listed on the Environmental Protection Agency (EPA) List of Violating Facilities;

(b) The Offeror will immediately notify the Contracting Officer, before award, of the receipt of any communication from the Administrator, or a designee, of the EPA, indicating that any facility that the Offeror proposes to use for the performance of the contract is under consideration to be listed on the EPA List of Violating Facilities; and

(c) The Offeror will include a certification substantially the same as this certification, including this paragraph (c), in every nonexempt subcontract.

(End of provision)
(AV 7-2003.71 1977 JUN)
(AV 1-1.2302-1)

11 52.223-3 HAZARDOUS MATERIAL IDENTIFICATION AND MATERIAL SAFETY DATA (JAN 1997)

(a) "Hazardous material," as used in this clause, includes any material defined as hazardous under the latest version of Federal Standard No. 313 (including revisions adopted during the term of the contract).

(b) The Offeror must list any hazardous material, as defined in paragraph (a) of this clause, to be delivered under this contract. The hazardous material shall be properly identified and include any applicable identification number, such as National Stock Number or Special Item Number. This information shall also be included on the Material Safety Data Sheet submitted under this contract.

Material	Identification No. (If none, insert None)
_____	_____
_____	_____
_____	_____

(c) This list must be updated during performance of the contract whenever the Contractor determines that any other material to be delivered under this contract is hazardous.

(d) The apparently successful Offeror agrees to submit, for each item as required prior to award, a Material Safety Data Sheet, meeting the requirements of 29 CFR 1910.1200(g) and the latest version of Federal Standard No. 313, for all hazardous material identified in paragraph (b) of this clause. Data shall be submitted in accordance with Federal Standard No. 313, whether or not the apparently successful Offeror is the actual manufacturer of these items. Failure to submit the Material Safety Data Sheet prior to award may result in the apparently successful Offeror being considered nonresponsible and ineligible for award.

(e) If, after award, there is a change in the composition of the item(s) or a revision to Federal Standard No. 313, which renders incomplete or inaccurate the data submitted under paragraph (d) of this clause, the Contractor shall promptly notify the Contracting Officer and resubmit the data.

(f) Neither the requirements of this clause nor any act or failure to act by the Government shall relieve the Contractor of any responsibility or liability for the safety of Government, Contractor, or subcontractor personnel or property.

(g) Nothing contained in this clause shall relieve the Contractor from complying with applicable Federal, State, and local laws, codes, ordinances, and regulations (including the obtaining of licenses and permits) in connection with hazardous material.

(h) The Government's rights in data furnished under this contract with respect to hazardous material are as follows:

(1) To use, duplicate and disclose any data to which this clause is applicable. The purposes of this right are to--

(i) Apprise personnel of the hazards to which they may be exposed in using, handling, packaging, transporting, or disposing of hazardous materials;

(ii) Obtain medical treatment for those affected by the material; and

(iii) Have others use, duplicate, and disclose the data for the Government for these purposes.

(2) To use, duplicate, and disclose data furnished under this clause, in accordance with subparagraph (h)(1) of this clause, in precedence over any other clause of this contract providing for rights in data.

(3) The Government is not precluded from using similar or data acquired from other sources.

(End of clause)

12 52.223-13 CERTIFICATION OF TOXIC CHEMICAL RELEASE REPORTING (OCT 1996)

(a) Submission of this certification is a prerequisite for making or entering into this contract imposed by Executive Order 12969, August 8, 1995.

(b) By signing this offer, the offeror certifies that----

(1) As the owner or operator of facilities that will be used in the performance of this contract that are subject to the filing and reporting

requirements described in section 313 of the Emergency Planning and Community Right-to-Know Act of 1986 (EPCRA) (42 U.S.C. 11023) and section 6607 of the Pollution Prevention Act of 1990 (PPA) (42 U.S.C. 13106), the offeror will file and continue to file for such facilities for the life of the contract the Toxic Chemical Release Inventory Form (Form R) as described in sections 313(a) and (g) of EPCRA and section 6607 of PPA; or

(2) None of its owned or operated facilities to be used in the performance of this contract is subject to the Form R filing and reporting requirements because each such facility is exempt for at least one of the following reasons: (Check each block that is applicable.)

/__/ (i) The facility does not manufacture, process, or otherwise use any toxic chemicals listed under section 313(c) of EPCRA, 42 U.S.C. 11023(c);

/__/ (ii) The facility does not have 10 or more full-time employees as specified in section 313(b)(1)(A) of EPCRA, 42 U.S.C. 11023(b)(1)(A);

/__/ (iii) The facility does not meet the reporting thresholds of toxic chemicals established under section 313(f) of EPCRA, 42 U.S.C. 11023(f) (including the alternate thresholds at 40 CFR 372.27, provided an appropriate certification form has been filed with EPA);

/__/ (iv) The facility does not fall within Standard Industrial Classification Code (SIC) designations 20 through 39 as set forth in Section 19.102 of the Federal Acquisition Regulation; or

/__/ (v) The facility is not located within any State of the United States, the District of Columbia, the Commonwealth of Puerto Rico, Guam, American Samoa, the United States Virgin Islands, the Northern Mariana Islands, or any other territory or possession over which the United States has jurisdiction.

(End of provision)

13 52.209-7001 DISCLOSURE OF OWNERSHIP OR CONTROL BY THE GOVERNMENT OF A TERRORIST COUNTRY (SEP 1994)

(a) Definitions.

As used in this provision--

(1) "Government of a terrorist country" includes the state and the government of a terrorist country, as well as any political subdivision, agency, or instrumentality thereof.

(2) "Terrorist country" means a country determined by the Secretary of State, under section 6(j)(1)(A) of the Export Administration Act of 1979 (50 U.S.C. App. 2405(j)(i)(A)), to be a country the government of which has repeatedly provided support for acts of international terrorism. As of the date of this provision, terrorist countries include: Cuba, Iran, Iraq, Libya, North Korea, Sudan, and Syria.

(3) "Significant interest" means--

(i) Ownership of or beneficial interest in 5 percent or more of the firm's or subsidiary's securities. Beneficial interest includes holding 5 percent or more of any class of the firm's securities in "nominee shares," "street names," or some other method of holding securities that does not disclose the beneficial owner;

(ii) Holding a management position in the firm, such as a director or officer;

(iii) Ability to control or influence the election, appointment, or tenure of directors or officers in the firm;

(iv) Ownership of 10 percent or more of the assets of a firm such as equipment, buildings, real estate, or other tangible assets of the firm; or

(v) Holding 50 percent or more of the indebtedness of a firm.

(b) Prohibition on award.

In accordance with 10 U.S.C. 2327, no contract may be awarded to a firm or a subsidiary of a firm if the government of a terrorist country has a significant interest in the firm or subsidiary, unless a waiver is granted by the Secretary of Defense.

(c) Disclosure.

If the government of a terrorist country has a significant interest in the Offeror or a subsidiary of the Offeror, the Offeror shall disclose such interest in an attachment to its offer. If the Offeror is a subsidiary, it shall also disclose any significant interest the government of a terrorist country has in any firm that owns or controls the subsidiary. The disclosure shall include--

(1) Identification of each government holding a significant interest; and

(2) A description of the significant interest held by each government.

(End of provision)

14 52.219-7000 SMALL DISADVANTAGED BUSINESS CONCERN REPRESENTATION (DoD CONTRACTS) (JUN 1997)

(a) Definition. "Small disadvantaged business concern," as used in this provision, means a small business concern, owned and controlled by individuals who are both socially and economically disadvantaged, as defined by the Small Business Administration at 13 CFR Part 124, the majority of earnings of which directly accrue to such individuals. This term also means a small business concern owned and controlled by an economically disadvantaged Indian tribe or Native Hawaiian organization which meets the requirements of 13 CFR 124.112 or 13 CFR 124.113, respectively. In general, 13 CFR Part 124 describes a small disadvantaged business concern as a small business concern--

(1) Which is at least 51 percent unconditionally owned by one or more socially and economically disadvantaged individuals; or

(2) In the case of any publicly owned business, at least 51 percent of the voting stock is unconditionally owned by one or more socially and economically disadvantaged individuals; and

(3) Whose management and daily business operations are controlled by one or more such individuals.

(b) Representations. Check the category in which your ownership falls--

_____ Subcontinent Asian (Asian-Indian) American (U.S. citizen with origins from India, Pakistan, Bangladesh, Sri Lanka, Bhutan, the Maldives Islands, or Nepal)

_____ Asian-Pacific American (U.S. citizen with origins from Japan, China, the Philippines, Vietnam, Korea, Samoa, Guam, U.S. Trust Territory of the

Pacific Islands (Republic of Palau), the Northern Mariana Islands, Laos, Kampuchea (Cambodia), Taiwan, Burma, Thailand, Malaysia, Indonesia, Singapore, Brunei, Republic of the Marshall Islands, the Federated States of Micronesia, Macao, Hong Kong, Fiji, Tonga, Kiribati, Tuvalu, or Nauru)

_____ Black American (U.S. citizen)

_____ Hispanic American (U.S. citizen with origins from South America, Central America, Mexico, Cuba, the Dominican Republic, Puerto Rico, Spain, or Portugal)

_____ Native American (American Indians, Eskimos, Aleuts, or Native Hawaiians, including Indian tribes or Native Hawaiian organizations)

_____ Individual/concern, other than one of the preceding, currently certified for participation in the Minority Small Business and Capital Ownership Development Program under Section 8(a) of the Small Business Act

_____ Other

(c) Complete the following--

(1) The offeror is_____ is not _____a small disadvantaged business concern.

(2) The Small Business Administration (SBA) has _____ has not _____ made a determination concerning the offeror's status as a small disadvantaged business concern. If the SBA has made a determination, the date of the determination was _____ and the offeror--

_____ Was found by SBA to be socially and economically disadvantaged and no circumstances have changed to vary that determination.

_____ Was found by SBA not to be socially and economically disadvantaged but circumstances which caused the determination have changed.

(d) Penalties and Remedies. Anyone who misrepresents the status of a concern as a small disadvantaged business for the purpose of securing a contract or subcontract shall--

(1) Be punished by imposition of a fine, imprisonment, or both;

(2) Be subject to administrative remedies, including suspension and debarment; and

(3) Be ineligible for participation in programs conducted under authority of the Small Business Act.

(End of provision)

15 52.225-7031 SECONDARY ARAB BOYCOTT OF ISRAEL (JUN 1992)

(a) Definitions.

As used in this clause--

(1) "Foreign person" means any person other than a United States person as defined in section 16(2) of the Export Administration Act of 1979 (50 U.S.C. App. Sec 2415).

(2) "United States person" is defined in section 16(2) of the Export Administration Act of 1979 and means any United States resident or national (other than an individual resident outside the United States and employed by other than a United States person), any domestic concern (including any permanent domestic establishment of any foreign concern), and any foreign subsidiary or affiliate (including any permanent foreign establishment) of any domestic concern which is controlled in fact by such domestic concern, as determined under regulations of the President.

(b) Certification.

By submitting this offer, the Offeror, if a foreign person, company or entity, certifies that it--

(1) Does not comply with the Secondary Arab Boycott of Israel; and

(2) Is not taking or knowingly agreeing to take any action, with respect to the Secondary Boycott of Israel by Arab countries, which 50 U.S.C. App. Sec 2407(a) prohibits a United States person from taking.

(End of clause)

16 52.247-7022 REPRESENTATION OF EXTENT OF TRANSPORTATION BY SEA (AUG 1992)

(a) The Offeror shall indicate by checking the appropriate blank in paragraph (b) of this provision whether transportation of supplies by sea is anticipated under the resultant contract. The term "supplies" is defined in the Transportation of Supplies by Sea clause of this solicitation.

(b) Representation. The Offeror represents that it--

_____ Does anticipate that supplies will be transported by sea in the performance of any contract or subcontract resulting from this solicitation.

_____ Does not anticipate that supplies will be transported by sea in the performance of any contract or subcontract resulting from this solicitation.

(c) Any contract resulting from this solicitation will include the Transportation of Supplies by Sea clause. If the Offeror represents that it will not use ocean transportation, the resulting contract will also include the Defense FAR Supplement clause at 252.247-7024, Notification of Transportation of Supplies by Sea.

(End of provision)

END OF SECTION 00600

TABLE OF CONTENTS
SECTION 00700
CONTRACT CLAUSES

1	52.252-2	CLAUSES INCORPORATED BY REFERENCE (FEB 1998)
2	52.203-9	reserved
3	52.202-1	DEFINITIONS (OCT 1995)
4	52.203-3	GRATUITIES (APR 1984)
5	52.203-5	COVENANT AGAINST CONTINGENT FEES (APR 1984)
6	52.203-6	RESTRICTIONS ON SUBCONTRACTOR SALES TO THE GOVERNMENT (JUL 1995)
7	52.203-7	ANTI-KICKBACK PROCEDURES (JUL 1995)
8	52.203-8	CANCELLATION, RESCISSION, AND RECOVERY OF FUNDS FOR ILLEGAL OR IMPROPER ACTIVITY (JAN 1997)
9	52.203-10	PRICE OR FEE ADJUSTMENT FOR ILLEGAL OR IMPROPER ACTIVITY (JAN 1997)
10	52.203-12	LIMITATION ON PAYMENTS TO INFLUENCE CERTAIN FEDERAL TRANSACTIONS (JUN 1997)
11	52.204-4	PRINTING/COPYING DOUBLE-SIDED ON RECYCLED PAPER (JUN 1996)
12	52.209-6	PROTECTING THE GOVERNMENT'S INTEREST WHEN SUBCONTRACTING WITH CONTRACTOR DEBARRED, SUSPENDED, OR PROPOSED FOR DEBARMENT (JUL 1995)
13	52.211-2	AVAILABILITY OF SPECIFICATIONS LISTED IN THE DOD INDEX OF SPECIFICATIONS AND STANDARDS (DODISS) (JUN 1997)
14	52.211-15	DEFENSE PRIORITY AND ALLOCATION REQUIREMENTS (SEP 1990)
15	52.214-26	AUDIT AND RECORDS--SEALED BIDDING (OCT 1997)
16	52.214-27	PRICE REDUCTION FOR DEFECTIVE COST OR PRICING DATA--MODIFICATIONS--SEALED BIDDING (OCT 1997)
17	52.214-28	SUBCONTRACTOR COST OR PRICING DATA--MODIFICATIONS--SEALED BIDDING (OCT 1997)
18	52.214-29	ORDER OF PRECEDENCE--SEALED BIDDING (JAN 1986)
19	52.219-8	UTILIZATION OF SMALL, SMALL DISADVANTAGED AND WOMEN-OWNED SMALL BUSINESS CONCERNS (JUN 1997)
20	52.219-9 I	SMALL, SMALL DISADVANTAGED AND WOMEN-OWNED SMALL BUSINESS SUBCONTRACTING PLAN (AUG 1996)--ALTERNATE I (OCT 1995)
21	52.219-16	LIQUIDATED DAMAGES--SUBCONTRACTING PLAN (OCT 1995)
22	52.222-3	CONVICT LABOR (AUG 1996)
23	52.222-4	CONTRACT WORK HOURS AND SAFETY STANDARDS ACT--OVERTIME COMPENSATION (JUL 1995)
24	52.222-6	DAVIS-BACON ACT (FEB 1995)
25	52.222-7	WITHHOLDING OF FUNDS (FEB 1988)
26	52.222-8	PAYROLLS AND BASIC RECORDS (FEB 1988)
27	52.222-9	APPRENTICES AND TRAINEES (FEB 1988)
28	52.222-10	COMPLIANCE WITH COPELAND ACT REQUIREMENTS (FEB 1988)
29	52.222-11	SUBCONTRACTS (LABOR STANDARDS) (FEB 1988)
30	52.222-12	CONTRACT TERMINATION--DEBARMENT (FEB 1988)
31	52.222-13	COMPLIANCE WITH DAVIS-BACON AND RELATED ACT REGULATIONS (FEB 1988)
32	52.222-14	DISPUTES CONCERNING LABOR STANDARDS (FEB 1988)
33	52.222-15	CERTIFICATION OF ELIGIBILITY (FEB 1988)
34	52.222-26	EQUAL OPPORTUNITY (APR 1984)
35	52.222-27	AFFIRMATIVE ACTION COMPLIANCE REQUIREMENTS FOR CONSTRUCTION (APR 1984)
36	52.222-35	AFFIRMATIVE ACTION FOR SPECIAL DISABLED AND VIETNAM ERA VETERANS (APR 1984)
37	52.222-36	AFFIRMATIVE ACTION FOR HANDICAPPED WORKERS (APR 1984)
38	52.222-37	EMPLOYMENT REPORTS ON SPECIAL DISABLED VETERANS AND VETERANS OF THE VIETNAM ERA (JAN 1988)
39	52.223-2	CLEAN AIR AND WATER (APR 1984)
40	52.223-5	POLLUTION PREVENTION AND RIGHT-TO-KNOW INFORMATION (MAR 1997)
41	52.223-6	DRUG-FREE WORKPLACE (JAN 1997)
42	52.223-14	TOXIC CHEMICAL RELEASE REPORTING (OCT 1996)
43	52.225-5	BUY AMERICAN ACT--CONSTRUCTION MATERIALS (JUN 1997)
44	52.225-11	RESTRICTIONS ON CERTAIN FOREIGN PURCHASES (OCT 1996)
45	52.226-1	UTILIZATION OF INDIAN ORGANIZATIONS AND INDIAN-OWNED ECONOMIC ENTERPRISE (SEP 1996)
46	52.227-1	AUTHORIZATION AND CONSENT (JUL 1995)
47	52.227-2	NOTICE AND ASSISTANCE REGARDING PATENT AND COPYRIGHT INFRINGEMENT (AUG 1996)
48	52.227-4	PATENT INDEMNITY--CONSTRUCTION CONTRACTS (APR 1984)

49	52.228-2	ADDITIONAL BOND SECURITY (OCT 1997)
50	52.228-5	INSURANCE--WORK ON A GOVERNMENT INSTALLATION (JAN 1997)
51	52.228-11	PLEDGES OF ASSETS (FEB 1992)
52	52.228-12	PROSPECTIVE SUBCONTRACTOR REQUESTS FOR BONDS (OCT 1995)
53	52.229-3	FEDERAL, STATE, AND LOCAL TAXES (JAN 1991)
54	52.232-5	PAYMENTS UNDER FIXED-PRICE CONSTRUCTION CONTRACTS (MAY 1997)
55	52.232-17	INTEREST (JUN 1996)
56	52.232-23	ASSIGNMENT OF CLAIMS (JAN 1986)
57	52.232-27	PROMPT PAYMENT FOR CONSTRUCTION CONTRACTS (JUN 1997)
58	52.232-34	OPTIONAL INFORMATION FOR ELECTRONIC FUNDS TRANSFER PAYMENT (AUG 1996)
59	52.233-1	DISPUTES (OCT 1995)
60	52.233-3	PROTEST AFTER AWARD (AUG 1996)
61	52.236-2	DIFFERING SITE CONDITIONS (APR 1984)
62	52.236-3	SITE INVESTIGATION AND CONDITIONS AFFECTING THE WORK (APR 1984)
63	52.236-5	MATERIAL AND WORKMANSHIP (APR 1984)
64	52.236-6	SUPERINTENDENCE BY THE CONTRACTOR (APR 1984)
65	52.236-7	PERMITS AND RESPONSIBILITIES (NOV 1991)
66	52.236-8	OTHER CONTRACTS (APR 1984)
67	52.236-9	PROTECTION OF EXISTING VEGETATION, STRUCTURES, EQUIPMENT, UTILITIES, AND IMPROVEMENTS (APR 1984)
68	52.236-10	OPERATIONS AND STORAGE AREAS (APR 1984)
69	52.236-11	USE AND POSSESSION PRIOR TO COMPLETION (APR 1984)
70	52.236-12	CLEANING UP (APR 1984)
71	52.236-13 I	ACCIDENT PREVENTION (NOV 1991)--ALTERNATE I (NOV 1991)
72	52.236-15	SCHEDULES FOR CONSTRUCTION CONTRACTS (APR 1984)
73	52.236-21	SPECIFICATIONS AND DRAWINGS FOR CONSTRUCTION (FEB 1997)
74	52.236-26	PRECONSTRUCTION CONFERENCE (FEB 1995)
75	52.242-13	BANKRUPTCY (JUL 1995)
76	52.242-14	SUSPENSION OF WORK (APR 1984)
77	52.243-4	CHANGES (AUG 1987)
78	52.244-1	SUBCONTRACTS (FIXED-PRICE CONTRACTS) (OCT 1997)
79	52.245-1	PROPERTY RECORDS (APR 1984)
80	52.246-12	INSPECTION OF CONSTRUCTION (AUG 1996)
81	52.248-3 I	VALUE ENGINEERING--CONSTRUCTION (MAR 1989)--ALTERNATE I (APR 1984)
82	52.249-2 I	TERMINATION FOR CONVENIENCE OF THE GOVERNMENT (FIXED-PRICE) (SEP 1996)--ALTERNATE I (SEP 1996)
83	52.249-10	DEFAULT (FIXED-PRICE CONSTRUCTION) (APR 1984)
84	52.201-7000	CONTRACTING OFFICER'S REPRESENTATIVE (DEC 1991)
85	52.203-7001	SPECIAL PROHIBITION ON EMPLOYMENT (JUN 1997)
86	52.204-7003	CONTROL OF GOVERNMENT PERSONNEL WORK PRODUCT (APR 1992)
87	52.219-7003	SMALL, SMALL DISADVANTAGED AND WOMEN-OWNED SMALL BUSINESS SUBCONTRACTING PLAN (DoD CONTRACTS) (APR 1996)
88	52.223-7004	DRUG-FREE WORK FORCE (SEP 1988)
89	52.225-7012	PREFERENCE FOR CERTAIN DOMESTIC COMMODITIES (SEP 1997)
90	52.225-7026	REPORTING OF CONTRACT PERFORMANCE OUTSIDE THE UNITED STATES (NOV 1995)
91	52.227-7033	RIGHTS IN SHOP DRAWINGS (APR 1966)
92	52.231-7000	SUPPLEMENTAL COST PRINCIPLES (DEC 1991)
93	52.232-7006	REDUCTION OR SUSPENSION OF CONTRACT PAYMENTS UPON FINDING OF FRAUD (AUG 1992)
94	52.236-7000	MODIFICATION PROPOSALS--PRICE BREAKDOWN (DEC 1991)
95	52.236-7008	CONTRACT PRICES--BIDDING SCHEDULES (DEC 1991)
96	52.242-7000	POSTAWARD CONFERENCE (DEC 1991)
97	52.243-7001	PRICING OF CONTRACT MODIFICATIONS (DEC 1991)
98	52.247-7023	TRANSPORTATION OF SUPPLIES BY SEA (NOV 1995)
99	52.247-7024	NOTIFICATION OF TRANSPORTATION OF SUPPLIES BY SEA (NOV 1995)
100	52.0-4513	EQUIPMENT OWNERSHIP AND OPERATING EXPENSE SCHEDULE (EFARS 52.231-5000) (MAR 1995)

SECTION 00700

CONTRACT CLAUSES

1 52.252-2 CLAUSES INCORPORATED BY REFERENCE (FEB 1998)

This contract incorporates one or more clauses by reference, with the same force and effect as if they were given in full text. Upon request, the Contracting Officer will make their full text available. Also, the full text of a clause may be accessed electronically at this/these address(es):

http://www.arnet.gov/far
http://www.farsite.hill/af.mil
http://www.dtic.mil/dfars

2 52.203-9 reserved

(Reference)

3 52.202-1 DEFINITIONS (OCT 1995)

(a) "Head of the agency" (also called "agency head") or "Secretary" means the Secretary (or Attorney General, Administrator, Governor, Chairperson, or other chief official, as appropriate) of the agency, including any deputy or assistant chief official of the agency; and the term "authorized representative" means any person, persons, or board (other than the Contracting Officer) authorized to act for the head of the agency or Secretary.

(b) Commercial component means any component that is a commercial item.

(c) Commercial item means--

(1) Any item, other than real property, that is of a type customarily used for nongovernmental purposes and that--

(i) Has been sold, leased, or licensed to the general public; or

(ii) Has been offered for sale, lease, or license to the general public;

(2) Any item that evolved from an item described in paragraph (c)(1) of this clause through advances in technology or performance and that is not yet available in the commercial marketplace, but will be available in the commercial marketplace in time to satisfy the delivery requirements under a Government solicitation;

(3) Any item that would satisfy a criterion expressed in paragraphs (c)(1) or (c)(2) of this clause, but for--

(i) Modifications of a type customarily available in the commercial marketplace; or

(ii) Minor modifications of a type not customarily available in the commercial marketplace made to meet Federal Government requirements. "Minor" modifications means modifications that do not significantly alter the nongovernmental function or essential physical characteristics of an item or component, or change the purpose of a process. Factors to be considered in determining whether a modification is minor include the value and size of the modification and the comparative value and size of the final product. Dollar values

and percentages may be used as guideposts, but are not conclusive evidence that a modification is minor;

(4) Any combination of items meeting the requirements of paragraphs (c)(1), (2), (3), or (5) of this clause that are of a type customarily combined and sold in combination to the general public;

(5) Installation services, maintenance services, repair services, training services, and other services if such services are procured for support of an item referred to in paragraphs (c)(1), (2), (3), or (4) of this clause, and if the source of such services--

(i) Offers such services to the general public and the Federal Government contemporaneously and under similar terms and conditions; and

(ii) Offers to use the same work force for providing the Federal Government with such services as the source uses for providing such services to the general public;

(6) Services of a type offered and sold competitively in substantial quantities in the commercial marketplace based on established catalog or market prices for specific tasks performed under standard commercial terms and conditions. This does not include services that are sold based on hourly rates without an established catalog or market price for a specific service performed;

(7) Any item, combination of items, or service referred to in subparagraphs (c)(1) through (c)(6), notwithstanding the fact that the item, combination of items, or service is transferred between or among separate divisions, subsidiaries, or affiliates of a Contractor; or

(8) A nondevelopmental item, if the procuring agency determines the item was developed exclusively at private expense and sold in substantial quantities, on a competitive basis, to multiple State and local Governments.

(d) Component means any item supplied to the Federal Government as part of an end item or of another component.

(e) Nondevelopmental item means--

(1) Any previously developed item of supply used exclusively for governmental purposes by a Federal agency, a State or local government, or a foreign government with which the United States has a mutual defense cooperation agreement;

(2) Any item described in paragraph (e)(1) of this definition that requires only minor modification or modifications of a type customarily available in the commercial marketplace in order to meet the requirements of the procuring department or agency; or

(3) Any item of supply being produced that does not meet the requirements of paragraph (e)(1) or (e)(2) solely because the item is not yet in use.

(f) "Contracting Officer" means a person with the authority to enter into, administer, and/or terminate contracts and make related determinations and findings. The term includes certain authorized representatives of the Contracting Officer acting within the limits of their authority as delegated by the Contracting Officer.

(g) Except as otherwise provided in this contract, the term "subcontracts" includes, but is not limited to, purchase orders and changes and modifications to purchase orders under this contract.

(End of clause)

4 52.203-3 GRATUITIES (APR 1984)

(a) The right of the Contractor to proceed may be terminated by written notice if, after notice and hearing, the agency head or a designee determines that the Contractor, its agent, or another representative--

(1) Offered or gave a gratuity (e.g., an entertainment or gift) to an officer, official, or employee of the Government; and

(2) Intended, by the gratuity, to obtain a contract or favorable treatment under a contract.

(b) The facts supporting this determination may be reviewed by any court having lawful jurisdiction.

(c) If this contract is terminated under paragraph (a) above, the Government is entitled--

(1) To pursue the same remedies as in a breach of the contract; and

(2) In addition to any other damages provided by law, to exemplary damages of not less than 3 nor more than 10 times the cost incurred by the Contractor in giving gratuities to the person concerned, as determined by the agency head or a designee. (This subparagraph (c)(2) is applicable only if this contract uses money appropriated to the Department of Defense.)

(d) The rights and remedies of the Government provided in this clause shall not be exclusive and are in addition to any other rights and remedies provided by law or under this contract.

(End of clause)

(R 7-104.16 1952 MAR)

5 52.203-5 COVENANT AGAINST CONTINGENT FEES (APR 1984)

(a) The Contractor warrants that no person or agency has been employed or retained to solicit or obtain this contract upon an agreement or understanding for a contingent fee, except a bona fide employee or agency. For breach or violation of this warranty, the Government shall have the right to annul this contract without liability or, in its discretion, to deduct from the contract price or consideration, or otherwise recover, the full amount of the contingent fee.

(b) "Bona fide agency," as used in this clause, means an established commercial or selling agency, maintained by a contractor for the purpose of securing business, that neither exerts nor proposes to exert improper influence to solicit or obtain Government contracts nor holds itself out as being able to obtain any Government contract or contracts through improper influence.

"Bona fide employee," as used in this clause, means a person, employed by a Contractor and subject to the Contractor's supervision and control as to time, place, and manner of performance, who neither exerts nor proposes to exert improper influence to solicit or obtain Government contracts nor holds out as being able to obtain any Government contract or contracts through improper influence.

"Contingent fee," as used in this clause, means any commission, percentage, brokerage, or other fee that is contingent upon the success that a person or concern has in securing a Government contract.

"Improper influence," as used in this clause, means any influence that

induces or tends to induce a Government employee or officer to give consideration or to act regarding a Government contract on any basis other than the merits of the matter.

(End of clause)
(R 7-103.20 1958 JAN)
(R 1-1.503)
(R 1-7.102-18)

6 52.203-6 RESTRICTIONS ON SUBCONTRACTOR SALES TO THE GOVERNMENT (JUL 1995)

(a) Except as provided in (b) below, the Contractor shall not enter into any agreement with an actual or prospective subcontractor, nor otherwise act in any manner, which has or may have the effect of restricting sales by such subcontractors directly to the Government of any item or process (including computer software) made or furnished by the subcontractor under this contract or under any follow-on production contract.

(b) The prohibition in (a) above does not preclude the Contractor from asserting rights that are otherwise authorized by law or regulation.

(c) The Contractor agrees to incorporate the substance of this clause, including this paragraph (c), in all subcontracts under this contract which exceed $100,000.

(End of clause)

7 52.203-7 ANTI-KICKBACK PROCEDURES (JUL 1995)

(a) Definitions.

"Kickback," as used in this clause, means any money, fee, commission, credit, gift, gratuity, thing of value, or compensation of any kind which is provided, directly or indirectly, to any prime Contractor, prime Contractor employee, subcontractor, or subcontractor employee for the purpose of improperly obtaining or rewarding favorable treatment in connection with a prime contract or in connection with a subcontract relating to a prime contract.

"Person," as used in this clause, means a corporation, partnership, business association of any kind, trust, joint-stock company, or individual.

"Prime contract," as used in this clause, means a contract or contractual action entered into by the United States for the purpose of obtaining supplies, materials, equipment, or services of any kind.

"Prime Contractor" as used in this clause, means a person who has entered into a prime contract with the United States.

"Prime Contractor employee," as used in this clause, means any officer, partner, employee, or agent of a prime Contractor.

"Subcontract," as used in this clause, means a contract or contractual action entered into by a prime Contractor or subcontractor for the purpose of obtaining supplies, materials, equipment, or services of any kind under a prime contract.

"Subcontractor," as used in this clause, (1) means any person, other than the prime Contractor, who offers to furnish or furnishes any

supplies, materials, equipment, or services of any kind under a prime contract or a subcontract entered into in connection with such prime contract, and (2) includes any person who offers to furnish or furnishes general supplies to the prime Contractor or a higher tier subcontractor.

"Subcontractor employee," as used in this clause, means any officer, partner, employee, or agent of a subcontractor.

(b) The Anti-Kickback Act of 1986 (41 U.S.C. 51-58) (the Act), prohibits any person from--

(1) Providing or attempting to provide or offering to provide any kickback;

(2) Soliciting, accepting, or attempting to accept any kickback; or

(3) Including, directly or indirectly, the amount of any kickback in the contract price charged by a prime Contractor to the United States or in the contract price charged by a subcontractor to a prime Contractor or higher tier subcontractor.

(c)(1) The Contractor shall have in place and follow reasonable procedures designed to prevent and detect possible violations described in paragraph (b) of this clause in its own operations and direct business relationships.

(2) When the Contractor has reasonable grounds to believe that a violation described in paragraph (b) of this clause may have occurred, the Contractor shall promptly report in writing the possible violation. Such reports shall be made to the inspector general of the contracting agency, the head of the contracting agency if the agency does not have an inspector general, or the Department of Justice.

(3) The Contractor shall cooperate fully with any Federal agency investigating a possible violation described in paragraph (b) of this clause.

(4) The Contracting Officer may (i) offset the amount of the kickback against any monies owed by the United States under the prime contract and/or (ii) direct that the Prime Contractor withhold from sums owed a subcontractor under the prime contract the amount of the kickback. The Contracting Officer may order that monies withheld under subdivision (c)(4)(ii) of this clause be paid over to the Government unless the Government has already offset those monies under subdivision (c)(4)(i) of this clause. In either case, the Prime Contractor shall notify the Contracting Officer when the monies are withheld.

(5) The Contractor agrees to incorporate the substance of this clause, including subparagraph (c)(5) but excepting subparagraph (c)(1), in all subcontracts under this contract which exceed $100,000.

(End of clause)

8 52.203-8 CANCELLATION, RESCISSION, AND RECOVERY OF FUNDS FOR ILLEGAL OR IMPROPER ACTIVITY (JAN 1997)

(a) If the Government receives information that a contractor or a person has engaged in conduct constituting a violation of subsection (a), (b), (c), or (d) of Section 27 of the Office of Federal Procurement Policy Act (41 U.S.C. 423) (the Act), as amended by section 4304 of the National Defense Authorization Act for Fiscal Year 1996 (Pub. L. 104-106), the Government may--

(1) Cancel the solicitation, if the contract has not yet been awarded or issued; or

(2) Rescind the contract with respect to which--

(i) The Contractor or someone acting for the Contractor has been convicted for an offense where the conduct constitutes a violation of subsection 27 (a) or (b) of the Act for the purpose of either--

(A) Exchanging the information covered by such subsections for anything of value; or

(B) Obtaining or giving anyone a competitive advantage in the award of a Federal agency procurement contract; or

(ii) The head of the contracting activity has determined, based upon a preponderance of the evidence, that the Contractor or someone acting for the Contractor has engaged in conduct constituting an offense punishable under subsection 27(e)(1) of the Act.

(b) If the Government rescinds the contract under paragraph (a) of this clause, the Government is entitled to recover, in addition to any penalty prescribed by law, the amount expended under the contract.

(c) The rights and remedies of the Government specified herein are not exclusive, and are in addition to any other rights and remedies provided by law, regulation, or under this contract.

(End of clause)

9 52.203-10 PRICE OR FEE ADJUSTMENT FOR ILLEGAL OR IMPROPER ACTIVITY (JAN 1997)

(a) The Government, at its election, may reduce the price of a fixed-price type contract and the total cost and fee under a cost-type contract by the amount of profit or fee determined as set forth in paragraph (b) of this clause if the head of the contracting activity or designee determines that there was a violation of subsection 27 (a), (b), or (c) of the Office of Federal Procurement Policy Act, as amended (41 U.S.C. 423), as implemented in section 3.104 of the Federal Acquisition Regulation.

(b) The price or fee reduction referred to in paragraph (a) of this clause shall be--

(1) For cost-plus-fixed-fee contracts, the amount of the fee specified in the contract at the time of award;

(2) For cost-plus-incentive-fee contracts, the target fee specified in the contract at the time of award, notwithstanding any minimum fee or "fee floor" specified in the contract;

(3) For cost-plus-award-fee contracts--

(i) The base fee established in the contract at the time of contract award;

(ii) If no base fee is specified in the contract, 30 percent of the amount of each award fee otherwise payable to the Contractor for each award fee evaluation period or at each award fee determination point.

(4) For fixed-price-incentive contracts, the Government may--

(i) Reduce the contract target price and contract target profit both by an amount equal to the initial target profit specified in the contract at the time of contract award; or

(ii) If an immediate adjustment to the contract target price and

contract target profit would have a significant adverse impact on the incentive price revision relationship under the contract, or adversely affect the contract financing provisions, the Contracting Officer may defer such adjustment until establishment of the total final price of the contract. The total final price established in accordance with the incentive price revision provisions of the contract shall be reduced by an amount equal to the initial target profit specified in the contract at the time of contract award and such reduced price shall be the total final contract price.

(5) For firm-fixed-price contracts, by 10 percent of the initial contract price or a profit amount determined by the Contracting Officer from records or documents in existence prior to the date of the contract award.

(c) The Government may, at its election, reduce a prime contractor's price or fee in accordance with the procedures of paragraph (b) of this clause for violations of the Act by its subcontractors by an amount not to exceed the amount of profit or fee reflected in the subcontract at the time the subcontract was first definitively priced.

(d) In addition to the remedies in paragraphs (a) and (c) of this clause, the Government may terminate this contract for default. The rights and remedies of the Government specified herein are not exclusive, and are in addition to any other rights and remedies provided by law or under this contract.

(End of clause)

10 52.203-12 LIMITATION ON PAYMENTS TO INFLUENCE CERTAIN FEDERAL TRANSACTIONS (JUN 1997)

(a) Definitions.

"Agency," as used in this clause, means executive agency as defined in 2.101.

"Covered Federal action," as used in this clause, means any of the following Federal actions:

(1) The awarding of any Federal contract.

(2) The making of any Federal grant.

(3) The making of any Federal loan.

(4) The entering into of any cooperative agreement.

(5) The extension, continuation, renewal, amendment, or modification of any Federal contract, grant, loan, or cooperative agreement.

"Indian tribe" and "tribal organization," as used in this clause, have the meaning provided in section 4 of the Indian Self-Determination and Education Assistance Act (25 U.S.C. 450B) and include Alaskan Natives.

"Influencing or attempting to influence," as used in this clause, means making, with the intent to influence, any communication to or appearance before an officer or employee of any agency, a Member of Congress, an officer or employee of Congress, or an employee of a Member of Congress in connection with any covered Federal action.

"Local government," as used in this clause, means a unit of government in a State and, if chartered, established, or otherwise recognized by a State for the performance of a governmental duty, including a local public authority, a special district, an intrastate district, a council of

governments, a sponsor group representative organization, and any other instrumentality of a local government.

"Officer or employee of an agency," as used in this clause, includes the following individuals who are employed by an agency:

(1) An individual who is appointed to a position in the Government under title 5, United States Code, including a position under a temporary appointment.

(2) A member of the uniformed services, as defined in subsection 101(3), title 37, United States Code.

(3) A special Government employee, as defined in section 202, title 18, United States Code.

(4) An individual who is a member of a Federal advisory committee, as defined by the Federal Advisory Committee Act, title 5, United States Code, appendix 2.

"Person," as used in this clause, means an individual, corporation, company, association, authority, firm, partnership, society, State, and local government, regardless of whether such entity is operated for profit, or not for profit. This term excludes an Indian tribe, tribal organization, or any other Indian organization with respect to expenditures specifically permitted by other Federal law.

"Reasonable compensation," as used in this clause, means, with respect to a regularly employed officer or employee of any person, compensation that is consistent with the normal compensation for such officer or employee for work that is not furnished to, not funded by, or not furnished in cooperation with the Federal Government.

"Reasonable payment," as used in this clause, means, with respect to professional and other technical services, a payment in an amount that is consistent with the amount normally paid for such services in the private sector.

"Recipient," as used in this clause, includes the Contractor and all subcontractors. This term excludes an Indian tribe, tribal organization, or any other Indian organization with respect to expenditures specifically permitted by other Federal law.

"Regularly employed," as used in this clause, means, with respect to an officer or employee of a person requesting or receiving a Federal contract, an officer or employee who is employed by such person for at least 130 working days within 1 year immediately preceding the date of the submission that initiates agency consideration of such person for receipt of such contract. An officer or employee who is employed by such person for less than 130 working days within 1 year immediately preceding the date of the submission that initiates agency consideration of such person shall be considered to be regularly employed as soon as he or she is employed by such person for 130 working days.

"State," as used in this clause, means a State of the United States, the District of Columbia, the Commonwealth of Puerto Rico, a territory or possession of the United States, an agency or instrumentality of a State, and multi-State, regional, or interstate entity having governmental duties and powers.

(b) Prohibitions.

(1) Section 1352 of title 31, United States Code, among other things, prohibits a recipient of a Federal contract, grant, loan, or cooperative agreement from using appropriated funds to pay any person for influencing

or attempting to influence an officer or employee of any agency, a Member of Congress, an officer or employee of Congress, or an employee of a Member of Congress in connection with any of the following covered Federal actions: the awarding of any Federal contract; the making of any Federal grant; the making of any Federal loan; the entering into of any cooperative agreement; or the modification of any Federal contract, grant, loan, or cooperative agreement.

(2) The Act also requires Contractors to furnish a disclosure if any funds other than Federal appropriated funds (including profit or fee received under a covered Federal transaction) have been paid, or will be paid, to any person for influencing or attempting to influence an officer or employee of any agency, a Member of Congress, an officer or employee of Congress, or an employee of a Member of Congress in connection with a Federal contract, grant, loan, or cooperative agreement.

(3) The prohibitions of the Act do not apply under the following conditions:

(i) Agency and legislative liaison by own employees.

(A) The prohibition on the use of appropriated funds, in subparagraph (b)(1) of this clause, does not apply in the case of a payment of reasonable compensation made to an officer or employee of a person requesting or receiving a covered Federal action if the payment is for agency and legislative liaison activities not directly related to a covered Federal action.

(B) For purposes of subdivision (b)(3)(i)(A) of this clause, providing any information specifically requested by an agency or Congress is permitted at any time.

(C) The following agency and legislative liaison activities are permitted at any time where they are not related to a specific solicitation for any covered Federal action:

(1) Discussing with an agency the qualities and characteristics (including individual demonstrations) of the person's products or services, conditions or terms of sale, and service capabilities.

(2) Technical discussions and other activities regarding the application or adaptation of the person's products or services for an agency's use.

(D) The following agency and legislative liaison activities are permitted where they are prior to formal solicitation of any covered Federal action--

(1) Providing any information not specifically requested but necessary for an agency to make an informed decision about initiation of a covered Federal action;

(2) Technical discussions regarding the preparation of an unsolicited proposal prior to its official submission; and

(3) Capability presentations by persons seeking awards from an agency pursuant to the provisions of the Small Business Act, as amended by Pub. L. 95-507, and subsequent amendments.

(E) Only those services expressly authorized by subdivision (b)(3)(i)(A) of this clause are permitted under this clause.

(ii) Professional and technical services.

(A) The prohibition on the use of appropriated funds, in subparagraph (b)(1) of this clause, does not apply in the case of--

(1) A payment of reasonable compensation made to an officer or

employee of a person requesting or receiving a covered Federal action or an extension, continuation, renewal, amendment, or modification of a covered Federal action, if payment is for professional or technical services rendered directly in the preparation, submission, or negotiation of any bid, proposal, or application for that Federal action or for meeting requirements imposed by or pursuant to law as a condition for receiving that Federal action.

(2) Any reasonable payment to a person, other than an officer or employee of a person requesting or receiving a covered Federal action or an extension, continuation, renewal, amendment, or modification of a covered Federal action if the payment is for professional or technical services rendered directly in the preparation, submission, or negotiation of any bid, proposal, or application for that Federal action or for meeting requirements imposed by or pursuant to law as a condition for receiving that Federal action. Persons other than officers or employees of a person requesting or receiving a covered Federal action include consultants and trade associations.

(B) For purposes of subdivision (b)(3)(ii)(A) of this clause, "professional and technical services" shall be limited to advice and analysis directly applying any professional or technical discipline. For example, drafting of a legal document accompanying a bid or proposal by a lawyer is allowable. Similarly, technical advice provided by an engineer on the performance or operational capability of a piece of equipment rendered directly in the negotiation of a contract is allowable. However, communications with the intent to influence made by a professional (such as a licensed lawyer) or a technical person (such as a licensed accountant) are not allowable under this section unless they provide advice and analysis directly applying their professional or technical expertise and unless the advice or analysis is rendered directly and solely in the preparation, submission or negotiation of a covered Federal action. Thus, for example, communications with the intent to influence made by a lawyer that do not provide legal advice or analysis directly and solely related to the legal aspects of his or her client's proposal, but generally advocate one proposal over another are not allowable under this section because the lawyer is not providing professional legal services. Similarly, communications with the intent to influence made by an engineer providing an engineering analysis prior to the preparation or submission of a bid or proposal are not allowable under this section since the engineer is providing technical services but not directly in the preparation, submission or negotiation of a covered Federal action.

(C) Requirements imposed by or pursuant to law as a condition for receiving a covered Federal award include those required by law or regulation and any other requirements in the actual award documents.

(D) Only those services expressly authorized by subdivisions (b)(3)(ii)(A)(1) and (2) of this clause are permitted under this clause.

(E) The reporting requirements of FAR 3.803(a) shall not apply with respect to payments of reasonable compensation made to regularly employed officers or employees of a person.

(c) Disclosure.

(1) The Contractor who requests or receives from an agency a Federal contract shall file with that agency a disclosure form, OMB standard form LLL, Disclosure of Lobbying Activities, if such person has made or has agreed to make any payment using nonappropriated funds (to include profits from any covered Federal action), which would be prohibited under subparagraph (b)(1) of this clause, if paid for with appropriated funds.

(2) The Contractor shall file a disclosure form at the end of each calendar quarter in which there occurs any event that materially affects the accuracy of the information contained in any disclosure form previously filed by such person under subparagraph (c)(1) of this clause. An event that materially affects the accuracy of the information reported includes--

(i) A cumulative increase of $25,000 or more in the amount paid or expected to be paid for influencing or attempting to influence a covered Federal action; or

(ii) A change in the person(s) or individual(s) influencing or attempting to influence a covered Federal action; or

(iii) A change in the officer(s), employee(s), or Member(s) contacted to influence or attempt to influence a covered Federal action.

(3) The Contractor shall require the submittal of a certification, and if required, a disclosure form by any person who requests or receives any subcontract exceeding $100,000 under the Federal contract.

(4) All subcontractor disclosure forms (but not certifications) shall be forwarded from tier to tier until received by the prime Contractor. The prime Contractor shall submit all disclosures to the Contracting Officer at the end of the calendar quarter in which the disclosure form is submitted by the subcontractor. Each subcontractor certification shall be retained in the subcontract file of the awarding Contractor.

(d) Agreement. The Contractor agrees not to make any payment prohibited by this clause.

(e) Penalties.

(1) Any person who makes an expenditure prohibited under paragraph (a) of this clause or who fails to file or amend the disclosure form to be filed or amended by paragraph (b) of this clause shall be subject to civil penalties as provided for by 31 U.S.C. 1352. An imposition of a civil penalty does not prevent the Government from seeking any other remedy that may be applicable.

(2) Contractors may rely without liability on the representation made by their subcontractors in the certification and disclosure form.

(f) Cost allowability. Nothing in this clause makes allowable or reasonable any costs which would otherwise be unallowable or unreasonable. Conversely, costs made specifically unallowable by the requirements in this clause will not be made allowable under any other provision.

(End of clause)

11 52.204-4 PRINTING/COPYING DOUBLE-SIDED ON RECYCLED PAPER (JUN 1996)

(a) In accordance with Executive Order 12873, dated October 20, 1993, as amended by Executive Order 12995, dated March 25, 1996, the Offeror/Contractor is encouraged to submit paper documents, such as offers, letters, or reports, that are printed/copied double-sided on recycled paper that has at least 20 percent postconsumer material.

(b) The 20 percent standard applies to high-speed copier paper, offset paper, forms bond, computer printout paper, carbonless paper, file folders, white woven envelopes, and other uncoated printed and writing paper, such as writing and office paper, book paper, cotton fiber paper, and cover stock. An alternative to meeting the 20 percent postconsumer material standard is 50 percent recovered material content of certain industrial by-products.

(End of clause)

12 52.209-6 PROTECTING THE GOVERNMENT'S INTEREST WHEN SUBCONTRACTING WITH CONTRACTORS DEBARRED, SUSPENDED, OR PROPOSED FOR DEBARMENT (JUL 1995)

(a) The Government suspends or debars Contractors to protect the Government's interest. The Contractor shall not enter into any subcontract in excess of $25,000 with a Contractor that is debarred, suspended, or proposed for debarment unless there is a compelling reason to do so.

(b) The Contractor shall require each proposed first-tier subcontractor, whose subcontract will exceed $25,000, to disclose to the Contractor, in writing, whether as of the time of award of the subcontract, the subcontractor, or its principals, is or is not debarred, suspended, or proposed for debarment by the Federal Government.

(c) A corporate officer or a designee of the Contractor shall notify the Contracting Officer, in writing, before entering into a subcontract with a party that is debarred, suspended, or proposed for debarment (see FAR 9.404 for information on the List of Parties Excluded from Federal Procurement and Nonprocurement Programs). The notice must include the following:

(1) The name of the subcontractor.

(2) The Contractor's knowledge of the reasons for the subcontractor being on the List of Parties Excluded from Federal Procurement and Nonprocurement Programs.

(3) The compelling reason(s) for doing business with the subcontractor notwithstanding its inclusion on the List of Parties Excluded from Federal Procurement and Nonprocurement Programs.

(4) The systems and procedures the Contractor has established to ensure that it is fully protecting the Government's interests when dealing with such subcontractor in view of the specific basis for the party's debarment, suspension, or proposed debarment.

(End of clause)

13 52.211-2 AVAILABILITY OF SPECIFICATIONS LISTED IN THE DOD INDEX OF SPECIFICATIONS AND STANDARDS (DODISS) (JUN 1997)

Single copies of specifications cited in this solicitation may be obtained by submitting a written request to the supply point listed below. The request must contain the title of the specification, its number, date, applicable amendment(s), and the solicitation or contract number. A telephone order entry system is available with the use of a touch tone telephone. A Customer Number is required to use this system and may be obtained by written request to the address listed below or by telephone (215-697-2179). In case of urgency, telegraphic requests are acceptable. Voluntary standards, which are not available to Offerors and Contractors from Government sources, may be obtained from the organization responsible for their preparation, maintenance, or publication.

Standardization Document
Order Desk, Building 4, Section D
700 Robbins Avenue
Philadelphia, PA 19111-5094
Facsimile No.....215-697-2978

(End of provision)

14 52.211-15 DEFENSE PRIORITY AND ALLOCATION REQUIREMENTS (SEP 1990)

This is a rated order certified for national defense use, and the Contractor shall follow all the requirements of the Defense Priorities and Allocations System regulation (15 CFR 700).

(End of clause)

15 52.214-26 AUDIT AND RECORDS--SEALED BIDDING (OCT 1997)

(a) As used in this clause, records includes books, documents, accounting procedures and practices, and other data, regardless of type and regardless of whether such items are in written form, in the form of computer data, or in any other form.

(b) Cost or pricing data. If the Contractor has been required to submit cost or pricing data in connection with the pricing of any modification to this contract, the Contracting Officer, or an authorized representative of the Contracting Officer, in order to evaluate the accuracy, completeness, and currency of the cost or pricing data, shall have the right to examine and audit all of the Contractor's records, including computations and projections, related to--

(1) The proposal for the modification;

(2) The discussions conducted on the proposal(s), including those related to negotiating;

(3) Pricing of the modification; or

(4) Performance of the modification.

(c) Comptroller General. In the case of pricing any modification, the Comptroller General of the United States, or an authorized representative, shall have the same rights as specified in paragraph (b) of this clause.

(d) Availability. The Contractor shall make available at its office at

all reasonable times the materials described in reproduction, until 3 years after final payment under this contract, or for any other period specified in Subpart 4.7 of the Federal Acquisition Regulation (FAR). FAR Subpart 4.7, Contractor Records Retention, in effect on the data of this contract, is incorporated by reference in its entirety and made a part of this contract.

(1) If this contract is completely or partially terminated, the records relating to the work terminated shall be made available for 3 years after any resulting final termination settlement.

(2) Records pertaining to appeals under the Disputes clause or to litigation or the settlement of claims arising under or relating to the performance of this contract shall be made available until disposition of such appeals, litigation, or claims.

(e) The Contractor shall insert a clause containing all the provisions of this clause, including this paragraph (e), in all subcontracts expected to exceed the threshold in FAR 15.403-4(a)(1) for submission of cost or pricing data.

(End of clause)

16 52.214-27 PRICE REDUCTION FOR DEFECTIVE COST OR PRICING DATA–MODIFICATIONS--SEALED BIDDING (OCT 1997)

(a) This clause shall become operative only for any modification to this contract involving aggregate increases and/or decreases in costs, plus applicable profits, expected to exceed the threshold for the submission of cost or pricing data at FAR 15.403-4(a)(1), except that this clause does not apply to a modification if an exception under FAR 15.403-1(b) applies.

(b) If any price, including profit, negotiated in connection with any modification under this clause, was increased by any significant amount because (1) the Contractor or a subcontractor furnished cost or pricing data that were not complete, accurate, and current as certified in its Certificate of Current Cost or Pricing Data, (2) a subcontractor or prospective subcontractor furnished the Contractor cost or pricing data that were not complete, accurate, and current as certified in the Contractor's Certificate of Current Cost or Pricing Data, or (3) any of these parties furnished data of any description that were not accurate, the price shall be reduced accordingly and the contract shall be modified to reflect the reduction. This right to a price reduction is limited to that resulting from defects in data relating to modifications for which this clause becomes operative under paragraph (a) above.

(c) Any reduction in the contract price under paragraph (b) above due to defective data from a prospective subcontractor that was not subsequently awarded the subcontract shall be limited to the amount, plus applicable overhead and profit markup, by which (1) the actual subcontract or (2) the actual cost to the Contractor, if there was no subcontract, was less than the prospective subcontract cost estimate submitted by the Contractor; provided, that the actual subcontract price was not itself affected by defective cost or pricing data.

(d)(1) If the Contracting Officer determines under paragraph (b) of this clause that a price or cost reduction should be made, the Contractor agrees not to raise the following matters as a defense:

(i) The Contractor or subcontractor was a sole source supplier or otherwise was in a superior bargaining position and thus the price of the contract would not have been modified even if accurate, complete, and current cost or pricing data had been submitted.

(ii) The Contracting Officer should have known that the cost or pricing data in issue were defective even though the Contractor or subcontractor took no affirmative action to bring the character of the data to the attention of the Contracting Officer.

(iii) The contract was based on an agreement about the total cost of the contract and there was no agreement about the cost of each item procured under the contract.

(iv) The Contractor or subcontractor did not submit a Certificate of Current Cost or Pricing Data.

(2)(i) Except as prohibited by subdivision (d)(2)(ii) of this clause, an offset in an amount determined appropriate by the Contracting Officer based upon the facts shall be allowed against the amount of a contract price reduction if--

(A) The Contractor certifies to the Contracting Officer that, to the best of the Contractor's knowledge and belief, the Contractor is entitled to the offset in the amount requested; and

(B) The Contractor proves that the cost or pricing data were available before the date of agreement on the price of the contract (or price of the modification) and that the data were not submitted before such date.

(ii) An offset shall not be allowed if--

(A) The understated data was known by the Contractor to be understated when the Certificate of Current Cost or Pricing Data was signed; or

(B) The Government proves that the facts demonstrate that the contract price would not have increased in the amount to be offset even if the available data had been submitted before the date of agreement on price.

(e) If any reduction in the contract price under this clause reduces the price of items for which payment was made prior to the date of the modification reflecting the price reduction, the Contractor shall be liable to and shall pay the United States at the time such overpayment is repaid--

(1) Simple interest on the amount of such overpayment to be computed from the date(s) of overpayment to the Contractor to the date the Government is repaid by the Contractor at the applicable underpayment rate effective for each quarter prescribed by the Secretary of the Treasury under 26 U.S.C. 6621(a)(2); and

(2) A penalty equal to the amount of the overpayment, if the Contractor or subcontractor knowingly submitted cost or pricing data which were incomplete, inaccurate, or noncurrent.

(End of clause)

17 52.214-28 SUBCONTRACTOR COST OR PRICING DATA--MODIFICATIONS--SEALED BIDDING (OCT 1997)

(a) The requirements of paragraphs (b) and (c) of this clause shall (1) become operative only for any modification to this contract involving

aggregate increases and/or decreases in costs, plus applicable profits, expected to exceed the threshold for submission of cost or pricing data at FAR 15.403-4(a)(1), and (2) be limited to such modifications.

(b) Before awarding any subcontract expected to exceed the threshold for submission of cost or pricing data at FAR 15.403-4(a)(1), on the date of agreement on price or the date of award, whichever is later; or before pricing any subcontract modifications involving aggregate increases and/or decreases in costs, plus applicable profits, expected to exceed the threshold for submission of cost or pricing data at FAR 15.403-4(a)(1), the Contractor shall require the subcontractor to submit cost or pricing data (actually or by specific identification in writing), unless an exception under FAR 15.403-1(b) applies.

(c) The Contractor shall require the subcontractor to certify in substantially the form prescribed in subsection FAR 15.406-2 that, to the best of its knowledge and belief, the data submitted under paragraph (b) of this clause were accurate, complete, and current as of the date of agreement on the negotiated price of the subcontract or subcontract modification.

(d) The Contractor shall insert the substance of this clause, including this paragraph (d), in each subcontract that, when entered into, exceeds the threshold for submission of cost or pricing data at FAR 15.403-4(a)(1).

(End of clause)

18 52.214-29 ORDER OF PRECEDENCE--SEALED BIDDING (JAN 1986)

Any inconsistency in this solicitation or contract shall be resolved by giving precedence in the following order: (a) the Schedule (excluding the specifications); (b) representations and other instructions; (c) contract clauses; (d) other documents, exhibits, and attachments; and (e) the specifications.

(End of clause)

19 52.219-8 UTILIZATION OF SMALL, SMALL DISADVANTAGED AND WOMEN-OWNED SMALL BUSINESS CONCERNS (JUN 1997)

(a) It is the policy of the United States that small business concerns, small business concerns owned and controlled by socially and economically disadvantaged individuals and small business concerns owned and controlled by women shall have the maximum practicable opportunity to participate in performing contracts let by any Federal agency, including contracts and subcontracts for subsystems, assemblies, components, and related services for major systems. It is further the policy of the United States that its prime contractors establish procedures to ensure the timely payment of amounts due pursuant to the terms of their subcontracts with small business concerns, small business concerns owned and controlled by socially and economically disadvantaged individuals and small business concerns owned and controlled by women.

(b) The Contractor hereby agrees to carry out this policy in the awarding of subcontracts to the fullest extent consistent with efficient contract performance. The Contractor further agrees to cooperate in any studies or

surveys as may be conducted by the United States Small Business Administration or the awarding agency of the United States as may be necessary to determine the extent of the Contractor's compliance with this clause.

(c) As used in this contract, the term "small business concern" shall mean a small business as defined pursuant to section 3 of the Small Business Act and relevant regulations promulgated pursuant thereto. The term "small business concern owned and controlled by socially and economically disadvantaged individuals" shall mean a small business concern (1) which is at least 51 percent unconditionally owned by one or more socially and economically disadvantaged individuals; or, in the case of any publicly owned business, at least 51 per centum of the stock of which is unconditionally owned by one or more socially and economically disadvantaged individuals; and (2) whose management and daily business operations are controlled by one or more of such individuals. This term also means a small business concern that is at least 51 percent unconditionally owned by an economically disadvantaged Indian tribe or Native Hawaiian Organization, or a publicly owned business having at least 51 percent of its stock unconditionally owned by one of these entities which has its management and daily business controlled by members of an economically disadvantaged Indian tribe or Native Hawaiian Organization, and which meets the requirements of 13 CFR 124. The Contractor shall presume that socially and economically disadvantaged individuals include Black Americans, Hispanic Americans, Native Americans, Asian-Pacific Americans, Subcontinent Asian Americans, and other minorities, or any other individual found to be disadvantaged by the Administration pursuant to section 8(a) of the Small Business Act. The Contractor shall presume that socially and economically disadvantaged entities also include Indian Tribes and Native Hawaiian Organizations.

(d) The term "small business concern owned and controlled by women" shall mean a small business concern (1) which is at least 51 percent owned by one or more women, or, in the case of any publicly owned business, at least 51 percent of the stock of which is owned by one or more women, and (2) whose management and daily business operations are controlled by one or more women; and

(e) Contractors acting in good faith may rely on written representations by their subcontractors regarding their status as a small business concern, a small business concern owned and controlled by socially and economically disadvantaged individuals or a small business concern owned and controlled by women.

(End of clause)

20 52.219-9 I SMALL, SMALL DISADVANTAGED AND WOMEN-OWNED SMALL BUSINESS SUBCONTRACTING PLAN (AUG 1996)--ALTERNATE I (OCT 1995)

(a) This clause does not apply to small business concerns.

(b) "Commercial product," as used in this clause, means a product in regular production that is sold in substantial quantities to the general public and/or industry at established catalog or market prices. It also means a product which, in the opinion of the Contracting Officer, differs only insignificantly from the Contractor's commercial product.

"Subcontract," as used in this clause, means any agreement (other than one involving an employer-employee relationship) entered into by a Federal Government prime Contractor or subcontractor calling for supplies or services required for performance of the contract or subcontract.

(c) The apparent low bidder, upon request by the Contracting Officer, shall submit a subcontracting plan, where applicable, which separately addresses subcontracting with small business concerns, with small disadvantaged business concerns and with women-owned small business concerns. If the bidder is submitting an individual contract plan, the plan must separately address subcontracting with small business concerns, small disadvantaged business concerns and women-owned small business concerns, with a separate part for the basic contract and separate parts for each option (if any). The plan shall be included in and made a part of the resultant contract. The subcontracting plan shall be submitted within the time specified by the Contracting Officer. Failure to submit the subcontracting plan shall make the bidder ineligible for the award of a contract.

(d) The offeror's subcontracting plan shall include the following:

(1) Goals, expressed in terms of percentages of total planned subcontracting dollars, for the use of small business concerns, small disadvantaged business concerns and women-owned small business concerns as subcontractors. The offeror shall include all subcontracts that contribute to contract performance, and may include a proportionate share of products and services that are normally allocated as indirect costs.

(2) A statement of--

(i) Total dollars planned to be subcontracted;

(ii) Total dollars planned to be subcontracted to small business concerns;

(iii) Total dollars planned to be subcontracted to small disadvantaged business concerns; and

(iv) Total dollars planned to be subcontracted to women-owned small business concerns.

(3) A description of the principal types of supplies and services to be subcontracted, and an identification of the types planned for subcontracting to (i) small business concerns, (ii) small disadvantaged business concerns and (iii) women-owned small business concerns.

(4) A description of the method used to develop the subcontracting goals in paragraph (d)(1) of this clause.

(5) A description of the method used to identify potential sources for solicitation purposes (e.g., existing company source lists, the Procurement Automated Source System (PASS) of the Small Business Administration, the National Minority Purchasing Council Vendor Information Service, the Research and Information Division of the Minority Business Development Agency in the Department of Commerce, or small, small disadvantaged and women-owned small business concerns trade associations). A firm may rely on the information contained in PASS as an accurate representation of a concern's size and ownership characteristics for purposes of maintaining a small business source list. A firm may rely on PASS as its small business source list. Use of the PASS as its source list does not relieve a firm of its responsibilities (e.g., outreach, assistance, counseling, publicizing subcontracting opportunities) in this clause.

(6) A statement as to whether or not the offeror included indirect costs in establishing subcontracting goals, and a description of the method used to determine the proportionate share of indirect costs to be incurred with (i) small business concerns, (ii) small disadvantaged business concerns, and (iii) women-owned small business concerns.

(7) The name of the individual employed by the offeror who will administer the offeror's subcontracting program, and a description of the duties of the individual.

(8) A description of the efforts the offeror will make to assure that small, small disadvantaged and women-owned small business concerns have an equitable opportunity to compete for subcontracts.

(9) Assurances that the offeror will include the clause in this contract entitled "Utilization of Small, Small Disadvantaged and Women-Owned Small Business Concerns" in all subcontracts that offer further subcontracting opportunities, and that the offeror will require all subcontractors (except small business concerns) who receive subcontracts in excess of $500,000 ($1,000,000 for construction of any public facility) to adopt a plan similar to the plan agreed to by the offeror.

(10) Assurances that the offeror will (i) cooperate in any studies or surveys as may be required, (ii) submit periodic reports in order to allow the Government to determine the extent of compliance by the offeror with the subcontracting plan, (iii) submit Standard Form (SF) 294, Subcontracting Report for Individual Contracts, and/or SF 295, Summary Subcontract Report, in accordance with the instructions on the forms, and (iv) ensure that its subcontractors agree to submit Standard Forms 294 and 295.

(11) A recitation of the types of records the offeror will maintain to demonstrate procedures that have been adopted to comply with the requirements and goals in the plan, including establishing source lists; and a description of its efforts to locate small, small disadvantaged and women-owned small business concerns and award subcontracts to them. The records shall include at least the following (on a plant-wide or company-wide basis, unless otherwise indicated):

(i) Source lists (e.g., PASS), guides, and other data that identify small, small disadvantaged and women-owned small business concerns.

(ii) Organizations contacted in an attempt to locate sources that are small, small disadvantaged or women-owned small business concerns.

(iii) Records on each subcontract solicitation resulting in an award of more than $100,000, indicating (A) whether small business concerns were solicited and if not, why not, (B) whether small disadvantaged business concerns were solicited and if not, why not, (C) whether women-owned small business concerns were solicited and if not, why not, and (D) if applicable, the reason award was not made to a small business concern.

(iv) Records of any outreach efforts to contact (A) trade associations, (B) business development organizations, and (C) conferences and trade fairs to locate small, small disadvantaged and women-owned small business sources.

(v) Records of internal guidance and encouragement provided to buyers through (A) workshops, seminars, training, etc., and (B) monitoring performance to evaluate compliance with the program's requirements.

(vi) On a contract-by-contract basis, records to support award data submitted by the offeror to the Government, including the name, address, and business size of each subcontractor. Contractors having company or division-wide annual plans need not comply with this requirement.

(e) In order to effectively implement this plan to the extent consistent with efficient contract performance, the Contractor shall perform the following functions:

(1) Assist small, small disadvantaged and women-owned small business concerns by arranging solicitations, time for the preparation of bids, quantities, specifications, and delivery schedules so as to facilitate the participation by such concerns. Where the contractor's lists of potential small, small disadvantaged and women-owned small business subcontractors are excessively long, reasonable effort shall be made to give all such small business concerns an opportunity to compete over a period of time.

(2) Provide adequate and timely consideration of the potentialities of small, small disadvantaged and women-owned small business concerns in all "make-or-buy" decisions.

(3) Counsel and discuss subcontracting opportunities with representatives of small, small disadvantaged and women-owned small business firms.

(4) Provide notice to subcontractors concerning penalties and remedies for misrepresentations of business status as small, small disadvantaged or women-owned small business for the purpose of obtaining a subcontract that is to be included as part or all of a goal contained in the Contractor's subcontracting plan.

(f) A master subcontracting plan on a plant or division-wide basis which contains all the elements required by (d) above, except goals, may be incorporated by reference as a part of the subcontracting plan required of the offeror by this clause; provided, (1) the master plan has been approved, (2) the offeror provides copies of the approved master plan and evidence of its approval to the Contracting Officer, and (3) goals and any deviations from the master plan deemed necessary by the Contracting Officer to satisfy the requirements of this contract are set forth in the individual subcontracting plan.

(g)(1) If a commercial product is offered, the subcontracting plan required by this clause may relate to the offeror's production generally, for both commercial and noncommercial products, rather than solely to the Government contract. In these cases, the offeror shall, with the concurrence of the Contracting Officer, submit one company-wide or division-wide annual plan.

(2) The annual plan shall be reviewed for approval by the agency awarding the offeror its first prime contract requiring a subcontracting plan during the fiscal year, or by an agency satisfactory to the Contracting Officer.

(3) The approved plan shall remain in effect during the offeror's fiscal year for all of the offeror's commercial products.

(h) Prior compliance of the offeror with other such subcontracting plans under previous contracts will be considered by the Contracting Officer in determining the responsibility of the offeror for award of the contract.

(i) The failure of the Contractor or subcontractor to comply in good

faith with (1) the clause of this contract entitled "Utilization Of Small, Small Disadvantaged and Women-Owned Small Business Concerns," or (2) an approved plan required by this clause, shall be a material breach of the contract.

(End of clause)

21 52.219-16 LIQUIDATED DAMAGES--SUBCONTRACTING PLAN (OCT 1995)

(a) "Failure to make a good faith effort to comply with the subcontracting plan," as used in this clause, means a willful or intentional failure to perform in accordance with the requirements of the subcontracting plan approved under the clause in this contract entitled "Small, Small Disadvantaged and Women-Owned Small Business Subcontracting Plan," or willful or intentional action to frustrate the plan.

(b) If, at contract completion, or in the case of a commercial product plan, at the close of the fiscal year for which the plan is applicable, the Contractor has failed to meet its subcontracting goals and the Contracting Officer decides in accordance with paragraph (c) of this clause that the Contractor failed to make a good faith effort to comply with its subcontracting plan, established in accordance with the clause in this contract entitled "Small, Small Disadvantaged and Women-Owned Small Business Subcontracting Plan," the Contractor shall pay the Government liquidated damages in an amount stated. The amount of probable damages attributable to the Contractor's failure to comply, shall be an amount equal to the actual dollar amount by which the Contractor failed to achieve each subcontract goal or, in the case of a commercial products plan, that portion of the dollar amount allocable to Government contracts by which the Contractor failed to achieve each subcontract goal.

(c) Before the Contracting Officer makes a final decision that the Contractor has failed to make such good faith effort, the Contracting Officer shall give the Contractor written notice specifying the failure and permitting the Contractor to demonstrate what good faith efforts have been made. Failure to respond to the notice may be taken as an admission that no valid explanation exists. If, after consideration of all the pertinent data, the Contracting Officer finds that the Contractor failed to make a good faith effort to comply with the subcontracting plan, the Contracting Officer shall issue a final decision to that effect and require that the Contractor pay the Government liquidated damages as provided in paragraph (b) of this clause.

(d) With respect to commercial product plans; i.e., company-wide or division-wide subcontracting plans approved under paragraph (g) of the clause in this contract entitled "Small, Small Disadvantaged and Women-Owned Small Business Subcontracting Plan," the Contracting Officer of the agency that originally approved the plan will exercise the functions of the Contracting Officer under this clause on behalf of all agencies that awarded contracts covered by that commercial product plan.

(e) The Contractor shall have the right of appeal, under the clause in this contract entitled, Disputes, from any final decision of the Contracting Officer.

(f) Liquidated damages shall be in addition to any other remedies that the Government may have.

(End of clause)

22 52.222-3 CONVICT LABOR (AUG 1996)

The Contractor agrees not to employ in the performance of this contract any person undergoing a sentence of imprisonment which has been imposed by any court of a State, the District of Columbia, the Commonwealth of Puerto Rico, the Virgin Islands, Guam, American Samoa, the Commonwealth of the Northern Mariana Islands, or the Trust Territory of the Pacific Islands. This limitation, however, shall not prohibit the employment by the Contractor in the performance of this contract of persons on parole or probation to work at paid employment during the term of their sentence or persons who have been pardoned or who have served their terms. Nor shall it prohibit the employment by the Contractor in the performance of this contract of persons confined for violation of the laws of any of the States, the District of Columbia, the Commonwealth of Puerto Rico, the Virgin Islands, Guam, American Samoa, the Commonwealth of the Northern Mariana Islands, or the Trust Territory of the Pacific Islands who are authorized to work at paid employment in the community under the laws of such jurisdiction, if--

(a)(1) The worker is paid or is in an approved work training program on a voluntary basis;

(2) Representatives of local union central bodies or similar labor union organizations have been consulted;

(3) Such paid employment will not result in the displacement of employed workers, or be applied in skills, crafts, or trades in which there is a surplus of available gainful labor in the locality, or impair existing contracts for services; and

(4) The rates of pay and other conditions of employment will not be less than those paid or provided for work of a similar nature in the locality in which the work is being performed; and

(b) The Attorney General of the United States has certified that the work-release laws or regulations of the jurisdiction involved are in conformity with the requirements of Executive Order 11755, as amended by Executive Orders 12608 and 12943.

(End of clause)

23 52.222-4 CONTRACT WORK HOURS AND SAFETY STANDARDS ACT—OVERTIME COMPENSATION (JUL 1995)

(a) Overtime requirements. No Contractor or subcontractor contracting for any part of the contract work which may require or involve the employment of laborers or mechanics (see Federal Acquisition Regulation (FAR) 22.300) shall require or permit any such laborers or mechanics in any workweek in which the individual is employed on such work to work in excess of 40 hours in such workweek unless such laborer or mechanic receives compensation at a rate not less than 1 1/2 times the basic rate of pay for all hours worked in excess of 40 hours in such workweek.

(b) Violation; liability for unpaid wages; liquidated damages. In the event of any violation of the provisions set forth in paragraph (a) of this clause, the Contractor and any subcontractor responsible therefor shall be liable for the unpaid wages. In addition, such Contractor and subcontractor shall be liable to the United States (in the case of work

done under contract for the District of Columbia or a territory, to such District or to such territory), for liquidated damages. Such liquidated damages shall be computed with respect to each individual laborer or mechanic employed in violation of the provisions set forth in paragraph (a) of this clause in the sum of $10 for each calendar day on which such individual was required or permitted to work in excess of the standard workweek of 40 hours without payment of the overtime wages required by provisions set forth in paragraph (a) of this clause.

(c) Withholding for unpaid wages and liquidated damages. The Contracting Officer shall upon his or her own action or upon written request of an authorized representative of the Department of Labor withhold or cause to be withheld, from any moneys payable on account of work performed by the Contractor or subcontractor under any such contract or any other Federal contract with the same Prime Contractor, or any other Federally-assisted contract subject to the Contract Work Hours and Safety Standards Act which is held by the same Prime Contractor, such sums as may be determined to be necessary to satisfy any liabilities of such Contractor or subcontractor for unpaid wages and liquidated damages as provided in the provisions set forth in paragraph (b) of this clause.

(d) Payrolls and basic records. (1) The Contractor or subcontractor shall maintain payrolls and basic payroll records during the course of contract work and shall preserve them for a period of 3 years from the completion of the contract for all laborers and mechanics working on the contract. Such records shall contain the name and address of each such employee, social security number, correct classifications, hourly rates of wages paid, daily and weekly number of hours worked, deductions made, and actual wages paid. Nothing in this paragraph shall require the duplication of records required to be maintained for construction work by Department of Labor regulations at 29 CFR 5.5(a)(3) implementing the Davis-Bacon Act.

(2) The records to be maintained under paragraph (d)(1) of this clause shall be made available by the Contractor or subcontractor for inspection, copying, or transcription by authorized representatives of the Contracting Officer or the Department of Labor. The Contractor or subcontractor shall permit such representatives to interview employees during working hours on the job.

(e) Subcontracts. The Contractor or subcontractor shall insert in any subcontracts exceeding $100,000, the provisions set forth in paragraphs (a) through (e) of this clause and also a clause requiring the subcontractors to include these provisions in any lower tier subcontracts. The Prime Contractor shall be responsible for compliance by any subcontractor or lower tier subcontractor with the provisions set forth in paragraphs (a) through (e) of this clause.

(End of clause)

24 52.222-6 DAVIS-BACON ACT (FEB 1995)

(a) All laborers and mechanics employed or working upon the site of the work will be paid unconditionally and not less often than once a week, and without subsequent deduction or rebate on any account (except such payroll deductions as are permitted by regulations issued by the Secretary of Labor under the Copeland Act (29 CFR Part 3)), the full amount of wages and bona

fide fringe benefits (or cash equivalents thereof) due at time of payment computed at rates not less than those contained in the wage determination of the Secretary of Labor which is attached hereto and made a part hereof, regardless of any contractual relationship which may be alleged to exist between the Contractor and such laborers and mechanics. Contributions made or costs reasonably anticipated for bona fide fringe benefits under section 1(b)(2) of the Davis-Bacon Act on behalf of laborers or mechanics are considered wages paid to such laborers or mechanics, subject to the provisions of paragraph (d) of this clause; also, regular contributions made or costs incurred for more than a weekly period (but not less often than quarterly) under plans, funds, or programs which cover the particular weekly period, are deemed to be constructively made or incurred during such period. Such laborers and mechanics shall be paid not less than the appropriate wage rate and fringe benefits in the wage determination for the classification of work actually performed, without regard to skill, except as provided in the clause entitled Apprentices and Trainees. Laborers or mechanics performing work in more than one classification may be compensated at the rate specified for each classification for the time actually worked therein; provided, that the employer's payroll records accurately set forth the time spent in each classification in which work is performed. The wage determination (including any additional classifications and wage rates conformed under paragraph (b) of this clause) and the Davis-Bacon poster (WH-1321) shall be posted at all times by the Contractor and its subcontractors at the site of the work in a prominent and accessible place where it can be easily seen by the workers.

(b)(1) The Contracting Officer shall require that any class of laborers or mechanics which is not listed in the wage determination and which is to be employed under the contract shall be classified in conformance with the wage determination. The Contracting Officer shall approve an additional classification and wage rate and fringe benefits therefor only when all the following criteria have been met:

(i) The work to be performed by the classification requested is not performed by a classification in the wage determination.

(ii) The classification is utilized in the area by the construction industry.

(iii) The proposed wage rate, including any bona fide fringe benefits, bears a reasonable relationship to the wage rates contained in the wage determination.

(iv) With respect to helpers, such a classification prevails in the area in which the work is performed.

(2) If the Contractor and the laborers and mechanics to be employed in the classification (if known), or their representatives, and the Contracting Officer agree on the classification and wage rate (including the amount designated for fringe benefits, where appropriate), a report of the action taken shall be sent by the Contracting Officer to the Administrator of the Wage and Hour Division, Employment Standards Administration, U.S. Department of Labor, Washington, DC 20210. The Administrator or an authorized representative will approve, modify, or disapprove every additional classification action within 30 days of receipt and so advise the Contracting Officer or will notify the Contracting Officer within the 30-day period that additional time is necessary.

(3) In the event the Contractor, the laborers or mechanics to be employed in the classification, or their representatives, and the Contracting Officer do not agree on the proposed classification and wage rate (including the amount designated for fringe benefits, where appropriate), the Contracting Officer shall refer the questions, including the views of all interested parties and the recommendation of the Contracting Officer, to the Administrator of the Wage and Hour Division for determination. The Administrator, or an authorized representative, will issue a determination within 30 days of receipt and so advise the Contracting Officer or will notify the Contracting Officer within the 30-day period that additional time is necessary.

(4) The wage rate (including fringe benefits, where appropriate) determined pursuant to subparagraphs (b)(2) and (b)(3) of this clause shall be paid to all workers performing work in the classification under this contract from the first day on which work is performed in the classification.

(c) Whenever the minimum wage rate prescribed in the contract for a class of laborers or mechanics includes a fringe benefit which is not expressed as an hourly rate, the Contractor shall either pay the benefit as stated in the wage determination or shall pay another bona fide fringe benefit or an hourly cash equivalent thereof.

(d) If the Contractor does not make payments to a trustee or other third person, the Contractor may consider as part of the wages of any laborer or mechanic the amount of any costs reasonably anticipated in providing bona fide fringe benefits under a plan or program; provided, that the Secretary of Labor has found, upon the written request of the Contractor, that the applicable standards of the Davis-Bacon Act have been met. The Secretary of Labor may require the Contractor to set aside in a separate account assets for the meeting of obligations under the plan or program.

(End of clause)

25 52.222-7 WITHHOLDING OF FUNDS (FEB 1988)

The Contracting Officer shall, upon his or her own action or upon written request of an authorized representative of the Department of Labor, withhold or cause to be withheld from the Contractor under this contract or any other Federal contract with the same Prime Contractor, or any other Federally assisted contract subject to Davis-Bacon prevailing wage requirements, which is held by the same Prime Contractor, so much of the accrued payments or advances as may be considered necessary to pay laborers and mechanics, including apprentices, trainees, and helpers, employed by the Contractor or any subcontractor the full amount of wages required by the contract. In the event of failure to pay any laborer or mechanic, including any apprentice, trainee, or helper, employed or working on the site of the work, all or part of the wages required by the contract, the Contracting Officer may, after written notice to the Contractor, take such action as may be necessary to cause the suspension of any further payment, advance, or guarantee of funds until such violations have ceased.

(End of clause)

(a) Payrolls and basic records relating thereto shall be maintained by the Contractor during the course of the work and preserved for a period of 3 years thereafter for all laborers and mechanics working at the site of the work. Such records shall contain the name, address, and social security number of each such worker, his or her correct classification, hourly rates of wages paid (including rates of contributions or costs anticipated for bona fide fringe benefits or cash equivalents thereof of the types described in section 1(b)(2)(B) of the Davis-Bacon Act), daily and weekly number of hours worked, deductions made, and actual wages paid. Whenever the Secretary of Labor has found, under paragraph (d) of the clause entitled Davis-Bacon Act, that the wages of any laborer or mechanic include the amount of any costs reasonably anticipated in providing benefits under a plan or program described in section 1(b)(2)(B) of the Davis-Bacon Act, the Contractor shall maintain records which show that the commitment to provide such benefits is enforceable, that the plan or program is financially responsible, and that the plan or program has been communicated in writing to the laborers or mechanics affected, and records which show the costs anticipated or the actual cost incurred in providing such benefits. Contractors employing apprentices or trainees under approved programs shall maintain written evidence of the registration of apprenticeship programs and certification of trainee programs, the registration of apprentices and trainees, and the ratios and wage rates prescribed in the applicable programs.

(b)(1) The Contractor shall submit weekly for each week in which any contract work is performed a copy of all payrolls to the Contracting Officer. The payrolls submitted shall set out accurately and completely all of the information required to be maintained under paragraph (a) of this clause. This information may be submitted in any form desired. Optional Form WH-347 (Federal Stock Number 029-005-00014-1) is available for this purpose and may be purchased from the Superintendent of Documents, U.S. Government Printing Office, Washington, DC 20402. The Prime Contractor is responsible for the submission of copies of payrolls by all subcontractors.

(2) Each payroll submitted shall be accompanied by a "Statement of Compliance," signed by the Contractor or subcontractor or his or her agent who pays or supervises the payment of the persons employed under the contract and shall certify--

(i) That the payroll for the payroll period contains the information required to be maintained under paragraph (a) of this clause and that such information is correct and complete;

(ii) That each laborer or mechanic (including each helper, apprentice, and trainee) employed on the contract during the payroll period has been paid the full weekly wages earned, without rebate, either directly or indirectly, and that no deductions have been made either directly or indirectly from the full wages earned, other than permissible deductions as set forth in the Regulations, 29 CFR Part 3; and

(iii) That each laborer or mechanic has been paid not less than the applicable wage rates and fringe benefits or cash equivalents for the classification of work performed, as specified in the applicable wage

determination incorporated into the contract.

(3) The weekly submission of a properly executed certification set forth on the reverse side of Optional Form WH-347 shall satisfy the requirement for submission of the "Statement of Compliance" required by subparagraph (b)(2) of this clause.

(4) The falsification of any of the certifications in this clause may subject the Contractor or subcontractor to civil or criminal prosecution under Section 1001 of Title 18 and Section 3729 of Title 31 of the United States Code.

(c) The Contractor or subcontractor shall make the records required under paragraph (a) of this clause available for inspection, copying, or transcription by the Contracting Officer or authorized representatives of the Contracting Officer or the Department of Labor. The Contractor or subcontractor shall permit the Contracting Officer or representatives of the Contracting Officer or the Department of Labor to interview employees during working hours on the job. If the Contractor or subcontractor fails to submit required records or to make them available, the Contracting Officer may, after written notice to the Contractor, take such action as may be necessary to cause the suspension of any further payment. Furthermore, failure to submit the required records upon request or to make such records available may be grounds for debarment action pursuant to 29 CFR 5.12.

(End of clause)

27 52.222-9 APPRENTICES AND TRAINEES (FEB 1988)

(a) Apprentices. Apprentices will be permitted to work at less than the predetermined rate for the work they performed when they are employed pursuant to and individually registered in a bona fide apprenticeship program registered with the U.S. Department of Labor, Employment and Training Administration, Bureau of Apprenticeship and Training, or with a State Apprenticeship Agency recognized by the Bureau, or if a person is employed in his or her first 90 days of probationary employment as an apprentice in such an apprenticeship program, who is not individually registered in the program, but who has been certified by the Bureau of Apprenticeship and Training or a State Apprenticeship Agency (where appropriate) to be eligible for probationary employment as an apprentice. The allowable ratio of apprentices to journeymen on the job site in any craft classification shall not be greater than the ratio permitted to the Contractor as to the entire work force under the registered program. Any worker listed on a payroll at an apprentice wage rate, who is not registered or otherwise employed as stated in this paragraph, shall be paid not less than the applicable wage determination for the classification of work actually performed. In addition, any apprentice performing work on the job site in excess of the ratio permitted under the registered program shall be paid not less than the applicable wage rate on the wage determination for the work actually performed. Where a contractor is performing construction on a project in a locality other than that in which its program is registered, the ratios and wage rates (expressed in percentages of the journeyman's hourly rate) specified in the Contractor's or subcontractor's registered program shall be observed. Every apprentice

must be paid at not less than the rate specified in the registered program for the apprentice's level of progress, expressed as a percentage of the journeyman hourly rate specified in the applicable wage determination. Apprentices shall be paid fringe benefits in accordance with the provisions of the apprenticeship program. If the apprenticeship program does not specify fringe benefits, apprentices must be paid the full amount of fringe benefits listed on the wage determination for the applicable classification. If the Administrator determines that a different practice prevails for the applicable apprentice classification, fringes shall be paid in accordance with that determination. In the event the Bureau of Apprenticeship and Training, or a State Apprenticeship Agency recognized by the Bureau, withdraws approval of an apprenticeship program, the Contractor will no longer be permitted to utilize apprentices at less than the applicable predetermined rate for the work performed until an acceptable program is approved.

(b) Trainees. Except as provided in 29 CFR 5.16, trainees will not be permitted to work at less than the predetermined rate for the work performed unless they are employed pursuant to and individually registered in a program which has received prior approval, evidenced by formal certification by the U.S. Department of Labor, Employment and Training Administration. The ratio of trainees to journeymen on the job site shall not be greater than permitted under the plan approved by the Employment and Training Administration. Every trainee must be paid at not less than the rate specified in the approved program for the trainee's level of progress, expressed as a percentage of the journeyman hourly rate specified in the applicable wage determination. Trainees shall be paid fringe benefits in accordance with the provisions of the trainee program. If the trainee program does not mention fringe benefits, trainees shall be paid the full amount of fringe benefits listed in the wage determination unless the Administrator of the Wage and Hour Division determines that there is an apprenticeship program associated with the corresponding journeyman wage rate in the wage determination which provides for less than full fringe benefits for apprentices. Any employee listed on the payroll at a trainee rate who is not registered and participating in a training plan approved by the Employment and Training Administration shall be paid not less than the applicable wage rate in the wage determination for the classification of work actually performed. In addition, any trainee performing work on the job site in excess of the ratio permitted under the registered program shall be paid not less than the applicable wage rate in the wage determination for the work actually performed. In the event the Employment and Training Administration withdraws approval of a training program, the Contractor will no longer be permitted to utilize trainees at less than the applicable predetermined rate for the work performed until an acceptable program is approved.

(c) Equal employment opportunity. The utilization of apprentices, trainees, and journeymen under this clause shall be in conformity with the equal employment opportunity requirements of Executive Order 11246, as amended, and 29 CFR Part 30.

(End of clause)

28 52.222-10 COMPLIANCE WITH COPELAND ACT REQUIREMENTS (FEB 1988)

The Contractor shall comply with the requirements of 29 CFR Part 3, which are hereby incorporated by reference in this contract.

(End of clause)

29 52.222-11 SUBCONTRACTS (LABOR STANDARDS) (FEB 1988)

(a) The Contractor or subcontractor shall insert in any subcontracts the clauses entitled Davis-Bacon Act, Contract Work Hours and Safety Standards Act--Overtime Compensation, Apprentices and Trainees, Payrolls and Basic Records, Compliance with Copeland Act Requirements, Withholding of Funds, Subcontracts (Labor Standards), Contract Termination--Debarment, Disputes Concerning Labor Standards, Compliance with Davis-Bacon and Related Act Regulations, and Certification of Eligibility, and such other clauses as the Contracting Officer may, by appropriate instructions, require, and also a clause requiring subcontractors to include these clauses in any lower tier subcontracts. The Prime Contractor shall be responsible for compliance by any subcontractor or lower tier subcontractor with all the contract clauses cited in this paragraph.

(b)(1) Within 14 days after award of the contract, the Contractor shall deliver to the Contracting Officer a completed Statement and Acknowledgment Form (SF 1413) for each subcontract, including the subcontractor's signed and dated acknowledgment that the clauses set forth in paragraph (a) of this clause have been included in the subcontract.

(2) Within 14 days after the award of any subsequently awarded subcontract the Contractor shall deliver to the Contracting Officer an updated completed SF 1413 for such additional subcontract.

(End of clause)

30 52.222-12 CONTRACT TERMINATION--DEBARMENT (FEB 1988)

A breach of the contract clauses entitled Davis-Bacon Act, Contract Work Hours and Safety Standards Act--Overtime Compensation, Apprentices and Trainees, Payrolls and Basic Records, Compliance with Copeland Act Requirements, Subcontracts (Labor Standards), Compliance with Davis-Bacon and Related Act Regulations, or Certification of Eligibility may be grounds for termination of the contract, and for debarment as a Contractor and subcontractor as provided in 29 CFR 5.12.

(End of clause)

31 52.222-13 COMPLIANCE WITH DAVIS-BACON AND RELATED ACT REGULATIONS (FEB 1988)

All rulings and interpretations of the Davis-Bacon and Related Acts contained in 29 CFR Parts 1, 3, and 5 are hereby incorporated by reference in this contract.

(End of clause)

32 52.222-14 DISPUTES CONCERNING LABOR STANDARDS (FEB 1988)

The United States Department of Labor has set forth in 29 CFR Parts 5, 6, and 7 procedures for resolving disputes concerning labor standards requirements. Such disputes shall be resolved in accordance with those procedures and not the Disputes clause of this contract. Disputes within the meaning of this clause include disputes between the Contractor (or any of its subcontractors) and the contracting agency, the U.S. Department of Labor, or the employees of their representatives.

(End of clause)

33 52.222-15 CERTIFICATION OF ELIGIBILITY (FEB 1988)

(a) By entering into this contract, the Contractor certifies that neither it (nor he or she) nor any person or firm who has an interest in the Contractor's firm is a person or firm ineligible to be awarded Government contracts by virtue of section 3(a) of the Davis-Bacon Act or 29 CFR 5.12(a)(1).

(b) No part of this contract shall be subcontracted to any person or firm ineligible for award of a Government contract by virtue of section 3(a) of the Davis-Bacon Act or 29 CFR 5.12(a)(1).

(c) The penalty for making false statements is prescribed in the U.S. Criminal Code, 18 U.S.C. 1001.

(End of clause)

34 52.222-26 EQUAL OPPORTUNITY (APR 1984)

(a) If, during any 12-month period (including the 12 months preceding the award of this contract), the Contractor has been or is awarded nonexempt Federal contracts and/or subcontracts that have an aggregate value in excess of $10,000, the Contractor shall comply with subparagraphs (b)(1) through (11) below. Upon request, the Contractor shall provide information necessary to determine the applicability of this clause.

(b) During performing this contract, the Contractor agrees as follows:

(1) The Contractor shall not discriminate against any employee or applicant for employment because of race, color, religion, sex, or national origin.

(2) The Contractor shall take affirmative action to ensure that applicants are employed, and that employees are treated during employment, without regard to their race, color, religion, sex, or national origin. This shall include, but not be limited to, (i) employment, (ii) upgrading, (iii) demotion, (iv) transfer, (v) recruitment or recruitment advertising, (vi) layoff or termination, (vii) rates of pay or other forms of compensation, and (viii) selection for training, including apprenticeship.

(3) The Contractor shall post in conspicuous places available to employees and applicants for employment the notices to be provided by the Contracting Officer that explain this clause.

(4) The Contractor shall, in all solicitations or advertisements for employees placed by or on behalf of the Contractor, state that all

qualified applicants will receive consideration for employment without regard to race, color, religion, sex, or national origin.

(5) The Contractor shall send, to each labor union or representative of workers with which it has a collective bargaining agreement or other contract or understanding, the notice to be provided by the Contracting Officer advising the labor union or workers' representative of the Contractor's commitments under this clause, and post copies of the notice in conspicuous places available to employees and applicants for employment.

(6) The Contractor shall comply with Executive Order 11246, as amended, and the rules, regulations, and orders of the Secretary of Labor.

(7) The Contractor shall furnish to the contracting agency all information required by Executive Order 11246, as amended, and by the rules, regulations, and orders of the Secretary of Labor. Standard Form 100 (EEO-1), or any successor form, is the prescribed form to be filed within 30 days following the award, unless filed within 12 months preceding the date of award.

(8) The Contractor shall permit access to its books, records, and accounts by the contracting agency or the Office of Federal Contract Compliance Programs (OFCCP) for the purposes of investigation to ascertain the Contractor's compliance with the applicable rules, regulations, and orders.

(9) If the OFCCP determines that the Contractor is not in compliance with this clause or any rule, regulation, or order of the Secretary of Labor, this contract may be canceled, terminated, or suspended in whole or in part and the Contractor may be declared ineligible for further Government contracts, under the procedures authorized in Executive Order 11246, as amended. In addition, sanctions may be imposed and remedies invoked against the Contractor as provided in Executive Order 11246, as amended, the rules, regulations, and orders of the Secretary of Labor, or as otherwise provided by law.

(10) The Contractor shall include the terms and conditions of subparagraph (b)(1) through (11) of this clause in every subcontract or purchase order that is not exempted by the rules, regulations, or orders of the Secretary of Labor issued under Executive Order 11246, as amended, so that these terms and conditions will be binding upon each subcontractor or vendor.

(11) The Contractor shall take such action with respect to any subcontract or purchase order as the contracting agency may direct as a means of enforcing these terms and conditions, including sanctions for noncompliance; provided, that if the Contractor becomes involved in, or is threatened with, litigation with a subcontractor or vendor as a result of any direction, the Contractor may request the United States to enter into the litigation to protect the interests of the United States.

(c) Notwithstanding any other clause in this contract, disputes relative to this clause will be governed by the procedures in 41 CFR 60-1.1.

(End of clause)

(R 7-103.18 1978 SEP)

(R 1-12.803-2)

(R 7-607.13 1978 SEP)

35 52.222-27 AFFIRMATIVE ACTION COMPLIANCE REQUIREMENTS FOR CONSTRUCTION (APR 1984)

(a) Definitions.

"Covered area," as used in this clause, means the geographical area described in the solicitation for this contract.

"Director," as used in this clause, means Director, Office of Federal Contract Compliance Programs (OFCCP), United States Department of Labor, or any person to whom the Director delegates authority.

"Employer's identification number," as used in this clause, means the Federal Social Security number used on the employer's quarterly federal tax return, U.S. Treasury Department Form 941.

"Minority," as used in this clause, means--

(1) American Indian or Alaskan Native (all persons having origins in any of the original peoples of North America and maintaining identifiable tribal affiliations through membership and participation or community identification).

(2) Asian and Pacific Islander (all persons having origins in any of the original peoples of the Far East, Southeast Asia, the Indian Subcontinent, or the Pacific Islands);

(3) Black (all persons having origins in any of the black African racial groups not of Hispanic origin); and

(4) Hispanic (all persons of Mexican, Puerto Rican, Cuban, Central or South American, or other Spanish culture or origin, regardless of race).

(b) If the Contractor, or a subcontractor at any tier, subcontracts a portion of the work involving any construction trade, each such subcontract in excess of $10,000 shall include this clause and the Notice containing the goals for minority and female participation stated in the solicitation for this contract.

(c) If the Contractor is participating in a Hometown Plan (41 CFR 60-4) approved by the U.S. Department of Labor in a covered area, either individually or through an association, its affirmative action obligations on all work in the plan area (including goals) shall comply with the plan for those trades that have unions participating in the plan. Contractors must be able to demonstrate participation in, and compliance with, the provisions of the plan. Each Contractor or subcontractor participating in an approved plan is also required to comply with its obligations under the Equal Opportunity clause, and to make a good faith effort to achieve each goal under the plan in each trade in which it has employees. The overall good-faith performance by other Contractors or subcontractors toward a goal in an approved plan does not excuse any Contractor's or subcontractor's failure to make good-faith efforts to achieve the plan's goals.

(d) The Contractor shall implement the affirmative action procedures in subparagraphs (g)(1) through (16) of this clause. The goals stated in the solicitation for this contract are expressed as percentages of the total hours of employment and training of minority and female utilization that the Contractor should reasonably be able to achieve in each construction trade in which it has employees in the covered area. If the Contractor performs construction work in a geographical area located outside of the covered area, it shall apply the goals established for the geographical area where that work is actually performed. The Contractor is expected to

make substantially uniform progress toward its goals in each craft.

(e) Neither the terms and conditions of any collective bargaining agreement, nor the failure by a union with which the Contractor has a collective bargaining agreement, to refer minorities or women shall excuse the Contractor's obligations under this clause, Executive Order 11246, as amended, or the regulations thereunder.

(f) In order for the nonworking training hours of apprentices and trainees to be counted in meeting the goals, apprentices and trainees must be employed by the Contractor during the training period, and the Contractor must have made a commitment to employ the apprentices and trainees at the completion of their training, subject to the availability of employment opportunities. Trainees must be trained pursuant to training programs approved by the U.S. Department of Labor.

(g) The Contractor shall take affirmative action to ensure equal employment opportunity. The evaluation of the Contractor's compliance with this clause shall be based upon its effort to achieve maximum results from its actions. The Contractor shall document these efforts fully and implement affirmative action steps at least as extensive as the following:

(1) Ensure a working environment free of harassment, intimidation, and coercion at all sites and in all facilities where the Contractor's employees are assigned to work. The Contractor, if possible, will assign two or more women to each construction project. The Contractor shall ensure that foremen, superintendents, and other onsite supervisory personnel are aware of and carry out the Contractor's obligation to maintain such a working environment, with specific attention to minority or female individuals working at these sites or facilities.

(2) Establish and maintain a current list of sources for minority and female recruitment. Provide written notification to minority and female recruitment sources and community organizations when the Contractor or its unions have employment opportunities available, and maintain a record of the organizations' responses.

(3) Establish and maintain a current file of the names, addresses, and telephone numbers of each minority and female off-the-street applicant, referrals of minorities or females from unions, recruitment sources, or community organizations, and the action taken with respect to each individual. If an individual was sent to the union hiring hall for referral and not referred back to the Contractor by the union or, if referred back, not employed by the Contractor, this shall be documented in the file, along with whatever additional actions the Contractor may have taken.

(4) Immediately notify the Director when the union or unions with which the Contractor has a collective bargaining agreement has not referred back to the Contractor a minority or woman sent by the Contractor, or when the Contractor has other information that the union referral process has impeded the Contractor's efforts to meet its obligations.

(5) Develop on-the-job training opportunities and/or participate in training programs for the area that expressly include minorities and women, including upgrading programs and apprenticeship and trainee programs relevant to the Contractor's employment needs, especially those programs funded or approved by the Department of Labor. The Contractor shall provide notice of these programs to the sources compiled under

subparagraph (g)(2) above.

(6) Disseminate the Contractor's equal employment policy by--

(i) Providing notice of the policy to unions and to training, recruitment, and outreach programs, and requesting their cooperation in assisting the Contractor in meeting its contract obligations;

(ii) Including the policy in any policy manual and in collective bargaining agreements;

(iii) Publicizing the policy in the company newspaper, annual report, etc.;

(iv) Reviewing the policy with all management personnel and with all minority and female employees at least once a year; and

(v) Posting the policy on bulletin boards accessible to employees at each location where construction work is performed.

(7) Review, at least annually, the Contractor's equal employment policy and affirmative action obligations with all employees having responsibility for hiring, assignment, layoff, termination, or other employment decisions. Conduct review of this policy with all onsite supervisory personnel before initiating construction work at a job site. A written record shall be made and maintained identifying the time and place of these meetings, persons attending, subject matter discussed, and disposition of the subject matter.

(8) Disseminate the Contractor's equal employment policy externally by including it in any advertising in the news media, specifically including minority and female news media. Provide written notification to, and discuss this policy with, other Contractors and subcontractors with which the Contractor does or anticipates doing business.

(9) Direct recruitment efforts, both oral and written, to minority, female, and community organizations, to schools with minority and female students, and to minority and female recruitment and training organizations serving the Contractor's recruitment area and employment needs. Not later than 1 month before the date for acceptance of applications for apprenticeship or training by any recruitment source, send written notification to organizations such as the above, describing the openings, screening procedures, and tests to be used in the selection process.

(10) Encourage present minority and female employees to recruit minority persons and women. Where reasonable, provide after-school, summer, and vacation employment to minority and female youth both on the site and in other areas of the Contractor's workforce.

(11) Validate all tests and other selection requirements where required under 41 CFR 60-3.

(12) Conduct, at least annually, an inventory and evaluation at least of all minority and female personnel for promotional opportunities. Encourage these employees to seek or to prepare for, through appropriate training, etc., opportunities for promotion.

(13) Ensure that seniority practices job classifications, work assignments, and other personnel practices do not have a discriminatory effect by continually monitoring all personnel and employment-related activities to ensure that the Contractor's obligations under this contract are being carried out.

(14) Ensure that all facilities and company activities are nonsegrated except that separate or single-user toilet and necessary changing

facilities shall be provided to assure privacy between the sexes.

(15) Maintain a record of solicitations for subcontracts for minority and female construction contractors and suppliers, including circulation of solicitations to minority and female contractor associations and other business associations.

(16) Conduct a review, at least annually, of all supervisors' adherence to and performance under the Contractor's equal employment policy and affirmative action obligations.

(h) The Contractor is encouraged to participate in voluntary associations that may assist in fulfilling one or more of the affirmative action obligations contained in subparagraphs (g)(1) through (16). The efforts of a contractor association, joint contractor-union, contractor-community, or similar group of which the contractor is a member and participant may be asserted as fulfilling one or more of its obligations under subparagraphs (g)(1) through (16), provided the Contractor--

(1) Actively participates in the group;

(2) Makes every effort to ensure that the group has a positive impact on the employment of minorities and women in the industry;

(3) Ensures that concrete benefits of the program are reflected in the Contractor's minority and female workforce participation;

(4) Makes a good-faith effort to meet its individual goals and timetables; and

(5) Can provide access to documentation that demonstrates the effectiveness of actions taken on behalf of the Contractor. The obligation to comply is the Contractor's, and failure of such a group to fulfill an obligation shall not be a defense for the Contractor's noncompliance.

(i) A single goal for minorities and a separate single goal for women shall be established. The Contractor is required to provide equal employment opportunity and to take affirmative action for all minority groups, both male and female, and all women, both minority and nonminority. Consequently, the Contractor may be in violation of Executive Order 11246, as amended, if a particular group is employed in a substantially disparate manner.

(j) The Contractor shall not use goals or affirmative action standards to discriminate against any person because of race, color, religion, sex, or national origin.

(k) The Contractor shall not enter into any subcontract with any person or firm debarred from Government contracts under Executive Order 11246, as amended.

(l) The Contractor shall carry out such sanctions and penalties for violation of this clause and of the Equal Opportunity clause, including suspension, termination, and cancellation of existing subcontracts, as may be imposed or ordered under Executive Order 11246, as amended, and its implementing regulations, by the OFCCP. Any failure to carry out these sanctions and penalties as ordered shall be a violation of this clause and Executive Order 11246, as amended.

(m) The Contractor in fulfilling its obligations under this clause shall implement affirmative action procedures at least as extensive as those prescribed in paragraph (g) above, so as to achieve maximum results from its efforts to ensure equal employment opportunity. If the Contractor

fails to comply with the requirements of Executive Order 11246, as amended, the implementing regulations, or this clause, the Director shall take action as prescribed in 41 CFR 60-4.8.

(n) The Contractor shall designate a responsible official to--

(1) Monitor all employment-related activity to ensure that the Contractor's equal employment policy is being carried out;

(2) Submit reports as may be required by the Government; and

(3) Keep records that shall at least include for each employee the name, address, telephone number, construction trade, union affiliation (if any), employee identification number, social security number, race, sex, status (e.g., mechanic, apprentice, trainee, helper, or laborer), dates of changes in status, hours worked per week in the indicated trade, rate of pay, and locations at which the work was performed. Records shall be maintained in an easily understandable and retrievable form; however, to the degree that existing records satisfy this requirement, separate records are not required to be maintained.

(o) Nothing contained herein shall be construed as a limitation upon the application of other laws that establish different standards of compliance or upon the requirements for the hiring of local or other area residents (e.g., those under the Public Works Employment Act of 1977 and the Community Development Block Grant Program).

(End of clause)

(R 7-603.60 1978 SEP)

36 52.222-35 AFFIRMATIVE ACTION FOR SPECIAL DISABLED AND VIETNAM ERA VETERANS (APR 1984)

(a) Definitions.

"Appropriate office of the State employment service system," as used in this clause, means the local office of the Federal-State national system of public employment offices assigned to serve the area where the employment opening is to be filled, including the District of Columbia, Guam, Puerto Rico, Virgin Islands, American Samoa, and the Trust Territory of the Pacific Islands.

"Openings that the Contractor proposes to fill from within its own organization," as used in this clause, means employment openings for which no one outside the Contractor's organization (including any affiliates, subsidiaries, and the parent companies) will be considered and includes any openings that the Contractor proposes to fill from regularly established "recall" lists.

"Openings that the Contractor proposes to fill under a customary and traditional employer-union hiring arrangement," as used in this clause, means employment openings that the Contractor proposes to fill from union halls, under their customary and traditional employer-union hiring relationship.

"Suitable employment openings," as used in this clause--

(1) Includes, but is not limited to, openings that occur in jobs categorized as--

(i) Production and nonproduction;

(ii) Plant and office;

(iii) Laborers and mechanics;

(iv) Supervisory and nonsupervisory;

(v) Technical; and

(vi) Executive, administrative, and professional positions compensated on a salary basis of less than $25,000 a year; and

(2) Includes full-time employment, temporary employment of over 3 days, and part-time employment, but not openings that the Contractor proposes to fill from within its own organization or under a customary and traditional employer-union hiring arrangement, nor openings in an educational institution that are restricted to students of that institution.

(b) General. (1) Regarding any position for which the employee or applicant for employment is qualified, the Contractor shall not discriminate against the individual because the individual is a special disabled or Vietnam Era veteran. The Contractor agrees to take affirmative action to employ, advance in employment, and otherwise treat qualified special disabled and Vietnam Era veterans without discrimination based upon their disability or veterans' status in all employment practices such as--

(i) Employment;

(ii) Upgrading;

(iii) Demotion or transfer;

(iv) Recruitment;

(v) Advertising;

(vi) Layoff or termination;

(vii) Rates of pay or other forms of compensation; and

(viii) Selection for training, including apprenticeship.

(2) The Contractor agrees to comply with the rules, regulations, and relevant orders of the Secretary of Labor (Secretary) issued under the Vietnam Era Veterans' Readjustment Assistance Act of 1972 (the Act), as amended.

(c) Listing openings. (1) The Contractor agrees to list all suitable employment openings existing at contract award or occurring during contract performance, at an appropriate office of the State employment service system in the locality where the opening occurs. These openings include those occurring at any Contractor facility, including one not connected with performing this contract. An independent corporate affiliate is exempt from this requirement.

(2) State and local government agencies holding Federal contracts of $10,000 or more shall also list all their suitable openings with the appropriate office of the State employment service.

(3) The listing of suitable employment openings with the State employment service system is required at least concurrently with using any other recruitment source or effort and involves the obligations of placing a bona fide job order, including accepting referrals of veterans and nonveterans. This listing does not require hiring any particular job applicant or hiring from any particular group of job applicants and is not intended to relieve the Contractor from any requirements of Executive orders or regulations concerning nondiscrimination in employment.

(4) Whenever the Contractor becomes contractually bound to the listing terms of this clause, it shall advise the State employment service system, in each State where it has establishments, of the name and location of each hiring location in the State. As long as the

Contractor is contractually bound to these terms and has so advised the State system, it need not advise the State system of subsequent contracts. The Contractor may advise the State system when it is no longer bound by this contract clause.

(5) Under the most compelling circumstances, an employment opening may not be suitable for listing, including situations when (i) the Government's needs cannot reasonably be supplied, (ii) listing would be contrary to national security, or (iii) the requirement of listing would not be in the Government's interest.

(d) Applicability. (1) This clause does not apply to the listing of employment openings which occur and are filled outside the 50 States, the District of Columbia, Puerto Rico, Guam, Virgin Islands, American Samoa, and the Trust Territory of the Pacific Islands.

(2) The terms of paragraph (c) above of this clause do not apply to openings that the Contractor proposes to fill from within its own organization or under a customary and traditional employer-union hiring arrangement. This exclusion does not apply to a particular opening once an employer decides to consider applicants outside of its own organization or employer-union arrangement for that opening.

(e) Postings. (1) The Contractor agrees to post employment notices stating (i) the Contractor's obligation under the law to take affirmative action to employ and advance in employment qualified special disabled veterans and veterans of the Vietnam era, and (ii) the rights of applicants and employees.

(2) These notices shall be posted in conspicuous places that are available to employees and applicants for employment. They shall be in a form prescribed by the Director, Office of Federal Contract Compliance Programs, Department of Labor (Director), and provided by or through the Contracting Officer.

(3) The Contractor shall notify each labor union or representative of workers with which it has a collective bargaining agreement or other contract understanding, that the Contractor is bound by the terms of the Act, and is committed to take affirmative action to employ, and advance in employment, qualified special disabled and Vietnam Era veterans.

(f) Noncompliance. If the Contractor does not comply with the requirements of this clause, appropriate actions may be taken under the rules, regulations, and relevant orders of the Secretary issued pursuant to the Act.

(g) Subcontracts. The Contractor shall include the terms of this clause in every subcontract or purchase order of $10,000 or more unless exempted by rules, regulations, or orders of the Secretary. The Contractor shall act as specified by the Director to enforce the terms, including action for noncompliance.

(End of clause)
(R 7-103.27 1976 JUL)
(R FPR Temp. Reg. 39)

37 52.222-36 AFFIRMATIVE ACTION FOR HANDICAPPED WORKERS (APR 1984)

(a) General. (1) Regarding any position for which the employee or applicant for employment is qualified, the Contractor shall not

discriminate against any employee or applicant because of physical or mental handicap. The Contractor agrees to take affirmative action to employ, advance in employment, and otherwise treat qualified handicapped individuals without discrimination based upon their physical or mental handicap in all employment practices such as--

(i) Employment;
(ii) Upgrading;
(iii) Demotion or transfer;
(iv) Recruitment;
(v) Advertising;
(vi) Layoff or termination;
(vii) Rates of pay or other forms of compensation; and
(viii) Selection for training, including apprenticeship.

(2) The Contractor agrees to comply with the rules, regulations, and relevant orders of the Secretary of Labor (Secretary) issued under the Rehabilitation Act of 1973 (29 U.S.C. 793) (the Act), as amended.

(b) Postings. (1) The Contractor agrees to post employment notices stating (i) the Contractor's obligation under the law to take affirmative action to employ and advance in employment qualified handicapped individuals and (ii) the rights of applicants and employees.

(2) These notices shall be posted in conspicuous places that are available to employees and applicants for employment. They shall be in a form prescribed by the Director, Office of Federal Contract Compliance Programs, Department of Labor (Director), and provided by or through the Contracting Officer.

(3) The Contractor shall notify each labor union or representative of workers with which it has a collective bargaining agreement or other contract understanding, that the Contractor is bound by the terms of Section 503 of the Act and is committed to take affirmative action to employ, and advance in employment, qualified physically and mentally handicapped individuals.

(c) Noncompliance. If the Contractor does not comply with the requirements of this clause, appropriate actions may be taken under the rules, regulations, and relevant orders of the Secretary issued pursuant to the Act.

(d) Subcontracts. The Contractor shall include the terms of this clause in every subcontract or purchase order in excess of $2,500 unless exempted by rules, regulations, or orders of the Secretary. The Contractor shall act as specified by the Director to enforce the terms, including action for noncompliance.

(End of clause)
(R 7-103.28 1976 MAY)
(R FPR Temp. Reg. 38)

38 52.222-37 EMPLOYMENT REPORTS ON SPECIAL DISABLED VETERANS AND VETERANS OF THE VIETNAM ERA (JAN 1988)

(a) The contractor shall report at least annually, as required by the Secretary of Labor, on:

(1) The number of special disabled veterans and the number of veterans of the Vietnam era in the workforce of the contractor by job category

and hiring location; and

(2) The total number of new employees hired during the period covered by the report, and of that total, the number of special disabled veterans, and the number of veterans of the Vietnam era.

(b) The above items shall be reported by completing the form entitled "Federal Contractor Veterans' Employment Report VETS-100."

(c) Reports shall be submitted no later than March 31 of each year beginning March 31, 1988.

(d) The employment activity report required by paragraph (a)(2) of this clause shall reflect total hires during the most recent 12-month period as of the ending date selected for the employment profile report required by paragraph (a)(1) of this clause. Contractors may select an ending date: (1) As of the end of any pay period during the period January through March 1st of the year the report is due, or (2) as of December 31, if the contractor has previous written approval from the Equal Employment Opportunity Commission to do so for purposes of submitting the Employer Information Report EEO-1 (Standard Form 100).

(e) The count of veterans reported according to paragraph (a) of this clause shall be based on voluntary disclosure. Each contractor subject to the reporting requirements at 38 U.S.C. 2012(d) shall invite all special disabled veterans and veterans of the Vietnam era who wish to benefit under the affirmative action program at 38 U.S.C. 2012 to identify themselves to the contractor. The invitation shall state that the information is voluntarily provided, that the information will be kept confidential, that disclosure or refusal to provide the information will not subject the applicant or employee to any adverse treatment and that the information will be used only in accordance with the regulations promulgated under 38 U.S.C. 2012.

(f) Subcontracts. The Contractor shall include the terms of this clause in every subcontract or purchase order of $10,000 or more unless exempted by rules, regulations, or orders of the Secretary.

(End of clause)

39 52.223-2 CLEAN AIR AND WATER (APR 1984)

(a) "Air Act", as used in this clause, means the Clean Air Act (42 U.S.C. 7401, et seq.).

"Clean air standards," as used in this clause, means--

(1) Any enforceable rules, regulations, guidelines, standards, limitations, orders, controls, prohibitions, work practices, or other requirements contained in, issued under, or otherwise adopted under the Air Act or Executive Order 11738;

(2) An applicable implementation plan as described in section 110(d) of the Air Act (42 U.S.C. 7410(d));

(3) An approved implementation procedure or plan under section 111(c) or section 111(d) of the Air Act (42 U.S.C. 7411(c) or (d)); or

(4) An approved implementation procedure under section 112(d) of the Air Act (42 U.S.C. 7412(d)).

"Clean water standards," as used in this clause, means any enforceable limitation, control, condition, prohibition, standard, or other requirement promulgated under the Water Act or contained in a permit issued to a

discharger by the EPA or by a State under an approved program, as authorized by section 402 of the Water Act (33 U.S.C. 1342), or by local government to ensure compliance with pretreatment regulations as required by section 307 of the Water Act (33 U.S.C. 1317).

"Compliance," as used in this clause, means compliance with--

(1) Clean air or water standards; or

(2) A schedule or plan ordered or approved by a court of competent jurisdiction, the EPA, or an air or water pollution control agency under the requirements of the Air Act or Water Act and related regulations.

"Facility," as used in this clause, means any building, plant, installation, structure, mine, vessel or other floating craft, location, or site of operations, owned, leased, or supervised by a Contractor or subcontractor, used in the performance of a contract or subcontract. When a location or site of operations includes more than one building, plant, installation, or structure, the entire location or site shall be deemed a facility except when the Administrator, or a designee, of the EPA determines that independent facilities are collocated in one geographical area.

"Water Act," as used in this clause, means Clean Water Act (33 U.S.C. 1251, et seq.).

(b) The Contractor agrees--

(1) To comply with all the requirements of section 114 of the Clean Air Act (42 U.S.C. 7414) and section 308 of the Clean Water Act (33 U.S.C. 1318) relating to inspection, monitoring, entry, reports, and information, as well as other requirements specified in section 114 and section 308 of the Air Act and the Water Act, and all regulations and guidelines issued to implement those acts before the award of this contract;

(2) That no portion of the work required by this prime contract will be performed in a facility listed on the EPA List of Violating Facilities on the date when this contract was awarded unless and until the EPA eliminates the name of the facility from the listing;

(3) To use best efforts to comply with clean air standards and clean water standards at the facility in which the contract is being performed; and

(4) To insert the substance of this clause into any nonexempt subcontract, including this subparagraph (b)(4).

(End of clause)

(R 7-103.29 1975 OCT)

(R 1-1.2302)

40 52.223-5 POLLUTION PREVENTION AND RIGHT-TO-KNOW INFORMATION (MAR 1997)

(a) Executive Order 12856 of August 3, 1993, requires Federal facilities to comply with the provisions of the Emergency Planning and Community Right-to-Know Act of 1986 (EPCRA) (42 U.S.C. 11001-11050) and the Pollution Prevention Act of 1990 (PPA) (42 U.S.C. 13101-13109).

(b) The Contractor shall provide all information needed by the Federal facility to comply with the emergency planning reporting requirements of Section 302 of EPCRA, the emergency notice requirements of Section 304 of EPCRA, the list of Material Data Safety Sheets required by Section 311 of

EPCRA, the emergency and hazardous chemical inventory forms of Section 312 of EPCRA, and the toxic chemical release inventory of Section 313 of EPCRA, which includes the reduction and recycling information required by Section 6607 of PPA.

(End of clause)

41 52.223-6 DRUG-FREE WORKPLACE (JAN 1997)

(a) Definitions. As used in this clause--

"Controlled substance" means a controlled substance in schedules I through V of section 202 of the Controlled Substances Act (21 U.S.C. 812) and as further defined in regulation at 21 CFR 1308.11 - 1308.15.

"Conviction" means a finding of guilt (including a plea of nolo contendere) or imposition of sentence, or both, by any judicial body charged with the responsibility to determine violations of the Federal or State criminal drug statutes.

"Criminal drug statute" means a Federal or non-Federal criminal statute involving the manufacture, distribution, dispensing, possession or use of any controlled substance.

"Drug-free workplace" means the site(s) for the performance of work done by the Contractor in connection with a specific contract at which employees of the Contractor are prohibited from engaging in the unlawful manufacture, distribution, dispensing, possession, or use of a controlled substance.

"Employee" means an employee of a Contractor directly engaged in the performance of work under a Government contract. "Directly engaged" is defined to include all direct cost employees and any other Contractor employee who has other than a minimal impact or involvement in contract performance.

"Individual" means an offeror/contractor that has no more than one employee including the offeror/contractor.

(b) The Contractor, if other than an individual, shall--within 30 days after award (unless a longer period is agreed to in writing for contracts of 30 days or more performance duration), or as soon as possible for contracts of less than 30 days performance duration--

(1) Publish a statement notifying its employees that the unlawful manufacture, distribution, dispensing, possession, or use of a controlled substance is prohibited in the Contractor's workplace and specifying the actions that will be taken against employees for violations of such prohibition;

(2) Establish an ongoing drug-free awareness program to inform such employees about--

(i) The dangers of drug abuse in the workplace;

(ii) The Contractor's policy of maintaining a drug-free workplace;

(iii) Any available drug counseling, rehabilitation, and employee assistance programs; and

(iv) The penalties that may be imposed upon employees for drug abuse violations occurring in the workplace;

(3) Provide all employees engaged in performance of the contract with a copy of the statement required by subparagraph (b)(1) of this clause;

(4) Notify such employees in writing in the statement required by subparagraph (b)(1) of this clause that, as a condition of continued

employment on this contract, the employee will--

(i) Abide by the terms of the statement; and

(ii) Notify the employer in writing of the employee's conviction under a criminal drug statute for a violation occurring in the workplace no later than 5 days after such conviction.

(5) Notify the Contracting Officer in writing within 10 days after receiving notice under subdivision (b)(4)(ii) of this clause, from an employee or otherwise receiving actual notice of such conviction. The notice shall include the position title of the employee;

(6) Within 30 days after receiving notice under subdivision (b)(4)(ii) of this clause of a conviction, take one of the following actions with respect to any employee who is convicted of a drug abuse violation occurring in the workplace:

(i) Taking appropriate personnel action against such employee, up to and including termination; or

(ii) Require such employee to satisfactorily participate in a drug abuse assistance or rehabilitation program approved for such purposes by a Federal, State, or local health, law enforcement, or other appropriate agency, and

(7) Make a good faith effort to maintain a drug-free workplace through implementation of subparagraphs (b)(1) through (b)(6) of this clause.

(c) The Contractor, if an individual, agrees by award of the contract or acceptance of a purchase order, not to engage in the unlawful manufacture, distribution, dispensing, possession, or use of a controlled substance while performing this contract.

(d) In addition to other remedies available to the Government, the Contractor's failure to comply with the requirements of paragraph (b) or (c) of this clause may, pursuant to FAR 23.506, render the Contractor subject to suspension of contract payments, termination of the contract for default, and suspension or debarment.

(End of clause)

42 52.223-14 TOXIC CHEMICAL RELEASE REPORTING (OCT 1996)

(a) Unless otherwise exempt, the Contractor, as owner or operator of a facility used in the performance of this contract, shall file by July 1 for the prior calendar year an annual Toxic Chemical Release Inventory Form (Form R) as described in sections 313(a) and (g) of the Emergency Planning and Community Right-to-Know Act of 1986 (EPCRA) (42 U.S.C. 11023(a) and (g)), and section 6607 of the Pollution Prevention Act of 1990 (PPA) (42 U.S.C. 13106). The Contractor shall file, for each facility subject to the Form R filing and reporting requirements, the annual Form R throughout the life of the contract.

(b) A Contractor owned or operated facility used in the performance of this contract is exempt from the requirement to file an annual Form R if--

(1) The facility does not manufacture, process, or otherwise use any toxic chemicals listed under section 313(c) of EPCRA, 42 U.S.C. 11023(c);

(2) The facility does not have 10 or more full-time employees as specified in section 313(b)(1)(A) of EPCRA, 42 U.S.C. 11023(b)(1)(A);

(3) The facility does not meet the reporting thresholds of toxic

chemicals established under section 313(f) of EPCRA, 42 U.S.C. 11023(f) (including the alternate thresholds at 40 CFR 372.27, provided an appropriate certification form has been filed with EPA);

(4) The facility does not fall within Standard Industrial Classification Code (SIC) designations 20 through 39 as set forth in Section 19.102 of the Federal Acquisition Regulation (FAR); or

(5) The facility is not located within any State of the United States, the District of Columbia, the Commonwealth of Puerto Rico, Guam, American Samoa, the United States Virgin Islands, the Northern Mariana Islands, or any other territory or possession over which the United States has jurisdiction.

(c) If the Contractor has certified to an exemption in accordance with one or more of the criteria in paragraph (b) of this clause, and after award of the contract circumstances change so that any of its owned or operated facilities used in the performance of this contract is no longer exempt--

(1) The Contractor shall notify the Contracting Officer; and

(2) The Contractor, as owner or operator of a facility used in the performance of this contract that is no longer exempt, shall (i) submit a Toxic Chemical Release Inventory Form (Form R) on or before July 1 for the prior calendar year during which the facility becomes eligible; and (ii) continue to file the annual Form R for the life of the contract for such facility.

(d) The Contracting Officer may terminate this contract or take other action as appropriate, if the Contractor fails to comply accurately and fully with the EPCRA and PPA toxic chemical release filing and reporting requirements.

(e) Except for acquisitions of commercial items as defined in FAR Part 2, the Contractor shall--

(1) For competitive subcontracts expected to exceed $100,000 (including all options), include a solicitation provision substantially the same as the provision at FAR 52.223-13, Certification of Toxic Chemical Release Reporting; and

(2) Include in any resultant subcontract exceeding $100,000 (including all options), the substance of this clause, except this paragraph (e).

(End of clause)

43 52.225-5 BUY AMERICAN ACT--CONSTRUCTION MATERIALS (JUN 1997)

(a) The Buy American Act (41 U.S.C. 10) provides that the Government give preference to domestic construction material.

"Components," means those articles, materials, and supplies incorporated directly into construction materials.

"Construction materials," means an article, material, or supply brought to the construction site for incorporation into the building or work. Construction material also includes an item brought to the site pre-assembled from articles, materials or supplies. However, emergency life safety systems, such as emergency lighting, fire alarm, and audio evacuation systems, which are discrete systems incorporated into a public building or work and which are produced as a complete system, shall be evaluated as a single and distinct construction material regardless of when

or how the individual parts or components of such systems are delivered to the construction site.

"Domestic construction material," means (1) an unmanufactured construction material mined or produced in the United States, or (2) a construction material manufactured in the United States, if the cost of its components mined, produced, or manufactured in the United States exceeds 50 percent of the cost of all its components. Components of foreign origin of the same class or kind as the construction materials determined to be unavailable pursuant to subparagraph 25.202(a)(2) of the Federal Acquisition Regulation (FAR) shall be treated as domestic.

(b)(1) The Buy American Act (41 U.S.C. 10a-10d) requires that only domestic construction material be used in performing this contract, except as provided in paragraphs (b)(2) and (b)(3) of this clause.

(2) This requirement does not apply to the excepted construction material or components listed by the Government as follows:

%%Insert list of applicable accepted materials or indicate "none"

_____

(3) Other foreign construction material may be added to the list in paragraph (b)(2) of this clause if the Government determines that--

(i) The cost would be unreasonable (the cost of a particular domestic construction material shall be determined to be unreasonable when the cost of such material exceeds the cost of foreign material by more than 6 percent, unless the agency head determines a higher percentage to be appropriate);

(ii) The application of the restriction of the Buy American Act to a particular construction material would be impracticable or inconsistent with the public interest; or

(iii) The construction material is not mined, produced, or manufactured in the United States in sufficient and reasonably available commercial quantities of a satisfactory quality.

(4) The Contractor agrees that only domestic construction material will be used by the Contractor, subcontractors, material men, and suppliers in the performance of this contract, except for foreign construction materials, if any, listed in paragraph (b)(2) of this clause.

(c) Request for determination. (1) Contractors requesting to use foreign construction material under paragraph (b)(3) of this clause shall provide adequate information for Government evaluation of the request for a determination regarding the inapplicability of the Buy American Act. Each submission shall include a description of the foreign and domestic construction materials, including unit of measure, quantity, price, time of delivery or availability, location of the construction project, name and address of the proposed contractor, and a detailed justification of the reason for use of foreign materials cited in accordance with paragraph (b)(3) of this clause. A submission based on unreasonable cost shall include a reasonable survey of the market and a completed price comparison table in the format in paragraph (d) of this clause. The price of construction material shall include all delivery costs to the construction site and any applicable duty (whether or not a duty-free certificate may be issued).

(2) If the Government determines after contract award that an exception to the Buy American Act applies, the contract shall be modified to allow use of the foreign construction material, and adequate consideration

shall be negotiated. However, when the basis for the exception is the unreasonable price of a domestic construction material, adequate consideration shall not be less than the differential established in paragraph (b)(3)(i) of this clause.

(3) If the Government does not determine that an exception to the Buy American Act applies, the use of that particular foreign construction material will be a failure to comply with the Act.

(d) For evaluation of requests under paragraph (c) of this clause based on unreasonable cost, the following information and any applicable supporting data based on the survey of suppliers shall be included in the request:

Foreign and Domestic Construction Materials Price Comparison

Construction material description	Unit of measure	Quantity	Price (dollars) +
Item 1:			
Foreign construction material.....	.....	.....	.....
Domestic construction material.....	.....	.....	.....
Item 2:			
Foreign construction material.....	.....	.....	.....
Domestic construction material.....	.....	.....	.....

List name, address, telephone number, and contact for suppliers surveyed. Attach copy of response; if oral, attach summary. Include other applicable supporting information.

+ Include all delivery costs to the construction site and any applicable duty (whether or not a duty-free entry certificate is issued).

(End of clause)

44 52.225-11 RESTRICTIONS ON CERTAIN FOREIGN PURCHASES (OCT 1996)

(a) Unless advance written approval of the Contracting Officer is obtained, the Contractor shall not acquire, for use in the performance of this contract, any supplies or services originating from sources within, or that were located in or transported from or through, countries whose products are banned from importation into the United States under regulations of the Office of Foreign Assets Control, Department of the Treasury. Those countries include Cuba, Iran, Iraq, Libya, and North Korea.

(b) The Contractor shall not acquire for use in the performance of this contract any supplies or services from entities controlled by the Government of Iraq.

(c) The Contractor agrees to insert the provisions of this clause, including this paragraph (c), in all subcontracts hereunder.

(End of clause)

45 52.226-1 UTILIZATION OF INDIAN ORGANIZATIONS AND INDIAN-OWNED ECONOMIC ENTERPRISES (SEP 1996)

(a) For Department of Defense contracts, this clause applies only if the contract includes a subcontracting plan incorporated under the terms of the clause at 52.219-9, Small, Small Disadvantaged and Women-Owned Small Business Subcontracting Plan. It does not apply to contracts awarded based on a subcontracting plan submitted and approved under paragraph (g) of the clause at 52.219

(b) Definitions. As used in this clause:

"Indian" means any person who is a member of any Indian tribe, band, group, pueblo or community which is recognized by the Federal Government as eligible for services from the Bureau of Indian Affairs (BIA) in accordance with 25 U.S.C. 1452(c) and any "Native" as defined in the Alaska Native Claims Settlement Act (43 U.S.C. 1601).

"Indian organization" means the governing body of any Indian tribe or entity established or recognized by the governing body of an Indian tribe for the purposes of 25 U.S.C., Chapter 17.

"Indian-owned economic enterprise" means any Indian-owned (as determined by the Secretary of the Interior) commercial, industrial, or business activity established or organized for the purpose of profit, provided that Indian ownership shall constitute not less than 51 percent of the enterprise.

"Indian tribe" means any Indian tribe, band, group, pueblo or community, including native villages and native groups (including corporations organized by Kenai, Juneau, Sitka, and Kodiak) as defined in the Alaska Native Claims Settlement Act, which is recognized by the Federal Government as eligible for services from BIA in accordance with 25 U.S.C. 1542(c).

"Interested party" means a prime contractor or an actual or prospective offeror whose direct economic interest would be affected by the award of a subcontract or by the failure to award a subcontract.

(c) The Contractor agrees to use its best efforts to give Indian organizations and Indian-owned economic enterprises (25 U.S.C. 1544) the maximum practicable opportunity to participate in the subcontracts it awards to the fullest extent consistent with efficient performance of its contract.

(1) The Contracting Officer and the Contractor, acting in good faith, may rely on the self-certification of an Indian organization or Indian-owned economic enterprise as to its eligibility, unless an interested party challenges its status or the Contracting Officer has independent reason to question that status. In the event of a challenge to the self-certification of a subcontractor, the Contracting Officer shall refer the matter to the U.S. Department of the Interior, Bureau of Indian Affairs (BIA), Attn: Chief, Division of Contracting and Grants Administration, 1849 C Street, NW, MS-334A-SIB, Washington, DC 20245. The BIA will determine the eligibility and notify the Contracting Officer. The 5 percent incentive payment will not be made within 50 working days of subcontract award or while a challenge is pending. If a subcontractor is determined to be an ineligible participant, no incentive payment will be made under the Indian Incentive Program.

(2) The Contractor may request an adjustment under the Indian Incentive Program to the following:

(i) The estimated cost of a cost-type contract.

(ii) The target cost of a cost-plus-incentive-fee prime contract.

(iii) The target cost and ceiling price of a fixed-price incentive prime contract.

(iv) The price of a firm-fixed-price prime contract.

(3) The amount of the equitable adjustment to the prime contract shall be 5 percent of the estimated cost, target cost or firm-fixed-price included in the subcontract initially awarded to the Indian organization or Indian-owned economic enterprise.

(4) The Contractor has the burden of proving the amount claimed and must assert its request for an adjustment prior to completion of contract performance.

(d) The Contracting Officer, subject to the terms and conditions of the contract and the availability of funds, shall authorize an incentive payment of 5 percent of the amount paid to the subcontractor. Contracting Officers shall seek funding in accordance with agency procedures. The Contracting Officer's decision is final and not subject to the Disputes clause of this contract.

(End of clause)

46 52.227-1 AUTHORIZATION AND CONSENT (JUL 1995)

(a) The Government authorizes and consents to all use and manufacture, in performing this contract or any subcontract at any tier, of any invention described in and covered by a United States patent (1) embodied in the structure or composition of any article the delivery of which is accepted by the Government under this contract or (2) used in machinery, tools, or methods whose use necessarily results from compliance by the Contractor or a subcontractor with (i) specifications or written provisions forming a part of this contract or (ii) specific written instructions given by the Contracting Officer directing the manner of performance. The entire liability to the Government for infringement of a patent of the United States shall be determined solely by the provisions of the indemnity clause, if any, included in this contract or any subcontract hereunder (including any lower-tier subcontract), and the Government assumes liability for all other infringement to the extent of the authorization and consent hereinabove granted.

(b) The Contractor agrees to include, and require inclusion of, this clause, suitably modified to identify the parties, in all subcontracts at any tier for supplies or services (including construction, architect-engineer services, and materials, supplies, models, samples, and design or testing services expected to exceed the simplified acquisition threshold); however, omission of this clause from any subcontract, including those at or below the simplified acquisition threshold, does not affect this authorization and consent.

(End of clause)

47 52.227-2 NOTICE AND ASSISTANCE REGARDING PATENT AND COPYRIGHT INFRINGEMENT (AUG 1996)

(a) The Contractor shall report to the Contracting Officer, promptly and in reasonable written detail, each notice or claim of patent or copyright infringement based on the performance of this contract of which the Contractor has knowledge.

(b) In the event of any claim or suit against the Government on account of any alleged patent or copyright infringement arising out of the performance of this contract or out of the use of any supplies furnished or work or services performed under this contract, the Contractor shall furnish to the Government, when requested by the Contracting Officer, all evidence and information in possession of the Contractor pertaining to such suit or claim. Such evidence and information shall be furnished at the expense of the Government except where the Contractor has agreed to indemnify the Government.

(c) The Contractor agrees to include, and require inclusion of, this clause in all subcontracts at any tier for supplies or services (including construction and architect-engineer subcontracts and those for material, supplies, models, samples, or design or testing services) expected to exceed the simplified acquisition threshold at FAR 2.101.

(End of clause)

48 52.227-4 PATENT INDEMNITY--CONSTRUCTION CONTRACTS (APR 1984)

Except as otherwise provided, the Contractor agrees to indemnify the Government and its officers, agents, and employees against liability, including costs and expenses, for infringement upon any United States patent (except a patent issued upon an application that is now or may hereafter be withheld from issue pursuant to a Secrecy Order under 35 U.S.C. 181) arising out of performing this contract or out of the use or disposal by or for the account of the Government of supplies furnished or work performed under this contract.

(End of clause)

(R 7-602.16 1964 JUN)

49 52.228-2 ADDITIONAL BOND SECURITY (OCT 1997)

The Contractor shall promptly furnish additional security required to protect the Government and persons supplying labor or materials under this contract if--

(a) Any surety upon any bond, or issuing financial institution for other security, furnished with this contract becomes unacceptable to the Government;

(b) Any surety fails to furnish reports on its financial condition as required by the Government;

(c) The contract price is increased so that the penal sum of any bond becomes inadequate in the opinion of the Contracting Officer; or

(d) An irrevocable letter of credit (ILC) used as security will expire before the end of the period of required security. If the Contractor does

not furnish an acceptable extension or replacement ILC, or other acceptable substitute, at least 30 days before an ILC's scheduled expiration, the Contracting officer has the right to immediately draw on the ILC.

(End of clause)

50 52.228-5 INSURANCE--WORK ON A GOVERNMENT INSTALLATION (JAN 1997)

(a) The Contractor shall, at its own expense, provide and maintain during the entire performance of this contract, at least the kinds and minimum amounts of insurance required in the Schedule or elsewhere in the contract.

(b) Before commencing work under this contract, the Contractor shall notify the Contracting Officer in writing that the required insurance has been obtained. The policies evidencing required insurance shall contain an endorsement to the effect that any cancellation or any material change adversely affecting the Government's interest shall not be effective (1) for such period as the laws of the State in which this contract is to be performed prescribe, or (2) until 30 days after the insurer or the Contractor gives written notice to the Contracting Officer, whichever period is longer.

(c) The Contractor shall insert the substance of this clause, including this paragraph (c), in subcontracts under this contract that require work on a Government installation and shall require subcontractors to provide and maintain the insurance required in the Schedule or elsewhere in the contract. The Contractor shall maintain a copy of all subcontractors' proofs of required insurance, and shall make copies available to the Contracting Officer upon request.

(End of clause)

51 52.228-11 PLEDGES OF ASSETS (FEB 1992)

(a) Offerors shall obtain from each person acting as an individual surety on a bid guarantee, a performance bond, or a payment bond--

(1) Pledge of assets; and

(2) Standard Form 28, Affidavit of Individual Surety.

(b) Pledges of assets from each person acting as an individual surety shall be in the form of--

(1) Evidence of an escrow account containing cash, certificates of deposit, commercial or Government securities, or other assets described in FAR 28.203-2 (except see 28.203-2(b)(2) with respect to Government securities held in book entry form) and/or;

(2) A recorded lien on real estate. The offeror will be required to provide--

(i) Evidence of title in the form of a certificate of title prepared by a title insurance company approved by the United States Department of Justice. This title evidence must show fee simple title vested in the surety along with any concurrent owners; whether any real estate taxes are due and payable; and any recorded encumbrances against the property, including the lien filed in favor of the Government as required by FAR 28.203-3(d);

(ii) Evidence of the amount due under any encumbrance shown in the evidence of title;

(iii) A copy of the current real estate tax assessment of the property or a current appraisal dated no earlier than 6 months prior to the date of the bond, prepared by a professional appraiser who certifies that the appraisal has been conducted in accordance with the generally accepted appraisal standards as reflected in the Uniform Standards of Professional Appraisal Practice, as promulgaged by the Appraisal Foundation.

(End of clause)

52 52.228-12 PROSPECTIVE SUBCONTRACTOR REQUESTS FOR BONDS (OCT 1995)

In accordance with Section 806(a)(3) of Pub. L. 102-190, as amended by Sections 2091 and 8105 of Pub. L. 103-355, upon the request of a prospective subcontractor or supplier offering to furnish labor or material for the performance of this contract for which a payment bond has been furnished to the Government pursuant to the Miller Act, the Contractor shall promptly provide a copy of such payment bond to the requester.

(End of clause)

53 52.229-3 FEDERAL, STATE, AND LOCAL TAXES (JAN 1991)

(a) "Contract date," as used in this clause, means the date set for bid opening or, if this is a negotiated contract or a modification, the effective date of this contract or modification.

"All applicable Federal, State, and local taxes and duties," as used in this clause, means all taxes and duties, in effect on the contract date, that the taxing authority is imposing and collecting on the transactions or property covered by this contract.

"After-imposed Federal tax," as used in this clause, means any new or increased Federal excise tax or duty, or tax that was exempted or excluded on the contract date but whose exemption was later revoked or reduced during the contract period, on the transactions or property covered by this contract that the Contractor is required to pay or bear as the result of legislative, judicial, or administrative action taking effect after the contract date. It does not include social security tax or other employment taxes.

"After-relieved Federal tax," as used in this clause, means any amount of Federal excise tax or duty, except social security or other employment taxes, that would otherwise have been payable on the transactions or property covered by this contract, but which the Contractor is not required to pay or bear, or for which the Contractor obtains a refund or drawback, as the result of legislative, judicial, or administrative action taking effect after the contract date.

(b) The contract price includes all applicable Federal, State, and local taxes and duties.

(c) The contract price shall be increased by the amount of any after-imposed Federal tax, provided the Contractor warrants in writing that no amount for such newly imposed Federal excise tax or duty or rate increase

was included in the contract price, as a contingency reserve or otherwise.

(d) The contract price shall be decreased by the amount of any after-relieved Federal tax.

(e) The contract price shall be decreased by the amount of any Federal excise tax or duty, except social security or other employment taxes, that the Contractor is required to pay or bear, or does not obtain a refund of, through the Contractor's fault, negligence, or failure to follow instructions of the Contracting Officer.

(f) No adjustment shall be made in the contract price under this clause unless the amount of the adjustment exceeds $250.

(g) The Contractor shall promptly notify the Contracting Officer of all matters relating to any Federal excise tax or duty that reasonably may be expected to result in either an increase or decrease in the contract price and shall take appropriate action as the Contracting Officer directs.

(h) The Government shall, without liability, furnish evidence appropriate to establish exemption from any Federal, State, or local tax when the Contractor requests such evidence and a reasonable basis exists to sustain the exemption.

(End of clause)

54 52.232-5 PAYMENTS UNDER FIXED-PRICE CONSTRUCTION CONTRACTS (MAY 1997)

(a) Payment of price. The Government shall pay the Contractor the contract price as provided in this contract.

(b) Progress payments. The Government shall make progress payments monthly as the work proceeds, or at more frequent intervals as determined by the Contracting Officer, on estimates of work accomplished which meets the standards of quality established under the contract, as approved by the Contracting Officer.

(1) The Contractor's request for progress payments shall include the following substantiation:

(i) An itemization of the amounts requested, related to the various elements of work required by the contract covered by the payment requested.

(ii) A listing of the amount included for work performed by each subcontractor under the contract.

(iii) A listing of the total amount of each subcontract under the contract.

(iv) A listing of the amounts previously paid to each such subcontractor under the contract.

(v) Additional supporting data in a form and detail required by the Contracting Officer.

(2) In the preparation of estimates, the Contracting Officer may authorize material delivered on the site and preparatory work done to be taken into consideration. Material delivered to the Contractor at locations other than the site also may be taken into consideration if--

(i) Consideration is specifically authorized by this contract; and

(ii) The Contractor furnishes satisfactory evidence that it has acquired title to such material and that the material will be used to perform this contract.

(c) Contractor certification. Along with each request for progress

payments, the Contractor shall furnish the following certification, or payment shall not be made: (However, if the Contractor elects to delete paragraph (c)(4) from the certification, the certification is still acceptable.)

I hereby certify, to the best of my knowledge and belief, that--

(1) The amounts requested are only for performance in accordance with the specifications, terms, and conditions of the contract;

(2) Payments to subcontractors and suppliers have been made from previous payments received under the contract, and timely payments will be made from the proceeds of the payment covered by this certification, in accordance with subcontract agreements and the requirements of chapter 39 of Title 31, United States Code;

(3) This request for progress payments does not include any amounts which the prime contractor intends to withhold or retain from a subcontractor or supplier in accordance with the terms and conditions of the subcontract; and

(4) This certification is not to be construed as final acceptance of a subcontractor's performance.

_____
(Name)

_____
(Title)

_____
(Date)

(d) Refund of unearned amounts. If the Contractor, after making a certified request for progress payments, discovers that a portion or all of such request constitutes a payment for performance by the Contractor that fails to conform to the specifications, terms, and conditions of this contract (hereinafter referred to as the "unearned amount"), the Contractor shall--

(1) Notify the Contracting Officer of such performance deficiency; and

(2) Be obligated to pay the Government an amount (computed by the Contracting Officer in the manner provided in paragraph (j) of this clause) equal to interest on the unearned amount from the 8th day after the date of receipt of the unearned amount until--

(i) The date the Contractor notifies the Contracting Officer that the performance deficiency has been corrected; or

(ii) The date the Contractor reduces the amount of any subsequent certified request for progress payments by an amount equal to the unearned amount.

(e) Retainage. If the Contracting Officer finds that satisfactory progress was achieved during any period for which a progress payment is to be made, the Contracting Officer shall authorize payment to be made in full. However, if satisfactory progress has not been made, the Contracting Officer may retain a maximum of 10 percent of the amount of the payment until satisfactory progress is achieved. When the work is substantially complete, the Contracting Officer may retain from previously withheld funds and future progress payments that amount the Contracting Officer considers adequate for protection of the Government and shall release to the Contractor all the remaining withheld funds. Also, on completion and acceptance of each separate building, public work, or other division of the contract, for which the price is stated separately in the contract, payment

shall be made for the completed work without retention of a percentage.

(f) Title, liability, and reservation of rights. All material and work covered by progress payments made shall, at the time of payment, become the sole property of the Government, but this shall not be construed as--

(1) Relieving the Contractor from the sole responsibility for all material and work upon which payments have been made or the restoration of any damaged work; or

(2) Waiving the right of the Government to require the fulfillment of all of the terms of the contract.

(g) Reimbursement for bond premiums. In making these progress payments, the Government shall, upon request, reimburse the Contractor for the amount of premiums paid for performance and payment bonds (including coinsurance and reinsurance agreements, when applicable) after the Contractor has furnished evidence of full payment to the surety. The retainage provisions in paragraph (e) of this clause shall not apply to that portion of progress payments attributable to bond premiums.

(h) Final payment. The Government shall pay the amount due the Contractor under this contract after--

(1) Completion and acceptance of all work;

(2) Presentation of a properly executed voucher; and

(3) Presentation of release of all claims against the Government arising by virtue of this contract, other than claims, in stated amounts, that the Contractor has specifically excepted from the operation of the release. A release may also be required of the assignee if the Contractor's claim to amounts payable under this contract has been assigned under the Assignment of Claims Act of 1940 (31 U.S.C. 3727 and 41 U.S.C. 15).

(i) Limitation because of undefinitized work. Notwithstanding any provision of this contract, progress payments shall not exceed 80 percent on work accomplished on undefinitized contract actions. A "contract action" is any action resulting in a contract, as defined in FAR Subpart 2.1, including contract modifications for additional supplies or services, but not including contract modifications that are within the scope and under the terms of the contract, such as contract modifications issued pursuant to the Changes clause, or funding and other administrative changes.

(j) Interest computation on unearned amounts. In accordance with 31 U.S.C. 3903(c)(1), the amount payable under subparagraph (d)(2) of this clause shall be--

(1) Computed at the rate of average bond equivalent rates of 91-day Treasury bills auctioned at the most recent auction of such bills prior to the date the Contractor receives the unearned amount; and

(2) Deducted from the next available payment to the Contractor.

(End of clause)

55 52.232-17 INTEREST (JUN 1996)

(a) Except as otherwise provided in this contract under a Price Reduction for Defective Cost or Pricing Data clause or a Cost Accounting Standards clause, all amounts that become payable by the Contractor to the Government under this contract (net of any applicable tax credit under the Internal

Revenue Code (26 U.S.C. 1481)) shall bear simple interest from the date due until paid unless paid within 30 days of becoming due. The interest rate shall be the interest rate established by the Secretary of the Treasury as provided in Section 12 of the Contract Disputes Act of 1978 (Public Law 95-563), which is applicable to the period in which the amount becomes due, as provided in paragraph (b) of this clause, and then at the rate applicable for each six-month period as fixed by the Secretary until the amount is paid.

(b) Amounts shall be due at the earliest of the following dates:

(1) The date fixed under this contract.

(2) The date of the first written demand for payment consistent with this contract, including any demand resulting from a default termination.

(3) The date the Government transmits to the Contractor a proposed supplemental agreement to confirm completed negotiations establishing the amount of debt.

(4) If this contract provides for revision of prices, the date of written notice to the Contractor stating the amount of refund payable in connection with a pricing proposal or a negotiated pricing agreement not confirmed by contract modification.

(c) The interest charge made under this clause may be reduced under the procedures prescribed in 32.614-2 of the Federal Acquisition Regulation in effect on the date of this contract.

(End of clause)

56 52.232-23 ASSIGNMENT OF CLAIMS (JAN 1986)

(a) The Contractor, under the Assignment of Claims Act, as amended, 31 U.S.C. 3727, 41 U.S.C. 15 (hereafter referred to as "the Act"), may assign its rights to be paid amounts due or to become due as a result of the performance of this contract to a bank, trust company, or other financing institution, including any Federal lending agency. The assignee under such an assignment may thereafter further assign or reassign its right under the original assignment to any type of financing institution described in the preceding sentence.

(b) Any assignment or reassignment authorized under the Act and this clause shall cover all unpaid amounts payable under this contract, and shall not be made to more than one party, except that an assignment or reassignment may be made to one party as agent or trustee for two or more parties participating in the financing of this contract.

(c) The Contractor shall not furnish or disclose to any assignee under this contract any classified document (including this contract) or information related to work under this contract until the Contracting Officer authorizes such action in writing.

(End of clause)

57 52.232-27 PROMPT PAYMENT FOR CONSTRUCTION CONTRACTS (JUN 1997)

Notwithstanding any other payment terms in this contract, the Government will make invoice payments and contract financing payments under the terms and conditions specified in this clause. Payment shall be considered as

being made on the day a check is dated or the date of an electronic funds transfer. Definitions of pertinent terms are set forth in section 32.902 of the Federal Acquisition Regulation. All days referred to in this clause are calendar days, unless otherwise specified. (However, see subparagraph (a)(3) concerning payments due on Saturdays, Sundays, and legal holidays.)

(a) Invoice payments--

(1) Types of invoice payments. For purposes of this clause, there are several types of invoice payments that may occur under this contract, as follows:

(i) Progress payments, if provided for elsewhere in this contract, based on Contracting Officer approval of the estimated amount and value of work or services performed, including payments for reaching milestones in any project:

(A) The due date for making such payments shall be 14 days after receipt of the payment request by the designated billing office. If the designated billing office fails to annotate the payment request with the actual date of receipt at the time of receipt, the payment due date shall be the 14th day after the date of the Contractor's payment request, provided a proper payment request is received and there is no disagreement over quantity, quality, or Contractor compliance with contract requirements.

(B) The due date for payment of any amounts retained by the Contracting Officer in accordance with the clause at 52.232-5, Payments Under Fixed-Price Construction Contracts, shall be as specified in the contract or, if not specified, 30 days after approval for release to the Contractor by the Contracting Officer.

(ii) Final payments based on completion and acceptance of all work and presentation of release of all claims against the Government arising by virtue of the contract, and payments for partial deliveries that have been accepted by the Government (e.g., each separate building, public work, or other division of the contract for which the price is stated separately in the contract):

(A) The due date for making such payments shall be either the 30th day after receipt by the designated billing office of a proper invoice from the Contractor, or the 30th day after Government acceptance of the work or services completed by the Contractor, whichever is later. If the designated billing office fails to annotate the invoice with the date of actual receipt at the time of receipt, the invoice payment due date shall be the 30th day after the date of the Contractor's invoice, provided a proper invoice is received and there is no disagreement over quantity, quality, or Contractor compliance with contract requirements.

(B) On a final invoice where the payment amount is subject to contract settlement actions (e.g., release of claims), acceptance shall be deemed to have occurred on the effective date of the contract settlement.

(2) Contractor's invoice. The Contractor shall prepare and submit invoices to the designated billing office specified in the contract. A proper invoice must include the items listed in paragraphs (a)(2)(i) through (a)(2)(ix) of this clause. If the invoice does not comply with these requirements, it shall be returned within 7 days after the date the designated billing office received the invoice, with a statement of the

reasons why it is not a proper invoice. Untimely notification will be taken into account in computing any interest penalty owed the Contractor in the manner described in subparagraph (a)(4) of this clause.

(i) Name and address of the Contractor.

(ii) Invoice date. (The Contractor is encouraged to date invoices as close as possible to the date of mailing or transmission.)

(iii) Contract number or other authorization for work or services performed (including order number and contract line item number).

(iv) Description of work or services performed.

(v) Delivery and payment terms (e.g., prompt payment discount terms).

(vi) Name and address of Contractor official to whom payment is to be sent (must be the same as that in the contract or in a proper notice of assignment).

(vii) Name (where practicable), title, phone number, and mailing address of person to be notified in the event of a defective invoice.

(viii) For payments described in paragraph (a)(1)(i) of this clause, substantiation of the amounts requested and certification in accordance with the requirements of the clause at 52.232-5, Payments Under Fixed-Price Construction Contracts.

(ix) Any other information or documentation required by the contract.

(x) While not required, the Contractor is strongly encouraged to assign an identification number to each invoice.

(3) Interest penalty. An interest penalty shall be paid automatically by the designated payment office, without request from the Contractor, if payment is not made by the due date and the conditions listed in paragraphs (a)(3)(i) through (a)(3)(iii) of this clause are met, if applicable. However, when the due date falls on a Saturday, Sunday, or legal holiday when Federal Government offices are closed and Government business is not expected to be conducted, payment may be made on the following business day without incurring a late payment interest penalty.

(i) A proper invoice was received by the designated billing office.

(ii) A receiving report or other Government documentation authorizing payment was processed and there was no disagreement over quantity, quality, Contractor compliance with any contract term or condition, or requested progress payment amount.

(iii) In the case of a final invoice for any balance of funds due the Contractor for work or services performed, the amount was not subject to further contract settlement actions between the Government and the Contractor.

(4) Computing penalty amount. The interest penalty shall be at the rate established by the Secretary of the Treasury under section 12 of the Contract Disputes Act of 1978 (41 U.S.C. 611) that is in effect on the day after the due date, except where the interest penalty is prescribed by other governmental authority (e.g., tariffs). This rate is referred to as the "Renegotiation Board Interest Rate," and it is published in the Federal Register semiannually on or about January 1 and July 1. The interest penalty shall accrue daily on the invoice principal payment amount approved by the Government until the payment date of such approved principal amount; and will be compounded in 30-day increments inclusive from the first day after the due date through the payment date. That is, interest accrued at the end of any 30-day period will be added to the approved invoice principal payment amount and will be subject to interest

penalties if not paid in the succeeding 30-day period. If the designated billing office failed to notify the Contractor of a defective invoice within the periods prescribed in subparagraph (a)(2) of this clause, the due date on the corrected invoice will be adjusted by subtracting from such date the number of days taken beyond the prescribed notification of defects period. Any interest penalty owed the Contractor will be based on this adjusted due date. Adjustments will be made by the designated payment office for errors in calculating interest penalties.

(i) For the sole purpose of computing an interest penalty that might be due the Contractor for payments described in paragraph (a)(1)(ii) of this clause, Government acceptance or approval shall be deemed to have occurred constructively on the 7th day after the Contractor has completed the work or services in accordance with the terms and conditions of the contract. In the event that actual acceptance or approval occurs within the constructive acceptance or approval period, the determination of an interest penalty shall be based on the actual date of acceptance or approval. Constructive acceptance or constructive approval requirements do not apply if there is a disagreement over quantity, quality, or Contractor compliance with a contract provision. These requirements also do not compel Government officials to accept work or services, approve Contractor estimates, perform contract administration functions, or make payment prior to fulfilling their responsibilities.

(ii) The following periods of time will not be included in the determination of an interest penalty:

(A) The period taken to notify the Contractor of defects in invoices submitted to the Government, but this may not exceed 7 days.

(B) The period between the defects notice and resubmission of the corrected invoice by the Contractor.

(C) For incorrect electronic funds transfer (EFT) information, in accordance with the EFT clause of this contract.

(iii) Interest penalties will not continue to accrue after the filing of a claim for such penalties under the clause at 52.233-1, Disputes, or for more than 1 year. Interest penalties of less than $1 need not be paid.

(iv) Interest penalties are not required on payment delays due to disagreement between the Government and the Contractor over the payment amount or other issues involving contract compliance, or on amounts temporarily withheld or retained in accordance with the terms of the contract. Claims involving disputes, and any interest that may be payable, will be resolved in accordance with the clause at 52.233-1, Disputes.

(5) Prompt payment discounts. An interest penalty also shall be paid automatically by the designated payment office, without request from the Contractor, if a discount for prompt payment is taken improperly. The interest penalty will be calculated on the amount of discount taken for the period beginning with the first day after the end of the discount period through the date when the Contractor is paid.

(6) Additional interest penalty.

(i) A penalty amount, calculated in accordance with subdivision (a)(6)(iii) of this clause, shall be paid in addition to the interest penalty amount if the Contractor--

(A) Is owed an interest penalty of $1 or more;

(B) Is not paid the interest penalty within 10 days after the date the invoice amount is paid; and

(C) Makes a written demand to the designated payment office for additional penalty payment, in accordance with subdivision (a)(6)(ii) of this clause, postmarked not later than 40 days after the date the invoice amount is paid.

(ii)(A) Contractors shall support written demands for additional penalty payments with the following data. No additional data shall be required. Contractors shall--

(1) Specifically assert that late payment interest is due under a specific invoice, and request payment of all overdue late payment interest penalty and such additional penalty as may be required;

(2) Attach a copy of the invoice on which the unpaid late payment interest was due; and

(3) State that payment of the principal has been received, including the date of receipt.

(B) Demands must be postmarked on or before the 40th day after payment was made, except that--

(1) If the postmark is illegible or nonexistent, the demand must have been received and annotated with the date of receipt by the designated payment office on or before the 40th day after payment was made; or

(2) If the postmark is illegible or nonexistent and the designated payment office fails to make the required annotation, the demand's validity will be determined by the date the Contractor has placed on the demand; provided such date is no later than the 40th day after payment was made.

(iii)(A) The additional penalty shall be equal to 100 percent of any original late payment interest penalty, except--

(1) The additional penalty shall not exceed $5,000;

(2) The additional penalty shall never be less than $25; and

(3) No additional penalty is owed if the amount of the underlying interest penalty is less than $1.

(B) If the interest penalty ceases to accrue in accordance with the limits stated in subdivision (a)(4)(iii) of this clause, the amount of the additional penalty shall be calculated on the amount of interest penalty that would have accrued in the absence of these limits, subject to the overall limits on the additional penalty specified in subdivision (a)(6)(iii)(A) of this clause.

(C) For determining the maximum and minimum additional penalties, the test shall be the interest penalty due on each separate payment made for each separate contract. The maximum and minimum additional penalty shall not be based upon individual invoices unless the invoices are paid separately. Where payments are consolidated for disbursing purposes, the maximum and minimum additional penalty determination shall be made separately for each contract therein.

(D) The additional penalty does not apply to payments regulated by other Government regulations (e.g., payments under utility contracts subject to tariffs and regulation).

(b) Contract financing payments--

(1) Due dates for recurring financing payments. If this contract

provides for contract financing, requests for payment shall be submitted to the designated billing office as specified in this contract or as directed by the Contracting Officer. Contract financing payments shall be made on the 30th day after receipt of a proper contract financing request by the designated billing office. In the event that an audit or other review of a specific financing request is required to ensure compliance with the terms and conditions of the contract, the designated payment office is not compelled to make payment by the due date specified.

(2) Due dates for other contract financing. For advance payments, loans, or other arrangements that do not involve recurring submissions of contract financing requests, payment shall be made in accordance with the corresponding contract terms or as directed by the Contracting Officer.

(3) Interest penalty not applicable. Contract financing payments shall not be assessed an interest penalty for payment delays.

(c) Subcontract clause requirements. The Contractor shall include in each subcontract for property or services (including a material supplier) for the purpose of performing this contract the following:

(1) Prompt payment for subcontractors. A payment clause that obligates the Contractor to pay the subcontractor for satisfactory performance under its subcontract not later than 7 days from receipt of payment out of such amounts as are paid to the Contractor under this contract.

(2) Interest for subcontractors. An interest penalty clause that obligates the Contractor to pay to the subcontractor an interest penalty for each payment not made in accordance with the payment clause--

(i) For the period beginning on the day after the required payment date and ending on the date on which payment of the amount due is made; and

(ii) Computed at the rate of interest established by the Secretary of the Treasury, and published in the Federal Register, for interest payments under section 12 of the Contract Disputes Act of 1978 (41 U.S.C. 611) in effect at the time the Contractor accrues the obligation to pay an interest penalty.

(3) Subcontractor clause flowdown. A clause requiring each subcontractor to include a payment clause and an interest penalty clause conforming to the standards set forth in subparagraphs (c)(1) and (c)(2) of this clause in each of its subcontracts, and to require each of its subcontractors to include such clauses in their subcontracts with each lower-tier subcontractor or supplier.

(d) Subcontract clause interpretation. The clauses required by paragraph (c) of this clause shall not be construed to impair the right of the Contractor or a subcontractor at any tier to negotiate, and to include in their subcontract, provisions that--

(1) Retainage permitted. Permit the Contractor or a subcontractor to retain (without cause) a specified percentage of each progress payment otherwise due to a subcontractor for satisfactory performance under the subcontract without incurring any obligation to pay a late payment interest penalty, in accordance with terms and conditions agreed to by the parties to the subcontract, giving such recognition as the parties deem appropriate to the ability of a subcontractor to furnish a performance bond and a payment bond;

(2) Withholding permitted. Permit the Contractor or subcontractor to

make a determination that part or all of the subcontractor's request for payment may be withheld in accordance with the subcontract agreement; and

(3) Withholding requirements. Permit such withholding without incurring any obligation to pay a late payment penalty if--

(i) A notice conforming to the standards of paragraph (g) of this clause previously has been furnished to the subcontractor; and

(ii) A copy of any notice issued by a Contractor pursuant to subdivision (d)(3)(i) of this clause has been furnished to the Contracting Officer.

(e) Subcontractor withholding procedures. If a Contractor, after making a request for payment to the Government but before making a payment to a subcontractor for the subcontractor's performance covered by the payment request, discovers that all or a portion of the payment otherwise due such subcontractor is subject to withholding from the subcontractor in accordance with the subcontract agreement, then the Contractor shall--

(1) Subcontractor notice. Furnish to the subcontractor a notice conforming to the standards of paragraph (g) of this clause as soon as practicable upon ascertaining the cause giving rise to a withholding, but prior to the due date for subcontractor payment;

(2) Contracting Officer notice. Furnish to the Contracting Officer, as soon as practicable, a copy of the notice furnished to the subcontractor pursuant to subparagraph (e)(1) of this clause;

(3) Subcontractor progress payment reduction. Reduce the subcontractor's progress payment by an amount not to exceed the amount specified in the notice of withholding furnished under subparagraph (e)(1) of this clause;

(4) Subsequent subcontractor payment. Pay the subcontractor as soon as practicable after the correction of the identified subcontract performance deficiency, and--

(i) Make such payment within--

(A) Seven days after correction of the identified subcontract performance deficiency (unless the funds therefor must be recovered from the Government because of a reduction under paragraph (e)(5)(i)) of this clause; or

(B) Seven days after the Contractor recovers such funds from the Government; or

(ii) Incur an obligation to pay a late payment interest penalty computed at the rate of interest established by the Secretary of the Treasury, and published in the Federal Register, for interest payments under section 12 of the Contracts Disputes Act of 1978 (41 U.S.C. 611) in effect at the time the Contractor accrues the obligation to pay an interest penalty;

(5) Notice to Contracting Officer. Notify the Contracting Officer upon--

(i) Reduction of the amount of any subsequent certified application for payment; or

(ii) Payment to the subcontractor of any withheld amounts of a progress payment, specifying--

(A) The amounts withheld under subparagraph (e)(1) of this clause; and

(B) The dates that such withholding began and ended; and

(6) Interest to Government. Be obligated to pay to the Government an

amount equal to interest on the withheld payments (computed in the manner provided in 31 U.S.C. 3903(c)(1)), from the 8th day after receipt of the withheld amounts from the Government until--

(i) The day the identified subcontractor performance deficiency is corrected; or

(ii) The date that any subsequent payment is reduced under subdivision (e)(5)(i) of this clause.

(f) Third-party deficiency reports--

(1) Withholding from subcontractor. If a Contractor, after making payment to a first-tier subcontractor, receives from a supplier or subcontractor of the first-tier subcontractor (hereafter referred to as a "second-tier subcontractor") a written notice in accordance with section 2 of the Act of August 24, 1935 (40 U.S.C. 270b, Miller Act), asserting a deficiency in such first-tier subcontractor's performance under the contract for which the Contractor may be ultimately liable, and the Contractor determines that all or a portion of future payments otherwise due such first-tier subcontractor is subject to withholding in accordance with the subcontract agreement, the Contractor may, without incurring an obligation to pay an interest penalty under subparagraph (e)(6) of this clause--

(i) Furnish to the first-tier subcontractor a notice conforming to the standards of paragraph (g) of this clause as soon as practicable upon making such determination; and

(ii) Withhold from the first-tier subcontractor's next available progress payment or payments an amount not to exceed the amount specified in the notice of withholding furnished under paragraph (f)(1)(i) of this clause.

(2) Subsequent payment or interest charge. As soon as practicable, but not later than 7 days after receipt of satisfactory written notification that the identified subcontract performance deficiency has been corrected, the Contractor shall--

(i) Pay the amount withheld under paragraph (f)(1)(ii) of this clause to such first-tier subcontractor; or

(ii) Incur an obligation to pay a late payment interest penalty to such first-tier subcontractor computed at the rate of interest established by the Secretary of the Treasury, and published in the Federal Register, for interest payments under section 12 of the Contracts Disputes Act of 1978 (41 U.S.C. 611) in effect at the time the Contractor accrues the obligation to pay an interest penalty.

(g) Written notice of subcontractor withholding. A written notice of any withholding shall be issued to a subcontractor (with a copy to the Contracting Officer of any such notice issued by the Contractor), specifying--

(1) The amount to be withheld;

(2) The specific causes for the withholding under the terms of the subcontract; and

(3) The remedial actions to be taken by the subcontractor in order to receive payment of the amounts withheld.

(h) Subcontractor payment entitlement. The Contractor may not request payment from the Government of any amount withheld or retained in accordance with paragraph (d) of this clause until such time as the Contractor has determined and certified to the Contracting Officer that the

subcontractor is entitled to the payment of such amount.

(i) Prime-subcontractor disputes. A dispute between the Contractor and subcontractor relating to the amount or entitlement of a subcontractor to a payment or a late payment interest penalty under a clause included in the subcontract pursuant to paragraph (c) of this clause does not constitute a dispute to which the United States is a party. The United States may not be interpleaded in any judicial or administrative proceeding involving such a dispute.

(j) Preservation of prime-subcontractor rights. Except as provided in paragraph (i) of this clause, this clause shall not limit or impair any contractual, administrative, or judicial remedies otherwise available to the Contractor or a subcontractor in the event of a dispute involving late payment or nonpayment by the Contractor or deficient subcontract performance or nonperformance by a subcontractor.

(k) Non-recourse for prime contractor interest penalty. The Contractor's obligation to pay an interest penalty to a subcontractor pursuant to the clauses included in a subcontract under paragraph (c) of this clause shall not be construed to be an obligation of the United States for such interest penalty. A cost-reimbursement claim may not include any amount for reimbursement of such interest penalty.

(End of clause)

58 52.232-34 OPTIONAL INFORMATION FOR ELECTRONIC FUNDS TRANSFER PAYMENT (AUG 1996)

(a) Method of payment.

(1) Except as provided in paragraph (a)(2) of this clause, after the Contractor provides the information described in paragraph (d) of this clause, in accordance with paragraph (b) of this clause, payments by the Government under this contract, including invoice and contract financing payments, may be made by check or electronic funds transfer (EFT) at the option of the Government. If payment is made by EFT, the Government may, at its option, also forward the associated payment information by electronic transfer. As used in this clause, the term "EFT" refers to the funds transfer and may also include the information transfer.

(2) Notwithstanding the provision of this clause making the furnishing of EFT information optional, the Contractor shall furnish the EFT information described in paragraph (d) for any payment to be made after January 1, 1999.

(b) Contractor consent.

(1) If the Contractor is willing to be paid by EFT, the Contractor shall provide the EFT information described in paragraph (d) of this clause. The Contractor agrees that, after providing EFT information in accordance with this clause, the Contractor cannot withdraw the Government's right to make payment by EFT for this contract.

(2) If the Contractor provides EFT information applicable to multiple contracts, the Contractor shall specifically state the applicability of this EFT information in terms acceptable to the payment office.

(c) Contractor's EFT information. Prior to submission of the first request for payment (whether for invoice or contract financing payment) under this contract, for which the Contractor desires EFT payment, the

Contractor shall provide the information required to make contract payment by EFT, as described in paragraph (d) of this clause, directly to the Government payment office named in this contract. If more than one payment office is named for the contract, the Contractor shall provide a separate notice to each office. In the event that the EFT information changes, the Contractor shall be responsible for providing the changed information to the designated payment office(s).

(d) Required EFT information. The Government may make payment by EFT through either an Automated Clearing House (ACH) subject to the domestic banking laws of the United States or the Federal Reserve Wire Transfer System at the Government's option. The Contractor shall provide the following information for both methods in a form acceptable to the designated payment office. The Contractor may supply this data for this or multiple contracts (see paragraph (b) of this clause).

(1) The contract number to which this notice applies.

(2) The Contractor's name and remittance address, as stated in the contract, and account number at the Contractor's financial agent.

(3) The signature (manual or electronic, as appropriate), title, and telephone number of the Contractor official authorized to provide this information.

(4) For ACH payment only:

(i) Name, address, and 9-digit Routing Transit Number of the Contractor's financial agent.

(ii) Contractor's account number and the type of account (checking, saving, or lockbox).

(5) For Federal Reserve Wire Transfer System payments only:

(i) Name, address, telegraphic abbreviation, and the 9-digit Routing Transit Number for the Contractor's financial agent.

(ii) If the Contractor's financial agent is not directly on-line to the Federal Reserve Wire Transfer System and, therefore, not the receiver of the wire transfer payment, the Contractor shall also provide the name, address, and 9-digit Routing Transit Number of the correspondent financial institution receiving the wire transfer payment.

(e) Suspension of payment.

(1) Notwithstanding the provisions of any other clause of this contract, if, after receipt of the Contractor's EFT information in accordance with paragraph (b) of this clause, the EFT information is found to be incorrect, or, for payment after January 1, 1999, if EFT information has not been furnished, then until receipt by the designated payment office of the correct EFT information from the Contractor, (i) the Government is not required to make any further payment under this contract; and (ii) any invoice or contract financing request shall be deemed not to be a valid invoice or contract financing request as defined in the Prompt Payment clause of this contract.

(2) If the EFT information changes after submission of correct EFT information, the Government shall begin using the changed EFT information no later than the 30th day after its receipt to the extent payment is made by EFT. However, the Contractor may request that no further payments be made until the changed EFT information is implemented by the payment office. If such suspension would result in a late payment under the Prompt Payment clause of this contract, the Contractor's request for

suspension shall extend the due date for payment by the number of days of the suspension.

(f) Contractor EFT arrangements. The Contractor shall designate a single financial agent capable of receiving and processing the electronic funds transfer using the EFT methods described in paragraph (d) of this clause. The Contractor shall pay all fees and charges for receipt and processing of transfers.

(g) Liability for uncompleted or erroneous transfers.

(1) If an uncompleted or erroneous transfer occurs because the Government failed to use the Contractor-provided EFT information in the correct manner, the Government remains responsible for (i) making a correct payment, (ii) paying any prompt payment penalty due, and (iii) recovering any erroneously directed funds.

(2) If an uncompleted or erroneous transfer occurs because Contractor-provided EFT information was incorrect at the time of Government release of the EFT payment transaction instruction to the Federal Reserve System, and--

(i) If the funds are no longer under the control of the payment office, the Government is deemed to have made payment and the Contractor is responsible for recovery of any erroneously directed funds; or

(ii) If the funds remain under the control of the payment office, the Government retains the right to either make payment by mail or suspend the payment in accordance with paragraph (e) of this clause.

(h) EFT and prompt payment.

(1) A payment shall be deemed to have been made in a timely manner in accordance with the Prompt Payment clause of this contract if, in the EFT payment transaction instruction given to the Federal Reserve System, the date specified for settlement of the payment is on or before the prompt payment due date, provided the specified payment date is a valid date under the rules of the Federal Reserve System.

(2) When payment cannot be made by EFT because of incorrect EFT information provided by the Contractor, no interest penalty is due after the date of the uncompleted or erroneous payment transaction, provided that notice of the defective EFT information is issued to the Contractor within 7 days after the Government is notified of the defective EFT information.

(i) EFT and assignment of claims. If the Contractor assigns the proceeds of this contract as provided for in the Assignment of Claims clause of this contract, the assignee shall provide the assignee EFT information required by paragraph (d) of this clause. In all respects, the requirements of this clause shall apply to the assignee as if it were the Contractor. EFT information which shows the ultimate recipient of the transfer to be other than the Contractor, in the absence of a proper assignment of claims acceptable to the Government, is incorrect EFT information within the meaning of paragraph (e) of this clause.

(j) Payment office discretion. If, after submitting the EFT information, the Contractor does not wish to receive payment by EFT methods for one or more payments, the Contractor may submit a request to the designated payment office to refrain from using the EFT payment method. The decision to grant the request is solely that of the Government.

(k) Change of EFT information by financial agent. The Contractor agrees that the Contractor's financial agent may notify the Government of a change to the routing transit number, Contractor account number, or account type. The Government shall use the changed data in accordance with paragraph (e)(2) of this clause. The Contractor agrees that the information provided by the agent is deemed to be correct information as if it were provided by the Contractor. The Contractor agrees that the agent's notice of changed EFT data is deemed to be a request by the Contractor in accordance with paragraph (e)(2) that no further payments be made until the changed EFT information is implemented by the payment office.

(End of clause)

59 52.233-1 DISPUTES (OCT 1995)

(a) This contract is subject to the Contract Disputes Act of 1978, as amended (41 U.S.C. 601-613).

(b) Except as provided in the Act, all disputes arising under or relating to this contract shall be resolved under this clause.

(c) "Claim," as used in this clause, means a written demand or written assertion by one of the contracting parties seeking, as a matter of right, the payment of money in a sum certain, the adjustment or interpretation of contract terms, or other relief arising under or relating to this contract. A claim arising under a contract, unlike a claim relating to that contract, is a claim that can be resolved under a contract clause that provides for the relief sought by the claimant. However, a written demand or written assertion by the Contractor seeking the payment of money exceeding $100,000 is not a claim under the Act until certified as required by subparagraph (d)(2) of this clause. A voucher, invoice, or other routine request for payment that is not in dispute when submitted is not a claim under the Act. The submission may be converted to a claim under the Act, by complying with the submission and certification requirements of this clause, if it is disputed either as to liability or amount or is not acted upon in a reasonable time.

(d)(1) A claim by the Contractor shall be made in writing and, unless otherwise stated in this contract, submitted within 6 years after accrual of the claim to the Contracting Officer for a written decision. A claim by the Government against the Contractor shall be subject to a written decision by the Contracting Officer.

(2)(i) Contractors shall provide the certification specified in subparagraph (d)(2)(iii) of this clause when submitting any claim--

(A) Exceeding $100,000; or

(B) Regardless of the amount claimed, when using--

(1) Arbitration conducted pursuant to 5 U.S.C. 575-580; or

(2) Any other alternative means of dispute resolution (ADR) technique that the agency elects to handle in accordance with the Administrative Dispute Resolution Act (ADRA).

(ii) The certification requirement does not apply to issues in controversy that have not been submitted as all or part of a claim.

(iii) The certification shall state as follows:

"I certify that the claim is made in good faith; that the supporting data are accurate and complete to the best of my knowledge and belief;

that the amount requested accurately reflects the contract adjustment for which the Contractor believes the Government is liable; and that I am duty authorized to certify the claim on behalf of the Contractor."

(3) The certification may be executed by any person duly authorized to bind the Contractor with respect to the claim.

(e) For Contractor claims of $100,000 or less, the Contracting Officer must, if requested in writing by the Contractor, render a decision within 60 days of the request. For Contractor-certified claims over $100,000, the Contracting Officer must, within 60 days, decide the claim or notify the Contractor of the date by which the decision will be made.

(f) The Contracting Officer's decision shall be final unless the Contractor appeals or files a suit as provided in the Act.

(g) If the claim by the Contractor is submitted to the Contracting Officer or a claim by the Government is presented to the Contractor, the parties, by mutual consent, may agree to use ADR. If the Contractor refuses an offer for alternative disputes resolution, the Contractor shall inform the Contracting Officer, in writing, of the Contractor's specific reasons for rejecting the request. When using arbitration conducted pursuant to 5 U.S.C. 575-580, or when using any other ADR technique that the agency elects to handle in accordance with the ADRA, any claim, regardless of amount, shall be accompanied by the certification described in subparagraph (d)(2)(iii) of this clause, and executed in accordance with subparagraph (d)(3) of this clause.

(h) The Government shall pay interest on the amount found due and unpaid from (1) the date that the Contracting Officer receives the claim (certified, if required); or (2) the date that payment otherwise would be due, if that date is later, until the date of payment. With regard to claims having defective certifications, as defined in (FAR) 48 CFR 33.201, interest shall be paid from the date that the Contracting Officer initially receives the claim. Simple interest on claims shall be paid at the rate, fixed by the Secretary of the Treasury as provided in the Act, which is applicable to the period during which the Contracting Officer receives the claim and then at the rate applicable for each 6-month period as fixed by the Treasury Secretary during the pendency of the claim.

(i) The Contractor shall proceed diligently with performance of this contract, pending final resolution of any request for relief, claim, appeal, or action arising under the contract, and comply with any decision of the Contracting Officer.

(End of clause)

60 52.233-3 PROTEST AFTER AWARD (AUG 1996)

(a) Upon receipt of a notice of protest (as defined in FAR 33.101) or a determination that a protest is likely (see FAR 33.102(d)), the Contracting Officer may, by written order to the Contractor, direct the Contractor to stop performance of the work called for by this contract. The order shall be specifically identified as a stop-work order issued under this clause. Upon receipt of the order, the Contractor shall immediately comply with its terms and take all reasonable steps to minimize the incurrence of costs allocable to the work covered by the order during the period of work stoppage. Upon receipt of the final decision in the protest, the

Contracting Officer shall either--

(1) Cancel the stop-work order; or

(2) Terminate the work covered by the order as provided in the Default, or the Termination for Convenience of the Government, clause of this contract.

(b) If a stop-work order issued under this clause is canceled either before or after a final decision in the protest, the Contractor shall resume work. The Contracting Officer shall make an equitable adjustment in the delivery schedule or contract price, or both, and the contract shall be modified, in writing, accordingly, if--

(1) The stop-work order results in an increase in the time required for, or in the Contractor's cost properly allocable to, the performance of any part of this contract; and

(2) The Contractor asserts its right to an adjustment within 30 days after the end of the period of work stoppage; provided, that if the Contracting Officer decides the facts justify the action, the Contracting Officer may receive and act upon a proposal at any time before final payment under this contract.

(c) If a stop-work order is not canceled and the work covered by the order is terminated for the convenience of the Government, the Contracting Officer shall allow reasonable costs resulting from the stop-work order in arriving at the termination settlement.

(d) If a stop-work order is not canceled and the work covered by the order is terminated for default, the Contracting Officer shall allow, by equitable adjustment or otherwise, reasonable costs resulting from the stop-work order.

(e) The Government's rights to terminate this contract at any time are not affected by action taken under this clause.

(f) If, as the result of the Contractor's intentional or negligent misstatement, misrepresentation, or miscertification, a protest related to this contract is sustained, and the Government pays costs, as provided in FAR 33.102(b)(2) or 33.104(h)(1), the Government may require the Contractor to reimburse the Government the amount of such costs. In addition to any other remedy available, and pursuant to the requirements of Subpart 32.6, the Government may collect this debt by offsetting the amount against any payment due the Contractor under any contract between the Contractor and the Government.

(End of clause)

61 52.236-2 DIFFERING SITE CONDITIONS (APR 1984)

(a) The Contractor shall promptly, and before the conditions are disturbed, give a written notice to the Contracting Officer of (1) subsurface or latent physical conditions at the site which differ materially from those indicated in this contract, or (2) unknown physical conditions at the site, of an unusual nature, which differ materially from those ordinarily encountered and generally recognized as inhering in work of the character provided for in the contract.

(b) The Contracting Officer shall investigate the site conditions promptly after receiving the notice. If the conditions do materially so differ and cause an increase or decrease in the Contractor's cost

of, or the time required for, performing any part of the work under this contract, whether or not changed as a result of the conditions, an equitable adjustment shall be made under this clause and the contract modified in writing accordingly.

(c) No request by the Contractor for an equitable adjustment to the contract under this clause shall be allowed, unless the Contractor has given the written notice required; provided, that the time prescribed in (a) above for giving written notice may be extended by the Contracting Officer.

(d) No request by the Contractor for an equitable adjustment to the contract for differing site conditions shall be allowed if made after final payment under this contract.

(End of clause)

62 52.236-3 SITE INVESTIGATION AND CONDITIONS AFFECTING THE WORK (APR 1984)

(a) The Contractor acknowledges that it has taken steps reasonably necessary to ascertain the nature and location of the work, and that it has investigated and satisfied itself as to the general and local conditions which can affect the work or its cost, including but not limited to (1) conditions bearing upon transportation, disposal, handling, and storage of materials; (2) the availability of labor, water, electric power, and roads; (3) uncertainties of weather, river stages, tides, or similar physical conditions at the site; (4) the conformation and conditions of the ground; and (5) the character of equipment and facilities needed preliminary to and during work performance. The Contractor also acknowledges that it has satisfied itself as to the character, quality, and quantity of surface and subsurface materials or obstacles to be encountered insofar as this information is reasonably ascertainable from an inspection of the site, including all exploratory work done by the Government, as well as from the drawings and specifications made a part of this contract. Any failure of the Contractor to take the actions described and acknowledged in this paragraph will not relieve the Contractor from responsibility for estimating properly the difficulty and cost of successfully performing the work, or for proceeding to successfully perform the work without additional expense to the Government.

(b) The Government assumes no responsibility for any conclusions or interpretations made by the Contractor based on the information made available by the Government. Nor does the Government assume responsibility for any understanding reached or representation made concerning conditions which can affect the work by any of its officers or agents before the execution of this contract, unless that understanding or representation is expressly stated in this contract.

(End of clause)

63 52.236-5 MATERIAL AND WORKMANSHIP (APR 1984)

(a) All equipment, material, and articles incorporated into the work covered by this contract shall be new and of the most suitable grade for

the purpose intended, unless otherwise specifically provided in this contract. References in the specifications to equipment, material, articles, or patented processes by trade name, make, or catalog number, shall be regarded as establishing a standard of quality and shall not be construed as limiting competition. The Contractor may, at its option, use any equipment, material, article, or process that, in the judgment of the Contracting Officer, is equal to that named in the specifications, unless otherwise specifically provided in this contract.

(b) The Contractor shall obtain the Contracting Officer's approval of the machinery and mechanical and other equipment to be incorporated into the work. When requesting approval, the Contractor shall furnish to the Contracting Officer the name of the manufacturer, the model number, and other information concerning the performance, capacity, nature, and rating of the machinery and mechanical and other equipment. When required by this contract or by the Contracting Officer, the Contractor shall also obtain the Contracting Officer's approval of the material or articles which the Contractor contemplates incorporating into the work. When requesting approval, the Contractor shall provide full information concerning the material or articles. When directed to do so, the Contractor shall submit samples for approval at the Contractor's expense, with all shipping charges prepaid. Machinery, equipment, material, and articles that do not have the required approval shall be installed or used at the risk of subsequent rejection.

(c) All work under this contract shall be performed in a skillful and workmanlike manner. The Contracting Officer may require, in writing, that the Contractor remove from the work any employee the Contracting Officer deems incompetent, careless, or otherwise objectionable.

(End of clause)

(R 7-602.9 1964 JUN)

64 52.236-6 SUPERINTENDENCE BY THE CONTRACTOR (APR 1984)

At all times during performance of this contract and until the work is completed and accepted, the Contractor shall directly superintend the work or assign and have on the work site a competent superintendent who is satisfactory to the Contracting Officer and has authority to act for the Contractor.

(End of clause)

65 52.236-7 PERMITS AND RESPONSIBILITIES (NOV 1991)

The Contractor shall, without additional expense to the Government, be responsible for obtaining any necessary licenses and permits, and for complying with any Federal, State, and municipal laws, codes, and regulations applicable to the performance of the work. The Contractor shall also be responsible for all damages to persons or property that occur as a result of the Contractor's fault or negligence. The Contractor shall also be responsible for all materials delivered and work performed until completion and acceptance of the entire work, except for any completed unit of work which may have been accepted under the contract.

(End of clause)

66 52.236-8 OTHER CONTRACTS (APR 1984)

The Government may undertake or award other contracts for additional work at or near the site of the work under this contract. The Contractor shall fully cooperate with the other contractors and with Government employees and shall carefully adapt scheduling and performing the work under this contract to accommodate the additional work, heeding any direction that may be provided by the Contracting Officer. The Contractor shall not commit or permit any act that will interfere with the performance of work by any other contractor or by Government employees.

(End of clause)

67 52.236-9 PROTECTION OF EXISTING VEGETATION, STRUCTURES, EQUIPMENT, UTILITIES, AND IMPROVEMENTS (APR 1984)

(a) The Contractor shall preserve and protect all structures, equipment, and vegetation (such as trees, shrubs, and grass) on or adjacent to the work site, which are not to be removed and which do not unreasonably interfere with the work required under this contract. The Contractor shall only remove trees when specifically authorized to do so, and shall avoid damaging vegetation that will remain in place. If any limbs or branches of trees are broken during contract performance, or by the careless operation of equipment, or by workmen, the Contractor shall trim those limbs or branches with a clean cut and paint the cut with a tree-pruning compound as directed by the Contracting Officer.

(b) The Contractor shall protect from damage all existing improvements and utilities (1) at or near the work site, and (2) on adjacent property of a third party, the locations of which are made known to or should be known by the Contractor. The Contractor shall repair any damage to those facilities, including those that are the property of a third party, resulting from failure to comply with the requirements of this contract or failure to exercise reasonable care in performing the work. If the Contractor fails or refuses to repair the damage promptly, the Contracting Officer may have the necessary work performed and charge the cost to the Contractor.

(End of clause)

68 52.236-10 OPERATIONS AND STORAGE AREAS (APR 1984)

(a) The Contractor shall confine all operations (including storage of materials) on Government premises to areas authorized or approved by the Contracting Officer. The Contractor shall hold and save the Government, its officers and agents, free and harmless from liability of any nature occasioned by the Contractor's performance.

(b) Temporary buildings (e.g., storage sheds, shops, offices) and utilities may be erected by the Contractor only with the approval of the Contracting Officer and shall be built with labor and materials furnished by the Contractor without expense to the Government. The temporary buildings and utilities shall remain the property of the Contractor and shall be removed by the Contractor at its expense upon

completion of the work. With the written consent of the Contracting Officer, the buildings and utilities may be abandoned and need not be removed.

(c) The Contractor shall, under regulations prescribed by the Contracting Officer, use only established roadways, or use temporary roadways constructed by the Contractor when and as authorized by the Contracting Officer. When materials are transported in prosecuting the work, vehicles shall not be loaded beyond the loading capacity recommended by the manufacturer of the vehicle or prescribed by any Federal, State, or local law or regulation. When it is necessary to cross curbs or sidewalks, the Contractor shall protect them from damage. The Contractor shall repair or pay for the repair of any damaged curbs, sidewalks, or roads.

(End of clause)

69 52.236-11 USE AND POSSESSION PRIOR TO COMPLETION (APR 1984)

(a) The Government shall have the right to take possession of or use any completed or partially completed part of the work. Before taking possession of or using any work, the Contracting Officer shall furnish the Contractor a list of items of work remaining to be performed or corrected on those portions of the work that the Government intends to take possession of or use. However, failure of the Contracting Officer to list any item of work shall not relieve the Contractor of responsibility for complying with the terms of the contract. The Government's possession or use shall not be deemed an acceptance of any work under the contract.

(b) While the Government has such possession or use, the Contractor shall be relieved of the responsibility for the loss of or damage to the work resulting from the Government's possession or use, notwithstanding the terms of the clause in this contract entitled "Permits and Responsibilities." If prior possession or use by the Government delays the progress of the work or causes additional expense to the Contractor, an equitable adjustment shall be made in the contract price or the time of completion, and the contract shall be modified in writing accordingly.

(End of clause)

70 52.236-12 CLEANING UP (APR 1984)

The Contractor shall at all times keep the work area, including storage areas, free from accumulations of waste materials. Before completing the work, the Contractor shall remove from the work and premises any rubbish, tools, scaffolding, equipment, and materials that are not the property of the Government. Upon completing the work, the Contractor shall leave the work area in a clean, neat, and orderly condition satisfactory to the Contracting Officer.

(End of clause)

71 52.236-13 I ACCIDENT PREVENTION (NOV 1991)--ALTERNATE I (NOV 1991)

(a) The Contractor shall provide and maintain work environments and procedures which will (1) safeguard the public and Government personnel, property, materials, supplies, and equipment exposed to Contractor operations and activities; (2) avoid interruptions of Government operations and delays in project completion dates; and (3) control costs in the performance of this contract.

(b) For these purposes on contracts for construction or dismantling, demolition, or removal of improvements, the Contractor shall--

(1) Provide appropriate safety barricades, signs, and signal lights;

(2) Comply with the standards issued by the Secretary of Labor at 29 CFR Part 1926 and 29 CFR Part 1910; and

(3) Ensure that any additional measures the Contracting Officer determines to be reasonably necessary for the purposes are taken.

(c) If this contract is for construction or dismantling, demolition or removal of improvements with any Department of Defense agency or component, the Contractor shall comply with all pertinent provisions of the latest version of U.S. Army Corps of Engineers Safety and Health Requirements Manual, EM 385-1-1, in effect on the date of the solicitation.

(d) Whenever the Contracting Officer becomes aware of any noncompliance with these requirements or any condition which poses a serious or imminent danger to the health or safety of the public or Government personnel, the Contracting Officer shall notify the Contractor orally, with written confirmation, and request immediate initiation of corrective action. This notice, when delivered to the Contractor or the Contractor's representative at the work site, shall be deemed sufficient notice of the noncompliance and that corrective action is required. After receiving the notice, the Contractor shall immediately take corrective action. If the Contractor fails or refuses to promptly take corrective action, the Contracting Officer may issue an order stopping all or part of the work until satisfactory corrective action has been taken. The Contractor shall not be entitled to any equitable adjustment of the contract price or extension of the performance schedule on any stop work order issued under this clause.

(e) The Contractor shall insert this clause, including this paragraph (e), with appropriate changes in the designation of the parties, in subcontracts.

(f) Before commencing the work, the Contractor shall--

(1) Submit a written proposed plan for implementing this clause. The plan shall include an analysis of the significant hazards to life, limb, and property inherent in contract work performance and a plan for controlling these hazards; and

(2) Meet with representatives of the Contracting Officer to discuss and develop a mutual understanding relative to administration of the overall safety program.

(End of clause)

72 52.236-15 SCHEDULES FOR CONSTRUCTION CONTRACTS (APR 1984)

(a) The Contractor shall, within five days after the work commences on

the contract or another period of time determined by the Contracting Officer, prepare and submit to the Contracting Officer for approval three copies of a practicable schedule showing the order in which the Contractor proposes to perform the work, and the dates on which the Contractor contemplates starting and completing the several salient features of the work (including acquiring materials, plant, and equipment). The schedule shall be in the form of a progress chart of suitable scale to indicate appropriately the percentage of work scheduled for completion by any given date during the period. If the Contractor fails to submit a schedule within the time prescribed, the Contracting Officer may withhold approval of progress payments until the Contractor submits the required schedule.

(b) The Contractor shall enter the actual progress on the chart as directed by the Contracting Officer, and upon doing so shall immediately deliver three copies of the annotated schedule to the Contracting Officer. If, in the opinion of the Contracting Officer, the Contractor falls behind the approved schedule, the Contractor shall take steps necessary to improve its progress, including those that may be required by the Contracting Officer, without additional cost to the Government. In this circumstance, the Contracting Officer may require the Contractor to increase the number of shifts, overtime operations, days of work, and/or the amount of construction plant, and to submit for approval any supplementary schedule or schedules in chart form as the Contracting Officer deems necessary to demonstrate how the approved rate of progress will be regained.

(c) Failure of the Contractor to comply with the requirements of the Contracting Officer under this clause shall be grounds for a determination by the Contracting Officer that the Contractor is not prosecuting the work with sufficient diligence to ensure completion within the time specified in the contract. Upon making this determination, the Contracting Officer may terminate the Contractor's right to proceed with the work, or any separable part of it, in accordance with the default terms of this contract.

(End of clause)

73 52.236-21 SPECIFICATIONS AND DRAWINGS FOR CONSTRUCTION (FEB 1997)

(a) The Contractor shall keep on the work site a copy of the drawings and specifications and shall at all times give the Contracting Officer access thereto. Anything mentioned in the specifications and not shown on the drawings, or shown on the drawings and not mentioned in the specifications, shall be of like effect as if shown or mentioned in both. In case of difference between drawings and specifications, the specifications shall govern. In case of discrepancy in the figures, in the drawings, or in the specifications, the matter shall be promptly submitted to the Contracting Officer, who shall promptly make a determination in writing. Any adjustment by the Contractor without such a determination shall be at its own risk and expense. The Contracting Officer shall furnish from time to time such detailed drawings and other information as considered necessary, unless otherwise provided.

(b) Wherever in the specifications or upon the drawings the words "directed", "required", "ordered", "designated", "prescribed", or words of like import are used, it shall be understood that the "direction", "requirement", "order", "designation", or "prescription", of the

Contracting Officer is intended and similarly the words "approved", "acceptable", "satisfactory", or words of like import shall mean "approved by", or "acceptable to", or "satisfactory to" the Contracting Officer, unless otherwise expressly stated.

(c) Where "as shown," "as indicated", "as detailed", or words of similar import are used, it shall be understood that the reference is made to the drawings accompanying this contract unless stated otherwise. The word "provided" as used herein shall be understood to mean "provide complete in place," that is "furnished and installed".

(d) Shop drawings means drawings, submitted to the Government by the Contractor, subcontractor, or any lower tier subcontractor pursuant to a construction contract, showing in detail (1) the proposed fabrication and assembly of structural elements, and (2) the installation (i.e., fit, and attachment details) of materials or equipment. It includes drawings, diagrams, layouts, schematics, descriptive literature, illustrations, schedules, performance and test data, and similar materials furnished by the contractor to explain in detail specific portions of the work required by the contract. The Government may duplicate, use, and disclose in any manner and for any purpose shop drawings delivered under this contract.

(e) If this contract requires shop drawings, the Contractor shall coordinate all such drawings, and review them for accuracy, completeness, and compliance with contract requirements and shall indicate its approval thereon as evidence of such coordination and review. Shop drawings submitted to the Contracting Officer without evidence of the Contractor's approval may be returned for resubmission. The Contracting Officer will indicate an approval or disapproval of the shop drawings and if not approved as submitted shall indicate the Government's reasons therefor. Any work done before such approval shall be at the Contractor's risk. Approval by the Contracting Officer shall not relieve the Contractor from responsibility for any errors or omissions in such drawings, nor from responsibility for complying with the requirements of this contract, except with respect to variations described and approved in accordance with (f) below.

(f) If shop drawings show variations from the contract requirements, the Contractor shall describe such variations in writing, separate from the drawings, at the time of submission. If the Contracting Officer approves any such variation, the Contracting Officer shall issue an appropriate contract modification, except that, if the variation is minor or does not involve a change in price or in time of performance, a modification need not be issued.

(g) The Contractor shall submit to the Contracting Officer for approval four copies (unless otherwise indicated) of all shop drawings as called for under the various headings of these specifications. Three sets (unless otherwise indicated) of all shop drawings, will be retained by the Contracting Officer and one set will be returned to the Contractor.

(End of clause)

74 52.236-26 PRECONSTRUCTION CONFERENCE (FEB 1995)

If the Contracting Officer decides to conduct a preconstruction conference, the successful offeror will be notified and will be required to

attend. The Contracting Officer's notification will include specific details regarding the date, time, and location of the conference, any need for attendance by subcontractors, and information regarding the items to be discussed.

(End of clause)

75 52.242-13 BANKRUPTCY (JUL 1995)

In the event the Contractor enters into proceedings relating to bankruptcy, whether voluntary or involuntary, the Contractor agrees to furnish, by certified mail or electronic commerce method authorized by the contract, written notification of the bankruptcy to the Contracting Officer responsible for administering the contract. This notification shall be furnished within five days of the initiation of the proceedings relating to bankruptcy filing. This notification shall include the date on which the bankruptcy petition was filed, the identity of the court in which the bankruptcy petition was filed, and a listing of Government contract numbers and contracting offices for all Government contracts against which final payment has not been made. This obligation remains in effect until final payment under this contract.

(End of clause)

76 52.242-14 SUSPENSION OF WORK (APR 1984)

(a) The Contracting Officer may order the Contractor, in writing, to suspend, delay, or interrupt all or any part of the work of this contract for the period of time that the Contracting Officer determines appropriate for the convenience of the Government.

(b) If the performance of all or any part of the work is, for an unreasonable period of time, suspended, delayed, or interrupted (1) by an act of the Contracting Officer in the administration of this contract, or (2) by the Contracting Officer's failure to act within the time specified in this contract (or within a reasonable time if not specified), an adjustment shall be made for any increase in the cost of performance of this contract (excluding profit) necessarily caused by the unreasonable suspension, delay, or interruption, and the contract modified in writing accordingly. However, no adjustment shall be made under this clause for any suspension, delay, or interruption to the extent that performance would have been so suspended, delayed, or interrupted by any other cause, including the fault or negligence of the Contractor, or for which an equitable adjustment is provided for or excluded under any other term or condition of this contract.

(c) A claim under this clause shall not be allowed (1) for any costs incurred more than 20 days before the Contractor shall have notified the Contracting Officer in writing of the act or failure to act involved (but this requirement shall not apply as to a claim resulting from a suspension order), and (2) unless the claim, in an amount stated, is asserted in writing as soon as practicable after the termination of the suspension, delay, or interruption, but not later than the date of final payment under the contract.

(End of clause)

77 52.243-4 CHANGES (AUG 1987)

(a) The Contracting Officer may, at any time, without notice to the sureties, if any, by written order designated or indicated to be a change order, make changes in the work within the general scope of the contract, including changes--

(1) In the specifications (including drawings and designs);

(2) In the method or manner of performance of the work;

(3) In the Government-furnished facilities, equipment, materials, services, or site; or

(4) Directing acceleration in the performance of the work.

(b) Any other written or oral order (which, as used in this paragraph (b), includes direction, instruction, interpretation, or determination) from the Contracting Officer that causes a change shall be treated as a change order under this clause; provided, that the Contractor gives the Contracting Officer written notice stating (1) the date, circumstances, and source of the order and (2) that the Contractor regards the order as a change order.

(c) Except as provided in this clause, no order, statement, or conduct of the Contracting Officer shall be treated as a change under this clause or entitle the Contractor to an equitable adjustment.

(d) If any change under this clause causes an increase or decrease in the Contractor's cost of, or the time required for, the performance of any part of the work under this contract, whether or not changed by any such order, the Contracting Officer shall make an equitable adjustment and modify the contract in writing. However, except for an adjustment based on defective specifications, no adjustment for any change under paragraph (b) of this clause shall be made for any costs incurred more than 20 days before the Contractor gives written notice as required. In the case of defective specifications for which the Government is responsible, the equitable adjustment shall include any increased cost reasonably incurred by the Contractor in attempting to comply with the defective specifications.

(e) The Contractor must assert its right to an adjustment under this clause within 30 days after (1) receipt of a written change order under paragraph (a) of this clause or (2) the furnishing of a written notice under paragraph (b) of this clause, by submitting to the Contracting Officer a written statement describing the general nature and amount of the proposal, unless this period is extended by the Government. The statement of proposal for adjustment may be included in the notice under paragraph (b) above.

(f) No proposal by the Contractor for an equitable adjustment shall be allowed if asserted after final payment under this contract.

(End of clause)

78 52.244-1 SUBCONTRACTS (FIXED-PRICE CONTRACTS) (OCT 1997)

(a) This clause does not apply to firm-fixed-price contracts and fixed-price contracts with economic price adjustment. However, it does apply to subcontracts resulting from unpriced modifications to such contracts.

(b) "Subcontract," as used in this clause, includes but is not limited to purchase orders, and changes and modifications to purchase orders. The

Contractor shall notify the Contracting Officer reasonably in advance of entering into any subcontract if the Contractor does not have an approved purchasing system and if the subcontract--

(1) Is proposed to exceed $100,000; or

(2) Is one of a number of subcontracts with a single subcontractor, under this contract, for the same or related supplies or services, that in the aggregate are expected to exceed $100,000.

(c) The advance notification required by paragraph (b) above shall include--

(1) A description of the supplies or services to be subcontracted;

(2) Identification of the type of subcontract to be used;

(3) Identification of the proposed subcontractor and an explanation of why and how the proposed subcontractor was selected, including the competition obtained;

(4) The proposed subcontract price and the Contractor's cost or price analysis;

(5) The subcontractor's current, complete, and accurate cost or pricing data and Certificate of Current Cost or Pricing Data, if required by other contract provisions;

(6) The subcontractor's Disclosure Statement or Certificate relating to Cost Accounting Standards when such data are required by other provisions of this contract; and

(7) A negotiation memorandum reflecting--

(i) The principal elements of the subcontract price negotiations;

(ii) The most significant considerations controlling establishment of initial or revised prices;

(iii) The reason cost or pricing data were or were not required;

(iv) The extent, if any, to which the Contractor did not rely on the subcontractor's cost or pricing data in determining the price objective and in negotiating the final price;

(v) The extent, if any, to which it was recognized in the negotiation that the subcontractor's cost or pricing data were not accurate, complete, or current; the action taken by the Contractor and subcontractor; and the effect of any such defective data on the total price negotiated;

(vi) The reasons for any significant difference between the Contractor's price objective and the price negotiated; and

(vii) A complete explanation of the incentive fee or profit plan when incentives are used. The explanation shall identify each critical performance element, management decisions used to quantify each incentive element, reasons for the incentives, and a summary of all trade-off possibilities considered.

(d) The Contractor shall obtain the Contracting Officer's written consent before placing any subcontract for which advance notification is required under paragraph (b) above. However, the Contracting Officer may ratify in writing any such subcontract. Ratification shall constitute the consent of the Contracting Officer.

(e) Even if the Contractor's purchasing system has been approved, the Contractor shall obtain the Contracting Officer's written consent before placing subcontracts identified below: _____

(f) Unless the consent or approval specifically provides otherwise, neither consent by the Contracting Officer to any subcontract nor approval

of the Contractor's purchasing system shall constitute a determination (1) of the acceptability of any subcontract terms or conditions, (2) of the acceptability of any subcontract price or of any amount paid under any subcontract, or (3) to relieve the Contractor of any responsibility for performing this contract.

(g) No subcontract placed under this contract shall provide for payment on a cost-plus-a-percentage-of-cost basis, and any fee payable under cost-reimbursement subcontracts shall not exceed the fee limitations in subsection 15.404-4(c)(4)(i) of the Federal Acquisition Regulation (FAR).

(h) The Government reserves the right to review the Contractor's purchasing system as set forth in FAR Subpart 44.3.

(End of clause)

79 52.245-1 PROPERTY RECORDS (APR 1984)

The Government shall maintain the Government's official property records in connection with Government property under this contract. The Government Property clause is hereby modified by deleting the requirement for the Contractor to maintain such records.

(End of clause)

(AV 7-104.24(g) 1967 AUG)

80 52.246-12 INSPECTION OF CONSTRUCTION (AUG 1996)

(a) Definition. "Work" includes, but is not limited to, materials, workmanship, and manufacture and fabrication of components.

(b) The Contractor shall maintain an adequate inspection system and perform such inspections as will ensure that the work performed under the contract conforms to contract requirements. The Contractor shall maintain complete inspection records and make them available to the Government. All work shall be conducted under the general direction of the Contracting Officer and is subject to Government inspection and test at all places and at all reasonable times before acceptance to ensure strict compliance with the terms of the contract.

(c) Government inspections and tests are for the sole benefit of the Government and do not--

(1) Relieve the Contractor of responsibility for providing adequate quality control measures;

(2) Relieve the Contractor of responsibility for damage to or loss of the material before acceptance;

(3) Constitute or imply acceptance; or

(4) Affect the continuing rights of the Government after acceptance of the completed work under paragraph (i) below.

(d) The presence or absence of a Government inspector does not relieve the Contractor from any contract requirement, nor is the inspector authorized to change any term or condition of the specification without the Contracting Officer's written authorization.

(e) The Contractor shall promptly furnish, at no increase in contract price, all facilities, labor, and material reasonably needed for performing such safe and convenient inspections and tests as may be required by the

Contracting Officer. The Government may charge to the Contractor any additional cost of inspection or test when work is not ready at the time specified by the Contractor for inspection or test, or when prior rejection makes reinspection or retest necessary. The Government shall perform all inspections and tests in a manner that will not unnecessarily delay the work. Special, full size, and performance tests shall be performed as described in the contract.

(f) The Contractor shall, without charge, replace or correct work found by the Government not to conform to contract requirements, unless in the public interest the Government consents to accept the work with an appropriate adjustment in contract price. The Contractor shall promptly segregate and remove rejected material from the premises.

(g) If the Contractor does not promptly replace or correct rejected work, the Government may (1) by contract or otherwise, replace or correct the work and charge the cost to the Contractor or (2) terminate for default the Contractor's right to proceed.

(h) If, before acceptance of the entire work, the Government decides to examine already completed work by removing it or tearing it out, the Contractor, on request, shall promptly furnish all necessary facilities, labor, and material. If the work is found to be defective or nonconforming in any material respect due to the fault of the Contractor or its subcontractors, the Contractor shall defray the expenses of the examination and of satisfactory reconstruction. However, if the work is found to meet contract requirements, the Contracting Officer shall make an equitable adjustment for the additional services involved in the examination and reconstruction, including, if completion of the work was thereby delayed, an extension of time.

(i) Unless otherwise specified in the contract, the Government shall accept, as promptly as practicable after completion and inspection, all work required by the contract or that portion of the work the Contracting Officer determines can be accepted separately. Acceptance shall be final and conclusive except for latent defects, fraud, gross mistakes amounting to fraud, or the Government's rights under any warranty or guarantee.

(End of clause)

81 52.248-3 I VALUE ENGINEERING--CONSTRUCTION (MAR 1989)--ALTERNATE I (APR 1984)

(a) General. The Contractor is encouraged to develop, prepare, and submit value engineering change proposals (VECP's) voluntarily. The Contractor shall share in any instant contract savings realized from accepted VECP's, in accordance with paragraph (f) below.

(b) Definitions. "Collateral costs," as used in this clause, means agency costs of operation, maintenance, logistic support, or Government-furnished property.

"Collateral savings," as used in this clause, means those measurable net reductions resulting from a VECP in the agency's overall projected collateral costs, exclusive of acquisition savings, whether or not the acquisition cost changes.

"Contractor's development and implementation costs," as used in this clause, means those costs the Contractor incurs on a VECP specifically in

developing, testing, preparing, and submitting the VECP, as well as those costs the Contractor incurs to make the contractual changes required by Government acceptance of a VECP.

"Government costs," as used in this clause, means those agency costs that result directly from developing and implementing the VECP, such as any net increases in the cost of testing, operations, maintenance, and logistic support. The term does not include the normal administrative costs of processing the VECP.

"Instant contract savings," as used in this clause, means the estimated reduction in Contractor cost of performance resulting from acceptance of the VECP, minus allowable Contractor's development and implementation costs, including subcontractors' development and implementation costs (see paragraph (h) below).

"Value engineering change proposal (VECP)" means a proposal that--

(1) Requires a change to this, the instant contract, to implement; and

(2) Results in reducing the contract price or estimated cost without impairing essential functions or characteristics; provided, that it does not involve a change--

(i) In deliverable end item quantities only; or

(ii) To the contract type only.

(c) VECP preparation. As a minimum, the Contractor shall include in each VECP the information described in subparagraphs (1) through (7) below. If the proposed change is affected by contractually required configuration management or similar procedures, the instructions in those procedures relating to format, identification, and priority assignment shall govern VECP preparation. The VECP shall include the following:

(1) A description of the difference between the existing contract requirement and that proposed, the comparative advantages and disadvantages of each, a justification when an item's function or characteristics are being altered, and the effect of the change on the end item's performance.

(2) A list and analysis of the contract requirements that must be changed if the VECP is accepted, including any suggested specification revisions.

(3) A separate, detailed cost estimate for (i) the affected portions of the existing contract requirement and (ii) the VECP. The cost reduction associated with the VECP shall take into account the Contractor's allowable development and implementation costs, including any amount attributable to subcontracts under paragraph (h) below.

(4) A description and estimate of costs the Government may incur in implementing the VECP, such as test and evaluation and operating and support costs.

(5) A prediction of any effects the proposed change would have on collateral costs to the agency.

(6) A statement of the time by which a contract modification accepting the VECP must be issued in order to achieve the maximum cost reduction, noting any effect on the contract completion time or delivery schedule.

(7) Identification of any previous submissions of the VECP, including the dates submitted, the agencies and contract numbers involved, and previous Government actions, if known.

(d) Submission. The Contractor shall submit VECP's to the Resident Engineer at the worksite, with a copy to the Contracting Officer.

(e) Government action. (1) The Contracting Officer shall notify the Contractor of the status of the VECP within 45 calendar days after the contracting office receives it. If additional time is required, the Contracting Officer shall notify the Contractor within the 45-day period and provide the reason for the delay and the expected date of the decision. The Government will process VECP's expeditiously; however, it shall not be liable for any delay in acting upon a VECP.

(2) If the VECP is not accepted, the Contracting Officer shall notify the Contractor in writing, explaining the reasons for rejection. The Contractor may withdraw any VECP, in whole or in part, at any time before it is accepted by the Government. The Contracting Officer may require that the Contractor provide written notification before undertaking significant expenditures for VECP effort.

(3) Any VECP may be accepted, in whole or in part, by the Contracting Officer's award of a modification to this contract citing this clause. The Contracting Officer may accept the VECP, even though an agreement on price reduction has not been reached, by issuing the Contractor a notice to proceed with the change. Until a notice to proceed is issued or a contract modification applies a VECP to this contract, the Contractor shall perform in accordance with the existing contract. The Contracting Officer's decision to accept or reject all or part of any VECP shall be final and not subject to the Disputes clause or otherwise subject to litigation under the Contract Disputes Act of 1978 (41 U.S.C. 601-613).

(f) Sharing. (1) Rates. The Government's share of savings is determined by subtracting Government costs from instant contract savings and multiplying the result by (i) 45 percent for fixed-price contracts or (ii) 75 percent for cost-reimbursement contracts.

(2) Payment. Payment of any share due the Contractor for use of a VECP on this contract shall be authorized by a modification to this contract to--

(i) Accept the VECP;

(ii) Reduce the contract price or estimated cost by the amount of instant contract savings; and

(iii) Provide the Contractor's share of savings by adding the amount calculated to the contract price or fee.

(g) Subcontracts. The Contractor shall include an appropriate value engineering clause in any subcontract of $50,000 or more and may include one in subcontracts of lesser value. In computing any adjustment in this contract's price under paragraph (f) above, the Contractor's allowable development and implementation costs shall include any subcontractor's allowable development and implementation costs clearly resulting from a VECP accepted by the Government under this contract, but shall exclude any value engineering incentive payments to a subcontractor. The Contractor may choose any arrangement for subcontractor value engineering incentive payments; provided, that these payments shall not reduce the Government's share of the savings resulting from the VECP.

(h) Data. The Contractor may restrict the Government's right to use any part of a VECP or the supporting data by marking the following legend on the affected parts:

"These data, furnished under the Value Engineering--Construction clause of contract _____, shall not be disclosed outside the Government or duplicated, used, or disclosed, in whole or in part, for any

purpose other than to evaluate a value engineering change proposal submitted under the clause. This restriction does not limit the Government's right to use information contained in these data if it has been obtained or is otherwise available from the Contractor or from another source without limitations."

If a VECP is accepted, the Contractor hereby grants the Government unlimited rights in the VECP and supporting data, except that, with respect to data qualifying and submitted as limited rights technical data, the Government shall have the rights specified in the contract modification implementing the VECP and shall appropriately mark the data. (The terms "unlimited rights" and "limited rights" are defined in Part 27 of the Federal Acquisition Regulation.)

(End of clause)

82 52.249-2 I TERMINATION FOR CONVENIENCE OF THE GOVERNMENT (FIXED-PRICE) (SEP 1996)--ALTERNATE I (SEP 1996)

(a) The Government may terminate performance of work under this contract in whole or, from time to time, in part if the Contracting Officer determines that a termination is in the Government's interest. The Contracting Officer shall terminate by delivering to the Contractor a Notice of Termination specifying the extent of termination and the effective date.

(b) After receipt of a Notice of Termination, and except as directed by the Contracting Officer, the Contractor shall immediately proceed with the following obligations, regardless of any delay in determining or adjusting any amounts due under this clause:

(1) Stop work as specified in the notice.

(2) Place no further subcontracts or orders (referred to as subcontracts in this clause) for materials, services, or facilities, except as necessary to complete the continued portion of the contract.

(3) Terminate all subcontracts to the extent they relate to the work terminated.

(4) Assign to the Government, as directed by the Contracting Officer, all right, title, and interest of the Contractor under the subcontracts terminated, in which case the Government shall have the right to settle or to pay any termination settlement proposal arising out of those terminations.

(5) With approval or ratification to the extent required by the Contracting Officer, settle all outstanding liabilities and termination settlement proposals arising from the termination of subcontracts; the approval or ratification will be final for purposes of this clause.

(6) As directed by the Contracting Officer, transfer title and deliver to the Government (i) the fabricated or unfabricated parts, work in process, completed work, supplies, and other material produced or acquired for the work terminated, and (ii) the completed or partially completed plans, drawings, information, and other property that, if the contract had been completed, would be required to be furnished to the Government.

(7) Complete performance of the work not terminated.

(8) Take any action that may be necessary, or that the Contracting

Officer may direct, for the protection and preservation of the property related to this contract that is in the possession of the Contractor and in which the Government has or may acquire an interest.

(9) Use its best efforts to sell, as directed or authorized by the Contracting Officer, any property of the types referred to in subparagraph (b)(6) of this clause; provided, however, that the Contractor (i) is not required to extend credit to any purchaser and (ii) may acquire the property under the conditions prescribed by, and at prices approved by, the Contracting Officer. The proceeds of any transfer or disposition will be applied to reduce any payments to be made by the Government under this contract, credited to the price or cost of the work, or paid in any other manner directed by the Contracting Officer.

(c) The Contractor shall submit complete termination inventory schedules no later than 120 days from the effective date of termination, unless extended in writing by the Contracting Officer upon written request of the Contractor within this 120-day period.

(d) After expiration of the plant clearance period as defined in Subpart 45.6 of the Federal Acquisition Regulation, the Contractor may submit to the Contracting Officer a list, certified as to quantity and quality, of termination inventory not previously disposed of, excluding items authorized for disposition by the Contracting Officer. The Contractor may request the Government to remove those items or enter into an agreement for their storage. Within 15 days, the Government will accept title to those items and remove them or enter into a storage agreement. The Contracting Officer may verify the list upon removal of the items, or if stored, within 45 days from submission of the list, and shall correct the list, as necessary, before final settlement.

(e) After termination, the Contractor shall submit a final termination settlement proposal to the Contracting Officer in the form and with the certification prescribed by the Contracting Officer. The Contractor shall submit the proposal promptly, but no later than 1 year from the effective date of termination, unless extended in writing by the Contracting Officer upon written request of the Contractor within this 1 year period. However, if the Contracting Officer determines that the facts justify it, a termination settlement proposal may be received and acted on after 1 year or any extension. If the Contractor fails to submit the proposal within the time allowed, the Contracting Officer may determine, on the basis of information available, the amount, if any, due the Contractor because of the termination and shall pay the amount determined.

(f) Subject to paragraph (e) of this clause, the Contractor and the Contracting Officer may agree upon the whole or any part of the amount to be paid or remaining to be paid because of the termination. The amount may include a reasonable allowance for profit on work done. However, the agreed amount, whether under this paragraph (f) or paragraph (g) of this clause, exclusive of costs shown in subparagraph (g)(3) of this clause, may not exceed the total contract price as reduced by (1) the amount of payments previously made and (2) the contract price of work not terminated. The contract shall be modified, and the Contractor paid the agreed amount. Paragraph (g) of this clause shall not limit, restrict, or affect the amount that may be agreed upon to be paid under this paragraph.

(g) If the Contractor and Contracting Officer fail to agree on the whole

amount to be paid the Contractor because of the termination of work, the Contracting Officer shall pay the Contractor the amounts determined as follows, but without duplication of any amounts agreed upon under paragraph (f) of this clause:

(1) For contract work performed before the effective date of termination, the total (without duplication of any items) of--

(i) The cost of this work;

(ii) The cost of settling and paying termination settlement proposals under terminated subcontracts that are properly chargeable to the terminated portion of the contract if not included in subdivision (g)(1)(i) of this clause; and

(iii) A sum, as profit on subdivision (g)(1)(i) of this clause, determined by the Contracting Officer under 49.202 of the Federal Acquisition Regulation, in effect on the date of this contract, to be fair and reasonable; however, if it appears that the Contractor would have sustained a loss on the entire contract had it been completed, the Contracting Officer shall allow no profit under this subdivision (iii) and shall reduce the settlement to reflect the indicated rate of loss.

(2) The reasonable costs of settlement of the work terminated, including--

(i) Accounting, legal, clerical, and other expenses reasonably necessary for the preparation of termination settlement proposals and supporting data;

(ii) The termination and settlement of subcontracts (excluding the amounts of such settlements); and

(iii) Storage, transportation, and other costs incurred, reasonably necessary for the preservation, protection, or disposition of the termination inventory.

(h) Except for normal spoilage, and except to the extent that the Government expressly assumed the risk of loss, the Contracting Officer shall exclude from the amounts payable to the Contractor under paragraph (g) of this clause, the fair value, as determined by the Contracting Officer, of property that is destroyed, lost, stolen, or damaged so as to become undeliverable to the Government or to a buyer.

(i) The cost principles and procedures of Part 31 of the Federal Acquisition Regulation, in effect on the date of this contract, shall govern all costs claimed, agreed to, or determined under this clause.

(j) The Contractor shall have the right of appeal, under the Disputes clause, from any determination made by the Contracting Officer under paragraph (e), (g), or (l) of this clause, except that if the Contractor failed to submit the termination settlement proposal or request for equitable adjustment within the time provided in paragraph (e) or (l), respectively, and failed to request a time extension, there is no right of appeal.

(k) In arriving at the amount due the Contractor under this clause, there shall be deducted--

(1) All unliquidated advance or other payments to the Contractor under the terminated portion of this contract;

(2) Any claim which the Government has against the Contractor under this contract; and

(3) The agreed price for, or the proceeds of sale of, materials, supplies, or other things acquired by the Contractor or sold under the

provisions of this clause and not recovered by or credited to the Government.

(l) If the termination is partial, the Contractor may file a proposal with the Contracting Officer for an equitable adjustment of the price(s) of the continued portion of the contract. The Contracting Officer shall make any equitable adjustment agreed upon. Any proposal by the Contractor for an equitable adjustment under this clause shall be requested within 90 days from the effective date of termination unless extended in writing by the Contracting Officer.

(m)(1) The Government may, under the terms and conditions it prescribes, make partial payments and payments against costs incurred by the Contractor for the terminated portion of the contract, if the Contracting Officer believes the total of these payments will not exceed the amount to which the Contractor will be entitled.

(2) If the total payments exceed the amount finally determined to be due, the Contractor shall repay the excess to the Government upon demand, together with interest computed at the rate established by the Secretary of the Treasury under 50 U.S.C. App. 1215(b)(2). Interest shall be computed for the period from the date the excess payment is received by the Contractor to the date the excess is repaid. Interest shall not be charged on any excess payment due to a reduction in the Contractor's termination settlement proposal because of retention or other disposition of termination inventory until 10 days after the date of the retention or disposition, or a later date determined by the Contracting Officer because of the circumstances.

(n) Unless otherwise provided in this contract or by statute, the Contractor shall maintain all records and documents relating to the terminated portion of this contract for 3 years after final settlement. This includes all books and other evidence bearing on the Contractor's costs and expenses under this contract. The Contractor shall make these records and documents available to the Government, at the Contractor's office, at all reasonable times, without any direct charge. If approved by the Contracting Officer, photographs, microphotographs, or other authentic reproductions may be maintained instead of original records and documents.

(End of clause)

83 52.249-10 DEFAULT (FIXED-PRICE CONSTRUCTION) (APR 1984)

(a) If the Contractor refuses or fails to prosecute the work or any separable part, with the diligence that will insure its completion within the time specified in this contract including any extension, or fails to complete the work within this time, the Government may, by written notice to the Contractor, terminate the right to proceed with the work (or the separable part of the work) that has been delayed. In this event, the Government may take over the work and complete it by contract or otherwise, and may take possession of and use any materials, appliances, and plant on the work site necessary for completing the work. The Contractor and its sureties shall be liable for any damage to the Government resulting from the Contractor's refusal or failure to complete the work within the specified time, whether or not the Contractor's right to proceed with the

work is terminated. This liability includes any increased costs incurred by the Government in completing the work.

(b) The Contractor's right to proceed shall not be terminated nor the Contractor charged with damages under this clause, if-

(1) The delay in completing the work arises from unforeseeable causes beyond the control and without the fault or negligence of the Contractor. Examples of such causes include (i) acts of God or of the public enemy, (ii) acts of the Government in either its sovereign or contractual capacity, (iii) acts of another Contractor in the performance of a contract with the Government, (iv) fires, (v) floods, (vi) epidemics, (vii) quarantine restrictions, (viii) strikes, (ix) freight embargoes, (x) unusually severe weather, or (xi) delays of subcontractors or suppliers at any tier arising from unforeseeable causes beyond the control and without the fault or negligence of both the Contractor and the subcontractors or suppliers; and

(2) The Contractor, within 10 days from the beginning of any delay (unless extended by the Contracting Officer), notifies the Contracting Officer in writing of the causes of delay. The Contracting Officer shall ascertain the facts and the extent of delay. If, in the judgment of the Contracting Officer, the findings of fact warrant such action, the time for completing the work shall be extended. The findings of the Contracting Officer shall be final and conclusive on the parties, but subject to appeal under the Disputes clause.

(c) If, after termination of the Contractor's right to proceed, it is determined that the Contractor was not in default, or that the delay was excusable, the rights and obligations of the parties will be the same as if the termination had been issued for the convenience of the Government.

(d) The rights and remedies of the Government in this clause are in addition to any other rights and remedies provided by law or under this contract.

(End of clause)

84 52.201-7000 CONTRACTING OFFICER'S REPRESENTATIVE (DEC 1991)

(a) Definition. "Contracting officer's representative" means an individual designated in accordance with subsection 201.602-2 of the Defense Federal Acquisition Regulation Supplement and authorized in writing by the Contracting Officer to perform specific technical or administrative functions.

(b) If the Contracting Officer designates a contracting officer's representative (COR), the Contractor will receive a copy of the written designation. It will specify the extent of the COR's authority to act on behalf of the Contracting Officer. The COR is not authorized to make any commitments or changes that will affect price, quality, quantity, delivery, or any other term or condition of the contract.

(End of clause)

85 52.203-7001 SPECIAL PROHIBITION ON EMPLOYMENT (JUN 1997)

(a) Definitions.

As used in this clause--

(1) "Arising out of a contract with the DoD" means any act in connection with--

(i) Attempting to obtain,

(ii) Obtaining, or

(iii) Performing a contract or first-tier subcontract of any agency, department, or component of the Department of Defense (DoD).

(2) "Conviction of fraud or any other felony" means any conviction for fraud or a felony in violation of state or Federal criminal statutes, whether entered on a verdict or plea, including a plea of nolo contendere, for which sentence has been imposed.

(3) "Date of conviction" means the date judgment was entered against the individual.

(b) 10 U.S.C. 2408 provides that any individual who is convicted after September 29, 1988, of fraud or any other felony arising out of a contract with the DoD is prohibited from:

(1) Working in a management or supervisory capacity on any DoD contract or first-tier subcontract;

(2) Serving on the board of directors of any DoD Contractor or first-tier subcontractor; or

(3) Serving as a consultant to any DoD Contractor or first-tier subcontractor.

(c) Unless waived, the prohibition in paragraph (b) applies for five years from the date of conviction.

(d) 10 U.S.C. 2408 further provides that a defense Contractor or first-tier subcontractor shall be subject to a criminal penalty of not more than $500,000 if convicted of knowingly--

(1) Employing a person under a prohibition specified in paragraph (b) of this clause; or

(2) Allowing such a person to serve on the board of directors of the Contractor or first-tier subcontractor.

(e) In addition to the criminal penalties contained in 10 U.S.C. 2408, the Government may consider other available remedies, such as--

(1) Suspension or debarment;

(2) Cancellation of the contract at no cost to the Government; or

(3) Termination of the contract for default.

(f) The Contractor may submit written requests for waiver of the prohibitions in paragraph (b) of this clause to the Contracting Officer. Requests shall clearly identify--

(1) The person involved;

(2) The nature of the conviction and resultant sentence or punishment imposed;

(3) The reasons for the requested waiver; and,

(4) An explanation of why a waiver is in the interest of national security.

(g) The Contractor agrees to include the substance of this clause, appropriately modified to reflect the identity and relationship of the parties, in all first-tier subcontracts exceeding the simplified acquisition threshold in Part 2 of the Federal Acquisition Regulation, except those for commercial items or components.

(h) Pursuant to 10 U.S.C. 2408(c), defense contractors and subcontractors may obtain information as to whether a particular person has been convicted

of fraud or any other felony arising out of a contract with the DoD by contacting The Office of Justice Programs, The Denial of Benefits Office, U.S. Department of Justice, telephone (202) 616-3507.

(End of clause)

86 52.204-7003 CONTROL OF GOVERNMENT PERSONNEL WORK PRODUCT (APR 1992)

The Contractor's procedures for protecting against unauthorized disclosure of information shall not require Department of Defense employees or members of the Armed Forces to relinquish control of their work products, whether classified or not, to the Contractor.

(End of clause)

87 52.219-7003 SMALL, SMALL DISADVANTAGED AND WOMEN-OWNED SMALL BUSINESS SUBCONTRACTING PLAN (DoD CONTRACTS) (APR 1996)

This clause supplements the Federal Acquisition Regulation 52.219-9, Small, Small Disadvantaged and Women-Owned Small Business Subcontracting Plan, clause of this contract.

(a) Definitions.

"Historically black colleges and universities," as used in this clause, means institutions determined by the Secretary of Education to meet the requirements of 34 CFR 608.2. The term also means any nonprofit research institution that was an integral part of such a college or university before November 14, 1986.

"Minority institutions," as used in this clause, means institutions meeting the requirements of section 1046(3) of the Higher Education Act of 1965 (20 U.S.C. 1135d-5(3)). The term also includes Hispanic-serving institutions as defined in section 316(b)(1) of such Act (20 U.S.C. 1059c(b)(1)).

(b) Except for company or division-wide commercial items subcontracting plans, the term "small disadvantaged business," when used in the FAR 52.219-9 clause, includes historically black colleges and universities and minority institutions, in addition to small disadvantaged business concerns.

(c) Work under the contract or its subcontracts shall be credited toward meeting the small disadvantaged business concern goal required by paragraph (d) of the FAR 52.219-9 clause when:

(1) It is performed on Indian lands or in joint venture with an Indian tribe or a tribally-owned corporation, and

(2) It meets the requirements of 10 U.S.C. 2323a.

(d) Subcontracts awarded to workshops approved by the Committee for Purchase from People Who are Blind or Severely Disabled (41 U.S.C. 46-48), may be counted toward the Contractor's small business subcontracting goal.

(e) A mentor firm, under the Pilot Mentor-Protege Program established under Section 831 of Pub. L. 101-510, as amended, may count toward its small disadvantaged business goal, subcontracts awarded--

(1) Protege firms which are qualified organizations employing the severely handicapped; and

(2) Former protege firms that meet the criteria in Section 831(g)(4) of

Pub. L. 101-510.

(f) The master plan approval referred to in paragraph (f) of the FAR 52.219-9 clause is approval by the Contractor's cognizant contract administration activity.

(g) In those subcontracting plans which specifically identify small, small disadvantaged, and women-owned small businesses, the Contractor shall notify the Administrative Contracting Officer of any substitutions of firms that are not small, small disadvantaged, or women-owned small businesses for the firms listed in the subcontracting plan. Notifications shall be in writing and shall occur within a reasonable period of time after award of the subcontract. Contractor-specified formats shall be acceptable.

(End of clause)

88 52.223-7004 DRUG-FREE WORK FORCE (SEP 1988)

(a) Definitions.

(1) "Employee in a sensitive position," as used in this clause, means an employee who has been granted access to classified information; or employees in other positions that the Contractor determines involve national security, health or safety, or functions other than the foregoing requiring a high degree of trust and confidence.

(2) "Illegal drugs," as used in this clause, means controlled substances included in Schedules I and II, as defined by section 802(6) of Title 21 of the United States Code, the possession of which is unlawful under Chapter 13 of that Title. The term "illegal drugs" does not mean the use of a controlled substance pursuant to a valid prescription or other uses authorized by law.

(b) The Contractor agrees to institute and maintain a program for achieving the objective of a drug-free work force. While this clause defines criteria for such a program, contractors are encouraged to implement alternative approaches comparable to the criteria in paragraph (c) that are designed to achieve the objectives of this clause.

(c) Contractor programs shall include the following, or appropriate alternatives:

(1) Employee assistance programs emphasizing high level direction, education, counseling, rehabilitation, and coordination with available community resources;

(2) Supervisory training to assist in identifying and addressing illegal drug use by Contractor employees;

(3) Provision for self-referrals as well as supervisory referrals to treatment with maximum respect for individual confidentiality consistent with safety and security issues;

(4) Provision for identifying illegal drug users, including testing on a controlled and carefully monitored basis. Employee drug testing programs shall be established taking account of the following:

(i) The Contractor shall establish a program that provides for testing for the use of illegal drugs by employees in sensitive positions. The extent of and criteria for such testing shall be determined by the Contractor based on considerations that include the nature of the work being performed under the contract, the employee's duties, the efficient use of Contractor resources, and the risks to

health, safety, or national security that could result from the failure of an employee adequately to discharge his or her position.

(ii) In addition, the Contractor may establish a program for employee drug testing--

(A) When there is a reasonable suspicion that an employee uses illegal drugs; or

(B) When an employee has been involved in an accident or unsafe practice;

(C) As part of or as a follow-up to counseling or rehabilitation for illegal drug use;

(D) As part of a voluntary employee drug testing program.

(iii) The Contractor may establish a program to test applicants for employment for illegal drug use.

(iv) For the purpose of administering this clause, testing for illegal drugs may be limited to those substances for which testing is prescribed by section 2.1 of Subpart B of the "Mandatory Guidelines for Federal Workplace Drug Testing Programs" (53 FR 11980 (April 11 1988)), issued by the Department of Health and Human Services.

(d) Contractors shall adopt appropriate personnel procedures to deal with employees who are found to be using drugs illegally. Contractors shall not allow any employee to remain on duty or perform in a sensitive position who is found to use illegal drugs until such time as the Contractor, in accordance with procedures established by the Contractor, determines that the employee may perform in such a position.

(e) The provisions of this clause pertaining to drug testing programs shall not apply to the extent they are inconsistent with state or local law, or with an existing collective bargaining agreement; provided that with respect to the latter, the Contractor agrees that those issues that are in conflict will be a subject of negotiation at the next collective bargaining session.

(End of clause)

89 52.225-7012 PREFERENCE FOR CERTAIN DOMESTIC COMMODITIES (SEP 1997)

(a) The Contractor agrees to deliver under this contract only such of the following articles that have been grown, reprocessed, reused, or produced in the United States, its possessions, or Puerto Rico--

(1) Food;

(2) Clothing;

(3) Tents, tarpaulins, or covers;

(4) Cotton and other natural fiber products;

(5) Woven silk or woven silk blends;

(6) Spun silk yarn for cartridge cloth;

(7) Synthetic fabric, and coated synthetic fabric, including all textile fibers and yarns that are for use in such fabrics;

(8) Canvas products;

(9) Wool (whether in the form of fiber or yarn or contained in fabrics, materials, or manufactured articles); or

(10) Any item of individual equipment (Federal Supply Class 8465) manufactured from or containing such fibers, yarns, fabrics, or materials.

(b) This clause does not apply--

(1) To supplies listed in FAR 25.108(d)(1), or other supplies for which the Government has determined that a satisfactory quality and sufficient quantity cannot be acquired as and when needed at U.S. market prices;

(2) To foods which have been manufactured or processed in the United States, its possessions, or Puerto Rico;

(3) To chemical warfare protective clothing produced in the countries listed in subsection 225.872-1 of the Defense FAR Supplement; or

(4) To purchase of fibers and yarns that are for use in synthetic fabric or coated synthetic fabric (but not the purchase of the synthetic or coated synthetic fabric itself), if such fabric is to be used as a component of an end item that is not a textile product. Examples of textile products, made in whole or in part of fabric, include--

(i) Draperies, floor coverings, furnishings, and bedding (Federal Supply Group 72, Household and Commercial Furnishings and Appliances);

(ii) Items made in whole or in part of fabric in Federal Supply Group 83, Textile/leather/furs/apparel/findings/tents/flags, or Federal Supply Group 84, Clothing, Individual Equipment and Insignia;

(iii) Upholstered seats (whether for household, office, or other use); and

(iv) Parachutes (Federal Supply Class 1670).

(End of clause)

90 52.225-7026 REPORTING OF CONTRACT PERFORMANCE OUTSIDE THE UNITED STATES (NOV 1995)

(a) Reporting criteria.

Reporting under this clause is required for--

(1) Offers exceeding $10 million, if the Offeror is aware at the time the offer is submitted that it or its first-tier subcontractor intends to perform any part of the contract that exceeds $500,000 outside the United States and Canada, if that part could be performed inside the United States or Canada;

(2) Contracts exceeding $10 million, when any part that exceeds $500,000 could be performed inside the United States or Canada, but will be performed outside the United States and Canada. If the information was submitted with the offer, it need not be resubmitted unless it changes; and

(3) Contracts exceeding $500,000, when any part that exceeds $25,000 will be performed outside the United States, unless a foreign place of performance is--

(i) The principal place of performance; and

(ii) Indicated by the Offeror's entry in the Place of Performance provision of the solicitation.

(b) Submission of reports.

(1) The Offeror shall submit reports required by paragraph (a)(1) of this clause with its offer.

(2) The Contractor shall submit reports required by paragraph (a)(2) of this clause to the Contracting Officer as soon as the information is known, with a copy to the addressee in paragraph (b)(3) of this clause. With respect to performance by a first-tier subcontractor, this

information shall be reported, to the maximum extent practicable, at least 30 days before award of the subcontract.

(3) The Contractor shall submit reports required by paragraph (a)(3) of this clause within 10 days of the end of each Government quarter to--

Deputy Director of Defense Procurement (Foreign Contracting)
OUSD(A&T)DP(FC)
Washington, DC 20301-3060

(4) The Offeror/Contractor shall submit reports on DD Form 2139, Report of Contract Performance Outside the United States. Computer-generated reports are acceptable, provided the report contains all information required by DD Form 2139. Copies of DD Form 2139 may be obtained from the Contracting Officer.

(c) Flowdown requirements.

(1) The Contractor shall include a clause substantially the same as this one in all first-tier subcontracts exceeding $100,000, except subcontracts for commercial items, construction, ores, natural gases, utilities, petroleum products and crudes, timber (logs), or subsistence.

(2) The Contractor shall provide the prime contract number to subcontractors for reporting purposes.

(d) Information required.

Information to be reported on the part of this contract performed outside the United States (or outside the United States and Canada for reports required by paragraphs (a)(1) and (a)(2) of this clause) includes that for--

(i) Subcontracts;

(ii) Purchases; and

(iii) Intracompany transfers when transfers originate in a foreign location.

(End of clause)

91 52.227-7033 RIGHTS IN SHOP DRAWINGS (APR 1966)

(a) Shop drawings for construction means drawings, submitted to the Government by the Construction Contractor, subcontractor or any lower-tier subcontractor pursuant to a construction contract, showing in detail (i) the proposed fabrication and assembly of structural elements and (ii) the installation (i.e., form, fit, and attachment details) of materials or equipment. The Government may duplicate, use, and disclose in any manner and for any purpose shop drawings delivered under this contract.

(b) This clause, including this paragraph (b), shall be included in all subcontracts hereunder at any tier.

(End of clause)

92 52.231-7000 SUPPLEMENTAL COST PRINCIPLES (DEC 1991)

When the allowability of costs under this contract is determined in accordance with Part 31 of the Federal Acquisition Regulation (FAR), allowability shall also be determined in accordance with Part 231 of the Defense FAR Supplement, in effect on the date of this contract.

(End of clause)

93 52.232-7006 REDUCTION OR SUSPENSION OF CONTRACT PAYMENTS UPON FINDING OF FRAUD (AUG 1992)

(a) 10 U.S.C. 2307(e) permits the head of the agency to reduce or suspend further payments to the Contractor upon a written determination by the agency head that substantial evidence exists that the Contractor's request for advance, partial, or progress payments is based on fraud. The provisions of 10 U.S.C. 2307(e) are in addition to any other rights or remedies provided the Government by law or under contract.

(b) Actions taken by the Government in accordance with 10 U.S.C. 2307(e) shall not constitute an excusable delay under the Default clause of this contract or otherwise relieve the Contractor of its obligations to perform under this contract.

(End of clause)

94 52.236-7000 MODIFICATION PROPOSALS--PRICE BREAKDOWN (DEC 1991)

(a) The Contractor shall furnish a price breakdown, itemized as required and within the time specified by the Contracting Officer, with any proposal for a contract modification.

(b) The price breakdown--

(1) Must include sufficient detail to permit an analysis of profit, and of all costs for--

(i) Material;

(ii) Labor;

(iii) Equipment;

(iv) Subcontracts; and

(v) Overhead; and

(2) Must cover all work involved in the modification, whether the work was deleted, added, or changed.

(c) The Contractor shall provide similar price breakdowns to support any amounts claimed for subcontracts.

(d) The Contractor's proposal shall include a justification for any time extension proposed.

(End of clause)

95 52.236-7008 CONTRACT PRICES--BIDDING SCHEDULES (DEC 1991)

(a) The Government's payment for the items listed in the Bidding Schedule shall constitute full compensation to the Contractor for--

(1) Furnishing all plant, labor, equipment, appliances, and materials; and

(2) Performing all operations required to complete the work in conformity with the drawings and specifications.

(b) The Contractor shall include in the prices for the items listed in the Bidding Schedule all costs for work in the specifications, whether or not specifically listed in the Bidding Schedule.

(End of provision)

96 52.242-7000 POSTAWARD CONFERENCE (DEC 1991)

The Contractor agrees to attend any postaward conference convened by the contracting activity or contract administration office in accordance with Federal Acquisition Regulation Subpart 42.5.

(End of clause)

97 52.243-7001 PRICING OF CONTRACT MODIFICATIONS (DEC 1991)

When costs are a factor in any price adjustment under this contract, the contract cost principles and procedures in FAR Part 31 and DFARS Part 231, in effect on the date of this contract, apply.

(End of clause)

98 52.247-7023 TRANSPORTATION OF SUPPLIES BY SEA (NOV 1995)

(a) Definitions. As used in this clause--

(1) "Components" means articles, materials, and supplies incorporated directly into end products at any level of manufacture, fabrication, or assembly by the Contractor or any subcontractor.

(2) "Department of Defense (DoD)" means the Army, Navy, Air Force, Marine Corps, and defense agencies.

(3) "Foreign flag vessel" means any vessel that is not a U.S.-flag vessel.

(4) "Ocean transportation" means any transportation aboard a ship, vessel, boat, barge, or ferry through international waters.

(5) "Subcontractor" means a supplier, materialman, distributor, or vendor at any level below the prime contractor whose contractual obligation to perform results from, or is conditioned upon, award of the prime contract and who is performing any part of the work or other requirement of the prime contract. However, effective May 1, 1996, the term does not include a supplier, materialman, distributor, or vendor of commercial items or commercial components.

(6) "Supplies" means all property, except land and interests in land, that is clearly identifiable for eventual use by or owned by the DoD at the time of transportation by sea.

(i) An item is clearly identifiable for eventual use by the DoD if, for example, the contract documentation contains a reference to a DoD contract number or a military destination.

(ii) Supplies includes (but is not limited to) public works; buildings and facilities; ships; floating equipment and vessels of every character, type, and description, with parts, subassemblies, accessories, and equipment; machine tools; material; equipment; stores of all kinds; end items; construction materials; and components of the foregoing.

(7) "U.S.-flag vessel" means a vessel of the United States or belonging to the United States, including any vessel registered or having national status under the laws of the United States.

(b) The Contractor shall employ U.S.-flag vessels in the transportation by sea of any supplies to be furnished in the performance of this contract.

The Contractor and its subcontractors may request that the Contracting Officer authorize shipment in foreign-flag vessels, or designate available U.S.-flag vessels, if the Contractor or a subcontractor believes that--

(1) U.S.-flag vessels are not available for timely shipment;

(2) The freight charges are inordinately excessive or unreasonable; or

(3) Freight charges are higher than charges to private persons for transportation of like goods.

(c) The Contractor must submit any request for use of other than U.S.-flag vessels in writing to the Contracting Officer at least 45 days prior to the sailing date necessary to meet its delivery schedules. The Contracting Officer will process requests submitted after such date(s) as expeditiously as possible, but the Contracting Officer's failure to grant approvals to meet the shipper's sailing date will not of itself constitute a compensable delay under this or any other clause of this contract. Requests shall contain at a minimum--

(1) Type, weight, and cube of cargo;

(2) Required shipping date;

(3) Special handling and discharge requirements;

(4) Loading and discharge points;

(5) Name of shipper and consignee;

(6) Prime contract number; and

(7) A documented description of efforts made to secure U.S.-flag vessels, including points of contact (with names and telephone numbers) with at least two U.S.-flag carriers contacted. Copies of telephone notes, telegraphic and facsimile message or letters will be sufficient for this purpose.

(d) The Contractor shall, within 30 days after each shipment covered by this clause, provide the Contracting Officer and the Division of National Cargo, Office of Market Development, Maritime Administration, U.S. Department of Transportation, Washington, DC 20590, one copy of the rated on board vessel operating carrier's ocean bill of lading, which shall contain the following information--

(1) Prime contract number;

(2) Name of vessel;

(3) Vessel flag of registry;

(4) Date of loading;

(5) Port of loading;

(6) Port of final discharge;

(7) Description of commodity;

(8) Gross weight in pounds and cubic feet if available;

(9) Total ocean freight in U.S. dollars; and

(10) Name of the steamship company.

(e) The Contractor agrees to provide with its final invoice under this contract a representation that to the best of its knowledge and belief--

(1) No ocean transportation was used in the performance of this contract;

(2) Ocean transportation was used and only U.S.-flag vessels were used for all ocean shipments under the contract;

(3) Ocean transportation was used, and the Contractor had the written consent of the Contracting Officer for all non-U.S.-flag ocean transportation; or

(4) Ocean transportation was used and some or all of the shipments were

made on non-U.S.-flag vessels without the written consent of the Contracting Officer. The Contractor shall describe these shipments in the following format:

	Item Description	Contract Line Items	Quantity
Total.....			

(f) If the final invoice does not include the required representation, the Government will reject and return it to the Contractor as an improper invoice for the purposes of the Prompt Payment clause of this contract. In the event there has been unauthorized use of non-U.S.-flag vessels in the performance of this contract, the Contracting Officer is entitled to equitably adjust the contract, based on the unauthorized use.

(g) The Contractor shall include this clause, including this paragraph (g) in all subcontracts under this contract, which exceed the simplified acquisition threshold in Part 13 of the Federal Acquisition Regulation.

(End of clause)

99 52.247-7024 NOTIFICATION OF TRANSPORTATION OF SUPPLIES BY SEA (NOV 1995)

(a) The Contractor has indicated by the response to the solicitation provision, Representation of Extent of Transportation by Sea, that it did not anticipate transporting by sea any supplies. If, however, after the award of this contract, the Contractor learns that supplies, as defined in the Transportation of Supplies by Sea clause of this contract, will be transported by sea, the Contractor--

(1) Shall notify the Contracting Officer of that fact; and

(2) Hereby agrees to comply with all the terms and conditions of the Transportation of Supplies by Sea clause of this contract.

(b) The Contractor shall include this clause, including this paragraph (b), revised as necessary to reflect the relationship of the contracting parties, in all subcontracts hereunder, except (effective May 1, 1996) subcontracts for the acquisition of commercial items or components.

(End of clause)

100 52.0-4513 EQUIPMENT OWNERSHIP AND OPERATING EXPENSE SCHEDULE (EFARS 52.231-5000) (MAR 1995)

(a) This clause does not apply to terminations. See 52.249-5000, Basis for Settlement of Proposals, and FAR Part 49.

(b) Allowable cost for construction and marine plant and equipment in sound workable condition owned or controlled and furnished by a Contractor or subcontractor at any tier shall be based on actual cost data for each piece of equipment or groups of similar serial and series for which the Government can determine both ownership and operating costs from the Contractor's accounting records. When both ownership and operating costs cannot be determined for any piece of equipment or groups of similar serial or series

equipment from the Contractor's accounting records, costs for that equipment shall be based upon the applicable provisions for the applicable provisions of EP 1110-1-8, "Construction Equipment Ownership and Operating Expense Schedule." Region VI. Working conditions shall be considered to be average for determining equipment rates using the schedule unless specified otherwise by the Contracting Officer. For equipment not included in the schedule, rates for comparable pieces of equipment may be used or a rate may be developed using the formula provided in the schedule. For forward pricing, the Schedule in effect at the time of negotiations shall apply. For retroactive pricing, the Schedule in effect at the time the work was performed shall apply.

(c) Equipment rental costs are allowable, subject to the provision of FAR 31.105(d)(ii) and FAR 31.205-36. Rates for equipment rented from an organization under common control, lease-purchase arrangements, and sale-leaseback arrangements will be determined using the schedule except that actual rates will be used for equipment leased from an organization under common control that has an established practice of leasing the same or similar equipment to unaffiliated lessees.

(d) When actual equipment costs are proposed and the total amount of the pricing action exceeds the small purchase threshold, the contracting officer shall request the contractor to submit either certified cost or pricing data, or partial/limited data, as appropriate.

END OF SECTION 00700

TABLE OF CONTENTS
SECTION 00800
SPECIAL CONTRACT REQUIREMENTS

1	52.211-12	LIQUIDATED DAMAGES--CONSTRUCTION (APR 1984)
2	52.211-13	TIME EXTENSIONS (APR 1984)
3	52.236-1	PERFORMANCE OF WORK BY THE CONTRACTOR (APR 1984)
4	52.246-21	WARRANTY OF CONSTRUCTION (MAR 1994)
5	52.236-7001	CONTRACT DRAWINGS, MAPS, AND SPECIFICATIONS (DEC 1991)
6	52.0-4001	CONTRACTING OFFICER
7	52.0-4002	WAGE RATES
8	52.0-4020	TIME EXTENSIONS FOR UNUSUALLY SEVERE WEATHER (OCT 89) (ER 415-1-15)
9	52.0-4021	INCLUSION OF LABOR PROVISIONS IN SUBCONTRACTS (19 JUN 84) (DAEN-CCL LTR)
10	52.0-4022	REQUIRED INSURANCE (APR 1984) (FAR 28.307-2)
11	52.0-4030	BASIS FOR SETTLEMENT OF PROPOSALS (EFARS 52.249-5000) (MAR 1995)
12	52.0-4050	TURFING WORK
13	52.0-4056	PARTNERING AGREEMENT
14	52.0-4071	COMMENCEMENT, PROSECUTION, AND COMPLETION OF WORK (APR 1984) FAR 52.0211-0010
15	52.0-4220	PAYMENT FOR MATERIALS DELIVERED OFF-SITE (EFARS 52.232-5000) (MAR 1995)

SECTION 00800

SPECIAL CONTRACT REQUIREMENTS

1 52.211-12 LIQUIDATED DAMAGES--CONSTRUCTION (APR 1984)

(a) If the Contractor fails to complete the work within the time specified in the contract, or any extension, the Contractor shall pay to the Government as liquidated damages, the sum of $354 for each day of delay.

(b) If the Government terminates the Contractor's right to proceed, the resulting damage will consist of liquidated damages until such reasonable time as may be required for final completion of the work together with any increased costs occasioned the Government in completing the work.

(c) If the Government does not terminate the Contractor's right to proceed, the resulting damage will consist of liquidated damages until the work is completed or accepted.

(End of clause)

2 52.211-13 TIME EXTENSIONS (APR 1984)

Notwithstanding any other provisions of this contract, it is mutually understood that the time extensions for changes in the work will depend upon the extent, if any, by which the changes cause delay in the completion of the various elements of construction. The change order granting the time extension may provide that the contract completion date will be extended only for those specific elements so delayed and that the remaining contract completion dates for all other portions of the work will not be altered and may further provide for an equitable readjustment of liquidated damages under the new completion schedule.

(End of clause)

3 52.236-1 PERFORMANCE OF WORK BY THE CONTRACTOR (APR 1984)

The Contractor shall perform on the site, and with its own organization, work equivalent to at least twenty-five (25%) percent of the total amount of work to be performed under the contract. This percentage may be reduced by a supplemental agreement to this contract if, during performing the work, the Contractor requests a reduction and the Contracting Officer determines that the reduction would be to the advantage of the Government.

(End of clause)

(R 7-603.15 1965 JAN)

(R 1-18.104)

4 52.246-21 WARRANTY OF CONSTRUCTION (MAR 1994)

(a) In addition to any other warranties in this contract, the Contractor warrants, except as provided in paragraph (i) of this clause, that work performed under this contract conforms to the contract requirements and is

free of any defect in equipment, material, or design furnished, or workmanship performed by the Contractor or any subcontractor or supplier at any tier.

(b) This warranty shall continue for a period of 1 year from the date of final acceptance of the work. If the Government takes possession of any part of the work before final acceptance, this warranty shall continue for a period of 1 year from the date the Government takes possession.

(c) The Contractor shall remedy at the Contractor's expense any failure to conform, or any defect. In addition, the Contractor shall remedy at the Contractor's expense any damage to Government-owned or controlled real or personal property, when that damage is the result of--

(1) The Contractor's failure to conform to contract requirements; or

(2) Any defect of equipment, material, workmanship, or design furnished.

(d) The Contractor shall restore any work damaged in fulfilling the terms and conditions of this clause. The Contractor's warranty with respect to work repaired or replaced will run for 1 year from the date of repair or replacement.

(e) The Contracting Officer shall notify the Contractor, in writing, within a reasonable time after the discovery of any failure, defect, or damage.

(f) If the Contractor fails to remedy any failure, defect, or damage within a reasonable time after receipt of notice, the Government shall have the right to replace, repair, or otherwise remedy the failure, defect, or damage at the Contractor's expense.

(g) With respect to all warranties, express or implied, from subcontractors, manufacturers, or suppliers for work performed and materials furnished under this contract, the Contractor shall--

(1) Obtain all warranties that would be given in normal commercial practice;

(2) Require all warranties to be executed, in writing, for the benefit of the Government, if directed by the Contracting Officer; and

(3) Enforce all warranties for the benefit of the Government, if directed by the Contracting Officer.

(h) In the event the Contractor's warranty under paragraph (b) of this clause has expired, the Government may bring suit at its expense to enforce a subcontractor's, manufacturer's, or supplier's warranty.

(i) Unless a defect is caused by the negligence of the Contractor or subcontractor or supplier at any tier, the Contractor shall not be liable for the repair of any defects of material or design furnished by the Government nor for the repair of any damage that results from any defect in Government-furnished material or design.

(j) This warranty shall not limit the Government's rights under the Inspection and Acceptance clause of this contract with respect to latent defects, gross mistakes, or fraud.

(End of clause)

(R 7-604.4 1976 JUL)

5 52.236-7001 CONTRACT DRAWINGS, MAPS, AND SPECIFICATIONS (DEC 1991)

(a) The Government--

(1) Will provide the Contractor, without charge, ten (10) sets (five unless otherwise specified) of large-scale contract drawings and specifications except publications incorporated into the technical provisions by reference;

(2) Will furnish additional sets on request, for the cost of reproduction; and

(3) May, at its option, furnish the Contractor one set of reproducibles, or half-size drawings, in lieu of the drawings in paragraph (a)(1) of this clause.

(b) The Contractor shall--

(1) Check all drawings furnished immediately upon receipt;

(2) Compare all drawings and verify the figures before laying out the work;

(3) Promptly notify the Contracting Officer of any discrepancies; and

(4) Be responsible for any errors which might have been avoided by complying with this paragraph (b).

(c) Large scale drawings shall, in general, govern small scale drawings. Figures marked on drawings shall, in general, be followed in preference to scale measurements.

(d) Omissions from the drawings or specifications or the misdescription of details of work which are manifestly necessary to carry out the intent of the drawings and specifications, or which are customarily performed, shall not relieve the Contractor from performing such omitted or misdescribed details of the work, but shall be performed as if fully and correctly set forth and described in the drawings and specifications.

(e) The work shall conform to the specifications and the contract drawings identified on the following index of drawings:

Title	File and Drawing No.
Two Company Satellite Fire Station Fort Sill, OK	Index

(End of clause)

6 52.0-4001 CONTRACTING OFFICER

The Contracting Officer signing this contract is the primary Contracting Officer on this contract. However, any Contracting Officer assigned to the Tulsa District and acting within his authority may take formal action on this contract when a contract action needs to be taken and the primary Contracting Officer is away from the office.

7 52.0-4002 WAGE RATES

The following Wage Determination No.(s) are attached and made a part hereof: Wage Determination OK980014, Mod. No. 2, dated 03/27/1998

8 52.0-4020 TIME EXTENSIONS FOR UNUSUALLY SEVERE WEATHER (OCT 89) (ER 415-1-15)

1. This provision specifies the procedure for determination of time extensions for unusually severe weather in accordance with the contract clause entitled "Default: (Fixed Price Construction)". In order for the Contracting Officer to award a time extension under this clause, the following conditions must be satisfied:

a. The weather experienced at the project site during the contract period must be found to be unusually severe, that is, more severe than the adverse weather anticipated for the project location during any given month.

b. The unusually severe weather must actually cause a delay to the completion of the project. The delay must be beyond the control and without the fault or negligence of the contractor.

2. The following schedule of monthly anticipated adverse weather delays is based on National Oceanic and Atmospheric Administration (NOAA) or similar data for the project location and will constitute the base line for monthly weather time evaluations. The contractor's progress schedule must reflect these anticipated adverse weather delays in all weather dependent activities.

MONTHLY ANTICIPATED ADVERSE WEATHER DELAY
WORK DAYS BASED ON (5) DAY WORK WEEK

JAN	FEB	MAR	APR	MAY	JUN	JUL	AUG	SEP	OCT	NOV	DEC
2	2	3	3	4	4	3	3	3	3	1	2

3. Upon acknowledgment of the Notice to Proceed (NTP) and continuing throughout the contract, the contractor will record on the daily CQC report, the occurrence of adverse weather and resultant impact to normally scheduled work. Actual adverse weather delay days must prevent work on critical activities for 50 percent or more of the contractor's scheduled work day. The number of actual adverse weather delay days shall include days impacted by actual adverse weather (even if adverse weather occurred in previous month), be calculated chronologically from the first to the last day of each month, and be recorded as full days. If the number of actual adverse weather delay days exceeds the number of days anticipated in paragraph 2, above, the contracting officer will convert any qualifying delays to calendar days, giving full consideration for equivalent fair weather work days, and issue a modification in accordance with the contract clause entitled "Default (Fixed Price Construction)".

(End of Clause)

9 52.0-4021 INCLUSION OF LABOR PROVISIONS IN SUBCONTRACTS (19 JUN 84) (DAEN-CCL LTR)

To show compliance with CONTRACT CLAUSE entitled "Subcontracts," The Contractor should, within 7 days after award of any subcontract either by himself or a subcontractor or any tier, deliver to the Contracting Officer a completed Standard Form 1413. Nothing contained in this clause

or any other provision of this contract shall create any contractual relation between any subcontractor and the Government.

(End of Clause)

10 52.0-4022 REQUIRED INSURANCE (APR 1984) (FAR 28.307-2)

Pursuant to the Contract Clause entitled "Insurance Work on a Government Installation", the Contractor shall procure and maintain during the entire period of his performance under this contract the following minimum insurance.

(a) Workmen's Compensation and Employers' Liability Insurance in compliance with applicable state statutes, with a minimum employers' liability coverage of $100,000.

(b) Comprehensive General Liability Insurance for bodily injury in the minimum limits of $500,000 per occurrence. No property damage liability insurance is required.

(c) Comprehensive Automobile Liability Insurance covering the operation of all automobiles used in connection with the performance of the contract in the minimum limits of $200,000 per person and $500,000 per occurrence for bodily injury and $25,000 per occurrence for property damage.

The Contractor agrees to insert the substance of this clause, including this paragraph, in all subcontracts hereunder.

(End of Clause)

11 52.0-4030 BASIS FOR SETTLEMENT OF PROPOSALS (EFARS 52.249-5000) (MAR 1995)

"Actual costs will be used to determine equipment cost for a settlement proposal submitted on the total cost basis under FAR 49.206-2b. In evaluating a termination settlement proposal using the total cost basis, the following principles will be applied to determine allowable equipment costs:

(1) Actual costs for each piece of equipment, or groups of similar serial or series equipment, need not be available in the contractor's accounting records to determine total actual equipment costs.

(2) If equipment costs have been allocated to a contract using predetermined rates, those charges will be adjusted to actual costs.

(3) Recorded job costs adjusted for unallowable and unallocable expenses will be used to determine equipment operating expenses.

(4) Ownership costs (depreciation) will be determined using the contractor's depreciation schedule (subject to the provisions of FAR 31.205-11).

(5) License, taxes, storage and insurance costs are normally recovered as an indirect expense and unless the contractor charges these costs directly to contracts, they will be recovered through the indirect expense rate."

(End of Clause)

12 52.0-4050 TURFING WORK

(1) The Contractor shall complete turfing work within the time limits specified in Section: TURF with final completion not later than the first planting season following project completion stated in the clause entitled COMMENCEMENT, PROSECUTION, AND COMPLETION OF WORK.

(2) If the Contractor fails to complete the turfing work within the time specified, or any extension of time, the Contractor shall pay to the Government, as liquidated damages, the sum of $100 for each day of delay in completing turfing.

(End of Clause)

13 52.0-4056 PARTNERING AGREEMENT

Tulsa District is an avid supporter and believer in the benefits of Partnering on our projects. Partnering is a necessary and valuable method of establishing mutual goals and working relationships among project participants, drawing on the strengths of each. As a result, the Contracting Officer or his/her representative will contact the contractor's management after contract award to discuss partnering for this project. Partnering opportunities will be explored and degree of partnering will be discussed. Hopefully, a partnering relationship will be implemented. The Partnering relationship will not be legally binding, but will represent a commitment to work together toward common goals.

The Contractor should not include any anticipated costs for partnering in the bid or proposal. The Partnering relationship will be bilateral and participation will be voluntary. The contractor is urged to consider Partnering as a means of promoting cooperation to the advantage of the contractor and the Government.

14 52.0-4071 COMMENCEMENT, PROSECUTION, AND COMPLETION OF WORK (APR 1984) FAR 52.0211-0010

The Contractor shall be required to (a) commence work under this contract within 10 calendar days after the date the Contractor receives the notice to proceed, (b) prosecute the work diligently, and (c) complete the entire work ready for use not later than 258 calendar days. The time stated for completion shall include final cleanup of the premises.

15 52.0-4220 PAYMENT FOR MATERIALS DELIVERED OFF-SITE (EFARS 52.232-5000) (MAR 1995)

(a) Pursuant to FAR clause 52.232-5, Payments Under Fixed Priced Construction Contracts, materials delivered to the Contractor at locations other than the site of the work may be taken into consideration in making payment if included in payment estimates and if all the conditions of the

General Provisions are fulfilled. Payment for items delivered to locations other than the work site will be limited to: (1) materials required by the technical provisions; or (2) materials that have been fabricated to the point where they are identifiable to an item of work required under this contract.

(b) Such payment will be made only after receipt of paid or receipted invoices or invoices with canceled check showing title to the items in the prime contractor and including the value of material and labor incorporated into the item. In addition to petroleum products, payment for materials delivered off-site is limited to the following items: those items meeting the requirements of subparagraph (a) above.

END OF SECTION 00800

GENERAL DECISION OK980014 03/27/98 OK14
Superseded General Decision No. OK970014

State: Oklahoma

Construction Type:
BUILDING

County(ies):

ALFALFA	GRADY	MAJOR
BECKHAM	GRANT	MARSHALL
BLAINE	GREER	MURRAY
CADDO	HARMON	NOBLE
CARTER	HARPER	PONTOTOC
COMANCHE	JACKSON	ROGER MILLS
COTTON	JEFFERSON	STEPHENS
CUSTER	JOHNSTON	TILLMAN
DEWEY	KAY	WASHITA
ELLIS	KINGFISHER	WOODS
GARFIELD	KIOWA	WOODWARD
GARVIN	LOVE	

BUILDING CONSTRUCTION PROJECTS (does not include residential construction consisting of single family homes and apartments up to and including 4 stories)

Modification Number	Publication Date
0	02/13/1998
1	03/13/1998
2	03/27/1998

INVITATION NO. DCA56-98-B-0017 TWO COMPANY SATELLITE FIRE STATION, FT SILL, COMANCHE COUNTY, OKLAHOMA

ASBE0064C 07/16/1997

	Rates	Fringes
KAY COUNTY		
ASBESTOS/INSULATOR WORKERS	15.00	4.64

SCOPE OF WORK:
Includes application of all insulating materials, protective coverings, coatings and finishings to all types of mechanical systems.

ASBE0066C 07/01/1996

	Rates	Fringes
BECKHAM, ELLIS, GREER, HARMON, HARPER AND ROGER MILLS COUNTIES		
ASBESTOS/INSULATOR WORKERS	15.13	4.24

Scope of Work:
Includes application of all insulation materials, protective coverings, coatings and finishings to all types of mechanical systems.

ASBE0094C 07/16/1997

	Rates	Fringes
REMAINING COUNTIES		
ASBESTOS/INSULATOR WORKERS	18.59	5.54

SCOPE OF WORK:
Includes application of all insulation materials, protective coverings and finishings to all types of mechanical systems.

BOIL0592A 08/08/1996

	Rates	Fringes
BOILERMAKER	18.48	5.54

BROK0005Q 06/01/1995

	Rates	Fringes
BECKHAM, CADDO, CARTER, COMANCHE, COTTON, CUSTER, DEWEY, GARVIN, GRADY, GREER, HARMON, JACKSON, JEFFERSON, JOHNSTON, KIOWA, LOVE, MARSHALL, PONTOTOC, ROGER MILLS, STEPHENS, TILLMAN AND WASHITA COUNTIES		
BRICKLAYERS & STONEMASONS	15.85	3.03

BROK0005R 06/01/1995

	Rates	Fringes
ALFALFA, BLAINE, ELLIS, GARFIELD, GRANT, HARPER, KINGFISHER, MAJOR, WOODS AND WOODWARD COUNTIES		
BRICKLAYERS & STONEMASONS	16.47	2.83

BROK0005S 06/01/1995

	Rates	Fringes
KAY AND NOBLE COUNTIES		
BRICKLAYERS & STONEMASONS	15.95	3.05

CARP0329G 06/01/1997

	Rates	Fringes
BECKHAM, BLAINE, CADDO, COMANCHE, COTTON, DEWEY, GARVIN (Remainder of County), GRADY, GREER, HARMON, JACKSON, JEFFERSON, KINGFISHER (South of the Cimmarron River), KIOWA, STEPHENS, TILLMAN AND WASHITA COUNTIES		

CARPENTERS & POWER SAW
 OPERATORS 15.50 2.80
MILLWRIGHTS & PILEDRIVERMEN 16.90 2.80

CARP1362C 01/01/1995

	Rates	Fringes
CARTER, GARVIN (Northern half of Garvin including the Towns of Pauls Valley and Wynnwood), JOHNSTON, LOVE, MARSHALL, MURRAY AND PONTOTOC COUNTIES		
CARPENTERS	13.40	2.85
PILEDRIVERMEN	13.65	2.85
MILLWRIGHTS	15.50	2.85

CARP1686D 06/11/1994

	Rates	Fringes
NOBLE COUNTY (East of Interstate #35 and South of Black Bear Creek)		
CARPENTERS	14.40	.80
MILLWRIGHTS	15.05	.80
PILEDRIVERMEN	14.40	.80
POWER SAW OPERATOR	14.40	.80

CARP1894A 06/01/1993

	Rates	Fringes
ELLIS, HARPER, ROGER MILLS, WOODS AND WOODWARD COUNTIES		
CARPENTERS	11.55	1.40
MILLWRIGHTS	12.425	1.40
PILEDRIVERMEN	12.425	1.40
POWER SAW OPERATOR	11.85	1.40

CARP2008A 06/01/1994

	Rates	Fringes
ALFALFA, GARFIELD, GRANT, KAY, MAJOR, NOBLE (West of Interstate # 35 and North of Black Bear Creek) COUNTIES		
CARPENTERS, MILLWRIGHTS AND PILEDRIVERMEN	12.30	.30

CARP2008B 06/01/1994

	Rates	Fringes
ALFALFA, GARFIELD, GRANT AND MAJOR COUNTIES		
LATHERS	12.30	.30

ELEC0059G 06/01/1997

	Rates	Fringes
MARSHALL COUNTY		
ELECTRICIANS	18.50	2.20+10%

ELEC0444B 12/01/1995

	Rates	Fringes
KAY AND NOBLE COUNTIES		
ELECTRICIANS	17.65	4.05+3.5%

---

* ELEC0590A 01/01/1998

	Rates	Fringes
COMANCHE, COTTON, GREER, HARMON, JACKSON, JEFFERSON, KIOWA, STEPHENS AND TILLMAN		

ELECTRICIANS	16.45	3.80+3.5%

ELEC1002B 07/01/1996

	Rates	Fringes
LINE CONSTRUCTION:		
Lineman	21.53	2.00+16-1/4%
Cable Splicer	23.25	2.00+16-1/4%
Hole Digger, Heavy Equipment Op., (Pole Cat Equivalent)	19.16	2.00+16-1/4%
Powderman	18.52	2.00+16-1/4%
1.75+9%		
Line Truck Driver (Winch op.)	16.79	2.00+16-1/4%
Truck Driver (Flat Bed, Ton & 1/2) and Under)	14.43	2.00+16-1/4%
Jackhammer Op.	15.07	2.00+16-1/4%
Groundman	13.56	2.00+16-1/4%

---

* ELEC1141E 12/01/1997

	Rates	Fringes
ALFALFA, BECKHAM, BLAINE, CADDO, CARTER, CUSTER, DEWEY, ELLIS, GARFIELD, GARVIN, GRADY, GRANT, HARPER, JOHNSON, KINGFISHER, LOVE, MAJOR, MURRY, PONTOTOC, ROGER MILLS, WASHITA, WOODS AND WOODWARD COUNTIES		
ELECTRICIANS	18.57	10-1/4%+2.50

ELEC1141G 09/01/1993

	Rates	Fringes
ALFALFA, BECKHAM, BLAINE, CADDO, CARTER, CUSTER, DEWEY, ELLIS, GARFIELD, GARVIN, GRADY, GRANT, HARPER, JOHNSON, KINGFISHER, LOVE, MAJOR, MURRAY, PONTOTOC, ROGER MILLS, WASHITA, WOODS AND WOODWARD COUNTIES		
ELECTRICIANS:		
Sound & Communication Technicians	14.25	4%

---

* ELEV0063C 04/01/1996

	Rates	Fringes
ELEVATOR CONSTRUCTORS:		
Mechanic	17.90	6.12+a

FOOTNOTE:

a. Paid Holidays: New Year's Day; Memorial Day; July 4th; Labor Day; Thanksgiving Day; Friday after Thanksgiving Day; Christmas Day., Vacation Pay Credit: Employer contributes 8% of the basic hourly rate for employees with 5 years or more of service or 6% of the basic hourly rate for employees with 6 months to 5 years of service.

ENGI0627I 06/01/1995

	Rates	Fringes
POWER EQUIPMENT OPERATORS:		
GROUP 1:	17.80	4.85
GROUP 2:	17.30	4.85
GROUP 3:	16.80	4.85
GROUP 4:	16.55	4.85
GROUP 5:	15.05	4.85

GROUP 6:	15.80	4.85
GROUP 7:	15.40	4.85
GROUP 8:	13.80	4.85
GROUP 9:	13.30	4.85
GROUP 10:	12.80	4.85

GROUP 1: All crane type equipment with at least 300 feet of boom and over (including jib)

GROUP 2: All crane type equipment with at least 200 feet and less than 300 feet of boom (including jub)

GROUP 3: All crane type equipment with at least 100 feet and less than 200 feet of boom (including jib); all tower cranes; crane equipment (as rated by mfg.) 3 cu. yd. and over; guy derrick; whirley; power driven hole digger (with 30 feet and longer mast)

GROUP 4: Cranes with less than 100 feet of boom with jib and cranes (as rated by mfg.) less than 3 cu. yd.; heavy duty mechanic; overhead monorail type crane; panel board batch plant op.; piledriver engineer; dragline; clamshell; backhoe (3/4 yd. and over); sideboom or similar type equipment; gradall; cherry picker; hoist (while operating two or more drums); all hoist (while doing stack and chimmey work); power driven hole digger with less than 30 ft. mast; motor patrol (boom type)

GROUP 5: Dozer (engine r.p. 65 or over); roller and compactors with dozer blade; backhoe under 3/4 yd., all scraper type equipment; water wagons under the jurisdiction of this craft; loader of hi-lift (engine h.p. 65 or over); asphalt laying machine; conveyor-multiple, panel board central; trenching machine; concrete pump (boom type)

GROUP 6: Rollers, all types; oil distributor; pulvimixer; screed operator; concrete pump (trailer type); rotary drilling machine when operated from console; greaser; tilt top trailer operator.

GROUP 7: Greaser; tilt top trailer operator

GROUP 8: Locomotive engineer; boring machine; tug boat; mixer - 18 cu. ft. and over; sand barge; dredging machine; tugger; hoist (operating one drum); air compressor - 3 to 6 - size 500 cu. ft. and under; air compressor - over 500 cu. ft. (1); pump, battery - 3 to 6; all fork-lift, bobcat and similar equipment; generator plant engineer, diesel elect; winch truck with A frame; concrete buster buster or tamper; heater under jurisdiction of operating engineers; fireman; boiler operator; crushing plants; farm tractor with or without attachments; batch plant opperator - (portable); conveyor operator - continuous belt bulking handling; form grader; screening plant; well point pump operator; signal man on whirley when and if required; outside, side elevator or construction type hoist personel.

GROUP 9: Concrete mixers, less than 18 cu. ft.; air compressor, 500 cu. ft. and under (1 or 2); fuelman; asphalt lay machine backend man.

GROUP 10: Truck crane oiler and driver; crane oiler; permanent building type elevator operator.

IRON0048B 06/01/1997

	Rates	Fringes
BLAINE, CADDO, CARTER, COMANCHE, CUSTER, DEWEY, GARFIELD, GARVIN, GRADY, JOHNSTON, KINGFISHER, KIOWA, MAJOR, MURRAY, NOBLE, PONTOTOC, ROGER MILLS, STEPHENS, WASHITA AND WOODWARD COUNTIES		
IRONWORKERS	16.00	6.57

IRON0263F 06/01/1997

	Rates	Fringes
MARSHALL COUNTY		
IRONWORKERS	15.00	3.75

IRON0263G 12/01/1997

	Rates	Fringes
BECKHAM, COTTON, ELLIS, GREER, HARMON, HARPER, JACKSON JEFFERSON, LOVE AND TILLMAN COUNTIES		
IRONWORKERS	14.59	3.75

IRON0584H 06/01/1997

	Rates	Fringes
KAY COUNTY (The southern portion to a line running east and west at the South City limits of Ponca City),		
IRONWORKERS	16.00	6.57

IRON0606D 06/01/1997

	Rates	Fringes
ALFALFA, GRANT, KAY (Remainder of County), AND WOODS COUNTIES		
IRONWORKERS	14.95	4.94

---

* LABO0462C 06/01/1993

	Rates	Fringes
JOHNSTON, KAY, NOBILE AND PONTOTOC COUNTIES		
LABORERS:		
GROUP 1	8.00	1.31
GROUP 2	8.50	1.31
ALFALFA, BECKHAM, BLAINE, CADDO, CARTER, COMANCHE, COTTON, CUSTER, DEWEY, ELLIS, GARFIELD, GARVIN, GRADY, GRANT, GREER, HARMON, HARPER, JACKSON, JEFFERSON, KINGFISHER, KIOWA, LOVE, MAJOR, MARSHALL, MURRAY, ROGER MILLS, STEPHENS, TILLMAN, WASHITA, WOODS AND WOODWARD COUNTIES		
LABORERS:		
GROUP 1	7.50	1.31
GROUP 2	8.00	1.31

LABORER CLASSIFICATION

GROUP 1 - All digging and dirt work; Firing of salamanders and portable space heaters; All loading and unloading ofthe materials and equipment to and from hoist or cages for stock piling only; Wheeling and placing of concrete; Handling of lumber, steel, cement and distribution of materials; All cleaning including windows; All wrecking and razing of buildings and all structures; Cleaning and clearing of derbis; Loading and unloading of

materials, hoist or cages, except when the man is directly tending lathers, masons or plasterers; Water boys when used; Carpenters tenders.

GROUP 2 - All machine tool operators that come under the juris diction of the laborers; All sewer and draintile layers and handling at the ditch, excluding distribution; Operators of water pumps up to four inches and slip form jackets; All men erecting scaffolds and directly tending lathers, masons, cement masons and plasterers, Mortar mixers, hod carriers and dry mixers; High work over 30 feet from ground or floors; Cement finisher tender; Work on swinging scaffold; All kettle and pot men; Tank cleaning; All pipe doping, treating and wrapping including all men working with dope; Mortar and plaster mixing machine pumpcrete machine and gunite mixing machines; including placing of concrete; Handling creosoted or treated materials liquid acid or like materials when injurious to health, eyes, skin or clothes; All newly developed mechanical equipment which replaces wheelbarrows or buggies previously used by loaders; All scale men on batch plants and tool crib men; All laborers screening sand, running sand drier and feeding operating sand blaster, except nozzle; Flaggers; Concrete graders and cutting torch operators in connection with laborers' work.

PAIN0650B 05/15/1993

	Rates	Fringes
CARTER, COMANCHE, COTTON, GREER, HARMON, JACKSON, JEFFERSON, JOHNSTON, KIOWA, LOVE, MARSHALL, PONTOTOC, STEPHENS AND TILLMAN COUNTIES		
PAINTERS:		
BRUSH & ROLLER	9.90	1.03
BRUSH & ROLLER (STRL. STEEL)	10.15	1.03
SPRAY	10.55	1.03
SWING STAGE, BOSUN CHAIR)	10.15	1.03
TAPING & BEDDING (HAND TOOLS)	10.20	1.03
SANDBLASTING	10.25	1.03

PAIN0807A 05/01/1997

	Rates	Fringes
REMAINING COUNTIES		
PAINTERS:		
Brush & Roller	13.55	2.53
Spray under 30 ft.	14.05	2.53
Spray over 30 ft.	14.55	2.53
Paper Hanging	14.55	2.53
Tapers using machine tools	14.05	2.53

PLAS0690B 06/01/1985

	Rates	Fringes
JOHNSTON AND MARSHALL COUNTIES		
CEMENT MASONS	13.70	.76

PLAS0786A 06/01/1993

	Rates	Fringes
KAY COUNTY		
CEMENT MASONS	10.80	
POWER TOOL OP.	11.05	

PLAS0807A 06/01/1990

	Rates	Fringes
ALFALFA, BECKHAM, BLAINE, CADDO, CARTER, COMANCHE, COTTON, CUSTER, DEWEY, ELLIS, GARFIELD, GARVIN, GRADY, GRANT, GREER, HARMON, HARPER, JACKSON, JEFFERSON, JOHNSTON, KINGFISHER, KIOWA, LOVE, MAJOR, MARSHALL, MURRAY, NOBLE, ROGER MILLS, STEPHENS, TILLMAN, WASHITA, WOODS AND WOODWARD COUNTIES		
PLASTERERS	15.60	.95

PLUM0344F 07/01/1997

	Rates	Fringes
REMAINING COUNTIES		
PLUMBERS, PIPEFITTERS	19.00	5.55

---

* PLUM0767D 07/01/1997

	Rates	Fringes
KAY COUNTY		
PLUMBERS, PIPEFITTERS	18.03	5.60

ROOF0143A 12/01/1997

	Rates	Fringes
ROOFERS	14.05	3.05

SHEE0124A 01/01/1998

	Rates	Fringes
SHEET METAL WORKERS		
(Including Duct Work)	19.14	4.92

TEAM0516A 06/01/1993

	Rates	Fringes
MARSHALL COUNTY:		
TRUCK DRIVERS:		
GROUP 1:	10.43	
GROUP 2:	10.53	
GROUP 3:	10.63	
GROUP 4:	10.58	
GROUP 5:	10.73	

TRUCK DRIVER CLASSIFICATIONS

GROUP 1 - Pick-up, 1-1/2 tons or 2-1/2 yards and up to but not including 3 tons or 4 yards, such as dump trucks, flat beds, stake bodies and buses.

GROUP 2 - 3 tons or 4 yards and up to but not including 4 tons or 6 yards.

GROUP 3 - 5 tons or 6 yards and over including heavy equipment such as pole trucks, winch trucks, euclids, mississippi wagons, semi-dumps, turner pulls or other

heavy material moving equipment, tractor trailor drivers and similar equipment such as tractors, ten wheelers.

GROUP 4 - Ready mix concrete trucks up to but not including 3 yards and over.

GROUP 5 - Ready mix concrete truck 3 yards and over.

TEAM0523A 06/01/1993

	Rates	Fringes
KAY AND NOBLE COUNTIES		
TRUCK DRIVERS:		
GROUP 1:	12.80	
GROUP 2:	12.85	
GROUP 3:	12.95	

TRUCK DRIVER CLASSIFICATION

GROUP 1 - Truck Drivers, Including pick-up, 1- 1/2 tons to 2-1/2 yards up to but not including 3 tons or 4 yards, such as dump trucks, flat beds, stake body or bus driver.

GROUP 2 - 3 tons or 4 yards up to but not including 4 tons or 6 yards.

GROUP 3 - Ready mix concrete truck, tractor trailer and similar equipment.

TEAM0886A 06/01/1980

	Rates	Fringes
TRUCK DRIVERS:		
ALFALFA, BECKHAM, BLAINE, CADDO, CARTER, COMANCHE, COTTON, CUSTER, DEWEY, ELLIS, GARFIELD, GARVIN, GRADY, GRANT, GREER, HARMON, HARPER, JACKSON, JEFFERSON, JOHNSTON, KINGFISHER, KIOWA, LOGAN, LOVE, MAJOR, MURRAY, PONTOTOC, ROGER MILLS, STEPHENS, TILLMAN, WASHITA, WOOD AND WOODWARD COUNTIES.		
TRUCK DRIVERS:		
GROUP 1:	9.70	
GROUP 2:	9.40	

TRUCK DRIVER CLASSIFICATION

GROUP 1 - Truck Drivers for heavy equipment such as lowboys, heavy winch and floats, heavy earth moving equipment such as dump trucks and euclids.

GROUP 2 - Truck Drivers and swampers, such as dump trucks, flat beds, stakebodies and 3/4 and 1/2 ton pick-up trucks.

WELDERS - Receive rate prescribed for craft performing operation to which welding is incidental.

==========

Unlisted classifications needed for work not included within the scope of the classifications listed may be added after award only as provided in the labor standards contract clauses (29 CFR 5.5(a)(1)(v)).

In the listing above, the "SU" designation means that rates listed under that identifier do not reflect collectively bargained wage and fringe benefit rates. Other designations indicate unions whose rates have been determined to be prevailing.

WAGE DETERMINATION APPEALS PROCESS

1.) Has there been an initial decision in the matter? This can be:

* an existing published wage determination
* a survey underlying a wage determination
* a Wage and Hour Division letter setting forth a position on a wage determination matter
* a conformance (additional classification and rate) ruling

On survey related matters, initial contact, including requests for summaries of surveys, should be with the Wage and Hour Regional Office for the area in which the survey was conducted because those Regional Offices have responsibility for the Davis-Bacon survey program. If the response from this initial contact is not satisfactory, then the process described in 2.) and 3.) should be followed.

With regard to any other matter not yet ripe for the formal process described here, initial contact should be with the Branch of Construction Wage Determinations. Write to:

Branch of Construction Wage Determinations
Wage and Hour Division
U. S. Department of Labor
200 Constitution Avenue, N. W.
Washington, D. C. 20210

2.) If the answer to the question in 1.) is yes, then an interested party (those affected by the action) can request review and reconsideration from the Wage and Hour Administrator (See 29 CFR Part 1.8 and 29 CFR Part 7). Write to:

Wage and Hour Administrator
U.S. Department of Labor
200 Constitution Avenue, N. W.
Washington, D. C. 20210

The request should be accompanied by a full statement of the interested party's position and by any information (wage payment data, project description, area practice material, etc.) that the requestor considers relevant to the issue.

3.) If the decision of the Administrator is not favorable, an interested party may appeal directly to the Administrative Review Board (formerly the Wage Appeals Board). Write to:

Administrative Review Board
U. S. Department of Labor
200 Constitution Avenue, N. W.
Washington, D. C. 20210

4.) All decisions by the Administrative Review Board are final.

END OF GENERAL DECISION

SECTION 01040

COORDINATION, FIELD ENGINEERING, AND MEETINGS

PART 1 GENERAL

1.1 UTILITY OUTAGE COORDINATION

1.1.1 Approval

The Contractor shall obtain written permission/approval from the Contracting Officer 21 days prior to:

(1) Performing any work which will close any runway or street or interrupt any utility service.

(2) Making any excavation: Any damage to underground utilities, communication lines, etc, will be the responsibility of the Contractor if the approval is not obtained.

(3) Utility outages: The proposed outage request shall indicate the proposed work and length of outage.

1.1.2 Government Right to Delay

The Government reserves the right to postpone for 7 days, any scheduled outages. There shall be no outages when the outside temperature is expected to be below 35 degrees F.

1.1.3 Government Performance

Government personnel shall perform all shutting off and turning on of valves and switches necessary to accomplish scheduled outage.

1.2 LAYOUT OF WORK (APR 1984) (FAR 52.236-17)

The Contractor shall lay out his work from Government-established base lines and bench marks indicated on the drawings and shall be responsible for all measurements in connection with the layout. The Contractor shall furnish, at his own expense, all stakes, templates, platforms, equipment, tools, and materials and labor required to lay out any part of the work. The Contractor shall be responsible for executing the work to the lines and grades that may be established or indicated by the Contracting Officer. The Contractor shall also be responsible for maintaining and preserving all stakes and other marks established by the Contracting Officer until authorized to remove them. If such marks are destroyed by the Contractor or through his negligence before their removal is authorized, the Contracting Officer may replace them and deduct the expense of the replacement from any amounts due or to become due to the Contractor.

1.3 MONUMENT REPLACEMENT

1.3.1 General

Government-established horizontal and vertical control monuments that are shown on the drawings, if destroyed shall be reestablished by the Contractor in locations as directed by the Contracting Officer. Control points set by the Contractor for the purpose of reestablishing the

monuments and to properly control the work, if destroyed and not reset by the Contractor, shall be reestablished by the Government at the Contractor's expense. Survey shall be performed by a Registered Land Surveyor.

1.3.2 Horizontal Control

Horizontal control shall be based on the State Plane Coordinate System as developed by the National Geodetic Survey. Horizontal control shall originate and close on control points established by the Government.

1.3.3 Vertical Control

Elevations shall originate and close on vertical controls established by the Government. Third Order Accuracy or better shall be maintained for all vertical survey control. Vertical error shall be adjusted for all control markers established throughout each level loop. A transcript of all adjusted vertical marks set and adjusted horizontal marks set, shall be furnished on forms furnished by the Government. (SWD Form 598)

1.3.4 Survey Procedure

Standard ground survey methods necessary to obtain Third Order Accuracy standards shall be used. The standard 4-3/4- by 7-1/2-inch hardback fieldbook shall be used. The party setup, weather conditions, and date shall be entered at the top of the page for each workday. The original notebook shall be turned in at the completion of the work and shall become the property of the Government.

1.3.5 Monuments

Concrete monuments shall be set as control monuments, where required. The monuments shall consist of 6-inch -diameter concrete posts of standard mix and a Government-furnished bronze disk flush with top, set at least 2.6 feet into solid ground and 0.4 foot above the ground surface. A No. 4 18-inch reinforcing bar shall be cast in the top portion of the monument. Each monument shall be identified by stamping the bronze disk with steel dies, indicating thereon the name of the site and number of the monument. A Government-furnished galvanized U-channel rail steel delineator post, 6.5 feet in length with a USCE sign attached shall be set in concrete within 1 foot of each control monument. Markers which fall in roads or improved areas shall be either buried or a disk set flush in pavement, whichever may be appropriate to the situation. Control monuments shall be referenced by chain distance and angle to at least three objects, such as blazed trees, crosses in solid rock, or other physical features in the immediate vicinity.

1.4 ACCIDENT PREVENTION PREPLANNING (SWTCD)

In addition to the requirements of the CONTRACT CLAUSE entitled "Accident Prevention," the Contractor shall:

a. Meet with the Contracting Officer and/or his representative before each major phase of construction. The purpose of the meeting will be to identify the specific hazards that are associated with that phase of construction. The meeting will include the general Contractor's superintendent, Quality Control Inspector, and superintendent or foreman in charge of the operation whether performed by the general Contractor or subcontractor.

b. Identify at this meeting what construction methods and equipment will be used to protect the workmen against the hazards that are anticipated during that phase of construction. This plan, when agreed upon by the Contracting Officer and Contractor, will become a part of the Contractor's safety program.

c. Be responsible for insuring that all subcontractors are knowledgeable and follow the safety plan agreed upon by the Contractor and Contracting Officer.

PART 2 PRODUCTS (NOT APPLICABLE)

PART 3 EXECUTION (NOT APPLICABLE)

--End of Section--

-- End of Section --

SECTION 01090

SOURCES FOR REFERENCE PUBLICATIONS
09/97

1.1 REFERENCES

Various publications are referenced in other sections of the specifications to establish requirements for the work. These references are identified in each section by document number, date and title. The document number used in the citation is the number assigned by the sponsoring organization, e.g. UL 1 (1993; Rev thru Jan 1995) Flexible Metal Conduit. However, when the sponsoring organization has not assigned a number to a document, an identifying number has been assigned for convenience, e.g. UL's unnumbered 1995 edition of their Building Materials Directory is identified as UL-01 (1995) Building Materials Directory. The sponsoring organization number (UL 1) can be distinguished from an assigned identifying number (UL-01) by the lack of a dash mark (-) in the sponsoring organization assigned number.

1.2 ORDERING INFORMATION

The addresses of the organizations whose publications are referenced in other sections of these specifications are listed below, and if the source of the publications is different from the address of the sponsoring organization, that information is also provided. Documents listed in the specifications with numbers which were not assigned by the sponsoring organization should be ordered from the source by title rather than by number.

ACI INTERNATIONAL (ACI)
P.O. Box 9094
Farmington Hills, MI 48333-9094
Ph: 248-848-3700
Fax: 248-848-3701
Internet: http://www.aci-int.inter.net

AGRICULTURAL MARKETING SERVICE (AMS)
Seed Regulatory and Testing Branch
USDA, AMS, LS Div.
Room 209, Bldg. 306, BARC-East
Beltsville, MD 20705-2325
Ph: 301-504-9430
Fax: 301-504-5454 Internet: http://www.ams.usda.gov/lsg/ls-sd.htm
e-mail: james_p_triplitt@usda.gov

AIR CONDITIONING AND REFRIGERATION INSTITUTE (ARI)
4301 North Fairfax Dr., Suite 425
ATTN: Pubs Dept.
Arlington, VA 22203
Ph: 703-524-8800
Fax: 703-528-3816
E-mail: ari@dgsys.com
Internet: www.ari.org

AIR CONDITIONING CONTRACTORS OF AMERICA (ACCA)
1712 New Hampshire Avenue, NW
Washington, DC 20009
Ph: 202-483-9370
FAX: 202-234-4721

AIR DIFFUSION COUNCIL (ADC)
104 So. Michigan Ave., No. 1500
Chicago, IL 60603
Ph: 312-201-0101
Fax: 312-201-0214

AIR MOVEMENT AND CONTROL ASSOCIATION (AMCA)
30 W. University Dr.
Arlington Heights, IL 60004-1893
Ph: 708-394-0404
Fax: 708-253-0088

ALUMINUM ASSOCIATION (AA)
Pubs Department
P.O. Box 753
Waldorf, MD 20601
Ph: 301-645-0756
Fax: 301-843-0159

AMERICAN ARCHITECTURAL MANUFACTURERS ASSOCIATION (AAMA)
1827 Walden Ofc. Sq.
Suite 104
Schaumburg, IL 60173-4268
Ph: 847-303-5664
Fax: 847-303-5774
Internet: www.aamanet.org

AMERICAN ASSOCIATION OF NURSERYMEN (AAN)
1250 I St., NW, Suite 500
Washington, DC 20005
Ph: 888-227-4860 or 202-789-2900
FAX: 202-789-1893

AMERICAN ASSOCIATION OF STATE HIGHWAY AND TRANSPORTATION OFFICIALS (AASHTO)
444 N. Capital St., NW, Suite 249
Washington, DC 20001
Ph: 888-227-4860 or 202-624-5800
Fax: 202-624-5806

AMERICAN ASSOCIATION OF TEXTILE CHEMISTS AND COLORISTS (AATCC)
P.O. Box 12215
1 Davis Drive
Research Triangle Park, NC 27709-2215

Ph: 919-549-8141
Fax: 919-549-8933

AMERICAN BEARING MANUFACTURERS ASSOCIATION (ABEMA)
1200 19th Street, NW, Suite 300
Washington, DC 20036-4303
Ph: 202-429-5155
Fax: 202-223-4579

AMERICAN BOILER MANUFACTURERS ASSOCIATION (ABMA)
950 N. Glebe Rd., Suite 160
Arlington, VA 22203-1824
Ph: 703-522-7350
Fax: 703-522-2665

AMERICAN CONCRETE PIPE ASSOCIATION (ACPA)
222 West Las Colinas Blvd., Suite 641
Irving, TX 75039-5423
Ph: 972-506-7616
Fax: 972-506-7682
Internet: http://www.concrete-pipe.org
e-mail: info@concrete-pipe.org

AMERICAN CONFERENCE OF GOVERNMENTAL INDUSTRIAL HYGIENISTS (ACGIH)
1330 Kemper Meadow Dr.
Cincinnati, OH 45240
Ph: 513-742-2020
Fax: 513-742-3355

AMERICAN FOREST & PAPER ASSOCIATION (AF&PA)
1111 Nineteenth St. NW, Suite 800
Washington, DC 20036
Ph: 800-294-2372
Fax: 202-463-2791
e-mail: http://www.awc.org
Order From: American Wood Council
P.O. Box 5364
Madison, WI 53705-5364
Ph: 800-890-7732
Fax: 608-231-2152

AMERICAN GAS ASSOCIATION (AGA)
Order from: AGA Distribution Center
1515 Wilson Blvd.
P.O. Box 79230
Baltimore, MD 21279-0230
Ph: 301-617-7819
Fax: 301-206-9789

AMERICAN GEAR MANUFACTURERS ASSOCIATION (AGMA)
1500 King St., Suite 201
Alexandria, VA 22314-2730

Ph: 703-684-0211
Fax: 703-684-0242
Order From: Global Engineering Documents
15 Inverness Lane East
Englewood, CO 80112 Ph: 800-854-7179 Fax: 303-397-2740

AMERICAN HARDBOARD ASSOCIATION (AHA)
1210 W. Northwest Highway
Palatine, IL 60067
Ph: 708-934-8800
Fax: 708-934-8803

AMERICAN INSTITUTE OF STEEL CONSTRUCTION (AISC)
One East Wacker Dr., Suite 3100
Chicago, IL 60601-2001
Ph: 312-670-2400
Publications: 800-644-2400
Fax: 312-670-2400
Internet: http://www.aiscweb.com

AMERICAN INSTITUTE OF TIMBER CONSTRUCTION (AITC)
7012 So. Revere Parkway, Suite 140
Englewood, CO 80112
Ph: 303-792-9559
Fax: 303-792-0669

AMERICAN IRON AND STEEL INSTITUTE (AISI)
ATTN: Publication Orders
P.O. Box 4321
Chestertown, MD 21690
Ph: 800-277-3850
Fax: 410-810-0910

AMERICAN NATIONAL STANDARDS INSTITUTE (ANSI)
11 West 42nd St
New York, NY 10036
Ph: 212-642-4900
Fax: 212-398-0023
Internet: www.ansi.org/

AMERICAN PETROLEUM INSTITUTE (API)
1220 L St., NW
Washington, DC 20005
Ph: 202-682-8375
Fax: 202-962-4776
Internet: http://www.api.org

AMERICAN RAILWAY ENGINEERING ASSOCIATION (AREA)
50 F St., NW, Suite 5200
Washington, DC 20001
Ph: 202-639-2190
Fax: 202-639-2183

AMERICAN SOCIETY FOR NONDESTRUCTIVE TESTING (ASNT)
1711 Arlingate Lane
P.O. Box 28518
Columbus, OH 43228-0518
Ph: 800-222-2768
Fax: 614-274-6899

AMERICAN SOCIETY FOR TESTING AND MATERIALS (ASTM)
100 Barr Harbor Drive
West Conshohocken, PA 19428-2959
Ph: 610-832-9500
Fax: 610-832-9555
E-mail: cservice@astm.org

AMERICAN SOCIETY OF CIVIL ENGINEERS (ASCE)
1801 Alexander Bell Drive
Reston, VA 20190-4400
Ph: 800-548-2723
Fax: 703-295-6333
Internet: www.pubs.asce.org
e-mail: marketing@asce.org

AMERICAN SOCIETY OF HEATING, REFRIGERATING AND AIR-CONDITIONING ENGINEERS (ASHRAE)
1791 Tullie Cir., NE
Atlanta, GA 30329-2305
Ph: 800-527-4723 or 404-636-8400
Fax: 404-321-5478
Internet: http://www.ashrae.org

AMERICAN SOCIETY OF MECHANICAL ENGINEERS (ASME)
22 Law Dr., Box 2300
Fairfield, NJ 07007-2900
Ph: 800-843-2763
Fax: 201-882-1717
Internet: www.asme.org

AMERICAN SOCIETY OF SANITARY ENGINEERING (ASSE)
P.O. Box 40362
Bay Village, OH 44140
Ph: 216-835-3040
Fax: 216-835-3488
E-mail: asse@ix.netcom.com

AMERICAN WATER WORKS ASSOCIATION(AWWA)
6666 West Quincy
Denver, CO 80235
Ph: 800-926-7337
Fax: 303-795-1989
Internet: www.awwa.org

AMERICAN WELDING SOCIETY (AWS)
550 N.W. LeJeune Road
Miami, FL 33126
Ph: 305-443-9353
Fax: 305-443-7559

AMERICAN WOOD-PRESERVERS' ASSOCIATION (AWPA)
3246 Fall Creek Highway, Suite 1900
Grandbury, TX 76049-7979
Ph: 817-326-6300
Fax: 817-326-6306

APA - THE ENGINEERED WOOD ASSOCIATION (APA)
P.O. Box 11700
Tacoma, WA 98411-0700
Ph: 253-565-6600
Fax: 253-563-7265
Internet: www.apawood.org

ARCHITECTURAL WOODWORK INSTITUTE (AWI)
1952 Isaac, Newton Square West
Centreville, VA 20190
Ph: 703-733-0600
Fax: 703-733-0584

ASBESTOS CEMENT PIPE PRODUCERS ASSOCIATION (ACPPA)
1745 Jefferson Davis Highway, Suite 406
Arlington, VA 22202
Ph: 703-412-1153
Fax: 703-412-1152

ASM INTERNATIONAL (ASM)
Materials Park, OH 44073-0002
Ph: 216-338-5151

Order Publications From:
ASM International
ATTN: MSC/Book Order
P.O. Box 473
Novelty, OH 44072-9901

ASPHALT INSTITUTE (AI)
Research Park Dr.
P.O. Box 14052
Lexington, KY 40512-4052 Ph: 606-288-4960
Fax: 606-288-4999
Internet: www.asphaltinstitute.org
e-mail: asphalti@asphaltinstitute.org

ASSOCIATED AIR BALANCE COUNCIL (AABC)
1518 K St., NW, Suite 503

Washington, DC 20005
Ph: 202-737-0202
Fax: 202-638-4833

ASSOCIATION FOR THE ADVANCEMENT OF MEDICAL INSTRUMENTATION (AAMI)
3330 Washington Blvd., Suite 400
Arlington, VA 22201-4598
Ph: 703-525-4890
Fax: 703-276-0793
Internet: Can be found at: www.cssinfo.com

ASSOCIATION OF EDISON ILLUMINATING COMPANIES (AEIC)
600 No. 18th St.
P.O. Box 2641
Birmingham, AL 35291-0992
Ph: 205-257-2530
Fax: 205-257-2540
Internet: http://www.aeic.org/index.htm
E-Mail: veazey-white@apc.com

ASSOCIATION OF HOME APPLIANCE MANUFACTURERS (AHAM)
20 No. Wacker Dr., Suite 1500
Chicago, IL 60606
Ph: 312-984-5800
Fax: 312-984-5823
Internet: http://www.aham.org

ASSOCIATION OF IRON AND STEEL ENGINEERS (AISE)
Three Gateway Center, Suite 2350
Pittsburg, PA 15222
Ph: 412-281-6323

BIFMA INTERNATIONAL (BIFMA)
2680 Horizon Drive SE, Suite A-1
Grand Rapids, MI 49546-7500 Ph: 616-285-3963
Fax: 616-285-3765
Internet: www.bifma.com E-mail: ddriscol@iserv.net

BRICK INSTITUTE OF AMERICA (BIA)
11490 Commerce Park Dr., Suite 308
Reston, VA 22091
Ph: 703-620-0010
Fax: 703-620-3928

BUILDERS HARDWARE MANUFACTURERS ASSOCIATION (BHMA)
355 Lexington Ave. New York, NY 10017-6603
Ph: 212-661-4261
Fax: 212-370-9047
Internet: www.buildershardware.com

BUILDING OFFICIALS & CODE ADMINISTRATORS INTERNATIONAL (BOCA)

4051 W. Flossmoor Rd.
Country Club Hills, IL 60478-5795
Ph: 708-799-2300
Fax: 708-799-4981
E-mail: boca@aecnet.com

BUREAU OF RECLAMATION (BOR)
Dept. of the Interior
P.O. Box 25007
Denver, CO 80225
Ph: 303-236-0305, ext. 457
Order from:
National Technical Information
Services (NTIS)
5285 Port Royal Rd.
Springfield, VA 22161
Ph: 800-553-6847
Fax: 703-321-8547
Internet: http://www.fedworld.gov/ntis/ntishome.html

CALIFORNIA REDWOOD ASSOCIATION (CRA)
405 Enfrente Ave., Suite 200
Novato, CA 94949
Ph: 415-382-0662
Fax: 415-382-8531

CANADIAN ELECTRICITY ASSOCIATION (CEA)
1 Westmount Square, Suite 1600
Montreal, Quebec, Canada H3Z 209
Ph: 514-937-6181
Fax: 514-937-6498
Internet: www.canelect.ca
e-mail: info@canelect.ca

CARPET AND RUG INSTITUTE (CRI)
310 Holiday Ave.
P.O. Box 2048
Dalton, GA 30722-2048
Ph: 706-278-0232
Fax: 706-278-8835
Internet: carpet-rug.com

CAST IRON SOIL PIPE INSTITUTE (CISPI)
5959 Shallowford Rd., Suite 419
Chattanooga, TN 37421
Ph: 423-892-0137
Fax: 423-892-0817

CEILINGS & INTERIOR SYSTEMS CONTRACTORS ASSOCIATION (CISCA)
1500 Lincoln Highway, Suite 202
St. Charles, IL 60174
Ph: 708-584-1919
Fax: 708-584-2003

CHLORINE INSTITUTE (CI)
2001 L St., NW
Washington, DC 20036
Ph: 202-775-2790
Fax: 202-223-7225

CODE OF FEDERAL REGULATIONS (CFR)
Order from:
Government Printing Office
Washington, DC 20402
Ph: 202-512-1800
Fax: 202-275-7703
Internet: http://www.pls.com:8001/his/cfr.html

COMMERCIAL ITEM DESCRIPTIONS (CID)
Order from:
General Services Administration
Federal Supply Service Bureau
470 E L'Enfant Plaza, S.W.
Washington, DC 20407
Ph: 202-619-8925
Internet: http://pub.fss.gsa.gov/h1-pub.html

COMPRESSED GAS ASSOCIATION (CGA)
1725 Jefferson Davis Highway, Suite 1004
Arlington, VA 22202-4102
Ph: 703-412-0900
Fax: 703-412-0128
e-mail: Customer Service @ cganet.com

CONCRETE REINFORCING STEEL INSTITUTE (CRSI)
933 No. Plum Grove Rd.
Schaumburg, IL 60173-4758
Ph: 847-517-1200
Fax: 847-517-1206
Internet: http://www.crsi.org

CONSUMER PRODUCT SAFETY COMMISSION (CPSC)
Washington, DC 20207
Ph: 301-504-0580

CONVEYOR EQUIPMENT MANUFACTURERS ASSOCIATION (CEMA)
9384-D Forestwood Lane
Manassas, VA 22110
Ph: 703-330-7079
Fax: 703-330-7984

COOLING TOWER INSTITUTE (CTI)
P.O. Box 73383
Houston, TX 77273

Ph: 281-583-4087
Fax: 281-537-1721

COPPER DEVELOPMENT ASSOCIATION (CDA)
260 Madison Ave.
New York, NY 10016
Ph: 212-251-7200
Fax: 212-251-7234
E-mail: http://www.copper.org

CORPS OF ENGINEERS (COE)
Order from:
U.S. Army Engineer Waterways Experiment Station
ATTN: Technical Report Distribution Section, Services Branch, TIC
3909 Halls Ferry Rd.
Vicksburg, MS 39180-6199
Ph: 601-634-2355
Fax: 601-634-2506

COUNCIL OF AMERICAN BUILDING OFFICIALS (CABO)
5203 Leesburg Pike, Suite 708
Falls Church, VA 22041
Ph: 703-931-4533
Fax: 703-379-1546

DEPARTMENT OF AGRICULTURE (USDA)
14TH STREET & INDEPENDENCE AVE. S.W.
WASHINGTON, D.C. 20250
Ph: (202) 720-2791
Publications: 301-344-2340

DEPARTMENT OF COMMERCE (DOC)
Order From:
National Technical Information Service
5285 Port Royal Road
Springfield, VA 22161
Ph: 703-487-4600
Fax: 703-321-8547
Internet: http://www.ntis.gov

DEPARTMENT OF DEFENSE (DOD)
Order from:
National Technical Information Service
5285 Port Royal Road
Springfield, VA 22161
Ph: 703-487-4650
FAX: 703-321-8547

DEPARTMENT OF HOUSING AND URBAN DEVELOPMENT (HUD)
Order from:
HUD User

P.O. Box 6091
Rockville, MD 20850
Ph: 800-245-2691
e-mail: Huduser@aspensys.com

DEPARTMENT OF STATE (SD)
ATTN: DS/PSP/SEP
SA-6, Room 804
Washington, DC 20522-0602
Ph: 703-875-6537

DOOR AND ACCESS SYSTEM MANUFACTURERS ASSOCIATION (DASMA)
1300 Sumner Avenue
Cleveland, OH 44115-2851
Ph: 216-241-7333
Fax: 216-241-0105
Internet: ww.taol.com/dasma
e-mail: dasma@taol.com

DUCTILE IRON PIPE RESEARCH ASSOCIATION (DIPRA)
245 Riverchase Parkway East, Suite 0
Birmingham, AL 35244-1856
Ph: 205-988-9870
Fax: 205-988-9822
Internet: www.diprn.org

EIFS INDUSTRY MEMBERS ASSOCIATION (EIMA)
402 No. 4th St., Suite 102
Yakima, WA 98901-2470
Ph. 509-457-3500
Fax: 509-457-0169

ELECTRONIC INDUSTRIES ASSOCIATION (EIA)
2500 Wilson Blvd.
Arlington, VA 22201-3834
Ph: 703-907-7500
Fax: 703-907-7501
Internet: www.eia.org
Order From:
Global Engineering Documents
15 Inverness Lane East
Englewood, CO 80112
Ph: 800-854-7179
Fax: 303-397-2740
Internet: http://global.ihs.com

ENGINEERING MANUALS (EM)
USACE Publications Depot
Attn: CEIM-SP-D
2803 52nd Avenue
Hyattsville, MD 20781-1102
Ph: 301-394-0081

ENGINEERING PAMPHLETS (EP)
USACE Publications Depot
Attn: CEIM-SP-D
2803 52nd Avenue
Hyattsville, MD 20781-1102
Ph: 301-394-0081

ENGINEERING REGULATIONS (ER)
USACE Publications Depot
Attn: CEIM-SP-D 2803 52nd Avenue
Hyattsville, MD 20781-1102
Ph: 301-394-0081

ENVIRONMENTAL PROTECTION AGENCY (EPA)
Public Information Center
401 M St., SW
Washington, DC 20460
Ph: 800-490-9198
FAX: 202-260-6257
Internet: http://www.epa.gov NOTE: Some documents are available only from National Technical Information
Services (NTIS)
5285 Port Royal Rd.
Springfield, VA 22161
Ph: 800-553-6847
Fax: 703-321-8547
Internet: http://www.fedworld.gov/ntis/ntishome.html

EXPANSION JOINT MANUFACTURERS ASSOCIATION (EJMA)
25 No. Broadway
Tarrytown, NY 10591
Ph: 914-332-0040

FACTORY MUTUAL ENGINEERING AND RESEARCH (FM)
1151 Boston-Providence Turnpike
P.O. Box 9102
Norwood, MA 02062-9102
Ph: 617-255-4681
Fax: 617-255-4359
Internet: http://www.factorymutual.com

FEDERAL AVIATION ADMINISTRATION (FAA)
Order from:
Superintendant of Documents
U. S. Government Printing Office
Washington, DC 20402
Ph: 202-512-1800
Fax: 202-512-1356
For free documents, order from:
Federal Aviation Administration
Dept. of Transportation
ATTN: General Services Section M-45
400 Seventh St., SW

Washington, DC 20590-0001
Ph: 202-366-4000
Fax: 202-366-2795

FEDERAL HIGHWAY ADMINISTRATION (FHWA)
Office of Highway Safety (HHS-31)
400 Seventh St., SW
Washington, DC 20590-0001
Ph: 202-366-0411
Fax: 202-366-2249
Order from:
Government Printing Office
Superintendent of Documents
Washington, DC 20402
Ph: 202-783-3238

FEDERAL SPECIFICATIONS (FS)
Order from:
General Services Administration
Federal Supply Service Bureau
470 L'Enfant Plaza, S.W. Washington, DC 20407
Ph: 202-619-8925
Fax: 202-619-8978
Internet: http://pub.fss.gsa.gov/h1-pub.html

FEDERAL STANDARDS (FED-STD)
Order from:
General Services Administration
Federal Supply Service Bureau
470 E L'Enfant Plaza, S.W.
Washington, DC 20407
Ph: 202-619-8925
Internet: http://pub.fss.gsa.gov/hi-pub.html

FORESTRY SUPPLIERS (FSUP)
P.O. Box 8397
Jackson, MS 39284-8397
Ph: 800-647-5368
Fax: 800-543-4203

FOUNDATION FOR CROSS-CONNECTION CONTROL AND HYDRAULIC RESEARCH (FCCCHR)
USC
KAP-200 University Park MC-2531
Los Angeles, CA 90089-2531
Ph: 213-740-2032
Fax: 213-740-8399

GEOLOGICAL SOCIETY OF AMERICA (GESOA)
P.O. Box 9140
Boulder, CO 80301
Ph: 800-472-1988
Fax: 303-447-1133

GEOSYNTHETIC RESEARCH INSTITUTE (GRI)
Drexel University
West Wing Rush Bldg. 10
Philadelphia, PA 19104
Ph: 215-895-2343
Fax: 215-895-1437
E-mail: robert.koerner@coe.drexel.edu

GERMANY INSTITUTE FOR STANDARDIZATION (DIN)
Order from:
Global Engineering Documents
15 Inverness Lane East
Englewood, CO 80112
Ph: 800-854-7179
Fax: 303-397-7238

GLASS ASSOCIATION OF NORTH AMERICA (GANA)
3310 S.W. Harrison St.
Topeka, KS 66611-2279
Ph: 913-266-7013
Fax: 913-266-0272

GYPSUM ASSOCIATION (GA)
810 First St. NE, Suite 510
Washington, DC 20002
Ph: 202-289-5440
Fax: 202-289-3707

HARDWOOD PLYWOOD & VENEER ASSOCIATION (HPVA)
1825 Michael Faraday Dr.
P.O. Box 2789
Reston, VA 22090-2789
Ph: 202-435-2900
Fax: 703-435-2537

HEAT EXCHANGE INSTITUTE (HEI)
1300 Sumner Ave
Cleveland, OH 44115-2851
Ph: 216-241-7333
Fax: 216-241-0105

H.P. WHITE LABORATORY (HPW)
3114 Scarboro Rd.
Street, MD 21154
Ph: 410-838-6550

HYDRAULIC INSTITUTE (HI)
9 Sylvan Way, Suite 180
Parsippany, NJ 07054-3802
Ph: 888-786-7744 or 973-267-9700

Fax: 973-267-9053

HYDRONICS INSTITUTE DIVISION OF GAMA (HYI)
35 Russo Pl.
P.O. Box 218
Berkeley Heights, NJ 07922-0218
Ph: 908-464-8200
Fax: 908-464-7818
Internet: www.gamanet.org

IBM PUBLICATION CORPORATION (IBM)
P.O. Box 29570
Raleigh, NC 27626-0570
Ph: 800-879-2755, Option 1
Fax: 800-445-9269

ILLUMINATING ENGINEERING SOCIETY OF NORTH AMERICA (IESNA)
120 Wall St., 17 Floor
New York, NY 10005-4001
Ph: 212-248-5000
Fax: 212-248-5017
Internet: www.iesna.org

INDUSTRIAL FASTENERS INSTITUTE (IFI)
1717 East 9th St., Suite 1105
Cleveland, OH 44114-2879
Ph: 216-241-1482
Fax: 216-241-5901
Internet: http://www.industrial-fasteners.org
e-mail: indfast@aol.com

INSECT SCREENING WEAVERS ASSOCIATION (ISWA)
P.O. Box 1018
Ossining, NY 10562
Ph: 914-962-9052
Fax: 914-923-3031

INSTITUTE FOR INTERCONNECTING AND PACKAGING ELECTRONIC CIRCUITS (IPC)
2215 Sanders Rd.
Northbrook, IL 60062-6135
Ph: 847-509-9700
Fax: 847-509-9798
Internet: www.ipc.org e-mail: orderipc@ipc.org

INSTITUTE OF CLEAN AIR COMPANIES (ICAC)
1660 L St., NW, Suite 1100
Washington, DC 20036-5603
Ph: 202-457-0911
Fax: 202-331-1388
E-mail: sjenkins@icac.com
Internet: icac.com

INSTITUTE OF ELECTRICAL AND ELECTRONICS ENGINEERS (IEEE)
445 Hoes Ln, P. O. Box 1331
Piscataway, NJ 08855-1331
Ph: 800-678-4333
Fax: 908-981-9667
Internet: http//stdsbbs.ieee.org
E-mail: Stds-maillst@ieee.org

Note: Documents may also be ordered from:
Global Engineering Documents
15 Inverness Way East
Englewood, CO 80112
Ph: 800-854-7179
Fax:303-397-2740
Internet: global.ihs.com

INSTITUTE OF ENVIRONMENTAL SCIENCES (IES)
940 East Northwest Highway
Mount Prospect, IL 60056
Ph: 847-255-1561
Fax: 847-255-1699

INSULATED CABLE ENGINEERS ASSOCIATION (ICEA)
P.O. Box 440
South Yarmouth, MA 02664
Ph: 508-394-4424
Fax: 508-394-1194

INTERNATIONAL APPROVAL SERVICES (IAS)
8501 East Pleasant Valley Rd.
Cleveland, OH 44131
Ph: 216-524-4990
Fax: 216-642-3463
Internet: www.iasapprovals.org

INTERNATIONAL ASSOCIATION OF PLUMBING AND MECHANICAL OFFICIALS (IAPMO)
20001 Walnut Dr., So.
Walnut, CA 91789-2825
Ph: 409-595-8449
Fax: 909-594-3690

INTERNATIONAL CONFERENCE OF BUILDING OFFICIALS (ICBO)
5360 Workman Mill Rd.
Whittier, CA 90601-2298
Ph: 310-699-0541
Fax: 310-692-3853

INTERNATIONAL ELECTROTECHNICAL COMMISSION (IEC)
3, rue de Varembe, Case Postale 131
CH-1211 Geneva 20, Switzerland

Ph: 41-22-919-0211
Fax: 41-22-919-0300
Internet: http://www.iec.ch
e-mail: custserv@iec.ch

INTERNATIONAL INSTITUTE OF AMMONIA REFRIGERATION (IIAR)
1200 Nineteenth St., NW, Suite 300
Washington, DC 20036-2912
Ph: 202-857-1110
Fax: 202-223-4579

INTERNATIONAL MUNICIPAL SIGNAL ASSOCIATION (IMSA)
165 East Union St. P.O. Box 539
Newark, NY 14513
Ph: 315-331-2182
Fax: 315-331-8505

INTERNATIONAL ORGANIZATION FOR STANDARDIZATION (ISO)
Order from:
American National Standards Institute
11 West 42nd St
New York, NY 10036
Ph: 212-642-4900
Fax: 212-398-0023
Internet: www.ansi.org
Internet for ISO docs: www.iso.ch

ISA (ISA)
67 Alexander Drive
P.O. Box 12277
Research Triangle Park, NC 27709
Ph: 919-549-8411
Fax: 919-549-8288
e-mail: ISA@isa.org
Internet: http://www.isa.org

INTERNATIONAL SLURRY SURFACING ASSOCIATION (ISSA)
1200 Nineteenth St., NW, Suite 300
Washington, DC 20036-2401
Ph: 202-857-1160
Fax: 202-223-4579
Internet: http://www.rochester.edu/issa/

INTERNATIONAL TELECOMMUNICATION UNION (ITU)
Order from:
U.S. Dept of Commerce
National Technical Information Service
585 Port Royal Road.
Springfield, VA 22161
Ph: 703-487-4660
FAX: 703-321-8547
For documents not avail
from Dept of Commerce:

E-Mail: sales@itu.ch
Fax: 41.22.730.5194

IRON & STEEL SOCIETY (ISS)
410 Commonwealth Dr.
Warrendale, PA 15086-7512
Ph: 412-776-1535, ext. 1
Fax: 412-776-0430
E-Mail: custserv @ issource.org
Internet: www.issourse.org

KITCHEN CABINET MANUFACTURERS ASSOCIATION (KCMA)
1899 Preston White Dr.
Reston, VA 20191-5435
Ph: 703-264-1690
Fax: 703-620-6530
Internet: www.kcma.org

MANUFACTURERS STANDARDIZATION SOCIETY OF THE VALVE AND FITTINGS INDUSTRY (MSS)
127 Park St., NE
Vienna, VA 22180-4602
Ph: 703-281-6613
Fax: 703-281-6671
Internet: //cssinfo.com/info/mss/html

MAPLE FLOORING MANUFACTURERS ASSOCIATION (MFMA)
60 Revere Dr., Suite 500
Northbrook, IL 60062
Ph: 847-480-9138
Fax: 847-480-9282
e-mail: mfma@maplefloor.com

MARBLE INSTITUTE OF AMERICA (MIA)
33505 State St.
Farmington, MI 48335
Ph: 810-476-5558
Fax: 810-476-1630

MATERIAL HANDLING INDUSTRY (MHI)
8720 Red Oak Blvd., Suite 201
Charlotte, NC 28217-3992
Ph: 800-345-1815
704-522-9644
Fax: 704-522-7826

METAL BUILDING MANUFACTURERS ASSOCIATION (MBMA)
1300 Sumner Ave.
Cleveland, OH 44115-2851
Ph: 216-241-7333
Fax: 216-241-0105

MIDWEST INSULATION CONTRACTORS ASSOCIATION (MICA)
2017 So. 139th Cir.
Omaha, NE 68144
Ph: 402-342-3463
Fax: 402-330-9702

MILITARY HANDBOOKS (MIL-HDBK)
Order from:
Standardization Documents Order Desk
Bldg 4D
700 Robbins AV
Philadelphia, PA 19111-5094
Ph: 215-697-2179
Fax: 215-697-2978
Internet: www.dodssp.daps.mil

MILITARY SPECIFICATIONS (MS)
Order from:
Standardization Documents Order Desk
Building 4, Section D
700 Robbins Ave.
Philadelphia, PA 19111-5094
Ph: 215-697-2179
Fax: 215-697-2978
Internet: www.dodssp.daps.mil

MILITARY STANDARDS (MIL-STD)
Order from:
Standardization Documents Order Desk
Building 4, Section D
700 Robbins Ave.
Philadelphia, PA 19111-5094
Ph: 215-697-2179
Fax: 215-697-2978
Internet: www.dodssp.daps.mil

NACE INTERNATIONAL (NACE)
P.O. Box 218340
Houston, TX 77218-8340
Ph: 221-228-6200
Fax: 281-228-6369
Internet: www.nace.org

NATIONAL ASSOCIATION OF ARCHITECTURAL METAL MANUFACTURERS (NAAMM)
8 So. Michigan Ave, Suite 100
Chicago, IL 60603
Ph: 312-782-4951
Internet: www.gss.net/naam
e-mail: naamm@gss.net

NATIONAL ASSOCIATION OF PLUMBING-HEATING-COOLING CONTRACTORS (NAPHCC)

180 S. Washington Street
P.O. Box 6808
Falls Church, VA 22046
Ph: 800-533-7694
Fax: 703-237-7442

NATIONAL BOARD OF BOILER AND PRESSURE VESSEL INSPECTORS (NBBPVI)
1055 Crupper Ave.
Columbus, OH 43229-1183
Ph: 614-888-2463
Fax: 614-847-1147
e-mail: orders @ nationalboard.org

NATIONAL CABLE TELEVISION ASSOCIATION (NCTA)
1724 Massachusetts Ave. NW
Washington, DC 20036-1969
Ph: 202-775-3550
Fax: 202-775-3698

NATIONAL COUNCIL ON RADIATION PROTECTION AND MEASUREMENTS (NCRP)
7910 Woodmont Ave., Suite 800
Bethesda, MD 20814-3095
Ph: 800-229-2652
Fax: 301-907-8768

NATIONAL DRILLING ASSOCIATION (NDA)
3008 Millwood Avenue
Columbia, SC 29205
Ph: 800-445-8629
Fax: 803-765-0860

NATIONAL ELECTRICAL MANUFACTURERS ASSOCIATION (NEMA)
1300 N. 17th St., Suite 1847
Rosslyn, VA 22209
Ph: 703-841-3200
Fax: 202-457-8473
Internet: http//www.nema.org/

NATIONAL ENVIRONMENTAL BALANCING BUREAU (NEBB)
8575 Grovemont Circle
Gaithersburg, MD 20877-4121
Ph: 301-977-3698
Fax: 301-977-9589

NATIONAL FIRE PROTECTION ASSOCIATION (NFPA)
One Batterymarch Park
P.O. Box 9101
Quincy, MA 02269-9101
Ph: 800-344-3555
Fax: 800-593-6372
Internet: http://www.nfpa.org

NATIONAL FLUID POWER ASSOCIATION (NFLPA)
3333 No. Mayfair Rd.
Milwaukee, WI 53222-3219
Ph: 414-778-3363
Fax: 414-778-3361
Internet: www.nfpa.com
E-mail: nfpa@nfpa.com

NATIONAL HARDWOOD LUMBER ASSOCIATION (NHLA)
P.O. Box 34518
Memphis, TN 38184-0518
Ph: 901-377-1818
Fax: 901-382-6419
e-mail: nhla@natlhardwood.org

NATIONAL INSTITUTE FOR CERTIFICATION IN ENGINEERING TECHNOLOGIES (NICET)
1420 King Street
Alexandria, VA 22314-2794
Ph: 888-476-4238
Internet: www.nicet.org

NATIONAL INSTITUTE FOR OCCUPATIONAL SAFETY AND HEALTH (NIOSH)
Mail Stop C-13
4676 Columbia Parkway
Cincinnati, OH 45226-1998
Ph: 800-356-4676
Internet: http://www.cdc.gov/niosh/homepage.html
To order pubs for which a fee is charged,
order from:
Superintendent of Documents
Government Printing Office
Washington, DC 20402-9325
Ph: 202-783-3238
Fax: 202-275-7703
Internet: http://www.osha-slc.gov

NATIONAL INSTITUTE OF JUSTICE (NIJ)
National Law Enforcement and Corrections Technology Center
2277 Research Blvd. - Mailstop 1E
Rockville, MD 20850
Ph: 800-248-2742 or 301-519-5060
Fax: 301-519-5179
Internet: http://www.nlectc.org
e-mail: nlectc@aspensys.com

NATIONAL INSTITUTE OF STANDARDS AND TECHNOLOGY (NIST)
Department of Commerce
Gaithersburg, MD 20899-0001
Ph: 301-975-4025
Fax: 301-926-1630
Order From:
Superintendent of Documents

U.S. Government Printing Office (GPO)
Washington, DC 20402
Ph: 202-512-1800
Fax: 202-512-2250
or
National Technical Information Services (NTIS)
5285 Port Royal Rd.
Springfield, VA 22161
Ph: 800-553-6847
Fax: 703-321-8547
Internet: http://ww.gov/ntis.gov

NATIONAL LIME ASSOCIATION (NLA)
200 No. Glebe Rd., Suite 800
Arlington, VA 22203-3728
Ph: 703-243-5463
Fax: 703-243-5489

NATIONAL OAK FLOORING MANUFACTURERS ASSOCIATION (NOFMA)
P.O. Box 3009
Memphis, TN 38173-0009
Ph: 901-526-5016
Fax: 901-526-7022

NATIONAL READY-MIXED CONCRETE ASSOCIATION (NRMCA)
900 Spring St.
Silver Spring, MD 20910
Ph: 301-587-1400
Fax: 301-585-4219

NATIONAL ROOFING CONTRACTORS ASSOCIATION (NRCA)
P.O. Box 809261
Chicago, IL 60680-9261
Ph: 800-323-9545
Fax: 708-299-1183

NATIONAL TERRAZZO & MOSAIC ASSOCIATION (NTMA)
3166 DesPlaines Ave., Suite 132
DesPlaines, IL 60018
Ph: 708-635-7744
Fax: 708-635-9127

NATIONAL WOOD WINDOW & DOOR ASSOCIATION (NWWDA)
1400 East Touhy Ave., Suite G-54
Des Plaines, IL 60018
Ph: 847-299-5200
Fax: 708-299-1286

NAVAL FACILITIES ENGINEERING COMMAND (NAVFAC)
200 Stovall St.
Code 151/FC
Alexandria, VA 22332-2300

Ph: 703-325-7360
Fax: 703-325-4450

NAVAL FACILITIES ENGINEERING SERVICE CENTER (NFESC)
560 Center Drive
Port Hueneme, CA 93043-4328
Ph: 805-982-9110

NORTH AMERICAN INSULATION MANUFACTURERS ASSOCIATION (NAIMA)
44 Canal Center Plaza, Suite 310
Alexandria, VA 22314
Ph: 703-684-0084

NORTHEASTERN LUMBER MANUFACTURERS ASSOCIATION (NELMA)
P.O. Box 87A
Cumberland Center, ME 04021
Ph: 207-829-6901
Fax: 207-829-4293

NSF INTERNATIONAL (NSF)
3475 Plymouth Rd.
P.O. Box 130140
Ann Arbor, MI 48113-0140
Ph: 313-769-8010
Fax: 313-769-0109
Internet: www.nsf.org

PIPE FABRICATION INSTITUTE (PFI)
P.O. Box 173
Springdale, PA 15144
Ph: 412-274-4722
Fax: 412-274-4722

PLASTIC PIPE AND FITTINGS ASSOCIATION (PPFA)
800 Roosevelt Rd., Bldg C, Suite 20
Glen Ellyn, IL 60137
Ph: 630-858-6540
Fax: 630-790-3095

PLUMBING AND DRAINAGE INSTITUTE (PDI)
45 Bristol Dr., Suite 101
South Easton, MA 02375
Ph: 508-230-3516
Fax: 508-230-3529
E-Mail: pdhw@tiac.net

PLUMBING AND PIPING INDUSTRY COUNCIL (PPIC)
501 Shatto Place, Suite 402
Los Angeles, CA 90020
Ph: 213-487-3790
Fax: 213-487-3880

PORCELAIN ENAMEL INSTITUTE (PEI)
4004 Hillsboro Pike, Suite 224B
Nashville, TN 37215
Ph: 615-385-5357
Fax: 615-385-5463
Internet: www.porcelainenamel.com

PRECAST/PRESTRESSED CONCRETE INSTITUTE (PCI)
175 West Jackson Blvd., Suite 1859
Chicago, IL 60604-9773
Ph: 312-786-0300
Fax: 312-786-0353
Internet: www.pci.org
e-mail: info@pci.org

RUBBER MANUFACTURERS ASSOCIATION (RMA)
1400 K St., NW
Washington, DC 20005
Ph: 800-325-5095
Fax: 330-725-0576

RURAL UTILITIES SERVICE (RUS)
ATTN: Publications
14th and Independence Ave., SW, Room 4028-S
Washington, DC 20250
Ph: 202-720-8674
Fax: 202-205-3654

SCREEN MANUFACTURERS ASSOCIATION (SMA)
2850 South Ocean Boulevard, Suite 114
Palm Beach, FL 33480-5535
Ph: 561-533-0991 Fax: 561-533-7466
e-mail: fscottfitzgerald@compuserve.com

SHEET METAL & AIR CONDITIONING CONTRACTORS' NATIONAL ASSOCIATION (SMACNA)
P.O. Box 221230
Chantilly, VA 22022-1230
Ph: 703-803-2989
Fax: 703-803-3732

SINGLE PLY ROOFING INSTITUTE (SPRI)
200 Reservoir St., Suite 309A
Needham, MA 02194
Ph: 781-444-0242
Fax: 781-444-6111
Internet: www.spri.org
e-mail: lkspri@aol.com

SOCIETY OF AUTOMOTIVE ENGINEERS (SAE)

400 Commonwealth Dr.
Warrendale, PA 15096-0001
Ph: 412-776-4970
Fax: 412-776-0790
Internet: http://www.sae.org
e-mail: publications @sae.org

SOUTHERN BUILDING CODE CONGRESS INTERNATIONAL (SBCCI)
900 Montclair Road
Birmingham, AL 35213-1206
Ph: 205-591-1853
Fax: 205-591-0775

SOUTHERN CYPRESS MANUFACTURERS ASSOCIATION (SCMA)
400 Penn Center Boulevard, Suite 530
Pittsburgh, PA 15235
Ph: 412-829-0770
Fax: 412-829-0844

SOUTHERN PINE INSPECTION BUREAU (SPIB)
4709 Scenic Highway
Pensacola, FL 32504-9094
Ph: 850-434-2611
Fax: 850-433-5594
e-mail: spib@spib.org

SSPC: THE SOCIETY FOR PROTECTIVE COATING (SSPC)
40 24th Street, 6th Floor
Pittsburgh, PA 15222-4643
Ph: 412-281-2331
Fax: 412-281-9992
Internet: www.sspc.org

STEEL DECK INSTITUTE (SDI)
P.O. Box 25
Fox River Grove, IL 60021
Ph: 847-462-1930
Fax: 847-462-1940
Internet: http://www.sdi.org
e-mail: janet@sdi.org

STEEL DOOR INSTITUTE (SDOI)
30200 Detroit Rd.
Cleveland, OH 44145-1967
Ph: 216-899-0010
Fax: 216-892-1404

STEEL JOIST INSTITUTE (SJI)
3127 Tenth Ave., North Ext.
Myrtle Beach, SC 29577-6760
Ph: 803-626-1995
Fax: 803-626-5565

STEEL TANK INSTITUTE (STI)
570 Oakwood Rd.
Lake Zurich, IL 60047
Ph: 847-438-0989
800-275-1300
Fax: 847-438-8766
Internet: www.steeltank.com
e-mail: technic@interaccess.com

STEEL WINDOW INSTITUTE (SWI)
1300 Sumner Ave.
Cleveland, OH 44115-2851
Ph: 216-241-7333
Fax: 216-241-0105

TILE COUNCIL OF AMERICA (TCA)
P.O. Box 1787
Clemson, SC 29633-1787
Ph: 864-646-8453
FAX: 864-646-2821

TRUSS PLATE INSTITUTE (TPI)
583 D'Onofrio Dr., Suite 200
Madison, WI 53719
Ph: 608-833-5900
Fax: 608-833-4360

TUBULAR EXCHANGE MANUFACTURERS ASSOCIATION (TEMA)
25 N. Broadway,
Tarrytown, NY 10591
Ph: 914-332-0040
Fax: 914-332-1541

UNDERWRITERS LABORATORIES (UL)
333 Pfingsten Rd.
Northbrook, IL 60062-2096
Ph: 800-704-4050
Fax: 847-509-6249
Internet: http://www.ul.com/
Order from:
Global Engineering Documents
15 Inverness Way East
Englewood, CO 80112-5776
Ph: 800-569-7128
Fax: 303-397-7945
Internet: http://global.ihs.com
E-mail: global@ihs.com

UNI-BELL PVC PIPE ASSOCIATION (UBPPA)
2655 Villa Creek Dr., Suite 155
Dallas, TX 75234

Ph: 214-243-3902
Fax: 214-243-3907

WATER QUALITY ASSOCIATION (WQA)
4151 Naperville Rd.
Lisle, IL 60532
Ph: 630-505-0160
Fax: 630-505-9637

WEST COAST LUMBER INSPECTION BUREAU (WCLIB)
P.O. Box 23145
Portland, OR 97281
Ph: 503-639-0651
Fax: 503-684-8928

WESTERN WOOD PRESERVERS INSTITUTE (WWPI)
601 Main Street
Suite 405
Vancover, WA 98660 Ph: 360-693-9958
Fax: 360-693-9967

WESTERN WOOD PRODUCTS ASSOCIATION (WWPA)
Yeon Bldg.
522 SW 5th Ave.
Portland, OR 97204-2122
Ph: 503-224-3930
Fax: 503-224-3934

WOOD MOULDING AND MILLWORK PRODUCERS ASSOCIATION (WMMPA)
507 First Street
Woodland, CA 95695
Ph: 916-661-9591
Fax: 916-661-9586

-- End of Section --

SECTION 01100

SPECIAL PROJECT PROCEDURES

PART 1 GENERAL

1.1 SAFETY AND HEALTH REQUIREMENTS MANUAL (EM 385-1-1, SEPTEMBER 1996).

In accordance with CONTRACT CLAUSE Paragraph "ACCIDENT PREVENTION", this manual applies to all work under this contract. There are submittals and testing required by this manual which require Government Approval (GA) before certain phases of work can begin.

1.2 MANAGEMENT OF CONTRACTOR-GENERATED HAZARDOUS WASTES AND PETROLEUM PRODUCTS (40 CFR, PART 262)

Contractors generating hazardous wastes and petroleum products on the military base on which this contract is performed shall be responsible for their management responsibilities as described in 40 CFR, part 262 and with the Oklahoma State Industrial Waste Management Regulations.

1.3 MONTHLY EXPOSURE REPORT

A monthly report of accident and exposure data shall be submitted by the Contractor. The report shall be submitted on SWD Form 743-J "MONTHLY EXPOSURE REPORT OF OPERATIONS AND ACTIVITIES" which will be provided to the Contractor at the pre-construction conference.

1.4 HAZARDOUS WASTE AND MATERIALS REPORTING

The Contractor shall notify the Contracting Officer upon encountering existing unanticipated material on the site which could jeopardize the safety of workers. The Government will be responsible for disposition of the waste if required.

Hazardous materials or waste transported onto or within the Post shall be reported to the Fort Sill Department of Environmental Quality (DEQ), 405-442-3234 prior to movement on Government property.

1.5 SPILL REPORTING

Upon verification of a release of any petroleum product over one gallon or any other hazardous waste or material, regardless of amount, the contractor shall notify the Fort Sill Department of Environmental Quality (DEQ), 405-442-3234. The DEQ will determine the cleanup required. Upon release of a petroleum product under one gallon and no threat of fire or explosion exists, the Contractor shall clean the contaminated area to remove all contaminants. Contamination in excess of 100 ppm of Total Petroleum Hydrocarbons shall be removed from the site. Upon verification of a release of any petroleum product over 1 gallon or any other hazardous waste or material, regardless of amount, the Contractor shall notify DEQ. Costs of soil tests required as a result of spills shall be the Contractor's responsibility. Contaminated material shall be disposed of properly.

1.6 RADIATION SOURCE COORDINATION

The Contractor shall coordinate with the Contracting Officer at least 7 days prior to bringing any radiation source onto an Army installation.

PART 2 PRODUCTS (NOT APPLICABLE)

PART 3 EXECUTION (NOT APPLICABLE)

--End of Section--

-- End of Section --

SECTION 01300

SUBMITTAL PROCEDURES

PART 1 GENERAL

1.1 SHOP DRAWINGS

1.1.1 General

Shop drawings shall conform to requirements of CONTRACT CLAUSE entitled "Specifications and Drawings for Construction." The Contractor shall submit to the Contracting Officer for approval five copies of all shop drawings as called for under the various headings of these specifications. Three sets of all shop drawings will be retained by the Contracting Officer and one set will be returned to the Contractor. Submittals shall include items such as: Contractor's, manufacturer's, or fabricator's drawings; descriptive literature including (but not limited to) catalog cuts, diagrams, operating charts or curves; test reports; test cylinders; samples; O&M manuals including parts list; certifications; warranties and other such required submittals. Submittals requiring Government approval shall be scheduled and made prior to the acquisition of the material or equipment covered thereby.

1.1.2 Review and Approval of Shop Drawings and Samples

The Contractor shall submit all items as required in the other sections of these specifications. The Contracting Officer may request submittals in addition to those specified when deemed necessary to adequately describe the work required. Units of weights and measures used on all submittals shall be the same used in the contract drawings. Each submittal shall be complete and in sufficient detail to allow ready determination of compliance with contract requirements. Prior to submittal, all items shall be checked and approved by the Contractor's Quality Control (CQC) representative and each respective transmittal shall be stamped, signed, and dated by the CQC representative certifying that the accompanying submittal complies with the contract requirements.

1.1.3 Approval Stamp

Approval by the Contractor shall be accomplished by stamping shop drawings with a stamp with information similar to the following:

_____ Approved
_____ Approved with corrections as noted on submittal data and/or attached sheets(s).
SIGNATURE: _____
TITLE: _____
DATE: _____

1.2 TRANSMITTAL FORM (ENG FORM 4025)

Transmittal Form (ENG Form 4025) shall be used for submitting submittals in accordance with the instructions on the reverse side of the form. (See sample Form 4025 at the end of this section) These forms will be furnished to the Contractor as needed. This form shall be properly completed by filling out all the heading blank spaces and identifying each item submitted. The specification paragraph or sheet number of the contract drawings pertinent to the data submitted shall be provided for each item. All samples of materials submitted as required by these specifications shall be properly identified and labeled for ready identification, and upon being approved, stored at the site of the work for jobsite use until all work has been completed and accepted by the Contracting Officer.

All proposed deviations requested by the Contractor shall be noted in the "Remarks" column of the ENG Form 4025. The Contractor shall set forth in writing the reason for any deviations and annotate such deviations on the shop drawing. The Government reserves the right to rescind inadvertent approval of shop drawings containing unnoted deviations.

1.3 SUBMITTAL REGISTER (ENG FORM 4288)

1.3.1 Preparation

A Submittal Register as shown at the end of this section shall list all items required by the specifications to be submitted to the Government. The list shall include shop drawings, tests, certificates, computations, and all other items specified to be submitted to the Contracting Officer except safety plans, quality control plans, environmental plans, and routine quality control tests. The listing shall give the page and paragraph number of the specifications for each item listed and the Contractor Scheduled Dates.

The technical specification sections shall be referenced for complete submittal requirements. The Contractor shall complete the form and return

the completed form to the Contracting Officer for approval. The approved Submittal Register will become the scheduling document and will be used to control submittals throughout the life of the contract. This register and the progress schedules shall be coordinated.

Submittals covering component items forming a system or items that are interrelated shall be scheduled to be coordinated and submitted concurrently. All various types of submittals for each item (i.e. data, drawings, instructions, certifications, etc.) shall be submitted concurrently. Adequate time, but not less than 30 days, shall be allowed on the Submittal Register for review and approval by the Government of all submittals. Delays, damages, or time extensions will not be allowed for time lost due to late submittals.

1.3.2 Submittal and Maintenance of Submittal Register

1.3.2.1 Initial Submittal

The Submittal Register shall be submitted within 21 days after notice to proceed.

1.3.2.2 Register Maintenance

The Contractor shall maintain the Submittal Register listing all submittals as the items are submitted. Listings shall be grouped by section number and listed in numerical sequence of the Transmittal Number shown on Form 4025. When the project is 90 percent complete, the up-to-date, typed Form shall be submitted to the Contracting Officer for review to assure that required submittals and resubmittals have been noted.

1.3.2.3 Final Submittal

Upon completion of the work the completed Submittal Register shall be submitted to the Contracting Officer.

1.4 SUBMITTAL CLASSIFICATION

Submittals are classified as follows:

1.4.1 Government Approved (GA)

Governmental approval is required for extensions of design, critical materials, deviations, equipment whose compatibility with the entire system must be checked, and other items as designated by the Contracting Officer. Within the terms of the Contract Clause entitled "Specifications and Drawings for Construction," they are considered to be "shop drawings." Upon completion of review of submittals requiring Government approval, the submittals will be identified as having received approval by being so stamped and dated. Three copies of the submittal will be retained by the Contracting Officer and one copy of the submittal will be returned to the Contractor.

1.4.2 For Information Only (FIO)

All submittals not requiring Government approval will be for information only. They are not considered to be "shop drawings" within the terms of the Contract Clause referred to above.

1.5 APPROVED SUBMITTALS

The approval of submittals by the Contracting Officer shall not be construed as a complete check, but will indicate only that the general method of construction, materials, detailing and other information are satisfactory. Approval will not relieve the Contractor of the responsibility for any error which may exist. After submittals have been approved by the Contracting Officer, no resubmittal for the purpose of substituting materials or equipment will be given consideration unless accompanied by an explanation as to why a substitution is necessary.

1.6 DISAPPROVED SUBMITTALS

The Contractor shall make all corrections required by the Contracting Officer and promptly furnish a corrected submittal in the form and number of copies as specified for the initial submittal. If the Contractor considers any correction indicated on the submittals to constitute a change to the contract, notice as required under the Contract Clause entitled "Changes" shall be given promptly to the Contracting Officer.

1.7 WITHHOLDING OF PAYMENT

Payment for materials incorporated in the work will not be made if required approvals have not been obtained.

1.8 SUBMITTAL DESCRIPTIONS

The submittals described below are those required and further described in other sections of the specifications. Submittals required by the CONTRACT CLAUSES and other nontechnical parts of the contract are not included.

SD-01 Data

Submittals which provide calculations, descriptions, or documentation of the work.

SD-04 Drawings

Submittals which graphically show relationship of various components of the work, schematic diagrams of systems, details of fabrication, layouts of particular elements, connections, and other relational aspects of the work.

SD-06 Instructions

Preprinted material describing installation of a product, system or material, including special notices and material safety data sheets, if any, concerning impedances, hazards, and safety precautions.

SD-07 Schedules

Tabular lists showing location, features, or other pertinent information regarding products, materials, equipment, or components to be used in the work.

SD-08 Statements

A document, required of the Contractor, or through the Contractor, from a supplier, installer, manufacturer, or other lower tier Contractor, the purpose of which is to confirm the quality or orderly progression of a portion of the work by documenting procedures, acceptability of methods or

personnel, qualifications, or other verifications of quality.

SD-09 Reports

Reports of inspections or tests, including test methods used, test results, analysis and interpretation of test results.

SD-13 Certificates

Statement signed by responsible official of a manufacturer of a product, system or material, attesting that the product, system or material meets specified requirements. The statement identifies the date of the certificate, name of the project, and list of the specific requirements which are being certified.

SD-14 Samples

Samples, including both fabricated and unfabricated physical examples of materials, products, and units of work as complete units or as portions of units of work.

SD-18 Records

Documentation to record compliance with technical or administrative requirements.

SD-19 Operation and Maintenance Manuals

Data which forms a part of an operation and maintenance manual.

1.9 CONSTRUCTION COLOR BOARD (SWT-EC-DM, MILITARY DESIGN SECTION)

1.9.1 Description

Contractor shall prepare in binder format a series of construction color boards which illustrate by means of physical samples the materials and finishes that are integral to the exterior and interior finishes of the completed facility. These items include, but are not limited to: masonry, architectural concrete, metal panels, siding and roofing, interior and exterior trim, paints, wall coverings, floor coverings and base, ceiling materials, plastic laminates, casework, stained woodwork, toilet partition and accessory finishes, etc. Color board samples (especially of exterior finish materials) are not required to be of full size or thickness but must represent the full range of color, texture, and finish of the materials. Carpet samples shall not be less than 3" by 5" or larger if needed to indicate complete color and design.

1.9.2 Format

Material samples shall be mounted on 8 1/2" x 11" modules with the project title and name of the installation placed in the lower right corner of each module. Sample board modules shall consist of protection (mat) boards of sufficient strength and thickness to support and anchor samples. Large or heavy samples shall be anchored with mechanical fasteners or epoxy resin cement. "Rubber cement" or other contact adhesives shall not be used. 8-1/2" x 11" boards shall be three-hole punched and placed in 3-ring binders. 8-1/2" x 11" boards may be securely taped together at edges to provide a "fold-out" display presentation provided overall dimensions of fold-out materials does not exceed 25-1/2" x 33". Each 3-ring binder shall be

identified on its spine with the following information: project fiscal year, project title, contract number, installation name where project is to be built and date of submittal (month and year). Presentation shall be organized in a logical manner to facilitate an orderly and speedy review. Sample items and color names shall be identified with names that correspond to names shown on the project color and finish schedule. If not readily apparent from the color and finish schedule, the sample boards shall be annotated to reflect what areas or surfaces of the facility are to receive the finishes shown.

1.9.3 Submittal

Five complete sets of the construction color boards shall be submitted to the Contracting Officer for approval within 75 calendar days after Notice to Proceed. All other technical submittals regarding finish materials depicted on these boards (test reports, certifications, manufacturer's instructions or data sheets, etc.) as required by technical portions of this project specification, shall be submitted prior to or concurrent with the construction color boards.

1.9.4 Approval

Upon receipt by the Contracting Officer of all finish material submittals (technical submittal materials and construction color boards) a 30-day review period by the Government shall be allowed. No finish work involving any item included on the color board shall be started by the Contractor prior to the approval of the total construction color boards. After receipt of final approval by the Government, the Contractor shall mark each approved item on the color board with its appropriate technical submittal transmittal number, make any corrections, additions or deletions required by the Government and return the five sets of approved construction color boards to the Contracting Officer. Any Contractor proposed substitutions of materials following approval must be approved by the Government as coordinating visually with other approved items equally as well as the originally approved item.

1.10 WIRING AND CONTROL DIAGRAMS

The Contractor shall furnish one reproducible, unfolded copy of all wiring and control diagrams and approved system layout drawings with the operating instructions called for under the various headings of these specifications for mechanical and electrical systems.

1.11 EMCS, MECHANICAL EQUIPMENT, AND TEMPERATURE CONTROL SUBMITTAL COORDINATION

1.11.1 General

Submittals for temperature controls and mechanical equipment as specified in Division 15 and/or energy management control systems (EMCS) as specified in Division 13 shall be submitted in accordance with the procedure outlined below.

1.11.2 Procedure

Submittals shall be submitted as Groups with each group to include items scheduled below. All items in Group 3 shall be submitted together at the same time. All items in each group shall be submitted prior to submittal of any item in a subsequent package.

1.11.3 Approval

Items to be submitted which are required to receive Government Approval (GA) as specified in the specifications shall be approved prior to the submittal of any item in a subsequent group.

1.11.4 Group Descriptions

Submittals included in each group shall be for items listed in the following schedule:

GROUP 1

Control Valves Control Dampers Temperature control piping and other control\EMCS rough-in hardware VAV controllers (when not specified as a part of the VAV boxes)

GROUP 2

Mechanical equipment operated or associated with temperature controls and/or EMCS.

GROUP 3

Temperature controls and EMCS items including the following:

point-to-point wiring diagrams bills of materials sequences of operation (with reference to I/O summary for EMCS) hardware data sheets EMCS I/OS summaries, system schematics, installation details, and legend

Temperature controls shall be transmitted separate from the EMCS items.

1.11.5 Dual Function Items

Items which serve for both the temperature control systems and the EMCS system shall be submitted (and approved if GA) in accordance with the temperature control requirements. However, the appropriate corresponding EMCS information shall also be submitted for information only (FIO). This information shall be listed separately as "Supplemental Reference" on the Transmittal Form.

PART 2 PRODUCTS (NOT APPLICABLE)

PART 3 EXECUTION (NOT APPLICABLE)

-- End of Section --

TRANSMITTAL OF SHOP DRAWINGS, EQUIPMENT DATA, MATERIAL SAMPLES, OR MANUFACTURER'S CERTIFICATES OF COMPLIANCE *(Read instructions on the reverse side prior to initiating this form)*	DATE	TRANSMITTAL NO.

SECTION I - REQUEST FOR APPROVAL OF THE FOLLOWING ITEMS *(This section will be initiated by the contractor)*

TO:	FROM:	CONTRACT NO.	CHECK ONE: ☐ THIS IS A NEW TRANSMITTAL ☐ THIS IS A RESUBMITTAL OF TRANSMITTAL _____
SPECIFICATION SEC. NO. *(Cover only one section with each transmittal)*	PROJECT TITLE AND LOCATION		

ITEM NO. *a.*	DESCRIPTION OF ITEM SUBMITTED *(Type size, model number/etc.)* *b.*	MFG OR CONTR. CAT., CURVE DRAWING OR BROCHURE NO. *(See instruction no. 8)* *c.*	NO. OF COPIES *d.*	CONTRACT REFERENCE DOCUMENT		FOR CONTRACTOR USE CODE *g.*	VARIATION *(See instruction No. 6)* *h.*	FOR CE USE CODE *i.*
				SPEC. PARA. NO. *e.*	DRAWING SHEET NO. *f.*			

REMARKS

I certify that the above submitted items have been reviewed in detail and are correct and in strict conformance with the contract drawings and specifications except as other wise stated.

_____

NAME AND SIGNATURE OF CONTRACTOR

SECTION II - APPROVAL ACTION

ENCLOSURES RETURNED *(List by Item No.)*	NAME, TITLE AND SIGNATURE OF APPROVING AUTHORITY	DATE

INSTRUCTIONS

1. Section I will be initiated by the Contractor in the required number of copies.

2. Each transmittal shall be numbered consecutively in the space provided for "Transmittal No.". This number, in addition to the contract number, will form a serial number for identifying each submittal. For new submittals or resubmittals mark the appropriate box; on resubmittals, insert transmittal number of last submission as well as the new submittal number.

3. The "Item No." will be the same "Item No." as indicated on ENG FORM 4288 for each entry on this form.

4. Submittals requiring expeditious handling will be submitted on a separate form.

5. Separate transmittal form will be used for submittals under separate sections of the specifications.

6. A check shall be placed in the "Variation" column when a submittal is not in accordance with the plans and specifications--also, a written statement to that effect shall be included in the space provided for "Remarks".

7. Form is self-transmittal, letter of transmittal is not required.

8. When a sample of material or Manufacturer's Certificate of Compliance is transmitted, indicate "Sample" or "Certificate" in column c, Section I.

9. U.S. Army Corps of Engineers approving authority will assign action codes as indicated below in space provided in Section I, column i to each item submitted. In addition they will ensure enclosures are indicated and attached to the form prior to return to the contractor. The Contractor will assign action codes as indicated below in Section I, column g, to each item submitted.

THE FOLLOWING ACTION CODES ARE GIVEN TO ITEMS SUBMITTED

A	--	Approved as submitted.	E	--	Disapproved (See attached).
B	--	Approved, except as noted on drawings.	F	--	Receipt acknowledged.
C	--	Approved, except as noted on drawings. Refer to attached sheet resubmission required.	FX	--	Receipt acknowledged, does not comply as noted with contract requirements.
D	--	Will be returned by separate correspondence.	G	--	Other *(Specify)*

10. Approval of items does not relieve the contractor from complying with all the requirements of the contract plans and specifications.

SUBMITTAL REGISTER
(ER 415 1-10)

CONTRACT NO. DACA56-98-B-0017

TITLE AND LOCATION: Two Company Fire Station, Fort Sill, OK

CONTRACTOR:

SPECIFICATION SECTION: 02210

ACTIVITY NO. a.	TRANS-MITTAL NO. b.	ITEM NO. c.	SPECIFICATION PARAGRAPH NUMBER d.	DESCRIPTION OF ITEM SUBMITTED e.	TYPE OF SUBMITTAL: DATA f.	DRAWINGS g.	INSTRUCTIONS h.	SCHEDULES i.	STATEMENTS j.	REPORTS k.	CERTIFICATION l.	SAMPLES m.	RECORDS n.	CLASSIFICATION: INFORMATION ONLY o.	GOVERNMENT APPROVED p.	REVIEWER q.	CONTRACTOR SCHEDULE DATES: SUBMIT r.	APPROVAL NEEDED BY s.	MATERIAL NEEDED BY t.	CONTRACTOR ACTION: CODE u.	DATE v.	SUBMIT TO GOVERNMENT w.	GOVERNMENT ACTION: CODE x.	DATE y.	REMARKS z.
			3.10	Field Testing Control					X						FIO										
			1.2.1	Satisfactory Materials						X					FIO										
			3.10	Field Testing Control						X					FIO										

SUBMITTAL REGISTER
(ER 415 1-10)

CONTRACT NO. DACA56-98-B-0017

TITLE AND LOCATION: Two Company Fire Station, Fort Sill, OK

CONTRACTOR:

SPECIFICATION SECTION: 02221

ACTIVITY NO. a.	TRANS-MITTAL NO. b.	ITEM NO c.	SPECIFICATION PARAGRAPH NUMBER d.	DESCRIPTION OF ITEM SUBMITTED e.	TYPE OF SUBMITTAL: DATA f.	DRAWINGS g.	INSTRUCTIONS h.	SCHEDULES i.	STATEMENTS j.	REPORTS k.	CERTIFICATION l.	SAMPLES m.	RECORDS n.	CLASSIFICATION: INFORMATION ONLY o.	GOVERNMENT APPROVED p.	REVIEWER q.	CONTRACTOR SCHEDULE DATES: SUBMIT r.	APPROVAL NEEDED BY s.	MATERIAL NEEDED BY t.	CONTRACTOR ACTION: CODE u.	DATE v.	SUBMIT TO GOVERNMENT w.	GOVERNMENT ACTION: CODE x.	DATE y.	REMARKS z.
			1.3	Field Density Tests						X															
			1.3	Testing of Backfill Materials						X					GA										

SUBMITTAL REGISTER
(ER 415 1-10)

CONTRACT NO. DACA56-98-B-0017

TITLE AND LOCATION: Two Company Fire Station, Fort Sill, OK

CONTRACTOR:

SPECIFICATION SECTION: 02222

ACTIVITY NO. a.	TRANS-MITTAL NO. b.	ITEM NO. c.	SPECIFICATION PARAGRAPH NUMBER d.	DESCRIPTION OF ITEM SUBMITTED e.	TYPE OF SUBMITTAL: DATA f.	DRAWINGS g.	INSTRUCTIONS h.	SCHEDULES i.	STATEMENTS j.	REPORTS k.	CERTIFICATION l.	SAMPLES m.	RECORDS n.	CLASSIFICATION: INFORMATION ONLY o.	GOVERNMENT APPROVED p.	REVIEWER q.	CONTRACTOR SCHEDULE DATES: SUBMIT r.	APPROVAL NEEDED BY s.	MATERIAL NEEDED BY t.	CONTRACTOR ACTION: CODE u.	DATE v.	SUBMIT TO GOVERNMENT w.	GOVERNMENT ACTION: CODE x.	DATE y.	REMARKS z.
			3.4.3	Field Density Tests						X				FIO											
			3.4.2	Testing of Backfill Materials						X					GA										

SUBMITTAL REGISTER
(ER 415 1-10)

CONTRACT NO. DACA56-98-B-0017

TITLE AND LOCATION: Two Company Fire Station, Fort Sill, OK

CONTRACTOR:

SPECIFICATION SECTION: 02225

ACTIVITY NO. a.	TRANS-MITTAL NO. b.	ITEM NO c.	SPECIFICATION PARAGRAPH NUMBER d.	DESCRIPTION OF ITEM SUBMITTED e.	TYPE OF SUBMITTAL: DATA f.	DRAWINGS g.	INSTRUCTIONS h.	SCHEDULES i.	STATEMENTS j.	REPORTS k.	CERTIFICATION l.	SAMPLES m.	RECORDS n.	CLASSIFICATION: INFORMATION ONLY o.	GOVERNMENT APPROVED p.	REVIEWER q.	CONTRACTOR SCHEDULE DATES: SUBMIT r.	APPROVAL NEEDED BY s.	MATERIAL NEEDED BY t.	CONTRACTOR ACTION: CODE u.	DATE v.	SUBMIT TO GOVERNMENT w.	GOVERNMENT ACTION: CODE x.	DATE y.	REMARKS z.
			1.3	Earthwork					X					FIO											
			1.3	Testing						X				FIO											
			1.3	Testing							X				GA										
			1.3	Earthwork									X	FIO											

SUBMITTAL REGISTER
(ER 415 1-10)

CONTRACT NO. DACA56-98-B-0017

TITLE AND LOCATION: Two Company Fire Station, Fort Sill, OK

CONTRACTOR:

SPECIFICATION SECTION: 02241

ACTIVITY NO. a.	TRANS-MITTAL NO. b.	ITEM NO c.	SPECIFICATION PARAGRAPH NUMBER d.	DESCRIPTION OF ITEM SUBMITTED e.	TYPE OF SUBMITTAL: DATA f.	DRAWINGS g.	INSTRUCTIONS h.	SCHEDULES i.	STATEMENTS j.	REPORTS k.	CERTIFICATION l.	SAMPLES m.	RECORDS n.	CLASSIFICATION: INFORMATION ONLY o.	GOVERNMENT APPROVED p.	REVIEWER q.	CONTRACTOR SCHEDULE DATES: SUBMIT r.	APPROVAL NEEDED BY s.	MATERIAL NEEDED BY t.	CONTRACTOR ACTION: CODE u.	DATE v.	SUBMIT TO GOVERNMENT w.	GOVERNMENT ACTION: CODE x.	DATE y.	REMARKS z.
			1.3	Plant, Equipment, Machines, and	X									FIO											
				Tools																					
			1.3	Field Density						X				FIO											
			1.3	Sampling and Testing						X				FIO											
			1.3	Coarse Aggregate									X	FIO											

SUBMITTAL REGISTER
(ER 415 1-10)

CONTRACT NO. DACA56-98-B-0017

TITLE AND LOCATION: Two Company Fire Station, Fort Sill, OK

CONTRACTOR:

SPECIFICATION SECTION: 02245

ACTIVITY NO. a.	TRANS-MITTAL NO. b.	ITEM NO c.	SPECIFICATION PARAGRAPH NUMBER d.	DESCRIPTION OF ITEM SUBMITTED e.	TYPE OF SUBMITTAL: DATA f.	DRAWINGS g.	INSTRUCTIONS h.	SCHEDULES i.	STATEMENTS j.	REPORTS k.	CERTIFICATION l.	SAMPLES m.	RECORDS n.	CLASSIFICATION: INFORMATION ONLY o.	GOVERNMENT APPROVED p.	REVIEWER q.	CONTRACTOR SCHEDULE DATES: SUBMIT r.	APPROVAL NEEDED BY s.	MATERIAL NEEDED BY t.	CONTRACTOR ACTION: CODE u.	DATE v.	SUBMIT TO GOVERNMENT w.	GOVERNMENT ACTION: CODE x.	DATE y.	REMARKS z.
			1.4	Test Reports						X				FIO											

SUBMITTAL REGISTER
(ER 415 1-10)

CONTRACT NO. DACA56-98-B-0017

TITLE AND LOCATION: Two Company Fire Station, Fort Sill, OK

CONTRACTOR:

SPECIFICATION SECTION: 02511

ACTIVITY NO. a.	TRANS-MITTAL NO. b.	ITEM NO c.	SPECIFICATION PARAGRAPH NUMBER d.	DESCRIPTION OF ITEM SUBMITTED e.	TYPE OF SUBMITTAL: DATA f.	DRAWINGS g.	INSTRUCTIONS h.	SCHEDULES i.	STATEMENTS j.	REPORTS k.	CERTIFICATION l.	SAMPLES m.	RECORDS n.	CLASSIFICATION: INFORMATION ONLY o.	GOVERNMENT APPROVED p.	REVIEWER q.	CONTRACTOR SCHEDULE DATES: SUBMIT r.	APPROVAL NEEDED BY s.	MATERIAL NEEDED BY t.	CONTRACTOR ACTION: CODE u.	DATE v.	SUBMIT TO GOVERNMENT w.	GOVERNMENT ACTION: CODE x.	DATE y.	REMARKS z.
			1.2	Field Quality Control						X				FIO											
			1.2	Concrete									X	FIO											

SUBMITTAL REGISTER
(ER 415 1-10)

CONTRACT NO. DACA56-98-B-0017

TITLE AND LOCATION: Two Company Fire Station, Fort Sill, OK

CONTRACTOR:

SPECIFICATION SECTION: 02580

ACTIVITY NO. a.	TRANS-MITTAL NO. b.	ITEM NO. c.	SPECIFICATION PARAGRAPH NUMBER d.	DESCRIPTION OF ITEM SUBMITTED e.	TYPE OF SUBMITTAL: DATA f.	DRAWINGS g.	INSTRUCTIONS h.	SCHEDULES i.	STATEMENTS j.	REPORTS k.	CERTIFICATION l.	SAMPLES m.	RECORDS n.	CLASSIFICATION: INFORMATION ONLY o.	GOVERNMENT APPROVED p.	REVIEWER q.	CONTRACTOR SCHEDULE DATES: SUBMIT r.	APPROVAL NEEDED BY s.	MATERIAL NEEDED BY t.	CONTRACTOR ACTION: CODE u.	DATE v.	SUBMIT TO GOVERNMENT w.	GOVERNMENT ACTION: CODE x.	DATE y.	REMARKS z.
			1.2	Volatile Organic Compound (VOC)							X			FIO											
				Content																					

SUBMITTAL REGISTER
(ER 415 1-10)

CONTRACT NO. DACA56-98-B-0017

TITLE AND LOCATION: Two Company Fire Station, Fort Sill, OK

CONTRACTOR:

SPECIFICATION SECTION: 02592

ACTIVITY NO. a.	TRANS-MITTAL NO. b.	ITEM NO c.	SPECIFICATION PARAGRAPH NUMBER d.	DESCRIPTION OF ITEM SUBMITTED e.	TYPE OF SUBMITTAL: DATA f.	DRAWINGS g.	INSTRUCTIONS h.	SCHEDULES i.	STATEMENTS j.	REPORTS k.	CERTIFICATION l.	SAMPLES m.	RECORDS n.	CLASSIFICATION: INFORMATION ONLY o.	GOVERNMENT APPROVED p.	REVIEWER q.	CONTRACTOR SCHEDULE DATES: SUBMIT r.	APPROVAL NEEDED BY s.	MATERIAL NEEDED BY t.	CONTRACTOR ACTION: CODE u.	DATE v.	SUBMIT TO GOVERNMENT w.	GOVERNMENT ACTION: CODE x.	DATE y.	REMARKS z.
			1.2	Manufacturer's Recommendations			X							FIO											

SUBMITTAL REGISTER
(ER 415 1-10)

CONTRACT NO. DACA56-98-B-0017

TITLE AND LOCATION: Two Company Fire Station, Fort Sill, OK

CONTRACTOR:

SPECIFICATION SECTION: 02660

ACTIVITY NO. a.	TRANS-MITTAL NO. b.	ITEM NO. c.	SPECIFICATION PARAGRAPH NUMBER d.	DESCRIPTION OF ITEM SUBMITTED e.	TYPE OF SUBMITTAL: DATA f.	DRAWINGS g.	INSTRUCTIONS h.	SCHEDULES i.	STATEMENTS j.	REPORTS k.	CERTIFICATION l.	SAMPLES m.	RECORDS n.	CLASSIFICATION: INFORMATION ONLY o.	GOVERNMENT APPROVED p.	REVIEWER q.	CONTRACTOR SCHEDULE DATES: SUBMIT r.	APPROVAL NEEDED BY s.	MATERIAL NEEDED BY t.	CONTRACTOR ACTION: CODE u.	DATE v.	SUBMIT TO GOVERNMENT w.	GOVERNMENT ACTION: CODE x.	DATE y.	REMARKS z.
			1.3	Installation			X							FIO											
			1.3	Satisfactory Installation					X					FIO											
			1.3	Waste Water Disposal Method					X						GA										
			1.3	Bacteriological Disinfection						X				FIO											

SUBMITTAL REGISTER
(ER 415 1-10)

CONTRACT NO. DACA56-98-B-0017

TITLE AND LOCATION: Two Company Fire Station, Fort Sill, OK

CONTRACTOR:

SPECIFICATION SECTION: 02685

ACTIVITY NO. a.	TRANS-MITTAL NO. b.	ITEM NO c.	SPECIFICATION PARAGRAPH NUMBER d.	DESCRIPTION OF ITEM SUBMITTED e.	TYPE OF SUBMITTAL: DATA f.	DRAWINGS g.	INSTRUCTIONS h.	SCHEDULES i.	STATEMENTS j.	REPORTS k.	CERTIFICATION l.	SAMPLES m.	RECORDS n.	CLASSIFICATION: INFORMATION ONLY o.	GOVERNMENT APPROVED p.	REVIEWER q.	CONTRACTOR SCHEDULE DATES: SUBMIT r.	APPROVAL NEEDED BY s.	MATERIAL NEEDED BY t.	CONTRACTOR ACTION: CODE u.	DATE v.	SUBMIT TO GOVERNMENT w.	GOVERNMENT ACTION: CODE x.	DATE y.	REMARKS z.
			1.3	Pipe, Fittings, and Associated		X								FIO											
				Materials																					
			1.3	Notification				X						FIO											
			1.3	Equipment and Materials				X						FIO											
			1.3	Connection and Abandonment					X						GA										
				Procedures																					
			1.3	Training					X					FIO											
			1.3	Welding Steel Piping					X					FIO											
			1.3	Jointing Polyethylene Piping					X						GA										

SUBMITTAL REGISTER
(ER 415 1-10)

CONTRACT NO. DACA56-98-B-0017

TITLE AND LOCATION: Two Company Fire Station, Fort Sill, OK

CONTRACTOR:

SPECIFICATION SECTION: 02711

ACTIVITY NO. a.	TRANS-MITTAL NO. b.	ITEM NO c.	SPECIFICATION PARAGRAPH NUMBER d.	DESCRIPTION OF ITEM SUBMITTED e.	TYPE OF SUBMITTAL: DATA f.	DRAWINGS g.	INSTRUCTIONS h.	SCHEDULES i.	STATEMENTS j.	REPORTS k.	CERTIFICATION l.	SAMPLES m.	RECORDS n.	CLASSIFICATION: INFORMATION ONLY o.	GOVERNMENT APPROVED p.	REVIEWER q.	CONTRACTOR SCHEDULE DATES: SUBMIT r.	APPROVAL NEEDED BY s.	MATERIAL NEEDED BY t.	CONTRACTOR ACTION: CODE u.	DATE v.	SUBMIT TO GOVERNMENT w.	GOVERNMENT ACTION: CODE x.	DATE y.	REMARKS z.
			1.2	Materials							X			FIO											

SUBMITTAL REGISTER
(ER 415 1-10)

CONTRACT NO. DACA56-98-B-0017

TITLE AND LOCATION: Two Company Fire Station, Fort Sill, OK

CONTRACTOR:

SPECIFICATION SECTION: 02720

ACTIVITY NO. a.	TRANS-MITTAL NO. b.	ITEM NO c.	SPECIFICATION PARAGRAPH NUMBER d.	DESCRIPTION OF ITEM SUBMITTED e.	TYPE OF SUBMITTAL: DATA f.	DRAWINGS g.	INSTRUCTIONS h.	SCHEDULES i.	STATEMENTS j.	REPORTS k.	CERTIFICATION l.	SAMPLES m.	RECORDS n.	CLASSIFICATION: INFORMATION ONLY o.	GOVERNMENT APPROVED p.	REVIEWER q.	CONTRACTOR SCHEDULE DATES: SUBMIT r.	APPROVAL NEEDED BY s.	MATERIAL NEEDED BY t.	CONTRACTOR ACTION: CODE u.	DATE v.	SUBMIT TO GOVERNMENT w.	GOVERNMENT ACTION: CODE x.	DATE y.	REMARKS z.
			1.2	Placing Pipe			X							FIO											

SUBMITTAL REGISTER
(ER 415 1-10)

CONTRACT NO. DACA56-98-B-0017

TITLE AND LOCATION: Two Company Fire Station, Fort Sill, OK

CONTRACTOR:

SPECIFICATION SECTION: 02754

ACTIVITY NO a.	TRANS-MITTAL NO. b.	ITEM NO c.	SPECIFICATION PARAGRAPH NUMBER d.	DESCRIPTION OF ITEM SUBMITTED e.	TYPE OF SUBMITTAL: DATA f.	DRAWINGS g.	INSTRUCTIONS h.	SCHEDULES i.	STATEMENTS j.	REPORTS k.	CERTIFICATION l.	SAMPLES m.	RECORDS n.	CLASSIFICATION: INFORMATION ONLY o.	GOVERNMENT APPROVED p.	REVIEWER q.	CONTRACTOR SCHEDULE DATES: SUBMIT r.	APPROVAL NEEDED BY s.	MATERIAL NEEDED BY t.	CONTRACTOR ACTION: CODE u.	DATE v.	SUBMIT TO GOVERNMENT w.	GOVERNMENT ACTION: CODE x.	DATE y.	REMARKS z.
			1.6	Equipment	X									FIO											
			1.6	Paving				X						FIO											
			1.6	Mixture Proportions					X						GA										

SUBMITTAL REGISTER
(ER 415 1-10)

CONTRACT NO. DACA56-98-B-0017

TITLE AND LOCATION: Two Company Fire Station, Fort Sill, OK

CONTRACTOR:

SPECIFICATION SECTION: 02935

ACTIVITY NO. a.	TRANS-MITTAL NO. b.	ITEM NO c.	SPECIFICATION PARAGRAPH NUMBER d.	DESCRIPTION OF ITEM SUBMITTED e.	TYPE OF SUBMITTAL: DATA f.	DRAWINGS g.	INSTRUCTIONS h.	SCHEDULES i.	STATEMENTS j.	REPORTS k.	CERTIFICATION l.	SAMPLES m.	RECORDS n.	CLASSIFICATION: INFORMATION ONLY o.	GOVERNMENT APPROVED p.	REVIEWER q.	CONTRACTOR SCHEDULE DATES: SUBMIT r.	APPROVAL NEEDED BY s.	MATERIAL NEEDED BY t.	CONTRACTOR ACTION: CODE u.	DATE v.	SUBMIT TO GOVERNMENT w.	GOVERNMENT ACTION: CODE x.	DATE y.	REMARKS z.
			1.2	Manufacturer's Literature	X																				
			1.2	Equipment List				X							FIO										
			1.2	Delivery					X						FIO										
			1.2	Application of Pesticide					X						FIO										
			1.2	Maintenance Report					X						FIO										
			1.2	Turf Establishment Period					X						FIO										
			1.2	Sod							X				FIO										
			1.2	Fertilizer							X				FIO										
			1.2	Agicultural Limestone							X				FIO										
			1.2	Pesticide Material							X				FIO										
			1.2	Topsoil							X				FIO										

SUBMITTAL REGISTER
(ER 415 1-10)

CONTRACT NO. DACA56-98-B-0017

TITLE AND LOCATION: Two Company Fire Station, Fort Sill, OK

CONTRACTOR:

SPECIFICATION SECTION: 02950

ACTIVITY NO. a.	TRANS-MITTAL NO. b.	ITEM NO c.	SPECIFICATION PARAGRAPH NUMBER d.	DESCRIPTION OF ITEM SUBMITTED e.	TYPE OF SUBMITTAL: DATA f.	DRAWINGS g.	INSTRUCTIONS h.	SCHEDULES i.	STATEMENTS j.	REPORTS k.	CERTIFICATION l.	SAMPLES m.	RECORDS n.	CLASSIFICATION: INFORMATION ONLY o.	GOVERNMENT APPROVED p.	REVIEWER q.	CONTRACTOR SCHEDULE DATES: SUBMIT r.	APPROVAL NEEDED BY s.	MATERIAL NEEDED BY t.	CONTRACTOR ACTION: CODE u.	DATE v.	SUBMIT TO GOVERNMENT w.	GOVERNMENT ACTION: CODE x.	DATE y.	REMARKS z.
			1.2	Edging Material	X									FIO											
			1.2	Application of Pesticide Material				X						FIO											
			1.2	Delivery					X					FIO											
			1.2	Application of Pesticide Material					X					FIO											
			1.2	Percolation Test						X				FIO											
			1.2	Soil Test						X				FIO											
			1.2	Pesticide							X			FIO											
			1.2	Plants							X			FIO											
			1.2	Soil Amendments							X			FIO											
			1.2	Topsoil							X			FIO											
			1.2	Maintenance Report									X	FIO											
			1.2	Maintenance Instructions									X	FIO											
			1.2	Plant Establishment Period									X	FIO											

SUBMITTAL REGISTER
(ER 415 1-10)

CONTRACT NO. DACA56-98-B-0017

TITLE AND LOCATION: Two Company Fire Station, Fort Sill, OK

CONTRACTOR:

SPECIFICATION SECTION: 03100

ACTIVITY NO. a.	TRANS-MITTAL NO. b.	ITEM NO. c.	SPECIFICATION PARAGRAPH NUMBER d.	DESCRIPTION OF ITEM SUBMITTED e.	TYPE OF SUBMITTAL: DATA f.	DRAWINGS g.	INSTRUCTIONS h.	SCHEDULES i.	STATEMENTS j.	REPORTS k.	CERTIFICATION l.	SAMPLES m.	RECORDS n.	CLASSIFICATION: INFORMATION ONLY o.	GOVERNMENT APPROVED p.	REVIEWER q.	CONTRACTOR SCHEDULE DATES: SUBMIT r.	APPROVAL NEEDED BY s.	MATERIAL NEEDED BY t.	CONTRACTOR ACTION: CODE u.	DATE v.	SUBMIT TO GOVERNMENT w.	GOVERNMENT ACTION: CODE x.	DATE y.	REMARKS z.
			1.2	Concrete Formwork	X									FIO											
			1.2	Concrete Formwork		X								FIO											
			1.2	Form Releasing Agents			X							FIO											

SUBMITTAL REGISTER
(ER 415 1-10)

CONTRACT NO. DACA56-98-B-0017

TITLE AND LOCATION: Two Company Fire Station, Fort Sill, OK

CONTRACTOR:

SPECIFICATION SECTION: 03200

ACTIVITY NO. a.	TRANS-MITTAL NO. b.	ITEM NO c.	SPECIFICATION PARAGRAPH NUMBER d.	DESCRIPTION OF ITEM SUBMITTED e.	TYPE OF SUBMITTAL: DATA f.	DRAWINGS g.	INSTRUCTIONS h.	SCHEDULES i.	STATEMENTS j.	REPORTS k.	CERTIFICATION l.	SAMPLES m.	RECORDS n.	CLASSIFICATION: INFORMATION ONLY o.	GOVERNMENT APPROVED p.	REVIEWER q.	CONTRACTOR SCHEDULE DATES: SUBMIT r.	APPROVAL NEEDED BY s.	MATERIAL NEEDED BY t.	CONTRACTOR ACTION: CODE u.	DATE v.	SUBMIT TO GOVERNMENT w.	GOVERNMENT ACTION: CODE x.	DATE y.	REMARKS z.
			1.2	Concrete Reinforcement System		X									GA										
			1.2	Reinforcing Steel							X				GA										

SUBMITTAL REGISTER
(ER 415 1-10)

CONTRACT NO. DACA56-98-B-0017

TITLE AND LOCATION: Two Company Fire Station, Fort Sill, OK

CONTRACTOR:

SPECIFICATION SECTION: 03300

ACTIVITY NO a.	TRANS-MITTAL NO. b.	ITEM NO c.	SPECIFICATION PARAGRAPH NUMBER d.	DESCRIPTION OF ITEM SUBMITTED e.	TYPE OF SUBMITTAL: DATA f.	DRAWINGS g.	INSTRUCTIONS h.	SCHEDULES i.	STATEMENTS j.	REPORTS k.	CERTIFICATION l.	SAMPLES m.	RECORDS n.	CLASSIFICATION: INFORMATION ONLY o.	GOVERNMENT APPROVED p.	REVIEWER q.	CONTRACTOR SCHEDULE DATES: SUBMIT r.	APPROVAL NEEDED BY s.	MATERIAL NEEDED BY t.	CONTRACTOR ACTION: CODE u.	DATE v.	SUBMIT TO GOVERNMENT w.	GOVERNMENT ACTION: CODE x.	DATE y.	REMARKS z.
			1.2	Mixture Proportions					X						GA										
			1.2	Testing and Inspection						X					GA										
				Contractor QC																					

SUBMITTAL REGISTER
(ER 415 1-10)

CONTRACT NO. DACA56-98-B-0017

TITLE AND LOCATION: Two Company Fire Station, Fort Sill, OK

CONTRACTOR:

SPECIFICATION SECTION: 04200

ACTIVITY NO. a.	TRANS-MITTAL NO. b.	ITEM NO c.	SPECIFICATION PARAGRAPH NUMBER d.	DESCRIPTION OF ITEM SUBMITTED e.	TYPE OF SUBMITTAL: DATA f.	DRAWINGS g.	INSTRUCTIONS h.	SCHEDULES i.	STATEMENTS j.	REPORTS k.	CERTIFICATION l.	SAMPLES m.	RECORDS n.	CLASSIFICATION: INFORMATION ONLY o.	GOVERNMENT APPROVED p.	REVIEWER q.	CONTRACTOR SCHEDULE DATES: SUBMIT r.	APPROVAL NEEDED BY s.	MATERIAL NEEDED BY t.	CONTRACTOR ACTION: CODE u.	DATE v.	SUBMIT TO GOVERNMENT w.	GOVERNMENT ACTION: CODE x.	DATE y.	REMARKS z.
			1.2	Face Brick	X										GA										
			1.2	Cast Stone Items	X									FIO											
			3.1.2	Cold Weather Installation					X						GA										
			3.20.2	Field Testing of Grout						X					GA										
			3.20.1	Field Testing of Mortar						X					GA										
			3.20.4	Prism Tests						X					GA										
			1.2	Special Inspection						X					GA										
			1.2	Cast Stone Items							X			FIO											
			1.2	Mortar Admixtures							X			FIO											
			1.2	Reinforcing Steel Bars and Rods							X			FIO											
			1.2	Expansion-Joint Materials							X			FIO											
			1.2	Grout Admixtures							X			FIO											
			1.2	Joint Reinforcement							X			FIO											
			1.2	Anchors, ties, and Bar Positioners							X			FIO											
			1.2	Concrete Masonry units (CMU)							X			FIO											
			1.2	Control Joint Keys							X			FIO											
			1.2	Face Brick							X			FIO											
			1.2	Face Brick								X			GA										
			2.12	Anchors, Ties, and Bar Positioners								X			GA										
			1.2	Cast Stone Items								X			GA										
			1.2	Portable Panel								X			GA										
			2.13	Joint Reinforcement								X			GA										
			1.2	Expansion-Joint Material								X			GA										

SUBMITTAL REGISTER
(ER 415 1-10)

CONTRACT NO. DACA56-98-B-0017

TITLE AND LOCATION: Two Company Fire Station, Fort Sill, OK

CONTRACTOR:

SPECIFICATION SECTION: 05120

ACTIVITY NO. a.	TRANS-MITTAL NO. b.	ITEM NO c.	SPECIFICATION PARAGRAPH NUMBER d.	DESCRIPTION OF ITEM SUBMITTED e.	TYPE OF SUBMITTAL: DATA f.	DRAWINGS g.	INSTRUCTIONS h.	SCHEDULES i.	STATEMENTS j.	REPORTS k.	CERTIFICATION l.	SAMPLES m.	RECORDS n.	CLASSIFICATION: INFORMATION ONLY o.	GOVERNMENT APPROVED p.	REVIEWER q.	CONTRACTOR SCHEDULE DATES: SUBMIT r.	APPROVAL NEEDED BY s.	MATERIAL NEEDED BY t.	CONTRACTOR ACTION: CODE u.	DATE v.	SUBMIT TO GOVERNMENT w.	GOVERNMENT ACTION: CODE x.	DATE y.	REMARKS z.
			1.3	Structural Steel System		X																			
			1.3	Structural Connections		X									GA										
			3.2	Erection					X																
			1.3	Welder Qualifications							X														
			1.3	Mill Test Reports							X														

SUBMITTAL REGISTER
(ER 415 1-10)

CONTRACT NO. DACA56-98-B-0017

TITLE AND LOCATION: Two Company Fire Station, Fort Sill, OK

CONTRACTOR:

SPECIFICATION SECTION: 05210

ACTIVITY NO. a.	TRANS-MITTAL NO. b.	ITEM NO c.	SPECIFICATION PARAGRAPH NUMBER d.	DESCRIPTION OF ITEM SUBMITTED e.	TYPE OF SUBMITTAL: DATA f.	DRAWINGS g.	INSTRUCTIONS h.	SCHEDULES i.	STATEMENTS j.	REPORTS k.	CERTIFICATION l.	SAMPLES m.	RECORDS n.	CLASSIFICATION: INFORMATION ONLY o.	GOVERNMENT APPROVED p.	REVIEWER q.	CONTRACTOR SCHEDULE DATES: SUBMIT r.	APPROVAL NEEDED BY s.	MATERIAL NEEDED BY t.	CONTRACTOR ACTION: CODE u.	DATE v.	SUBMIT TO GOVERNMENT w.	GOVERNMENT ACTION: CODE x.	DATE y.	REMARKS z.
			1.2	Steel Joists		X									GA										
			1.2	Steel Joists							X			FIO											

SUBMITTAL REGISTER
(ER 415 1-10)

CONTRACT NO. DACA56-98-B-0017

TITLE AND LOCATION: Two Company Fire Station, Fort Sill, OK

CONTRACTOR:

SPECIFICATION SECTION: 05300

ACTIVITY NO a.	TRANS-MITTAL NO. b.	ITEM NO c.	SPECIFICATION PARAGRAPH NUMBER d.	DESCRIPTION OF ITEM SUBMITTED e.	TYPE OF SUBMITTAL: DATA f.	DRAWINGS g.	INSTRUCTIONS h.	SCHEDULES i.	STATEMENTS j.	REPORTS k.	CERTIFICATION l.	SAMPLES m.	RECORDS n.	CLASSIFICATION: INFORMATION ONLY o.	GOVERNMENT APPROVED p.	REVIEWER q.	CONTRACTOR SCHEDULE DATES: SUBMIT r.	APPROVAL NEEDED BY s.	MATERIAL NEEDED BY t.	CONTRACTOR ACTION: CODE u.	DATE v.	SUBMIT TO GOVERNMENT w.	GOVERNMENT ACTION: CODE x.	DATE y.	REMARKS z.
			1.2	Deck Units	X									FIO											
			1.2	Deck Units		X								FIO											
			1.2	Attachments		X									GA										
			1.2	Holes and Openings		X									GA										
			1.2	Accessories		X								FIO											
			1.2	Deck Units							X			FIO											
			1.2	Attachments							X			FIO											

SUBMITTAL REGISTER
(ER 415 1-10)

CONTRACT NO. DACA56-98-B-0017

TITLE AND LOCATION: Two Company Fire Station, Fort Sill, OK

CONTRACTOR:

SPECIFICATION SECTION: 05500

ACTIVITY NO. a.	TRANS-MITTAL NO. b.	ITEM NO c.	SPECIFICATION PARAGRAPH NUMBER d.	DESCRIPTION OF ITEM SUBMITTED e.	TYPE OF SUBMITTAL: DATA f.	DRAWINGS g.	INSTRUCTIONS h.	SCHEDULES i.	STATEMENTS j.	REPORTS k.	CERTIFICATION l.	SAMPLES m.	RECORDS n.	CLASSIFICATION: INFORMATION ONLY o.	GOVERNMENT APPROVED p.	REVIEWER q.	CONTRACTOR SCHEDULE DATES: SUBMIT r.	APPROVAL NEEDED BY s.	MATERIAL NEEDED BY t.	CONTRACTOR ACTION: CODE u.	DATE v.	SUBMIT TO GOVERNMENT w.	GOVERNMENT ACTION: CODE x.	DATE y.	REMARKS z.
			1.2	Miscellaneous Metal Items		X								FIO											

SUBMITTAL REGISTER
(ER 415 1-10)

CONTRACT NO. DACA56-98-B-0017

TITLE AND LOCATION: Two Company Fire Station, Fort Sill, OK

CONTRACTOR:

SPECIFICATION SECTION: 06400

ACTIVITY NO. a.	TRANS-MITTAL NO. b.	ITEM NO. c.	SPECIFICATION PARAGRAPH NUMBER d.	DESCRIPTION OF ITEM SUBMITTED e.	TYPE OF SUBMITTAL: DATA f.	DRAWINGS g.	INSTRUCTIONS h.	SCHEDULES i.	STATEMENTS j.	REPORTS k.	CERTIFICATION l.	SAMPLES m.	RECORDS n.	CLASSIFICATION: INFORMATION ONLY o.	GOVERNMENT APPROVED p.	REVIEWER q.	CONTRACTOR SCHEDULE DATES: SUBMIT r.	APPROVAL NEEDED BY s.	MATERIAL NEEDED BY t.	CONTRACTOR ACTION: CODE u.	DATE v.	SUBMIT TO GOVERNMENT w.	GOVERNMENT ACTION: CODE x.	DATE y.	REMARKS z.
			1.3	Cabinets		X									GA										
			1.3	Vanities		X									GA										
			1.3	Milled Hardwood		X									GA										
			1.3	Cabinets							X			FIO											
			1.3	Cabinets								X		FIO											
			1.3	Window Stools								X		FIO											
			1.3	Milled Hardwood								X			GA										

SUBMITTAL REGISTER
(ER 415 1-10)

CONTRACT NO. DACA56-98-B-0017

TITLE AND LOCATION: Two Company Fire Station, Fort Sill, OK

CONTRACTOR:

SPECIFICATION SECTION: 07210

ACTIVITY NO. a.	TRANS-MITTAL NO. b.	ITEM NO c.	SPECIFICATION PARAGRAPH NUMBER d.	DESCRIPTION OF ITEM SUBMITTED e.	TYPE OF SUBMITTAL: DATA f.	DRAWINGS g.	INSTRUCTIONS h.	SCHEDULES i.	STATEMENTS j.	REPORTS k.	CERTIFICATION l.	SAMPLES m.	RECORDS n.	CLASSIFICATION: INFORMATION ONLY o.	GOVERNMENT APPROVED p.	REVIEWER q.	CONTRACTOR SCHEDULE DATES: SUBMIT r.	APPROVAL NEEDED BY s.	MATERIAL NEEDED BY t.	CONTRACTOR ACTION: CODE u.	DATE v.	SUBMIT TO GOVERNMENT w.	GOVERNMENT ACTION: CODE x.	DATE y.	REMARKS z.
			1.2	Thermal Insulation	X									FIO											
			1.2	Acoustical Insulation	X									FIO											
			1.2	Thermal Insulation							X			FIO											
			1.2	Acoustical Insulation							X			FIO											

SUBMITTAL REGISTER
(ER 415 1-10)

CONTRACT NO. DACA56-98-B-0017

TITLE AND LOCATION: Two Company Fire Station, Fort Sill, OK

CONTRACTOR:

SPECIFICATION SECTION: 07240

ACTIVITY NO. a.	TRANS-MITTAL NO. b.	ITEM NO c.	SPECIFICATION PARAGRAPH NUMBER d.	DESCRIPTION OF ITEM SUBMITTED e.	TYPE OF SUBMITTAL: DATA f.	DRAWINGS g.	INSTRUCTIONS h.	SCHEDULES i.	STATEMENTS j.	REPORTS k.	CERTIFICATION l.	SAMPLES m.	RECORDS n.	CLASSIFICATION: INFORMATION ONLY o.	GOVERNMENT APPROVED p.	REVIEWER q.	CONTRACTOR SCHEDULE DATES: SUBMIT r.	APPROVAL NEEDED BY s.	MATERIAL NEEDED BY t.	CONTRACTOR ACTION: CODE u.	DATE v.	SUBMIT TO GOVERNMENT w.	GOVERNMENT ACTION: CODE x.	DATE y.	REMARKS z.
			1.4	Exterior Insulation and Finish			X							FIO											
				System																					
			1.4	Manufacturer's Approval and License					X					FIO											
			1.4	Exterior Insulation and Finish						X				FIO											
				System																					
			1.4	Exterior Insulation and Finish								X			GA										
				System																					

SUBMITTAL REGISTER
(ER 415 1-10)

CONTRACT NO. DACA56-98-B-0017

TITLE AND LOCATION: Two Company Fire Station, Fort Sill, OK

CONTRACTOR:

SPECIFICATION SECTION: 07270

ACTIVITY NO. a.	TRANS-MITTAL NO. b.	ITEM NO c.	SPECIFICATION PARAGRAPH NUMBER d.	DESCRIPTION OF ITEM SUBMITTED e.	TYPE OF SUBMITTAL: DATA f.	DRAWINGS g.	INSTRUCTIONS h.	SCHEDULES i.	STATEMENTS j.	REPORTS k.	CERTIFICATION l.	SAMPLES m.	RECORDS n.	CLASSIFICATION: INFORMATION ONLY o.	GOVERNMENT APPROVED p.	REVIEWER q.	CONTRACTOR SCHEDULE DATES: SUBMIT r.	APPROVAL NEEDED BY s.	MATERIAL NEEDED BY t.	CONTRACTOR ACTION: CODE u.	DATE v.	SUBMIT TO GOVERNMENT w.	GOVERNMENT ACTION: CODE x.	DATE y.	REMARKS z.
			1.2	Firestopping Materials		X								FIO											
			1.2	Firestopping Materials							X			FIO											
			1.2	Installer Qualifications							X			FIO											
			1.2	Inspection							X			FIO											

SUBMITTAL REGISTER
(ER 415 1-10)

CONTRACT NO. DACA56-98-B-0017

TITLE AND LOCATION: Two Company Fire Station, Fort Sill, OK

CONTRACTOR:

SPECIFICATION SECTION: 07416

ACTIVITY NO. a.	TRANS-MITTAL NO. b.	ITEM NO c.	SPECIFICATION PARAGRAPH NUMBER d.	DESCRIPTION OF ITEM SUBMITTED e.	TYPE OF SUBMITTAL: DATA f.	DRAWINGS g.	INSTRUCTIONS h.	SCHEDULES i.	STATEMENTS j.	REPORTS k.	CERTIFICATION l.	SAMPLES m.	RECORDS n.	CLASSIFICATION: INFORMATION ONLY o.	GOVERNMENT APPROVED p.	REVIEWER q.	CONTRACTOR SCHEDULE DATES: SUBMIT r.	APPROVAL NEEDED BY s.	MATERIAL NEEDED BY t.	CONTRACTOR ACTION: CODE u.	DATE v.	SUBMIT TO GOVERNMENT w.	GOVERNMENT ACTION: CODE x.	DATE y.	REMARKS z.
			1.5	Design Analysis	X										GA										
			1.5	Structural Standing Seam Metal Roof		X									GA										
				System																					
			1.5	Qualifications					X					FIO											
			1.5	Test Report for uplift Resistance						X					GA										
				of the SSSMR																					
			1.5	Structural Standing Seam Metal Roof							X				GA										
				System																					
			1.5	Accessories								X			GA										
			1.5	Roof Panels								X			GA										
			1.5	Factory Color Finish								X			GA										
			1.5	Fasteners								X			GA										
			1.5	Insulation								X		FIO											
			1.5	Gaskets and Insulating Compounds								X		FIO											
			1.5	Sealant								X		FIO											
			1.5	Concealed Anchor Clips								X			GA										
			1.5	Purlins								X			GA										
			1.5	EPDM Rubber Boots								X		FIO											

SUBMITTAL REGISTER
(ER 415 1-10)

CONTRACT NO. DACA56-98-B-0017

TITLE AND LOCATION: Two Company Fire Station, Fort Sill, OK

CONTRACTOR:

SPECIFICATION SECTION: 07600

ACTIVITY NO. a.	TRANS-MITTAL NO. b.	ITEM NO c.	SPECIFICATION PARAGRAPH NUMBER d.	DESCRIPTION OF ITEM SUBMITTED e.	TYPE OF SUBMITTAL: DATA f.	DRAWINGS g.	INSTRUCTIONS h.	SCHEDULES i.	STATEMENTS j.	REPORTS k.	CERTIFICATION l.	SAMPLES m.	RECORDS n.	CLASSIFICATION: INFORMATION ONLY o.	GOVERNMENT APPROVED p.	REVIEWER q.	CONTRACTOR SCHEDULE DATES: SUBMIT r.	APPROVAL NEEDED BY s.	MATERIAL NEEDED BY t.	CONTRACTOR ACTION: CODE u.	DATE v.	SUBMIT TO GOVERNMENT w.	GOVERNMENT ACTION: CODE x.	DATE y.	REMARKS z.
			1.3	Materials		X									GA										

SUBMITTAL REGISTER
(ER 415 1-10)

CONTRACT NO. DACA56-98-B-0017

TITLE AND LOCATION: Two Company Fire Station, Fort Sill, OK

CONTRACTOR:

SPECIFICATION SECTION: 07900

ACTIVITY NO. a.	TRANS-MITTAL NO. b.	ITEM NO c.	SPECIFICATION PARAGRAPH NUMBER d.	DESCRIPTION OF ITEM SUBMITTED e.	TYPE OF SUBMITTAL: DATA f.	DRAWINGS g.	INSTRUCTIONS h.	SCHEDULES i.	STATEMENTS j.	REPORTS k.	CERTIFICATION l.	SAMPLES m.	RECORDS n.	CLASSIFICATION: INFORMATION ONLY o.	GOVERNMENT APPROVED p.	REVIEWER q.	CONTRACTOR SCHEDULE DATES: SUBMIT r.	APPROVAL NEEDED BY s.	MATERIAL NEEDED BY t.	CONTRACTOR ACTION: CODE u.	DATE v.	SUBMIT TO GOVERNMENT w.	GOVERNMENT ACTION: CODE x.	DATE y.	REMARKS z.
			1.2	Backing	X									FIO											
			1.2	Bond-Breaker	X									FIO											
			1.2	Sealant	X									FIO											
			1.2	Sealant							X			FIO											

SUBMITTAL REGISTER
(ER 415 1-10)

CONTRACT NO. DACA56-98-B-0017

TITLE AND LOCATION: Two Company Fire Station, Fort Sill, OK

CONTRACTOR:

SPECIFICATION SECTION: 08110

ACTIVITY NO. a.	TRANS-MITTAL NO. b.	ITEM NO. c.	SPECIFICATION PARAGRAPH NUMBER d.	DESCRIPTION OF ITEM SUBMITTED e.	TYPE OF SUBMITTAL: DATA f.	DRAWINGS g.	INSTRUCTIONS h.	SCHEDULES i.	STATEMENTS j.	REPORTS k.	CERTIFICATION l.	SAMPLES m.	RECORDS n.	CLASSIFICATION: INFORMATION ONLY o.	GOVERNMENT APPROVED p.	REVIEWER q.	CONTRACTOR SCHEDULE DATES: SUBMIT r.	APPROVAL NEEDED BY s.	MATERIAL NEEDED BY t.	CONTRACTOR ACTION: CODE u.	DATE v.	SUBMIT TO GOVERNMENT w.	GOVERNMENT ACTION: CODE x.	DATE y.	REMARKS z.
			1.2	Steel Doors and Frames		X								FIO											
			1.2	Fire Rated Doors						X				FIO											
			1.2	Fire Rated Doors							X			FIO											
			1.2	Thermal Insulated Doors							X			FIO											

SUBMITTAL REGISTER
(ER 415 1-10)

CONTRACT NO. DACA56-98-B-0017

TITLE AND LOCATION: Two Company Fire Station, Fort Sill, OK

CONTRACTOR:

SPECIFICATION SECTION: 08210

ACTIVITY NO. a.	TRANS-MITTAL NO. b.	ITEM NO. c.	SPECIFICATION PARAGRAPH NUMBER d.	DESCRIPTION OF ITEM SUBMITTED e.	TYPE OF SUBMITTAL: DATA f.	DRAWINGS g.	INSTRUCTIONS h.	SCHEDULES i.	STATEMENTS j.	REPORTS k.	CERTIFICATION l.	SAMPLES m.	RECORDS n.	CLASSIFICATION: INFORMATION ONLY o.	GOVERNMENT APPROVED p.	REVIEWER q.	CONTRACTOR SCHEDULE DATES: SUBMIT r.	APPROVAL NEEDED BY s.	MATERIAL NEEDED BY t.	CONTRACTOR ACTION: CODE u.	DATE v.	SUBMIT TO GOVERNMENT w.	GOVERNMENT ACTION: CODE x.	DATE y.	REMARKS z.
			1.3	Wood Doors and Frames		X								FIO											
			1.3	Fire Doors			X							FIO											
			1.3	Adhesives							X			FIO											

SUBMITTAL REGISTER
(ER 415 1-10)

CONTRACT NO. DACA56-98-B-0017

TITLE AND LOCATION: Two Company Fire Station, Fort Sill, OK

CONTRACTOR:

SPECIFICATION SECTION: 08360

ACTIVITY NO. a.	TRANS-MITTAL NO. b.	ITEM NO c.	SPECIFICATION PARAGRAPH NUMBER d.	DESCRIPTION OF ITEM SUBMITTED e.	TYPE OF SUBMITTAL: DATA f.	DRAWINGS g.	INSTRUCTIONS h.	SCHEDULES i.	STATEMENTS j.	REPORTS k.	CERTIFICATION l.	SAMPLES m.	RECORDS n.	CLASSIFICATION: INFORMATION ONLY o.	GOVERNMENT APPROVED p.	REVIEWER q.	CONTRACTOR SCHEDULE DATES: SUBMIT r.	APPROVAL NEEDED BY s.	MATERIAL NEEDED BY t.	CONTRACTOR ACTION: CODE u.	DATE v.	SUBMIT TO GOVERNMENT w.	GOVERNMENT ACTION: CODE x.	DATE y.	REMARKS z.
			1.3	Sectional Overhead Door Unit	X									FIO											
			1.3	Sectional Overhead Door Unit		X								FIO											
			1.3	Sectional Overhead Door Unit			X							FIO											
			1.3	Design							X			FIO											

SUBMITTAL REGISTER
(ER 415 1-10)

CONTRACT NO. DACA56-98-B-0017

TITLE AND LOCATION: Two Company Fire Station, Fort Sill, OK

CONTRACTOR:

SPECIFICATION SECTION: 08520

ACTIVITY NO a.	TRANS-MITTAL NO. b.	ITEM NO c.	SPECIFICATION PARAGRAPH NUMBER d.	DESCRIPTION OF ITEM SUBMITTED e.	TYPE OF SUBMITTAL: DATA f.	DRAWINGS g.	INSTRUCTIONS h.	SCHEDULES i.	STATEMENTS j.	REPORTS k.	CERTIFICATION l.	SAMPLES m.	RECORDS n.	CLASSIFICATION: INFORMATION ONLY o.	GOVERNMENT APPROVED p.	REVIEWER q.	CONTRACTOR SCHEDULE DATES: SUBMIT r.	APPROVAL NEEDED BY s.	MATERIAL NEEDED BY t.	CONTRACTOR ACTION: CODE u.	DATE v.	SUBMIT TO GOVERNMENT w.	GOVERNMENT ACTION: CODE x.	DATE y.	REMARKS z.
			1.3	Aluminum Windows	X									FIO											
			1.3	Aluminum Windows		X								FIO											
			1.3	Insect Screens		X								FIO											
			1.3	Aluminum Windows			X							FIO											
			1.3	Aluminum Windows						X				FIO											
			1.3	Aluminum Windows							X			FIO											
			1.3	Aluminum Windows								X			GA										

SUBMITTAL REGISTER
(ER 415 1-10)

CONTRACT NO. DACA56-98-B-0017

TITLE AND LOCATION: Two Company Fire Station, Fort Sill, OK

CONTRACTOR:

SPECIFICATION SECTION: 08700

ACTIVITY NO. a.	TRANS-MITTAL NO. b.	ITEM NO c.	SPECIFICATION PARAGRAPH NUMBER d.	DESCRIPTION OF ITEM SUBMITTED e.	TYPE OF SUBMITTAL: DATA f.	DRAWINGS g.	INSTRUCTIONS h.	SCHEDULES i.	STATEMENTS j.	REPORTS k.	CERTIFICATION l.	SAMPLES m.	RECORDS n.	CLASSIFICATION: INFORMATION ONLY o.	GOVERNMENT APPROVED p.	REVIEWER q.	CONTRACTOR SCHEDULE DATES: SUBMIT r.	APPROVAL NEEDED BY s.	MATERIAL NEEDED BY t.	CONTRACTOR ACTION: CODE u.	DATE v.	SUBMIT TO GOVERNMENT w.	GOVERNMENT ACTION: CODE x.	DATE y.	REMARKS z.
			1.2	Hardware and Accessories	X									FIO											
			1.2	Hardware Schedule				X																	
			1.2	Hardware and Accessories							X														

SUBMITTAL REGISTER
(ER 415 1-10)

CONTRACT NO. DACA56-98-B-0017

TITLE AND LOCATION: Two Company Fire Station, Fort Sill, OK

CONTRACTOR:

SPECIFICATION SECTION: 08810

ACTIVITY NO. a.	TRANS-MITTAL NO. b.	ITEM NO c.	SPECIFICATION PARAGRAPH NUMBER d.	DESCRIPTION OF ITEM SUBMITTED e.	TYPE OF SUBMITTAL: DATA f.	DRAWINGS g.	INSTRUCTIONS h.	SCHEDULES i.	STATEMENTS j.	REPORTS k.	CERTIFICATION l.	SAMPLES m.	RECORDS n.	CLASSIFICATION: INFORMATION ONLY o.	GOVERNMENT APPROVED p.	REVIEWER q.	CONTRACTOR SCHEDULE DATES: SUBMIT r.	APPROVAL NEEDED BY s.	MATERIAL NEEDED BY t.	CONTRACTOR ACTION: CODE u.	DATE v.	SUBMIT TO GOVERNMENT w.	GOVERNMENT ACTION: CODE x.	DATE y.	REMARKS z.
			1.2	Glass	X									FIO											
			1.2	Glazing Accessories	X									FIO											
			1.2	Glass							X			FIO											

SUBMITTAL REGISTER
(ER 415 1-10)

CONTRACT NO. DACA56-98-B-0017

TITLE AND LOCATION: Two Company Fire Station, Fort Sill, OK

CONTRACTOR:

SPECIFICATION SECTION: 09250

ACTIVITY NO. a.	TRANS-MITTAL NO. b.	ITEM NO c.	SPECIFICATION PARAGRAPH NUMBER d.	DESCRIPTION OF ITEM SUBMITTED e.	TYPE OF SUBMITTAL: DATA f.	DRAWINGS g.	INSTRUCTIONS h.	SCHEDULES i.	STATEMENTS j.	REPORTS k.	CERTIFICATION l.	SAMPLES m.	RECORDS n.	CLASSIFICATION: INFORMATION ONLY o.	GOVERNMENT APPROVED p.	REVIEWER q.	CONTRACTOR SCHEDULE DATES: SUBMIT r.	APPROVAL NEEDED BY s.	MATERIAL NEEDED BY t.	CONTRACTOR ACTION: CODE u.	DATE v.	SUBMIT TO GOVERNMENT w.	GOVERNMENT ACTION: CODE x.	DATE y.	REMARKS z.
			1.3	Fire-Resistant Assemblies		X								FIO											
			1.3	Control Joints		X								FIO											
			1.3	Steel Framing		X								FIO											
			1.3	Steel Framing							X			FIO											
			1.3	Fire-Rated Gypsum Board							X			FIO											
			1.3	Gypsum Wallboard							X			FIO											

SUBMITTAL REGISTER
(ER 415 1-10)

CONTRACT NO. DACA56-98-B-0017

TITLE AND LOCATION: Two Company Fire Station, Fort Sill, OK

CONTRACTOR:

SPECIFICATION SECTION: 09310

ACTIVITY NO. a.	TRANS-MITTAL NO. b.	ITEM NO. c.	SPECIFICATION PARAGRAPH NUMBER d.	DESCRIPTION OF ITEM SUBMITTED e.	TYPE OF SUBMITTAL: DATA f.	DRAWINGS g.	INSTRUCTIONS h.	SCHEDULES i.	STATEMENTS j.	REPORTS k.	CERTIFICATION l.	SAMPLES m.	RECORDS n.	CLASSIFICATION: INFORMATION ONLY o.	GOVERNMENT APPROVED p.	REVIEWER q.	CONTRACTOR SCHEDULE DATES: SUBMIT r.	APPROVAL NEEDED BY s.	MATERIAL NEEDED BY t.	CONTRACTOR ACTION: CODE u.	DATE v.	SUBMIT TO GOVERNMENT w.	GOVERNMENT ACTION: CODE x.	DATE y.	REMARKS z.
			1.2	Tile	X									FIO											
			1.2	Setting-Bed	X									FIO											
			1.2	Mortar, Grout, and Adhesive	X									FIO											
			1.2	Tile			X							FIO											
			1.2	Mortar and Grout			X							FIO											
			1.2	Tile							X			FIO											
			1.2	Mortar, Grout, and Adhesive							X			FIO											
			1.2	Accessories								X			GA										
			1.2	Tile								X			GA										
			1.2	Marble Thresholds								X			GA										

SUBMITTAL REGISTER
(ER 415 1-10)

CONTRACT NO. DACA56-98-B-0017

TITLE AND LOCATION: Two Company Fire Station, Fort Sill, OK

CONTRACTOR:

SPECIFICATION SECTION: 09445

ACTIVITY NO. a.	TRANS-MITTAL NO. b.	ITEM NO c.	SPECIFICATION PARAGRAPH NUMBER d.	DESCRIPTION OF ITEM SUBMITTED e.	TYPE OF SUBMITTAL: DATA f.	DRAWINGS g.	INSTRUCTIONS h.	SCHEDULES i.	STATEMENTS j.	REPORTS k.	CERTIFICATION l.	SAMPLES m.	RECORDS n.	CLASSIFICATION: INFORMATION ONLY o.	GOVERNMENT APPROVED p.	REVIEWER q.	CONTRACTOR SCHEDULE DATES: SUBMIT r.	APPROVAL NEEDED BY s.	MATERIAL NEEDED BY t.	CONTRACTOR ACTION: CODE u.	DATE v.	SUBMIT TO GOVERNMENT w.	GOVERNMENT ACTION: CODE x.	DATE y.	REMARKS z.
			1.3	Cleaning and Sealing	X									FIO											
			1.3	Terrazzo Floor System	X									FIO											
			1.3	Mixing, Proportioning, and Installation	X									FIO											
			1.3	Terrazzo Floor System		X								FIO											
			1.3	Terrazzo Floor System							X			FIO											
			1.3	Terrazzo Floor System								X			GA										

SUBMITTAL REGISTER
(ER 415 1-10)

CONTRACT NO. DACA56-98-B-0017

TITLE AND LOCATION: Two Company Fire Station, Fort Sill, OK

CONTRACTOR:

SPECIFICATION SECTION: 09650

ACTIVITY NO. a.	TRANS-MITTAL NO. b.	ITEM NO. c.	SPECIFICATION PARAGRAPH NUMBER d.	DESCRIPTION OF ITEM SUBMITTED e.	TYPE OF SUBMITTAL: DATA f.	DRAWINGS g.	INSTRUCTIONS h.	SCHEDULES i.	STATEMENTS j.	REPORTS k.	CERTIFICATION l.	SAMPLES m.	RECORDS n.	CLASSIFICATION: INFORMATION ONLY o.	GOVERNMENT APPROVED p.	REVIEWER q.	CONTRACTOR SCHEDULE DATES: SUBMIT r.	APPROVAL NEEDED BY s.	MATERIAL NEEDED BY t.	CONTRACTOR ACTION: CODE u.	DATE v.	SUBMIT TO GOVERNMENT w.	GOVERNMENT ACTION: CODE x.	DATE y.	REMARKS z.
			1.2	Resilient Flooring and Accessories	X									FIO											
			1.2	Resilient Flooring and Accessories								X			GA										

SUBMITTAL REGISTER
(ER 415 1-10)

CONTRACT NO. DACA56-98-B-0017

TITLE AND LOCATION: Two Company Fire Station, Fort Sill, OK

CONTRACTOR:

SPECIFICATION SECTION: 09680

ACTIVITY NO. a.	TRANS-MITTAL NO. b.	ITEM NO c.	SPECIFICATION PARAGRAPH NUMBER d.	DESCRIPTION OF ITEM SUBMITTED e.	TYPE OF SUBMITTAL: DATA f.	DRAWINGS g.	INSTRUCTIONS h.	SCHEDULES i.	STATEMENTS j.	REPORTS k.	CERTIFICATION l.	SAMPLES m.	RECORDS n.	CLASSIFICATION: INFORMATION ONLY o.	GOVERNMENT APPROVED p.	REVIEWER q.	CONTRACTOR SCHEDULE DATES: SUBMIT r.	APPROVAL NEEDED BY s.	MATERIAL NEEDED BY t.	CONTRACTOR ACTION: CODE u.	DATE v.	SUBMIT TO GOVERNMENT w.	GOVERNMENT ACTION: CODE x.	DATE y.	REMARKS z.
			1.2	Carpet and Accessories	X									FIO											
			1.2	Installation		X								FIO											
			1.2	Carpet and Accessories			X							FIO											
			1.2	Carpet and Accessories								X			GA										

SUBMITTAL REGISTER
(ER 415 1-10)

CONTRACT NO. DACA56-98-B-0017

TITLE AND LOCATION: Two Company Fire Station, Fort Sill, OK

CONTRACTOR:

SPECIFICATION SECTION: 09900

ACTIVITY NO a.	TRANS-MITTAL NO. b.	ITEM NO c.	SPECIFICATION PARAGRAPH NUMBER d.	DESCRIPTION OF ITEM SUBMITTED e.	TYPE OF SUBMITTAL: DATA f.	DRAWINGS g.	INSTRUCTIONS h.	SCHEDULES i.	STATEMENTS j.	REPORTS k.	CERTIFICATION l.	SAMPLES m.	RECORDS n.	CLASSIFICATION: INFORMATION ONLY o.	GOVERNMENT APPROVED p.	REVIEWER q.	CONTRACTOR SCHEDULE DATES: SUBMIT r.	APPROVAL NEEDED BY s.	MATERIAL NEEDED BY t.	CONTRACTOR ACTION: CODE u.	DATE v.	SUBMIT TO GOVERNMENT w.	GOVERNMENT ACTION: CODE x.	DATE y.	REMARKS z.
			1.2	Paint	X									FIO											
			1.2	Application			X							FIO											
			1.2	Mixing and Thinning			X							FIO											
			1.2	Vilotile Organic Compound (VOC)							X														
				Content																					
			1.2	Mildewcide and Insecticide							X			FIO											
			1.2	Lead							X			FIO											

SUBMITTAL REGISTER
(ER 415 1-10)

CONTRACT NO. DACA56-98-B-0017

TITLE AND LOCATION: Two Company Fire Station, Fort Sill, OK

CONTRACTOR:

SPECIFICATION SECTION: 09915

ACTIVITY NO. a.	TRANS-MITTAL NO. b.	ITEM NO c.	SPECIFICATION PARAGRAPH NUMBER d.	DESCRIPTION OF ITEM SUBMITTED e.	TYPE OF SUBMITTAL: DATA f.	DRAWINGS g.	INSTRUCTIONS h.	SCHEDULES i.	STATEMENTS j.	REPORTS k.	CERTIFICATION l.	SAMPLES m.	RECORDS n.	CLASSIFICATION: INFORMATION ONLY o.	GOVERNMENT APPROVED p.	REVIEWER q.	CONTRACTOR SCHEDULE DATES: SUBMIT r.	APPROVAL NEEDED BY s.	MATERIAL NEEDED BY t.	CONTRACTOR ACTION: CODE u.	DATE v.	SUBMIT TO GOVERNMENT w.	GOVERNMENT ACTION: CODE x.	DATE y.	REMARKS z.
			1.3	Color Board								X			GA										

SUBMITTAL REGISTER
(ER 415 1-10)

CONTRACT NO. DACA56-98-B-0017

TITLE AND LOCATION: Two Company Fire Station, Fort Sill, OK

CONTRACTOR:

SPECIFICATION SECTION: 09950

ACTIVITY NO. a.	TRANS-MITTAL NO. b.	ITEM NO c.	SPECIFICATION PARAGRAPH NUMBER d.	DESCRIPTION OF ITEM SUBMITTED e.	TYPE OF SUBMITTAL: DATA f.	DRAWINGS g.	INSTRUCTIONS h.	SCHEDULES i.	STATEMENTS j.	REPORTS k.	CERTIFICATION l.	SAMPLES m.	RECORDS n.	CLASSIFICATION: INFORMATION ONLY o.	GOVERNMENT APPROVED p.	REVIEWER q.	CONTRACTOR SCHEDULE DATES: SUBMIT r.	APPROVAL NEEDED BY s.	MATERIAL NEEDED BY t.	CONTRACTOR ACTION: CODE u.	DATE v.	SUBMIT TO GOVERNMENT w.	GOVERNMENT ACTION: CODE x.	DATE y.	REMARKS z.
			1.2	Wallcovering and Accessories	X									FIO											
			1.2	Installation			X							FIO											
			1.2	Maintenance			X							FIO											
			1.2	Wallcovering							X			FIO											
			1.2	Wallcovering and Accessories								X			GA										

SUBMITTAL REGISTER
(ER 415 1-10)

CONTRACT NO. DACA56-98-B-0017

TITLE AND LOCATION: Two Company Fire Station, Fort Sill, OK

CONTRACTOR:

SPECIFICATION SECTION: 10100

ACTIVITY NO. a.	TRANS-MITTAL NO. b.	ITEM NO c.	SPECIFICATION PARAGRAPH NUMBER d.	DESCRIPTION OF ITEM SUBMITTED e.	TYPE OF SUBMITTAL: DATA f.	DRAWINGS g.	INSTRUCTIONS h.	SCHEDULES i.	STATEMENTS j.	REPORTS k.	CERTIFICATION l.	SAMPLES m.	RECORDS n.	CLASSIFICATION: INFORMATION ONLY o.	GOVERNMENT APPROVED p.	REVIEWER q.	CONTRACTOR SCHEDULE DATES: SUBMIT r.	APPROVAL NEEDED BY s.	MATERIAL NEEDED BY t.	CONTRACTOR ACTION: CODE u.	DATE v.	SUBMIT TO GOVERNMENT w.	GOVERNMENT ACTION: CODE x.	DATE y.	REMARKS z.
			1.2	Fire Extinguishers and Cabinets	X									FIO											
			1.2	Tackboards	X									FIO											
			1.2	Tackboards		X								FIO											
			1.2	Vinyl-fabric-faced Cork Tackboards								X		FIO											
			1.2	Aluminum Frame								X		FIO											
			1.2	Tackboards								X		FIO											

SUBMITTAL REGISTER
(ER 415 1-10)

CONTRACT NO. DACA56-98-B-0017

TITLE AND LOCATION: Two Company Fire Station, Fort Sill, OK

CONTRACTOR:

SPECIFICATION SECTION: 10160

ACTIVITY NO a.	TRANS-MITTAL NO. b.	ITEM NO c.	SPECIFICATION PARAGRAPH NUMBER d.	DESCRIPTION OF ITEM SUBMITTED e.	TYPE OF SUBMITTAL: DATA f.	DRAWINGS g.	INSTRUCTIONS h.	SCHEDULES i.	STATEMENTS j.	REPORTS k.	CERTIFICATION l.	SAMPLES m.	RECORDS n.	CLASSIFICATION: INFORMATION ONLY o.	GOVERNMENT APPROVED p.	REVIEWER q.	CONTRACTOR SCHEDULE DATES: SUBMIT r.	APPROVAL NEEDED BY s.	MATERIAL NEEDED BY t.	CONTRACTOR ACTION: CODE u.	DATE v.	SUBMIT TO GOVERNMENT w.	GOVERNMENT ACTION: CODE x.	DATE y.	REMARKS z.
			1.3	Urinal Screens	X									FIO											
			1.3	Urinal Screens		X								FIO											
			1.3	Urinal Screens								X			GA										

SUBMITTAL REGISTER
(ER 415 1-10)

CONTRACT NO. DACA56-98-B-0017

TITLE AND LOCATION: Two Company Fire Station, Fort Sill, OK

CONTRACTOR:

SPECIFICATION SECTION: 10440

ACTIVITY NO a.	TRANS-MITTAL NO. b.	ITEM NO c.	SPECIFICATION PARAGRAPH NUMBER d.	DESCRIPTION OF ITEM SUBMITTED e.	TYPE OF SUBMITTAL: DATA f.	DRAWINGS g.	INSTRUCTIONS h.	SCHEDULES i.	STATEMENTS j.	REPORTS k.	CERTIFICATION l.	SAMPLES m.	RECORDS n.	CLASSIFICATION: INFORMATION ONLY o.	GOVERNMENT APPROVED p.	REVIEWER q.	CONTRACTOR SCHEDULE DATES: SUBMIT r.	APPROVAL NEEDED BY s.	MATERIAL NEEDED BY t.	CONTRACTOR ACTION: CODE u.	DATE v.	SUBMIT TO GOVERNMENT w.	GOVERNMENT ACTION: CODE x.	DATE y.	REMARKS z.
			1.3	Interior Signage	X									FIO											
			1.3	Interior Signage		X								GA											
			1.3	Interior Signage								X		GA											

SUBMITTAL REGISTER
(ER 415 1-10)

CONTRACT NO. DACA56-98-B-0017

TITLE AND LOCATION: Two Company Fire Station, Fort Sill, OK

CONTRACTOR:

SPECIFICATION SECTION: 10800

ACTIVITY NO a.	TRANS-MITTAL NO. b.	ITEM NO c.	SPECIFICATION PARAGRAPH NUMBER d.	DESCRIPTION OF ITEM SUBMITTED e.	TYPE OF SUBMITTAL: DATA f.	DRAWINGS g.	INSTRUCTIONS h.	SCHEDULES i.	STATEMENTS j.	REPORTS k.	CERTIFICATION l.	SAMPLES m.	RECORDS n.	CLASSIFICATION: INFORMATION ONLY o.	GOVERNMENT APPROVED p.	REVIEWER q.	CONTRACTOR SCHEDULE DATES: SUBMIT r.	APPROVAL NEEDED BY s.	MATERIAL NEEDED BY t.	CONTRACTOR ACTION: CODE u.	DATE v.	SUBMIT TO GOVERNMENT w.	GOVERNMENT ACTION: CODE x.	DATE y.	REMARKS z.
			1.2	Accessory Items	X									FIO											
			1.2	Finishes	X									FIO											
			1.2	Finishes								X		FIO											
			1.2	Accessory Items								X		FIO											

SUBMITTAL REGISTER
(ER 415 1-10)

CONTRACT NO. DACA56-98-B-0017

TITLE AND LOCATION: Two Company Fire Station, Fort Sill, OK

CONTRACTOR:

SPECIFICATION SECTION: 11302

ACTIVITY NO. a.	TRANS-MITTAL NO. b.	ITEM NO c.	SPECIFICATION PARAGRAPH NUMBER d.	DESCRIPTION OF ITEM SUBMITTED e.	TYPE OF SUBMITTAL: DATA f.	DRAWINGS g.	INSTRUCTIONS h.	SCHEDULES i.	STATEMENTS j.	REPORTS k.	CERTIFICATION l.	SAMPLES m.	RECORDS n.	CLASSIFICATION: INFORMATION ONLY o.	GOVERNMENT APPROVED p.	REVIEWER q.	CONTRACTOR SCHEDULE DATES: SUBMIT r.	APPROVAL NEEDED BY s.	MATERIAL NEEDED BY t.	CONTRACTOR ACTION: CODE u.	DATE v.	SUBMIT TO GOVERNMENT w.	GOVERNMENT ACTION: CODE x.	DATE y.	REMARKS z.
			1.3	Calculations	X										GA										
			1.3	Fabrication/Erection/Installation Drawings		X								FIO											

SUBMITTAL REGISTER
(ER 415 1-10)

CONTRACT NO. DACA56-98-B-0017

TITLE AND LOCATION: Two Company Fire Station, Fort Sill, OK

CONTRACTOR:

SPECIFICATION SECTION: 13080

ACTIVITY NO. a.	TRANS-MITTAL NO. b.	ITEM NO c.	SPECIFICATION PARAGRAPH NUMBER d.	DESCRIPTION OF ITEM SUBMITTED e.	TYPE OF SUBMITTAL: DATA f.	DRAWINGS g.	INSTRUCTIONS h.	SCHEDULES i.	STATEMENTS j.	REPORTS k.	CERTIFICATION l.	SAMPLES m.	RECORDS n.	CLASSIFICATION: INFORMATION ONLY o.	GOVERNMENT APPROVED p.	REVIEWER q.	CONTRACTOR SCHEDULE DATES: SUBMIT r.	APPROVAL NEEDED BY s.	MATERIAL NEEDED BY t.	CONTRACTOR ACTION: CODE u.	DATE v.	SUBMIT TO GOVERNMENT w.	GOVERNMENT ACTION: CODE x.	DATE y.	REMARKS z.
			1.3	Bracing and Coupling	X										GA										
			3.12	Lighting Fixtures in Buildings	X										GA										
			3.11	Miscellaneous Equipment	X										GA										
			3.11	Miscellaneous Equipment		X									GA										
			3.1	Bracing and Coupling		X									GA										
			3.2	Flexible Couplings or Joints		X									GA										
			3.6	Resilient Vibration Isolation Devices		X									GA										
			3.12	Lighting Fixtures in Buildings		X									GA										

SUBMITTAL REGISTER
(ER 415 1-10)

CONTRACT NO. DACA56-98-B-0017

TITLE AND LOCATION: Two Company Fire Station, Fort Sill, OK

CONTRACTOR:

SPECIFICATION SECTION: 15250

ACTIVITY NO. a.	TRANS-MITTAL NO. b.	ITEM NO c.	SPECIFICATION PARAGRAPH NUMBER d.	DESCRIPTION OF ITEM SUBMITTED e.	TYPE OF SUBMITTAL: DATA f.	DRAWINGS g.	INSTRUCTIONS h.	SCHEDULES i.	STATEMENTS j.	REPORTS k.	CERTIFICATION l.	SAMPLES m.	RECORDS n.	CLASSIFICATION: INFORMATION ONLY o.	GOVERNMENT APPROVED p.	REVIEWER q.	CONTRACTOR SCHEDULE DATES: SUBMIT r.	APPROVAL NEEDED BY s.	MATERIAL NEEDED BY t.	CONTRACTOR ACTION: CODE u.	DATE v.	SUBMIT TO GOVERNMENT w.	GOVERNMENT ACTION: CODE x.	DATE y.	REMARKS z.
			1.4	Thermal Insulation Materials								X		FIO											

SUBMITTAL REGISTER
(ER 415 1-10)

CONTRACT NO. DACA56-98-B-0017

TITLE AND LOCATION: Two Company Fire Station, Fort Sill, OK

CONTRACTOR:

SPECIFICATION SECTION: 15330

ACTIVITY NO a.	TRANS-MITTAL NO. b.	ITEM NO c.	SPECIFICATION PARAGRAPH NUMBER d.	DESCRIPTION OF ITEM SUBMITTED e.	TYPE OF SUBMITTAL: DATA f.	DRAWINGS g.	INSTRUCTIONS h.	SCHEDULES i.	STATEMENTS j.	REPORTS k.	CERTIFICATION l.	SAMPLES m.	RECORDS n.	CLASSIFICATION: INFORMATION ONLY o.	GOVERNMENT APPROVED p.	REVIEWER q.	CONTRACTOR SCHEDULE DATES: SUBMIT r.	APPROVAL NEEDED BY s.	MATERIAL NEEDED BY t.	CONTRACTOR ACTION: CODE u.	DATE v.	SUBMIT TO GOVERNMENT w.	GOVERNMENT ACTION: CODE x.	DATE y.	REMARKS z.
			1.3	Sprinkler System Equipment	X										GA										
			1.4	Hydraulic Calculations	X										GA										
			1.3	Sprinkler System Shop Drawings		X									GA										
			1.3	As-Built Drawings		X									GA										
			1.3	Test Procedures			X								GA										
			1.3	Preliminary Tests				X							GA										
			1.3	Final Test				X							GA										
			1.6	Installer Qualifications					X						GA										
			1.5	Submittal Preparer's Qualifications					X						GA										
			1.3	Contractor's Material & Test Certificates							X				GA										
			1.3	Sprinkler System											GA										

SUBMITTAL REGISTER
(ER 415 1-10)

CONTRACT NO. DACA56-98-B-0017

TITLE AND LOCATION: Two Company Fire Station, Fort Sill, OK

CONTRACTOR:

SPECIFICATION SECTION: 15400

ACTIVITY NO a.	TRANS-MITTAL NO. b.	ITEM NO c.	SPECIFICATION PARAGRAPH NUMBER d.	DESCRIPTION OF ITEM SUBMITTED e.	TYPE OF SUBMITTAL: DATA f.	DRAWINGS g.	INSTRUCTIONS h.	SCHEDULES i.	STATEMENTS j.	REPORTS k.	CERTIFICATION l.	SAMPLES m.	RECORDS n.	CLASSIFICATION: INFORMATION ONLY o.	GOVERNMENT APPROVED p.	REVIEWER q.	CONTRACTOR SCHEDULE DATES: SUBMIT r.	APPROVAL NEEDED BY s.	MATERIAL NEEDED BY t.	CONTRACTOR ACTION: CODE u.	DATE v.	SUBMIT TO GOVERNMENT w.	GOVERNMENT ACTION: CODE x.	DATE y.	REMARKS z.
			1.5	Plumbing System										FIO											
			3.4	Vibration-Absorbing Features	X									FIO											
			1.5	Electrical Schematics		X								FIO											
			1.5	Plumbing System		X								FIO											
			1.5	Plumbing System			X							FIO											
			1.5	Backflow Prevention Assembly Tests						X				FIO											
			1.5	Tests, Flushing and Sterilization						X				FIO											
			1.5	Materials and Equipment							X			FIO											

SUBMITTAL REGISTER
(ER 415 1-10)

CONTRACT NO. DACA56-98-B-0017

TITLE AND LOCATION: Two Company Fire Station, Fort Sill, OK

CONTRACTOR:

SPECIFICATION SECTION: 15488

ACTIVITY NO. a.	TRANS-MITTAL NO. b.	ITEM NO. c.	SPECIFICATION PARAGRAPH NUMBER d.	DESCRIPTION OF ITEM SUBMITTED e.	TYPE OF SUBMITTAL: DATA f.	DRAWINGS g.	INSTRUCTIONS h.	SCHEDULES i.	STATEMENTS j.	REPORTS k.	CERTIFICATION l.	SAMPLES m.	RECORDS n.	CLASSIFICATION: INFORMATION ONLY o.	GOVERNMENT APPROVED p.	REVIEWER q.	CONTRACTOR SCHEDULE DATES: SUBMIT r.	APPROVAL NEEDED BY s.	MATERIAL NEEDED BY t.	CONTRACTOR ACTION: CODE u.	DATE v.	SUBMIT TO GOVERNMENT w.	GOVERNMENT ACTION: CODE x.	DATE y.	REMARKS z.
			1.3	Qualifications	X									FIO											
			1.3	Gas Piping System		X								FIO											

SUBMITTAL REGISTER
(ER 415 1-10)

CONTRACT NO. DACA56-98-B-0017

TITLE AND LOCATION: Two Company Fire Station, Fort Sill, OK

CONTRACTOR:

SPECIFICATION SECTION: 15565

ACTIVITY NO. a.	TRANS-MITTAL NO. b.	ITEM NO. c.	SPECIFICATION PARAGRAPH NUMBER d.	DESCRIPTION OF ITEM SUBMITTED e.	TYPE OF SUBMITTAL: DATA f.	DRAWINGS g.	INSTRUCTIONS h.	SCHEDULES i.	STATEMENTS j.	REPORTS k.	CERTIFICATION l.	SAMPLES m.	RECORDS n.	CLASSIFICATION: INFORMATION ONLY o.	GOVERNMENT APPROVED p.	REVIEWER q.	CONTRACTOR SCHEDULE DATES: SUBMIT r.	APPROVAL NEEDED BY s.	MATERIAL NEEDED BY t.	CONTRACTOR ACTION: CODE u.	DATE v.	SUBMIT TO GOVERNMENT w.	GOVERNMENT ACTION: CODE x.	DATE y.	REMARKS z.
			1.2	Heating System		X								FIO											
			1.2	Heating System			X							FIO											
			1.2	Testing, Adjusting, and Balancing						X				FIO											

SUBMITTAL REGISTER
(ER 415 1-10)

CONTRACT NO. DACA56-98-B-0017

TITLE AND LOCATION: Two Company Fire Station, Fort Sill, OK

CONTRACTOR:

SPECIFICATION SECTION: 15653

ACTIVITY NO. a.	TRANS-MITTAL NO. b.	ITEM NO c.	SPECIFICATION PARAGRAPH NUMBER d.	DESCRIPTION OF ITEM SUBMITTED e.	TYPE OF SUBMITTAL: DATA f.	DRAWINGS g.	INSTRUCTIONS h.	SCHEDULES i.	STATEMENTS j.	REPORTS k.	CERTIFICATION l.	SAMPLES m.	RECORDS n.	CLASSIFICATION: INFORMATION ONLY o.	GOVERNMENT APPROVED p.	REVIEWER q.	CONTRACTOR SCHEDULE DATES: SUBMIT r.	APPROVAL NEEDED BY s.	MATERIAL NEEDED BY t.	CONTRACTOR ACTION: CODE u.	DATE v.	SUBMIT TO GOVERNMENT w.	GOVERNMENT ACTION: CODE x.	DATE y.	REMARKS z.
			1.2	Maintenance Manual										FIO											
			1.2	Operation Manual										FIO											
			1.2	Air-Conditioning System	X									FIO											
			1.2	Air-Conditioning System		X									GA										
			3.2	Tests				X						FIO											
			1.2	Tests						X					GA										
			3.2.1	System Performance Tests						X					GA										
			1.2	Air-Conditioning System							X			FIO											
			1.2	Service Organizations							X			FIO											
			1.2	Air-Conditioning System							X			FIO											

SUBMITTAL REGISTER
(ER 415 1-10)

CONTRACT NO. DACA56-98-B-0017

TITLE AND LOCATION: Two Company Fire Station, Fort Sill, OK

CONTRACTOR:

SPECIFICATION SECTION: 15895

ACTIVITY NO a.	TRANS-MITTAL NO. b.	ITEM NO c.	SPECIFICATION PARAGRAPH NUMBER d.	DESCRIPTION OF ITEM SUBMITTED e.	TYPE OF SUBMITTAL: DATA f.	DRAWINGS g.	INSTRUCTIONS h.	SCHEDULES i.	STATEMENTS j.	REPORTS k.	CERTIFICATION l.	SAMPLES m.	RECORDS n.	CLASSIFICATION: INFORMATION ONLY o.	GOVERNMENT APPROVED p.	REVIEWER q.	CONTRACTOR SCHEDULE DATES: SUBMIT r.	APPROVAL NEEDED BY s.	MATERIAL NEEDED BY t.	CONTRACTOR ACTION: CODE u.	DATE v.	SUBMIT TO GOVERNMENT w.	GOVERNMENT ACTION: CODE x.	DATE y.	REMARKS z.
			1.4	Exhaust System Manuals										FIO											
			1.4	Components and Equipment Data	X										GA										
			1.4	Exhaust Equipment		X								FIO											
			1.4	Test Procedures			X							FIO											
			1.4	Test Schedules						X				FIO											

SUBMITTAL REGISTER
(ER 415 1-10)

CONTRACT NO. DACA56-98-B-0017

TITLE AND LOCATION: Two Company Fire Station, Fort Sill, OK

CONTRACTOR:

SPECIFICATION SECTION: 15940

ACTIVITY NO. a.	TRANS-MITTAL NO. b.	ITEM NO. c.	SPECIFICATION PARAGRAPH NUMBER d.	DESCRIPTION OF ITEM SUBMITTED e.	TYPE OF SUBMITTAL: DATA f.	DRAWINGS g.	INSTRUCTIONS h.	SCHEDULES i.	STATEMENTS j.	REPORTS k.	CERTIFICATION l.	SAMPLES m.	RECORDS n.	CLASSIFICATION: INFORMATION ONLY o.	GOVERNMENT APPROVED p.	REVIEWER q.	CONTRACTOR SCHEDULE DATES: SUBMIT r.	APPROVAL NEEDED BY s.	MATERIAL NEEDED BY t.	CONTRACTOR ACTION: CODE u.	DATE v.	SUBMIT TO GOVERNMENT w.	GOVERNMENT ACTION: CODE x.	DATE y.	REMARKS z.
			1.3	Exhaust System	X									FIO											
			1.3	Exhaust System		X									GA										
			3.1.1	Exhaust System			X							FIO											
			1.3	Tests						X					GA										

SUBMITTAL REGISTER
(ER 415 1-10)

CONTRACT NO. DACA56-98-B-0017

TITLE AND LOCATION: Two Company Fire Station, Fort Sill, OK

CONTRACTOR:

SPECIFICATION SECTION: 15950

ACTIVITY NO. a.	TRANS-MITTAL NO. b.	ITEM NO c.	SPECIFICATION PARAGRAPH NUMBER d.	DESCRIPTION OF ITEM SUBMITTED e.	TYPE OF SUBMITTAL: DATA f.	DRAWINGS g.	INSTRUCTIONS h.	SCHEDULES i.	STATEMENTS j.	REPORTS k.	CERTIFICATION l.	SAMPLES m.	RECORDS n.	CLASSIFICATION: INFORMATION ONLY o.	GOVERNMENT APPROVED p.	REVIEWER q.	CONTRACTOR SCHEDULE DATES: SUBMIT r.	APPROVAL NEEDED BY s.	MATERIAL NEEDED BY t.	CONTRACTOR ACTION: CODE u.	DATE v.	SUBMIT TO GOVERNMENT w.	GOVERNMENT ACTION: CODE x.	DATE y.	REMARKS z.
			1.3	Operation Manual										FIO											
			1.3	Maintenance and Repair Manual										FIO											
			1.3	Equipment Compliance Booklet	X										GA										
			1.3	HVAC Control System		X									GA										
			1.3	Commissioning Procedures					X						GA										
			1.3	Performance Verification Test					X					FIO											
				Procedures																					
			1.3	Commissioning Report						X				FIO											
			1.3	Performance Verification Test						X				FIO											
				Report																					

SUBMITTAL REGISTER
(ER 415 1-10)

CONTRACT NO. DACA56-98-B-0017

TITLE AND LOCATION: Two Company Fire Station, Fort Sill, OK

CONTRACTOR:

SPECIFICATION SECTION: 15990

ACTIVITY NO. a.	TRANS-MITTAL NO. b.	ITEM NO c.	SPECIFICATION PARAGRAPH NUMBER d.	DESCRIPTION OF ITEM SUBMITTED e.	TYPE OF SUBMITTAL: DATA f.	DRAWINGS g.	INSTRUCTIONS h.	SCHEDULES i.	STATEMENTS j.	REPORTS k.	CERTIFICATION l.	SAMPLES m.	RECORDS n.	CLASSIFICATION: INFORMATION ONLY o.	GOVERNMENT APPROVED p.	REVIEWER q.	CONTRACTOR SCHEDULE DATES: SUBMIT r.	APPROVAL NEEDED BY s.	MATERIAL NEEDED BY t.	CONTRACTOR ACTION: CODE u.	DATE v.	SUBMIT TO GOVERNMENT w.	GOVERNMENT ACTION: CODE x.	DATE y.	REMARKS z.
			1.2	TAB Related HVAC	X									FIO											
			1.2	TAB Schematic Drawings and Report		X									GA										
				Forms																					
			1.2	TAB Procedures			X								GA										
			1.2	TAB Procedures			X								GA										
			1.2	Systems Readiness Check				X						FIO											
			1.2	TAB Execution				X							GA										
			1.2	TAB Verification				X							GA										
			1.2	TAB Specialist					X						GA										
			1.2	TAB Firm					X						GA										
			1.2	Instrument Calibration					X					FIO											
			1.2	TAB Report						X					GA										
			1.2	Systems Readiness Check Report						X					GA										
			1.2	TAB Verification Report						X					GA										
			1.2	Design Review Report						X					GA										

SUBMITTAL REGISTER
(ER 415 1-10)

CONTRACT NO. DACA56-98-B-0017

TITLE AND LOCATION: Two Company Fire Station, Fort Sill, OK

CONTRACTOR:

SPECIFICATION SECTION: 15995

ACTIVITY NO a.	TRANS-MITTAL NO. b.	ITEM NO c.	SPECIFICATION PARAGRAPH NUMBER d.	DESCRIPTION OF ITEM SUBMITTED e.	TYPE OF SUBMITTAL: DATA f.	DRAWINGS g.	INSTRUCTIONS h.	SCHEDULES i.	STATEMENTS j.	REPORTS k.	CERTIFICATION l.	SAMPLES m.	RECORDS n.	CLASSIFICATION: INFORMATION ONLY o.	GOVERNMENT APPROVED p.	REVIEWER q.	CONTRACTOR SCHEDULE DATES: SUBMIT r.	APPROVAL NEEDED BY s.	MATERIAL NEEDED BY t.	CONTRACTOR ACTION: CODE u.	DATE v.	SUBMIT TO GOVERNMENT w.	GOVERNMENT ACTION: CODE x.	DATE y.	REMARKS z.
			1.1	Commissioning Team	X										GA										
			1.1	Test Procedures			X								GA										
			1.1	Test Schedule				X							GA										
			1.1	Test Reports						X					GA										

SUBMITTAL REGISTER
(ER 415 1-10)

CONTRACT NO. DACA56-98-B-0017

TITLE AND LOCATION: Two Company Fire Station, Fort Sill, OK

CONTRACTOR:

SPECIFICATION SECTION: 16262

ACTIVITY NO a.	TRANS-MITTAL NO. b.	ITEM NO c.	SPECIFICATION PARAGRAPH NUMBER d.	DESCRIPTION OF ITEM SUBMITTED e.	TYPE OF SUBMITTAL: DATA f.	DRAWINGS g.	INSTRUCTIONS h.	SCHEDULES i.	STATEMENTS j.	REPORTS k.	CERTIFICATION l.	SAMPLES m.	RECORDS n.	CLASSIFICATION: INFORMATION ONLY o.	GOVERNMENT APPROVED p.	REVIEWER q.	CONTRACTOR SCHEDULE DATES: SUBMIT r.	APPROVAL NEEDED BY s.	MATERIAL NEEDED BY t.	CONTRACTOR ACTION: CODE u.	DATE v.	SUBMIT TO GOVERNMENT w.	GOVERNMENT ACTION: CODE x.	DATE y.	REMARKS z.
			1.3	Switches		X									GA										
			1.3	Material, Equipment, and Fixture				X							GA										
				Lists																					
			1.3	Tests						X				FIO											
			1.3	Equipment and Materials							X				GA										
			1.3	Switching Equipment							X				GA										
			1.3	Switching Equipment										FIO											

SUBMITTAL REGISTER
(ER 415 1-10)

CONTRACT NO. DACA56-98-B-0017

TITLE AND LOCATION: Two Company Fire Station, Fort Sill, OK

CONTRACTOR:

SPECIFICATION SECTION: 16264

ACTIVITY NO. a.	TRANS-MITTAL NO. b.	ITEM NO c.	SPECIFICATION PARAGRAPH NUMBER d.	DESCRIPTION OF ITEM SUBMITTED e.	TYPE OF SUBMITTAL: DATA f.	DRAWINGS g.	INSTRUCTIONS h.	SCHEDULES i.	STATEMENTS j.	REPORTS k.	CERTIFICATION l.	SAMPLES m.	RECORDS n.	CLASSIFICATION: INFORMATION ONLY o.	GOVERNMENT APPROVED p.	REVIEWER q.	CONTRACTOR SCHEDULE DATES: SUBMIT r.	APPROVAL NEEDED BY s.	MATERIAL NEEDED BY t.	CONTRACTOR ACTION: CODE u.	DATE v.	SUBMIT TO GOVERNMENT w.	GOVERNMENT ACTION: CODE x.	DATE y.	REMARKS z.
			1.4	Natural Gas Generator Set	X										GA										
			1.4	Welding	X									FIO											
			1.4	Spare Parts	X									FIO											
			1.4	Battery Charger	X										GA										
			1.4	Manufacturer's Catalog Data	X										GA										
			1.4	As-Built Drawings		X									GA										
			1.4	Layout and Shop Drawings		X									GA										
			1.4	Posted Instructions			X							FIO											
			1.4	Onsite Inspection					X						GA										
			1.4	Onsite Test					X						GA										
			1.4	Installation Procedures					X					FIO											
			1.4	Factory Test					X					FIO											
			1.4	General Qualification					X					FIO											
			1.4	Onsite Test						X					GA										
			1.4	Factory Inspections						X				FIO											
			1.4	Regulatory Compliance							X				GA										
			1.4	Emissions							X				GA										
			1.4	Operation Manual											GA										
			1.4	Maintenance Manual											GA										

SUBMITTAL REGISTER
(ER 415 1-10)

CONTRACT NO. DACA56-98-B-0017

TITLE AND LOCATION: Two Company Fire Station, Fort Sill, OK

CONTRACTOR:

SPECIFICATION SECTION: 16370

ACTIVITY NO a.	TRANS-MITTAL NO. b.	ITEM NO c.	SPECIFICATION PARAGRAPH NUMBER d.	DESCRIPTION OF ITEM SUBMITTED e.	TYPE OF SUBMITTAL: DATA f.	DRAWINGS g.	INSTRUCTIONS h.	SCHEDULES i.	STATEMENTS j.	REPORTS k.	CERTIFICATION l.	SAMPLES m.	RECORDS n.	CLASSIFICATION: INFORMATION ONLY o.	GOVERNMENT APPROVED p.	REVIEWER q.	CONTRACTOR SCHEDULE DATES: SUBMIT r.	APPROVAL NEEDED BY s.	MATERIAL NEEDED BY t.	CONTRACTOR ACTION: CODE u.	DATE v.	SUBMIT TO GOVERNMENT w.	GOVERNMENT ACTION: CODE x.	DATE y.	REMARKS z.
			1.3	Manufacturer's Catalog	X										GA										
			1.3	Material, Equipment, and Fixture Lists	X										GA										
			1.3	Electrical Distribution System		X									GA										
			1.3	As-Built Drawings		X									GA										
			1.3	Materials and Equipment							X			FIO											

SUBMITTAL REGISTER
(ER 415 1-10)

CONTRACT NO. DACA56-98-B-0017

TITLE AND LOCATION: Two Company Fire Station, Fort Sill, OK

CONTRACTOR:

SPECIFICATION SECTION: 16375

ACTIVITY NO. a.	TRANS-MITTAL NO. b.	ITEM NO. c.	SPECIFICATION PARAGRAPH NUMBER d.	DESCRIPTION OF ITEM SUBMITTED e.	TYPE OF SUBMITTAL: DATA f.	DRAWINGS g.	INSTRUCTIONS h.	SCHEDULES i.	STATEMENTS j.	REPORTS k.	CERTIFICATION l.	SAMPLES m.	RECORDS n.	CLASSIFICATION: INFORMATION ONLY o.	GOVERNMENT APPROVED p.	REVIEWER q.	CONTRACTOR SCHEDULE DATES: SUBMIT r.	APPROVAL NEEDED BY s.	MATERIAL NEEDED BY t.	CONTRACTOR ACTION: CODE u.	DATE v.	SUBMIT TO GOVERNMENT w.	GOVERNMENT ACTION: CODE x.	DATE y.	REMARKS z.
			1.3	Material, Equipment, and Fixture	X										GA										
				Lists																					
			1.3	Electrical Distribution System		X									GA										
			1.3	Tests						X				FIO											
			1.3	Materials and Equipment							X				GA										
			1.3	Qualifications							X			FIO											
			1.3	Electrical Distribution System											GA										

SUBMITTAL REGISTER
(ER 415 1-10)

CONTRACT NO. DACA56-98-B-0017

TITLE AND LOCATION: Two Company Fire Station, Fort Sill, OK

CONTRACTOR:

SPECIFICATION SECTION: 16415

ACTIVITY NO. a.	TRANS-MITTAL NO. b.	ITEM NO. c.	SPECIFICATION PARAGRAPH NUMBER d.	DESCRIPTION OF ITEM SUBMITTED e.	TYPE OF SUBMITTAL: DATA f.	DRAWINGS g.	INSTRUCTIONS h.	SCHEDULES i.	STATEMENTS j.	REPORTS k.	CERTIFICATION l.	SAMPLES m.	RECORDS n.	CLASSIFICATION: INFORMATION ONLY o.	GOVERNMENT APPROVED p.	REVIEWER q.	CONTRACTOR SCHEDULE DATES: SUBMIT r.	APPROVAL NEEDED BY s.	MATERIAL NEEDED BY t.	CONTRACTOR ACTION: CODE u.	DATE v.	SUBMIT TO GOVERNMENT w.	GOVERNMENT ACTION: CODE x.	DATE y.	REMARKS z.
			1.3	Electrical Work		X									GA										
			1.3	Materials and Equipment						X					GA										
			1.3	Telephone Installer							X				GA										

SUBMITTAL REGISTER
(ER 415 1-10)

CONTRACT NO. DACA56-98-B-0017

TITLE AND LOCATION: Two Company Fire Station, Fort Sill, OK

CONTRACTOR:

SPECIFICATION SECTION: 16640

ACTIVITY NO. a.	TRANS-MITTAL NO. b.	ITEM NO. c.	SPECIFICATION PARAGRAPH NUMBER d.	DESCRIPTION OF ITEM SUBMITTED e.	TYPE OF SUBMITTAL: DATA f.	DRAWINGS g.	INSTRUCTIONS h.	SCHEDULES i.	STATEMENTS j.	REPORTS k.	CERTIFICATION l.	SAMPLES m.	RECORDS n.	CLASSIFICATION: INFORMATION ONLY o.	GOVERNMENT APPROVED p.	REVIEWER q.	CONTRACTOR SCHEDULE DATES: SUBMIT r.	APPROVAL NEEDED BY s.	MATERIAL NEEDED BY t.	CONTRACTOR ACTION: CODE u.	DATE v.	SUBMIT TO GOVERNMENT w.	GOVERNMENT ACTION: CODE x.	DATE y.	REMARKS z.
			1.3	Cathodic Protection System	X									FIO											
			1.3	Qualifications	X									FIO											
			1.3	Cathodic Protection System		X								FIO											
			1.3	Test Measurements						X				FIO											

SECTION 01310

PROJECT SCHEDULE

PART 1 GENERAL

1.1 SUBMITTALS

Government approval is required for submittals with a "GA" designation; submittals having an "FIO" designation are for information only. The following shall be submitted in accordance with Section 01300 SUBMITTAL PROCEDURES:

SD-07 Schedules

Initial Project Schedule; GA. Preliminary Project Schedule; GA. Periodic Schedule Updates; GA.

Three copies of the schedules showing codes, values, categories, numbers, items, etc., as required.

SD-08 Statements

Qualifications; GA.

Documentation showing qualifications of personnel preparing schedule reports.

SD-09 Reports

Narrative Report; GA. Schedule Reports; GA.

Three copies of the reports showing numbers, descriptions, dates, float, starts, finishes, durations, sequences, etc., as required.

1.2 QUALIFICATIONS

The Contractor shall designate an authorized representative who shall be responsible for the preparation of all required project schedule reports. This person shall have previously created and reviewed computerized schedules. Qualifications of this individual shall be submitted to the Contracting Officer for review with the Preliminary Project Schedule submission.

PART 2 PRODUCTS (NOT APPLICABLE)

PART 3 EXECUTION

3.1 GENERAL

Pursuant to the Contract Clause, SCHEDULE FOR CONSTRUCTION CONTRACTS a Project Schedule as described below shall be prepared. The scheduling of construction shall be the responsibility of the Contractor. Contractor management personnel shall actively participate in its development. Subcontractors and suppliers working on the project should also contribute in developing and maintaining an accurate Project Schedule. The approved Project Schedule shall be used to measure the progress of the work, to aid in evaluating time extensions, and to provide the basis of all progress

payments.

3.2 BASIS FOR PAYMENT

The schedule shall be the basis for measuring Contractor progress. Lack of an approved schedule or scheduling personnel shall result in an inability of the Contracting Officer to evaluate Contractor progress for the purposes of payment. Failure of the Contractor to provide all information, as specified below, shall result in the disapproval of the entire Project Schedule submission and the inability of the Contracting Officer to evaluate Contractor progress for payment purposes. In the case where Project Schedule revisions have been directed by the Contracting Officer and those revisions have not been included in the Project Schedule, then the Contracting Officer may hold retainage up to the maximum allowed by contract, each payment period, until revisions to the Project Schedule have been made.

3.3 PROJECT SCHEDULE

The computer software system utilized by the Contractor to produce the Project Schedule shall be capable of providing all requirements of this specification. Failure of the Contractor to meet the requirements of this specification shall result in the disapproval of the schedule. Manual methods used to produce any required information shall require approval by the Contracting Officer.

3.3.1 Use of the Critical Path Method

The Critical Path Method (CPM) of network calculation shall be used to generate the Project Schedule. The Contractor shall provide the Project Schedule in either the Precedence Diagram Method (PDM) or the Arrow Diagram Method (ADM).

3.3.2 Level of Detail Required

With the exception of the initial and preliminary schedule submission, the Project Schedule shall include an appropriate level of detail. Failure to develop or update the Project Schedule or provide data to the Contracting Officer at the appropriate level of detail, as specified by the Contracting Officer, shall result in the disapproval of the schedule. The Contracting Officer will use, but is not limited to, the following conditions to determine the appropriate level of detail to be used in the Project Schedule.

3.3.2.1 Activity Durations

Contractor submissions shall be required to follow the direction of the Contracting Officer regarding reasonable activity durations. Reasonable durations are those that allow the progress of activities to be accurately determined between payment periods. A rule of thumb, that the Contractor should use, is that less than 2 percent of all non-procurement activities' Original Durations shall be greater than 20 days.

3.3.2.2 Procurement Activities

Tasks related to the procurement of long lead materials or equipment shall be included as separate activities in the project schedule. Long lead materials and equipment are those materials that have a procurement cycle of over 90 days. Examples of procurement process activities include, but

are not limited to: submittals, approvals, procurement, fabrication, delivery, installation, start-up, and testing.

3.3.2.3 Government Activities

Government and other agencies activities that could impact progress shall be shown. These activities include, but are not limited to: approvals, inspections, utility tie-in, Government Furnished Equipment (GFE) and notice to proceed for phasing requirements.

3.3.2.4 Workers Per Day

All activities shall have an estimate of the average number of workers per day that are expected to be used during the execution of the activity. If no workers are required for an activity, in the case of activities related to procurement, for example, then the activity shall be identified as using zero workers per day. The workers per day information for each activity shall be identified by the Workers Per Day Code.

3.3.2.5 Responsibility

All activities shall be identified in the project schedule by the party responsible to perform the work. Responsibility includes, but is not limited to, the subcontracting firm, contractor work force, or government agency performing a given task. Activities shall not belong to more than one responsible party. The responsible party for each activity shall be identified by the Responsibility Code.

3.3.2.6 Work Areas

All activities shall be identified in the project schedule by the work area in which the activity occurs. Activities shall not be allowed to cover more than one work area. The work area of each activity shall be identified by the Work Area Code.

3.3.2.7 Modification or Claim Number

Any activity that is added or changed by contract modification or used to justify claimed time shall be identified by a mod or claim code that changed the activity. Activities shall not belong to more than one modification or claim item. The modification or claim number of each activity shall be identified by the Mod or Claim Number.

3.3.2.8 Bid Item

All activities shall be identified in the project schedule by the Bid Item to which the activity belongs. An activity shall not contain work in more than one bid item. the bid item for each appropriate activity shall be identified by the Bid Item Code.

3.3.2.9 Phase of Work

All activities shall be identified in the project schedule by the phases of work in which the activity occurs. Activities shall not be allowed to contain work in more than one phase of work. The project phase of each activity shall be by the unique Phase of Work Code.

3.3.2.10 Category of Work

All Activities shall be identified in the project schedule according to the category of work which best describes the activity. Category of work refers, but is not limited to, to the procurement chain of activities including such items as submittals, approvals, procurement, fabrication, delivery, installation, start-up, and testing. The category of work for each activity shall be identified by the Category of Work Code.

3.3.2.11 Feature of Work

All activities shall be identified in the project schedule according to the feature of work to which the activity belongs. Feature of work refers, but is not limited to a work breakdown structure for the project. The feature of work for each activity shall be identified by the Feature of Work Code.

3.3.3 Scheduled Project Completion

The schedule interval shall extend from notice-to-proceed to the contract completion date.

3.3.3.1 Project Start Date

The schedule shall start no earlier than the date that the Notice to Proceed (NTP) was acknowledged. The Contractor shall include as the first activity in the project schedule an activity called "Start Project". The "Start Project" activity shall have: a "ES" constraint, a constraint date equal to the date that the NTP was acknowledged, and a zero day duration.

3.3.3.2 Constraint of Last Activity

Completion of the last activity in the schedule shall be constrained by the contract completion date. Calculation on project updates shall be such that if the early finish of the last activity falls after the contract completion date, then the float calculation shall reflect a negative float on the critical path. The Contractor shall include as the last activity in the project schedule an activity call "End Project". The "End Project" activity shall have: a "LF" constraint, a constraint date equal to the completion date for the project, and a zero day duration.

3.3.3.3 Early Project Completion

In the event the project schedule shows completion, the project prior to the contract completion date, the Contractor shall identify those activities that have been accelerated and/or those activities that are scheduled in parallel to support the Contractor's "early" completion. Contractor shall specifically address each of the activities noted at every project schedule update period to assist the Contracting Officer to evaluate the Contractor's ability to actually complete prior to the contract period.

3.3.4 Interim Completion Dates

Contractually specified interim completion dates shall also be constrained to show negative float if the early finish date of the last activity in that phase falls after the interim completion date.

3.3.4.1 Start Phase

The Contractor shall include as the first activity for a project phase an activity called "Start Phase X" where "X" refers to the phase of work. The "Start Phase X" activity shall have: a "ES" constraint, a constraint date equal to the date that the NTP was acknowledged, and a zero day duration.

3.3.4.2 End Phase

The Contractor shall include as the last activity in a project phase an activity called "End Phase X" where "X" refers to the phase of work. The "End Phase X" activity shall have: a "LF" constraint, a constraint date equal to the completion date for the project, and a zero day duration.

3.3.4.3 Phase X

The Contractor shall include a hammock type activity for each project phase called "Phase X" where "X:" refers to the phase of work. The "Phase X" activity shall be logically tied to the earliest and latest activities in the phase.

3.3.5 Default Progress Data Disallowed

Actual Start and Finish dates shall not be automatically updated by default mechanisms that may be included in CPM scheduling software systems. Actual Start and Finish dates on the CPM schedule shall match those dates provided from Contractor Quality Control Reports. Failure of the Contractor to document the Actual Start and Finish dates on the Daily Quality Control report for every in progress or completed activity and insure that the data contained on the Daily Quality Control reports is the sole basis for schedule updating shall result in the disapproval of the Contractor's schedule and the inability of the Contracting Officer to evaluate Contractor progress for payment purposes.

3.3.6 Out-of-Sequence Progress

Activities that have posted progress without predecessors being completed (Out-of-Sequence Progress) shall be allowed only by the case-by-case approval of the Contracting Officer. The Contracting Officer may direct that changes in schedule logic be made to correct any or all out-of-sequence work.

3.3.7 Extended Non-Work Periods

Designation of Holidays to account for non-work periods of over 5 days shall not be allowed. Non-work periods of over 5 days shall be identified by addition of activities that represent the delays. Modifications to the logic of the project schedule shall be made to link those activities that may have been impacted by the delays to the newly added delay activities.

3.3.8 Negative Lags

Lag durations contained in the project schedule shall not have a negative value.

3.4 PROJECT SCHEDULE SUBMISSIONS

The Contractor shall provide the submissions as described below. The data disk, reports, and network diagrams required for each submission are contained in paragraph SUBMISSION REQUIREMENTS.

3.4.1 Preliminary Project Schedule Submission

The Preliminary Project Schedule, defining the Contractor's planned operations for the first 60 calendar days shall be submitted for approval

within 20 calendar days after Notice to Proceed is acknowledged. The approved preliminary schedule shall be used for payment purposes not to exceed 60 calendar days after Notice to Proceed.

3.4.2 Initial Project Schedule Submission

The Initial Project Schedule shall be submitted for approval within 40 calendar days after Notice to Proceed. The schedule shall provide a reasonable sequence of activities which represent work through the entire project and shall be at a reasonable level of detail.

3.4.3 Periodic Schedule Updates

Based on the result of progress meetings, specified in "Periodic Progress Meetings," the Contractor shall submit periodic schedule updates. These submissions shall enable the Contracting Officer or to assess Contractor's progress. If the Contractor fails or refuses to furnish the information and project schedule data, which in the judgement of the Contracting Officer or authorized representative, is necessary for verifying the contractor's progress, the Contractor shall be deemed not to have provided an estimate upon which progress payment may be made.

3.4.4 Standard Activity Coding Dictionary

The Contractor shall submit, with the Initial Project Schedule, a coding scheme that shall be used throughout the project for all activity codes contained in the schedule. The coding scheme submitted shall list the values for each activity code category and translate those values into project specific designations. For example, a Responsibility Code Value, "ELE", may be identified as "Electrical Subcontractor." Activity code values shall represent the same information throughout the duration of the contract. Once approved with the Initial Project Schedule submission, changes to the activity coding scheme must be approved by the Contracting Officer.

3.5 SUBMISSION REQUIREMENTS

The following items shall be submitted by the Contractor for the initial submission, and every periodic project schedule update throughout the life of the project:

3.5.1 Data Disks

Three data disks containing the project schedule shall be provided. Data on the disks shall be in the format specified in APPENDIX A.

3.5.1.1 File Medium

Required data shall be submitted on 3.5 disks, formatted to hold 1.44 MB of data, under the MS-DOS operating system.

3.5.1.2 Disk Label

A permanent exterior label shall be affixed to each disk submitted. The label shall indicate the type of schedule (Initial, Update, or Change), full contract number, project name, project location, data date, name and telephone number or person responsible for the schedule, and the MS-DOS version used to format the disk.

3.5.1.3 File Name

Each file submitted shall have a name related to either the schedule data date, project name, or contract number. The Contractor shall develop a naming convention that will insure that the names of the files submitted are unique. the Contractor shall submit the file naming convention to the Contracting Officer for approval.

3.5.2 Narrative Report

A Narrative Report shall be provided with each update of the project schedule. This report shall be provided as the basis of the Contractor's progress payment request. The Narrative Report shall include: a description of activities along the 4 most critical paths, a description of current and anticipated problem areas or delaying factors and their impact, and an explanation of corrective actions taken.

3.5.3 Approved Changes Verification

Only project schedule changes that have been previously approved by the Contracting Officer shall be included in the schedule submission. The Narrative Report shall specifically reference, on an activity by activity basis, all changes made since the previous period and relate each change to documented, approved schedule changes.

3.5.4 Schedule Reports

The format for each activity for the schedule reports listed below shall contain: Activity Numbers, Activity Description, Original Duration, Remaining Duration, Early Start Date, Early Finish Date, Late Start Date, Late Finish Date, Total Float. Actual Start and Actual Finish Dates shall be printed for those activities in-progress or completed.

3.5.4.1 Activity Report

A list of all activities sorted according to activity number or "I-NODE" AND "J-NODE" and then sorted according to Early Start Date. For completed activities the Actual Start Date shall be used as the secondary sort.

3.5.4.2 Logic Report

A list of Preceding and Succeeding activities for every activity in ascending order by activity number and then sorted according to Early Start Date. For completed activities the Actual Start Date shall be used as the secondary sort.

3.5.4.3 Total Float Report

A list of all activities sorted in ascending order of total float. Activities which have the same amount of total float shall be listed in ascending order of Early Start Dates.

3.5.4.4 Earnings Report

A compilation of the Contractor's Total Earnings on the project from the Notice to Proceed until the most recent Monthly Progress Meeting. This report shall reflect the Earnings of specific activities based on the agreements made in the field and approved between the Contractor and Contracting Officer at the most recent Monthly Progress Meeting. Provided

that the Contractor has provided a complete schedule update, this report shall serve as the basis of determining Contractor Payment. Activities shall be grouped by bid item and sorted by activity numbers. This report shall: sum all activities in a bid item and provide a bid item percent; complete and sum all bid items to provide a total project percent complete. The printed report shall contain, for each activity: Activity Number or "i-node" and "j-node", Activity Description, Original Budgeted Amount, Total Quantity, Quantity to Date, Percent Complete (based on cost), Earnings to Date.

3.5.5 Network Diagram

The network diagram shall be required on the initial schedule submission and on monthly or quarterly schedule update submissions. The network diagram shall depict and display the order and interdependence of activities and the sequence in which the work is to be accomplished. The Contracting Officer will use, but is not limited to, the following conditions to review compliance with this paragraph:

3.5.5.1 Continuous Flow

Diagrams shall show a continuous flow from left to right with no arrows from right to left. The activity or event number, description, duration, and estimated earned value shall be shown on the diagram.

3.5.5.2 Project Milestone Dates

Dates shall be shown on the diagram for start of project, any contract required interim completion dates, and contract completion dates.

3.5.5.3 Critical Path

The critical path shall be clearly shown.

3.5.5.4 Banding

Activities shall be grouped to assist in the understanding of the activity sequence. Typically, this flow will group activities by category of work, work area and/or responsibility.

3.5.5.5 S-Curves

Earnings curves showing projected early and late earnings and earnings to date.

3.6 PERIODIC PROGRESS MEETINGS

Progress meetings to discuss payment shall include a monthly on-site meeting or other regular intervals mutually agreed to at the preconstruction conference. During this meeting the Contractor will describe, on an activity by activity basis, all proposed revisions and adjustments to the project schedule required to reflect the current status of the project. The Contracting Officer will approve activity progress, proposed revisions, and adjustments as appropriate.

3.6.1 Meeting Attendance

The Contractor's Project Manager and Scheduler shall attend the regular progress meeting.

3.6.2 Update Submission Following Progress Meeting

A complete update of the project schedule containing all approved progress, revisions, and adjustments, based on the regular progress meeting, shall be submitted not later than 4 working days after the monthly progress meeting.

3.6.3 Progress Meeting Contents

Update information, including Actual Start Dates, Actual Finish Dates, Remaining Durations, and Cost to Date shall be subject to the approval of the Contracting Officer. The following minimum set of items which the Contractor shall address, on an activity by activity basis, during each progress meeting.

3.6.3.1 Start and Finish Dates

The Actual Start and Actual Finish dates for each activity currently in-progress or completed activities.

3.6.3.2 Time Completion

The estimated Remaining Duration for each activity in-progress. Time-based progress calculations must be based on Remaining Duration for each activity.

3.6.3.3 Cost Completion

The earnings for each activity started. Payment shall be based on earnings for each in-progress or completed activity. Payment for individual activities shall not be made for work that contains quality defects. A portion of the overall project amount may be retained based on delays of activities.

3.6.3.4 Logic Changes

All logic changes pertaining to Notice to Proceed on change orders, change orders to be incorporated into the schedule, contractor proposed changes in work sequence, corrections to schedule logic for out-of-sequence progress, lag durations, and other changes that have been made pursuant to contract provisions shall be specifically identified and discussed.

3.6.3.5 Other Changes

Other changes required due to delays in completion of any activity or group of activities are those delays beyond the Contractors control such as strikes and unusual weather. Also included are delays encountered due to submittals, Government Activities, deliveries or work stoppage which makes re-planning the work necessary, and when the schedule does not represent the actual prosecution and progress of the work.

3.7 REQUESTS FOR TIME EXTENSIONS

In the event the Contractor requests an extension of the contract completion date, he shall furnish such justification, project schedule data and supporting evidence as the Contracting Officer may deem necessary for a determination as to whether or not the Contractor is entitled to an extension of time under the provisions of the contract. Submission of proof of delay, based on revised activity logic, duration, and costs (updated to the specific date that the delay occurred) is obligatory to any

approvals.

3.7.1 Justification of Delay

The project schedule must clearly display that the Contractor has used, in full, all the float time available for the work involved with this request. The Contracting Officer's determination as to the number of allowable days of contract extension, shall be based upon the project schedule updates in effect for the time period in question and other factual information. Actual delays that are found to be caused by the Contractor's own actions, which result in the extension of the schedule, shall not be a cause for a time extension to the contract completion date.

3.7.2 Submission Requirements

The Contractor shall submit a justification for each request for a change in the contract completion date of under two weeks based upon the most recent schedule update at the time of the Notice to Proceed or constructive direction issued for the change. Such a request shall be in accordance with the requirements of other appropriate Contract Clauses and shall include, as a minimum:

a. A list of affected activities, with their associated project schedule activity number.

b. A brief explanation of the causes of the change.

c. An analysis of the overall impact of the changes proposed.

d. A sub-network of the affected area.

Activities impacted in each justification for change shall be identified by a unique activity code contained in the required data file.

3.7.3 Additional Submission Requirements

For any request for time extension for over 2 weeks, the Contracting Officer may request an interim update with revised activities for a specific change request. The Contractor shall provide this disk within 4 days of the Contracting Officer's request.

3.8 DIRECTED CHANGES

If Notice to Proceed (NTP) is issued for changes prior to settlement of price and/or time, the Contractor shall submit proposed schedule revisions to the Contracting Officer within 2 weeks of the NTP being issued. The proposed revisions to the schedule will be approved by the Contracting Officer prior to inclusion of those changes within the project schedule. If the Contractor fails to submit the proposed revisions, the Contracting Officer may furnish the Contractor suggested revisions to the project schedule. The Contractor shall include these revisions in the project schedule until the Contractor submits revisions, and final changes and impacts have been negotiated. If the Contractor has any objections to the revisions furnished by the Contracting Officer, then the Contractor shall advise the Contracting Officer within 2 weeks of receipt of the revisions. Regardless of the objections, the Contractor will continue to update their schedule with the Contracting Officer's revisions until a mutual agreement in the revisions may be made. If the Contractor fails to submit alternative revisions within 2 weeks of receipt of the Contracting

Officer's proposed revisions, the Contractor will be deemed to have concurred with the Contracting Officer's proposed revisions. The proposed revisions will then be the basis for an equitable adjustment for performance of the work.

3.9 3.9 OWNERSHIP OF FLOAT

Float available in the schedule, at any time, shall not be considered for the exclusive use of either the Government or the Contractor.

APPENDIX A

DATA EXCHANGE FORMAT FOR CONTRACTOR PREPARED NAS

1. Description

The data exchange format provides a platform for exchanging scheduling and planning data between various software systems. The Data Exchange Format shall allow project management systems to share information with other programs. Scheduling information shall be transferred from the Contractor's project management system to the Government as described in this section.

2. Electronic Data Exchange

a. The Contractor shall provide schedule data in the Data Exchange Format for each Preliminary, Initial, Monthly NAS Updates, and requests for time extensions or change proposals. The Contractor's failure to provide schedule data in the format described herein shall result in disapproval of the entire schedule submission.

b. The entire set of schedule data shall be transferred at every exchange of scheduling data. Thus, for updates to existing projects, the data exchange file shall contain all activities that have not started or are already complete as well as those activities in progress.

3. Data Transfer Responsibility

The Contractor shall be responsible for Electronic Data exchange File data that may have been lost or destroyed during transit between the Contractor and the Contracting Officer. If Electronic Data Exchange File data is damaged during transit, then the Contractor shall provide the Contracting Officer with a new Electronic Data Exchange File within two working days of notification by the Contracting Officer.

4. Data Consistency Responsibility

The Contractor shall be responsible for the consistency between the Electronic Data Exchange File and printed reports which accompany schedule submissions. If Electronic Data Exchange File data for a schedule submission differs, in any way, from the printed schedule reports or standard activity coding, the Contracting Officer will disapprove the entire schedule submission. The Contractor shall provide the Contracting Officer with a completely revised and consistent schedule submission within 24 hours of notification of inconsistency by the Contracting Officer.

Creating the Electronic Data Exchange File: The Contractor may create the electronic data exchange file by one of the three following methods:

a. Commercially Available Software: Many commercially available scheduling systems support the standard data exchange format specified herein.

b. Interface Program: The Contractor shall produce his own data translation software. This software shall take the information provided by the Contractor's scheduling system and reformat the data into the Data exchange Format.

c. Manual Methods: The Contractor shall manually reformat his scheduling system report files or create all necessary data by manually entering all data into the Data exchange Format.

5. File Transfer Medium

All required data shall be submitted on 5 1/4" diskette(s), formatted to hold 360 KB of data, under the MS-DOS version 3.0 (or higher) operating system. Higher data densities and other operating systems may be approved by the Contracting Officer if compatible with the Government's computing capability,

6. File Type and Format

The data file shall consist of a 132 character, fixed format, "ASCII" file. Text shall be left-justified and numbers shall be right-justified in each field. Data records must conform, exactly, to the sequence, column position, maximum length, mandatory values, and field definitions described below to comply with this standard data exchange format. Unless specifically stated, all numbers shall be whole numbers. All data columns shall be separated by a single blank column.

7. Electronic Data Exchange File Name

The Contractor shall insure that each file has a name related to either the schedule data date, project name, or contract number. No two Electronic Data Exchange Files shall have the same name throughout the life of this contract. The Contractor shall submit his file naming convention to the Contracting Officer for approval. ln the event that the Contractor's naming convention is disapproved, the Contracting Officer shall direct the Contractor to provide files under a unique file naming convention.

8. Disc Label

The Contractor shall affix a permanent exterior label to each diskette submitted. The label shall contain the type of schedule (Preliminary, Initial, Update, or Change), full project number, project name, project location, data date, name and telephone number of the Contractor's scheduler, and the MS-DOS version used to format the diskette.

9. Standard Activity Coding Dictionary

The Contractor shall submit, with the initial schedule submission, a consistent coding scheme that shall be used throughout the project for the Activity Codes specified in this section. The coding scheme submitted shall demonstrate that each code shall only represent one type of information through the duration of the contract. Incomplete coding of activities or an incomplete coding schedule shall be sufficient for disapproval of the schedule.

10. Data Exchange File Format Organization

The Data Exchange File Format shall consist of the following records provided in the exact sequence shown below:

Record Description	Remarks

Record Description	Remarks
Volume Record	First Record on Every Data Disk
Project ID Record	Second Record
Calendar Record(s)	Minimum of One Record Required
Holiday Record(s)	Optional Record
Activity Record(s)	Mandatory Record
Precedence Records	Mandatory for Precedence Method
Unit Cost Record(s)	Optional for Unit Cost Projects
Progress Record(s)	Mandatory for Updates
File End Record	Last Record of Data File

11. Record Descriptions

a. Volume Record: The Volume Record shall be used to control the transfer of data that may not fit on a single disk. The first record in every disk used to store the data exchange file shall contain the Volume Record. The Volume Record shall sequentially identify the number of the data transfer disk(s). The Volume Record shall have the following format:

Description	Column Position	Max. len.	Reqd. Value	Type	Just.
RECORD IDENTIFIER	1- 4	4	VOLM	Fixed	
DISK NUMBER	6- 7	2		Number	Right

(1) The RECORD IDENTIFIER is the first four characters of this record. The required value for this field shall be "VOLM".

(2) The DISK NUMBER field shall identify the number of the data disk used to store the data exchange information. If all data may be contained on a single disk, this field shall contain the value of "1". If more disks are required, then the second disk shall contain the value "2", the third disk shall be designated with a "3", and so on. Identification of the last data disk shall not be accomplished with the Volume Record. Identification of the last data disk is accomplished in the PROJECT END RECORD.

b. Project ID Record: The Project ID Record is the second record of the file and shall contain project information in the following format:

Description	Column Position	Max. Len.	Reqd. Value	Type	Just.
RECORD IDENTIFIER	1- 4	4	PROJ	Fixed	
DATA DATE	6- 12	7		ddmmyy	See (2)
PROJECT IDENTIFIER	14- 17	4		Alpha.	Left
PROJECT NAME	19- 66	48		Alpha.	Left
CONTRACTOR NAME	68-103	36		Alpha.	Left
ARROW OR PRECEDENCE	105	1	A,P	Fixed	
CONTRACT NUMBER	107-112	6		Alpha.	Left
PROJECT START	114-120	7		ddmmyy	Filled
PROJECT END	122-128	7		ddmmyy	Filled

(1) The RECORD IDENTIFIER is the first four characters of this record. The required value for this field shall be "PROJ". This

record shall contain the general project information and indicates which scheduling method shall be used.

(2) The DATA DATE is the date of the schedule calculation. The abbreviation "ddmmmyy" refers to a date format that shall translate a date into two numbers for the day, three letters for the month, and two numbers for the year. For example, March 1, 1999 shall be translated into 01Mar99. This same convention for date formats shall be used throughout the entire data format. To insure that dates are translated consistently, the following abbreviations shall be used for the three character month code: JAN, FEB, MAR, APR, MAY, JUN, JUL, AUG, SEP, OCT, NOV, DEC.

(3) The PROJECT IDENTIFIER is a maximum of four character abbreviation for the schedule. These four characters shall be used to uniquely identify the project and specific update as agreed upon by the Contractor and Contracting Officer. When utilizing scheduling software these four characters shall be used to select the project. Software manufacturers' shall verify that data importing programs do not automatically overwrite other schedules with the same PROJECT IDENTIFIER.

(4) The PROJECT NAME field shall contain the name and location of the project edited to fit the space provided. The data appearing here shall appear on scheduling software reports. The abbreviation "Alpha.", used throughout paragraph: RECORD DESCRIPTIONS, refers to an "Alphanumeric" field value.

(5) The CONTRACTOR NAME field shall contain the Construction Contractor's name edited to fit the space provided.

(6) The ARROW OR PRECEDENCE field shall indicate which method shall be used for calculation of the schedule. The value "A" shall signify the Arrow Diagraming Technique. The value "P" shall signify the Precedence Diagraming technique. The ACTIVITY IDENTIFICATION field of the Activity Record shall be interpreted differently depending on the value of this field. The Precedence Record shall be required if the value of this field is "P".

(7) The CONTRACT NUMBER field shall directly identify the contract for the project. For example, a complete government construction contract number, "DACA56-93-C-0001", shall be entered into this field as "930001".

(8) The PROJECT START shall contain the date that the project will start or has started. On government construction projects, this date is the date that the construction Contractor acknowledges the Notice to Proceed.

(9) The PROJECT END shall contain the data that the contract must complete on or prior to. On Government construction projects, this date is the PROJECT START plus the contract period, typically expressed in a specific number of calendar days.

c. Calendar Record: The Calendar Record(s) shall follow the Project Identifier Record in every data file. A minimum of one Calendar Record shall be required for all data exchange activity files. The format for the Calendar Record shall be as follows:

Description	Column Position	Max. Len.	Reqd. Value	Type	Just.
RECORD IDENTIFIER	1- 4	4	CLDR	Fixed	
CALENDAR CODE	6- 6	1		Alpha.	Filled
WORKDAYS	8- 14	7	SMTWTFS	See (3)	
CALENDAR DESCRIPTION	16- 45	30		Alpha.	Left

(1) The RECORD IDENTIFIER shall always begin with "CLDR" to identify it as a Calendar Record. Each Calendar Record used shall have this identification in the first four columns.

(2) The CALENDAR CODE shall be used in the activity records to signify that this calendar is associated with the activity.

(3) The WORKDAYS field shall contain the work-week pattern selected with "Y", for Yes, and "N", for No. The first character shall be Sunday and the last character Saturday. An example of a typical five day work-week would be NYYYYYN. A seven day work-week would be YYYYYYY.

(4) The CALENDAR DESCRIPTION shall be used to briefly explain the calendar used.

d. Holiday Record: Optional Holiday Record(s) shall follow the Calendar Record(s). The Holiday Record shall be used to designate specific non-work days for a specific Calendar. More than one Holiday Record may be used for a particular calendar. If used, the following format shall be followed:

Description	Column Position	Max. Len.	Reqd. Value	Type	Just.
RECORD IDENTIFIER	1- 4	4	HOLI	Fixed	
CALENDAR CODE	6- 6	1		Alpha.	Filled
HOLIDAY DATE	8- 14	7		ddmmmyy	Filled
HOLIDAY DATE	16-22	7		ddmmmyy	Filled
HOLIDAY DATE	24-30	7		ddmmmyy	Filled
HOLIDAY DATE	32-38	7		ddmmmyy	Filled
HOLIDAY DATE	40-46	7		ddmmmyy	Filled
HOLIDAY DATE	48-54	7		ddmmmyy	Filled
HOLIDAY DATE	56-62	7		ddmmmyy	Filled
HOLIDAY DATE	64-70	7		ddmmmyy	Filled
HOLIDAY DATE	72-78	7		ddmmmyy	Filled
HOLIDAY DATE	80-86	7		ddmmmyy	Filled
HOLIDAY DATE	88-94	7		ddmmmyy	Filled
HOLIDAY DATE	96-112	7		ddmmmyy	Filled
HOLIDAY DATE	114-120	7		ddmmmyy	Filled
HOLIDAY DATE	122-128	7		ddmmmyy	Filled

(1) The RECORD IDENTIFIER shall always begin with "HOLI" and shall signify an Optional Holiday Calendar is to be used.

(2) The CALENDAR CODE indicates which work-week calendar the holidays shall be applied to. More than one HOLI record may be used for a given CALENDAR CODE.

(3) The HOLIDAY DATE is to be used for each date to be designated as a non-work day.

e. Activity Records: Activity Records shall follow any Holiday Record(s). If there are no Holiday Record(s), then the Activity Records shall follow the Calendar Record(s). There shall be one Activity Record for every activity in the network. Each activity shall have one record in the following format:

Description	Column Position	Max. Len.	Reqd. Value	Type	Just.
RECORD IDENTIFIER	1- 4	4	ACTV	Fixed	
ACTIVITY IDENTIFICATION	6- 15	10		See (2)	
ACTIVITY DESCRIPTION	17- 46	30		Alpha.	Left
ACTIVITY DURATION	48- 50	3		Integer	Right
ACTIVITY COST	52- 60	9		Integer	Right
CONSTRAINT DATE	62- 68	7			Filled
CONSTRAINT TYPE	70- 71	2		See (7)	
CALENDAR CODE	73- 73	1		Alpha.	Filled
HAMMOCK CODE	75- 75	1	Y,blank	Fixed	
WORKERS PER DAY	77- 79	3		Integer	Right
RESPONSIBILITY CODE	81- 84	4		Alpha.	Left
WORK AREA CODE	86- 89	4		Alpha.	Left
MOD OR CLAIM NUMBER	91- 94	4		Alpha.	Left
BID ITEM	96- 99	4		Alpha.	Left
UCI CODE	101-105	5		See (15)	
USER DEFINED 1	107-110	4		See (16)	
USER DEFINED 2	112-115	4		See (16)	
USER DEFINED 3	117-120	4		See (16)	
USER DEFINED 4	122-125	4		See (16)	
USER DEFINED 5	127-130	4		See (16)	

(1) The RECORD IDENTIFIER for each activity description record must begin with the four character "ACTV" code. This field shall be used for both the Arrow Diagram Method (ADM) and Precedence Diagram Method (PDM)

(2) The ACTIVITY IDENTIFICATION consists of coding that differs, depending on whether the ADM or PDM method was selected in the Project Record. If the ADM method was selected, then the field shall be interpreted as two right-justified fields of five integers each. If the PDM method was selected, the field shall be interpreted as one right-justified field of ten integers each. The maximum activity number allowed under this arrangement is 99999 for ADM and 9999999999 for the PDM method.

(3) The ACTIVITY DESCRIPTION shall be a maximum of 30 characters. Descriptions must be limited to the space provided.

(4) The ACTIVITY DURATION contains the estimated duration for the activity on the schedule. The duration shall be based upon the work-week designated by the activity's related calendar.

(5) The ACTIVITY COST contains the estimated earned value of the work to be accomplished in the activity.

(6) The CONSTRAINT DATE field shall be used to identify a date that the scheduling system may use to modify float calculations. If there is a date in this field, then there must be a valid entry in the CONSTRAINT TYPE field. The CONSTRAINT DATE shall be the

same as, or later than, the PROJECT START DATE. The CONSTRAINT DATE shall be the same as, or earlier than, the PROJECT END DATE.

(7) The CONSTRAINT TYPE field shall be used to identify the way that the scheduling system shall use the CONSTRAINT DATE to modify schedule float calculations. If there is a value in this field, then there must be a valid entry in the CONSTRAINT DATE field. Below are the minimum list of entries for the CONSTRAINT TYPE. Other types may be available from specific software manufacturers.

Code	Definition
ES	The CONSTRAINT DATE shall replace an activity's early start date, if the early start date is prior to the CONSTRAINT DATE.
LF	The CONSTRAINT DATE shall replace an activity's late finish date, if the late finish date is after the CONSTRAINT DATE.

(8) The CALENDAR CODE, as previously explained, relates this activity to an appropriate work-week calendar. The ACTIVITY DURATION must be based on the valid work-week referenced by this CALENDAR CODE field.

(9) The HAMMOCK CODE indicates that a particular activity does not have its own independent duration, but takes its start dates from the start date of the preceding activity (or node) and takes its finish dates from the finish dates of its succeeding activity (or node). If the value of the HAMMOCK ACTIVITY field is "Y", then the activity is a HAMMOCK ACTIVITY.

(10) The WORKERS PER DAY is an optional field that shall be specified at the discretion of the Field Operating Agency (FOA). This field shall contain the average number of workers expected to work on the activity each day the activity is in progress. The total duration times the average number of workers per day shall equal the Contractor's estimate of the total man days of work required to perform the activity.

(11) The RESPONSIBILITY CODE shall identify the Subcontractor or major trade involved with completing the work for the activity.

(12) The WORK AREA CODE shall identify the location of the activity within the project.

(13) The MOD OR CLAIM NUMBER code is an optional field that shall be specified at the discretion of the FOA. This code shall uniquely identify activities that are changed on a construction contract modification, or activities that justify any claimed time extensions.

(14) The BID ITEM field is an optional field that shall be specified at the discretion of the FOA. This field shall designate the bid item number associated with the activity.

(15) The Construction Specification Institute (CSI) Masterformat CODE is an optional field that shall be specified at the discretion of the FOA. The CSI CODE shall contain the value of code corresponding to the work to be accomplished in this

activity.

(16) USER DEFINED fields are optional and not required to meet the data exchange standard. They are provided to allow for a fixed expansion of capabilities for individual very large projects that may require additional fields.

f. Precedence Record: The Precedence Record(s) shall follow the Activity Records if a Precedence Type Schedule (PDM) is identified in the ARROW OR PRECEDENCE field of the Project Record. The Precedence Record has the following format:

Description	Column Position	Max. Len.	Reqd. Value	Type	Just.
RECORD IDENTIFIER	1- 4	4	PRED	Fixed	
ACTIVITY IDENTIFICATION	6- 15	10		Integer	See (2
PRECEDING ACTIVITY	17- 26	10		Integer	
PREDECESSOR TYPE	28- 29	2		See (4)	
LAG DURATION	31- 34	4		Integer	Right

(1) The RECORD IDENTIFIER shall begin with the four character "PRED" in the first four columns of the record.

(2) The ACTIVITY IDENTIFICATION identifies the activity whose predecessor shall be specified in this record. Refer to the Activity Record for further explanation on this field.

(3) The PREDECESSOR ACTIVITY number is the number of an activity that precedes the activity noted in the ACTIVITY IDENTIFICATION field.

(4) The PREDECESSOR TYPE field indicates the type of relationship that exists between the chosen pair of activities. The PREDECESSOR TYPE field must, as a minimum, contain one of the codes listed below. Other types of activity relations may be supported from specific software vendors.

Code	Definition
SS	Start-to-Start relationship
FF	Finish-to-Finish relationship
FS	Finish-to-Start relationship

(5) The LAG DURATION field contains the number of days delay between the preceding and current activity.

g. Unit Cost Record: The Unit Cost Record shall follow all Precedence Records. If the schedule utilizes the Arrow Diagram Method, then the Unit Cost Record shall follow any Activity Records. The fields for this record shall take the following format:

Description	Column Position	Max. Len.	Reqd. Value	Type	Just.
RECORD IDENTIFIER	1- 4	4	UNIT	Fixed	
ACTIVITY IDENTIFICATION	6- 15	10		Integer	See (2)
TOTAL QTY	17- 27	11		Floating Pt.	
COST PER UNIT	29- 39	11		Floating Pt.	
QTY TO DATE	41- 51	11		Floating Pt.	

Description	Column Position	Max. Len.	Reqd. Value	Type	Just.
UNIT OF MEASURE	53- 55	3		Alpha.	

(1) The RECORD IDENTIFIER shall be identified with the four character "UNIT" placed in the first four columns of the record.

(2) The ACTIVITY IDENTIFICATION for each activity shall match the format described in the activity record.

(3) The TOTAL QTY is the total amount of this type of material to be used in this activity. This number consists of eight digits, one decimal point, and two more digits. An example of a number in this format is "11111111.11". If decimal places are not needed, this field shall still contain a ".00" in columns 25, 26, and 27.

(4) The COST PER UNIT is the cost, in dollars and cents, for each unit to be used in this activity. This number consists of eight digits, one decimal point, and two more digits. An example of a number in this format is "11111111.11". If decimal places are not needed, this field shall still contain a ".00" in columns 37, 38, and 39.

(5) The QTY TO DATE is the quantity of material installed in this activity up to the data date. This number consists of eight digits, one decimal point, and two more digits. An example of a number in this format is "11111111.11". If decimal places are not needed, this field shall still contain a ".00" in columns 49, 50, and 51.

(6) The UNIT OF MEASURE is an abbreviation that may be used to describe the units being measured for this activity.

h. Progress Record: Progress Record(s) shall follow all Unit Cost Record(s). If there are no Unit Cost Record(s), then the Progress Record(s) shall follow all Precedence Records. If the schedule utilizes the Arrow Diagram Method, then the Progress Record shall follow any Activity Records. One Record shall exist for each activity in-progress or completed. The fields for this Record shall take the following format:

Description	Column Position	Max. Len.	Reqd. Value	Type	Just.
RECORD IDENTIFIER	1- 4	4	PROG	Fixed	
ACTIVITY IDENTIFICATION	6- 15	10		Integer	See (20
ACTUAL START DATE	17- 23	7		ddmmmyy	Full
ACTUAL FINISH DATE	25- 31	7		ddmmmyy	Full
REMAINING DURATION	33- 35	3		Integer	Right
COST TO DATE	37- 45	9		Integer	Right

(1) The RECORD IDENTIFIER shall begin with the four character "PROG" in the first four columns of the record.

(2) The ACTIVITY IDENTIFICATION for each activity for which progress has been posted, shall match the format described in the Activity Record.

(3) An ACTUAL START DATE is required for all in-progress

activities. The ACTUAL START DATE shall be the same as, or later than, the PROJECT START date contained in the Project Record. The ACTUAL START DATE shall also be the same as, or prior to, the DATA DATE contained in the Project record.

(4) An ACTUAL FINISH DATE is required for all completed activities. If the REMAINING DURATION of an activity is zero, then there must be an ACTUAL FINISH DATE. The ACTUAL FINISH DATE must be the same as, or later than the PROJECT START date contained in the Project Record. The ACTUAL FINISH DATE must also be the same as, or prior to the DATA DATE contained in the Project Record.

(5) A REMAINING DURATION is required for all in-progress activities. Activities completed, based on time, shall have a zero REMAINING DURATION.

(6) Cost progress is contained in the field COST TO DATE. If there is an ACTUAL START DATE, then there must also be some value for COST TO DATE. The COST TO DATE is not tied to REMAINING DURATION. For example, if the REMAINING DURATION is "0", the COST TO DATE may only be 95% of the ACTIVITY COST. This difference may be used to reflect 5% retainage for punch list items.

i. File End Record:

(1) The File End Record shall be used to identify that the data file is completed. This record shall be the last record of the entire data file. The File End Record shall have the following format:

Description	Column Position	Max. Len.	Reqd. Value	Type	Just.
RECORD IDENTIFIER	1- 3	3	END	Fixed	

(2) The RECORD IDENTIFIER for the File End Record shall be END". No data contained in the data exchange file that occurs after this record is found shall be used.

-- End of Section --

SECTION 01440

CONTRACTOR QUALITY CONTROL

PART 1 GENERAL

1.1 SUMMARY (NOT APPLICABLE)

1.2 REFERENCES

The publications listed below form a part of this specification to the extent referenced. The publications are referred to in the text by basic designation only.

AMERICAN SOCIETY FOR TESTING AND MATERIALS (ASTM)

ASTM D 3740	(1994a) Evaluation of Agencies Engaged in the Testing and/or Inspection of Soil and Rock as Used in Engineering Design and Construction
ASTM E 329	(1993b) Use in the Evaluation of Testing and Inspection Agencies as Used in Construction

1.3 PAYMENT

Separate payment will not be made for providing and maintaining an effective Quality Control program, and all costs associated therewith shall be included in the applicable unit prices or lump-sum prices contained in the Bidding Schedule.

PART 2 - PRODUCTS (NOT APPLCABLE)

PART 3 - EXECUTION

3.1 GENERAL

The Contractor is responsible for quality control and shall establish and maintain an effective quality control system in compliance with the Contract Clause entitled "INSPECTION OF CONSTRUCTION." The quality control system shall consist of plans, procedures, and organization necessary to produce an end product which complies with the contract requirements. The system shall cover all construction operations, both on-site and off-site, and shall be keyed to the proposed construction sequence.

3.2 QUALITY CONTROL PLAN

3.2.1 General

The Contractor shall furnish for review by the Government, not later than 30 days after receipt of notice to proceed, the Contractor Quality Control (CQC) Plan proposed to implement the requirements of the Contract Clause entitled "Inspection of Construction." The plan shall identify personnel, procedures, control, instructions, test, records, and forms to be used. The Government will consider an interim plan for the first 30 days of operation. Construction will be permitted to begin only after acceptance of the CQC Plan or acceptance of an interim plan applicable to the particular feature of work to be started. Work outside of the features of work

included in an accepted interim plan will not be permitted to begin until acceptance of a CQC Plan or another interim plan containing the additional features of work to be started.

3.2.2 Content of the CQC Plan

The CQC plan shall include, as a minimum, the following to cover all construction operations, both on-site and off-site, including work by subcontractors, fabricators, suppliers and purchasing agents:

a. A description of the quality control organization, including a chart showing lines of authority and acknowledgment that the CQC staff shall implement the three phase control system for all aspects of the work specified. The staff shall include a CQC system manager who shall report to the project manager or someone higher in the Contractor's organization. Project manager in this context shall mean the individual with responsibility for the overall management of the project including quality and production.

b. The name, qualifications (in resume format), duties, responsibilities, and authorities of each person assigned a CQC function.

c. A copy of the letter to the CQC System Manager signed by an authorized official of the firm which describes the responsibilities and delegates sufficient authorities to adequately perform the functions of the CQC System Manager including authority to stop work which is not in compliance with the contract. The CQC System Manager shall issue letters of direction to all other various quality control representatives outlining duties, authorities and responsibilities. Copies of these letters will also be furnished to the Government.

d. Procedures for scheduling, reviewing, certifying, and managing submittals, including those of subcontractors, off-site fabricators, suppliers and purchasing agents. These procedures shall be in accordance with Section 01300 SUBMITTAL DESCRIPTIONS.

e. Control, verification and acceptance testing procedures for each specific test to include the test name, specification paragraph requiring test, feature of work to be tested, test frequency, and person responsible for each test. (Laboratory facilities will be approved by the Contracting Officer.)

f. Procedures for tracking preparatory, initial, and follow-up control phases and control, verification, and acceptance tests including documentation.

g. Procedures for tracking construction deficiencies from identification through acceptable corrective action. These procedures will establish verification that identified deficiencies have been corrected.

h. Reporting procedures, including proposed reporting formats.

i. A list of the definable features of work. A definable feature of work is a task which is separate and distinct from other tasks and has separate control requirements. It could be identified by different trades or disciplines, or it could be work by the same trade in a different environment. Although each section of the specifications may

generally be considered as a definable feature of work, there are frequently more than one definable feature under a particular section. This list will be agreed upon during the coordination meeting.

3.2.3 Acceptance of Plan

Acceptance of the Contractor's plan is required prior to the start of construction. Acceptance is conditional and will be predicated on satisfactory performance during the construction. The Government reserves the right to require the Contractor to make changes in his CQC plan and operations including removal of personnel, as necessary, to obtain the quality specified.

3.2.4 Notification of Changes

After acceptance of the QC plan, the Contractor shall notify the Contracting Officer in writing a minimum of seven calendar days prior to any proposed change. Proposed changes are subject to acceptance by the Contracting Officer.

3.3 COORDINATION MEETING

After the Preconstruction Conference, before start of construction, and prior to acceptance by the Government of the Quality Control Plan, the Contractor shall meet with the Contracting Officer or Authorized Representative and discuss the Contractor's quality control system. During the meeting, a mutual understanding of the system details shall be developed, including the forms for recording the CQC operations, control activities, testing, administration of the system for both on-site and off-site work, and the interrelationship of Contractor's Management and control with the Government's Quality Assurance. Minutes of the meeting shall be prepared by the Government and signed by both the Contractor and the Contracting Officer. The minutes shall become a part of the contract file. There may be occasions when subsequent conferences will be called by either party to reconfirm mutual understandings and/or address deficiencies in the CQC system or procedures which may require corrective action by the Contractor.

3.4 QUALITY CONTROL ORGANIZATION

3.4.1 CQC System Manager

The Contractor shall identify an individual within his organization at the site of the work who shall be responsible for overall management of CQC and have the authority to act in all CQC matters for the Contractor. This CQC System Manager shall be on the site at all times during construction and will be employed by the Contractor, except as noted in the following. An alternate for the CQC System Manager will be identified in the plan to serve in the event of the system manager's absence. Period of absence may not exceed two weeks at any one time, and not more than 45 workdays during a calendar year. The requirements for the alternate will be the same as for the designated CQC manager.

3.4.2 CQC Organizational Staffing

The Contractor shall provide a CQC staff which shall be at the site of work at all times during progress, with complete authority to take any action necessary to ensure compliance with the contract.

3.4.2.1 CQC Staff

Following are the minimum requirements for the CQC staff. These minimum requirements will not necessarily assure an adequate staff to meet the CQC requirements at all times during construction. The actual strength of the CQC staff may vary during any specific work period to cover the needs of the work period. When necessary for a proper CQC organization, the Contractor will add additional staff at no cost to the Government. This listing of minimum staff in no way relieves the Contractor of meeting the basic requirements of quality construction in accordance with contract requirements. All CQC staff members shall be subject to acceptance by the Contracting Officer.

3.4.2.2 CQC System Manager

The system manager shall be a graduate Engineer, having 5 years of experience on construction of a type similar to this contract, including 1 year of experience in quality control or a technician with a minimum of 8 years (documented) experience on similar type construction, including 2 years experience in quality control. The CQC system manager shall be assigned no other duties.

3.4.2.3 Supplemental Personnel

The Contractor shall provide as part of the CQC organization, as a minimum, specialized personnel in the areas of electrical, mechanical, civil, and structural. These personnel shall assist and report to the CQC system manager. Each person's sole responsibility shall be to assure that construction complies with the contract requirements for their area of specialization. These individuals shall: be employed or contracted directly with the prime contractor and not a part of the subcontractor's organization engaged in performing the construction; be physically present at the construction site a minimum of one day per week or more often as necessary to ensure contract compliance; have the necessary education or experience to ensure contract compliance. Physical presence shall begin when each discipline of work begins on site. In addition, these individuals shall be a part of the submittal review process and shall sign the applicable submittal prior to Submission to the Government.

3.4.2.4 Training

In addition to the above experience and education requirements the CQC System Manager or the principal member of the CQC staff shall attend an 8 hour training course on "Construction Quality Management." This course will be periodically offered by the Corps of Engineers and times, dates and location will be provided at the Pre-construction Conference.

3.5 CONTROL

Contractor Quality Control is the means by which the Contractor ensures that the construction, to include that of subcontractors and suppliers, complies with the requirements of the contract. The controls shall be adequate to cover all construction operations, including both on-site and off-site fabrication, and will be keyed to the proposed construction sequence. The controls shall include at least three phases of control to be conducted by the CQC system manager for all definable features of work, as follows:

3.5.1 Preparatory Phase

This phase shall be performed prior to beginning work on each definable feature of work and shall include:

a. A review of each paragraph of applicable specifications.

b. A review of the contract plans.

c. A check to assure that all materials and/or equipment have been tested, submitted, and approved.

d. A check to assure that provisions have been made to provide required control inspection and testing.

e. Examination of the work area to assure that all required preliminary work has been completed and is in compliance with the contract.

f. A physical examination of required materials, equipment, and sample work to assure that they are on hand, conform to approved shop drawing or submitted data, and are properly stored.

g. A review of the appropriate activity hazard analysis to assure safety requirements are met.

h. Discussion of procedures for constructing the work including repetitive deficiencies. Document construction tolerances and workmanship standards for that phase of work.

i. A check to ensure that the portion of the plan for the work to be performed has been accepted by the Contracting Officer.

The Government shall be notified at least 24 hours in advance of beginning any of the required action of the preparatory phase. This phase shall include a meeting conducted by the CQC system manager and attended by the superintendent, other CQC personnel (as applicable), and the foreman responsible for the definable feature. The results of the preparatory phase actions shall be documented by separate minutes prepared by the CQC system manager and attached to the daily CQC report. The Contractor shall instruct applicable workers as to the acceptable level of workmanship required in order to meet contract specifications.

3.5.2 Initial Phase

This phase shall be accomplished at the beginning of a definable feature of work. The following shall be accomplished:

a. A check of preliminary work to ensure that it is in compliance with contract requirements. Review minutes of the preparatory meeting.

b. Verification of full contract compliance. Verify required control inspection and testing.

c. Establish level of workmanship and verify that it meets minimum acceptable workmanship standards. Compare with sample panels is appropriate.

d. Resolve all differences.

e. Check safety to include compliance with and upgrading of the safety plan and activity hazard analysis. Review the activity analysis with each worker.

The Government shall be notified at least 24 hours in advance of beginning the initial phase. Separate minutes of this phase shall be prepared by the CQC system manager and attached to the daily QC report. Exact location of initial phase shall be indicated for future reference and comparison with follow-up phases. The initial phase should be repeated for each new crew to work on-site, or any time acceptable specified quality standards are not being met.

3.5.3 Follow-up Phase

Daily checks shall be performed to assure continuing compliance with contract requirements, including control testing, until completion of the particular feature of work. The checks shall be made a matter of record in the CQC documentation. Final follow-up checks shall be conducted and all deficiencies corrected prior to the start of additional features of work which may be affected by the deficient work. The Contractor shall not build upon or conceal non-conforming work.

3.5.4 Additional Preparatory and Initial Phases

Additional preparatory and initial phases may be conducted on the same definable features of work as determined by the Government if the quality of on-going work is unacceptable; or if there are changes in the applicable QC staff or in the on-site production supervision or work crew; or if work on a definable feature is resumed after a substantial period of inactivity, or if other problems develop.

3.6 TESTS

3.6.1 Testing Procedure

The Contractor shall perform tests specified or required to verify that control measures are adequate to provide a product which conforms to contract requirements. Testing includes operation and/or acceptance tests when specified. The Contractor shall procure the services of a Corps of Engineers approved testing laboratory or establish an approved testing laboratory at the project site. The Contractor shall perform the following activities and record and provide the following data:

a. Verify that testing procedures comply with contract requirements.

b. Verify that facilities and testing equipment are available and comply with testing standards.

c. Check test instrument calibration data against certified standards.

d. Verify that recording forms and test identification control number system, including all of the test documentation requirements, have been prepared.

e. Results of all tests taken, both passing and failing tests, will be recorded on the Quality Control report for the date taken. Specification paragraph reference, location where tests were taken, and the sequential control number identifying the test will be given.

Actual test reports may be submitted later, if approved by the Contracting Officer, with a reference to the test number and date taken. An information copy of tests performed by an off-site or commercial test facility will be provided directly to the Contracting Officer. Failure to submit timely test reports, as stated, may result in nonpayment for related work performed and disapproval of the test facility for this contract.

3.6.2 Testing Laboratories

3.6.2.1 Capability Check

The Government reserves the right to check laboratory equipment in the proposed laboratory for compliance with the standards set forth in the contract specifications and to check the laboratory technician's testing procedures and techniques. Laboratories utilized for testing soils, concrete, asphalt and steel shall meet criteria detailed in ASTM D 3740 and ASTM E 329.

3.6.2.2 Capability Recheck

If the selected laboratory fails the capability check, the Contractor will be assessed a charge of $500.00 to reimburse the Government for each succeeding recheck of the laboratory or the checking of a subsequently selected laboratory. Such costs will be deducted from the contract amount due the Contractor.

3.6.3 On-Site Laboratory

The Government reserves the right to utilize the Contractor's control testing laboratory and equipment to make assurance tests and to check the Contractor's testing procedures, techniques, and test results at no additional cost to the Government.

3.6.4 Furnishing or Transportation of Samples for Testing

Costs incidental to the transportation of samples or materials will be borne by the Contractor. Samples of materials for test verification and acceptance testing by the Government shall be delivered to the laboratory as directed by the Contracting Officer.

Coordination for each specific test, exact delivery location and dates will be made through the Area Office.

3.7 COMPLETION INSPECTION

At the completion of all work or any increment thereof established by a completion time stated in the Special Contract Requirements entitled "Commencement, Prosecution, and Completion of Work," or stated elsewhere in the specifications, the CQC system manager shall conduct an inspection of the work and develop a "punch list" of items which do not conform to the approved plans and specifications. Such a list of deficiencies shall be included in the CQC documentation, as required by paragraph DOCUMENTATION below, and shall include the estimated date by which the deficiencies will be corrected. The CQC system manager or staff shall make a second inspection to ascertain that all deficiencies have been corrected and so notify the Government. These inspections and any deficiency corrections required by this paragraph will be accomplished within the time stated for completion of the entire work or any particular increment thereof if the

project is divided into increments by separate completion dates.

3.8 DOCUMENTATION

The Contractor shall maintain current records of quality control operations, activities, and tests performed, including the work of subcontractors and suppliers. These records shall be on an acceptable form and shall include factual evidence that required quality control activities and/or tests have been performed, including but not limited to the following:

a. Contractor/subcontractor and their area of responsibility.

b. Operating plant/equipment with hours worked, idle, or down for repair.

c. Work performed each day, giving location, description, and by whom.

When Network Analysis (NAS) is used, identify each phase of work performed each day by NAS activity number.

d. Test and/or control activities performed with results and references to specifications/plan requirements. The control phase should be identified (Preparatory, Initial, Follow-up). List deficiencies noted along with corrective action.

e. Material received with statement as to its acceptability and storage.

f. Submittals reviewed, with contract reference, by whom, and action taken.

g. Off-site surveillance activities, including actions taken.

h. Job safety evaluations stating what was checked, results, and instructions or corrective actions.

i. Instructions given/received and conflicts in plans and/or specifications.

j. Contractor's verification statement.

k. These records shall indicate a description of trades working on the project; the number of personnel working; weather conditions encountered; and any delays encountered. These records shall cover both conforming and deficient features and shall include a statement that equipment and materials incorporated in the work and workmanship comply with the contract. The original and one copy of these records in report form shall be furnished to the Government the first workday following the report, except that reports need not be submitted for days on which no work is performed. As a minimum, one report shall be prepared and submitted for every seven days of no work and on the last day of a no work period. All calendar days shall be accounted for throughout the life of the contract. The first report following a day of no work shall be for that day only. Reports shall be signed and dated by the CQC system manager. The report from the CQC system manager shall include copies of test reports and copies of reports prepared by all subordinate quality control personnel.

3.9 SAMPLE FORMS

Sample forms are enclosed at the end of this section.

3.10 NOTIFICATION OF NONCOMPLIANCE

The Contracting Officer will notify the Contractor of any detected noncompliance with the foregoing requirements. The Contractor shall, after receipt of such notice, immediately take corrective action. Such notice, when delivered to the Contractor at the site of the work, shall be deemed sufficient for the purpose of notification. If the Contractor fails or refuses to comply promptly, the Contracting Officer may issue an order stopping all or part of the work until satisfactory corrective action has been taken. No part of the time lost due to such stop orders shall be made the subject of claim for extension of time or for excess costs or damages by the Contractor.

3.11 RESIDENT MANAGEMENT SYSTEM (RMS)

The Contractor shall implement the Resident Management system (RMS) computer program software for generating and maintaining the Contractor's Daily Quality Control Reports and other project information. The Government will provide the Contractor with the software at no charge and will assist in on-site training and program support.

The program shall be used to document and maintain the following information:

Prime Contractor staffing and subcontractor data

Insurance expiration dates

Definable features of work (items requiring a preparatory inspection) with pay activities and activity number, and the value, duration, start and finish dates , subcontractor, and bid item reference for each activity

Quality control tests

Planned training

Installed property list

Submittal information including specification section, description, time required for procurement and days of float for material need-by dates, all tied to activity number.

Progress earnings. The sum of all activity values shall equal the contract amount and bid items shall be separately identified in accordance with the Bidding Schedule and the total contract amount. All information shall be maintained current and submitted to the Government weekly.

The RMS shall document deficiency reports from the Government and shall state outstanding or future required corrections. The shall indicate the deficiency report on the Daily Quality Control Report and shall record corrections made in the RMS.

DAILY CONSTRUCTION QUALITY CONTROL REPORT

Date: Report No.
Contract No.:
Description and Location of Work:
WEATHER: (Clear) (P. Cloudy) (Cloudy); Temperature: Min; Max;
Rainfall Inches
Contractor/Subcontractors and Area of Responsibility with Labor Count for Each:
a.
b.
c.
d.
Equipment Data: (Indicate items of construction equipment, other than hand tools, at the jobsite, and whether or not used.)

1. Work Performed Today: (Indicate location and description of work performed. Refer to work performed by prime and/or subcontractors by letter in table above.)

2. Results of Surveillance: (Include satisfactory work completed, or deficiencies with action to be taken.)
a. Preparatory Inspection:

b. Initial Inspection:

c. Followup Inspections:

3. Test Required by Plans and/or Specifications Performed and Results of Tests:

4. Verbal Instructions Received: (List any instructions given by Government personnel on construction deficiencies, retesting required, etc., with action to be taken.)

5. Remarks: (Cover any conflicts in plans, specifications, or instructions or any delay to the job attributable to weather conditions.)

6. Results of Safety Inspection: (Include safety violations and corrective actions taken.)

Contractor's Inspector

CONTRACTOR'S VERIFICATION: The above report is complete and correct and all material and equipment used and work performed during this reporting period are in compliance with the contract plans and specifications except as noted above.

Contractor's Approved Authorized Representative

PREPARATORY INSPECTION CHECKLIST

Contract No.: Date:
Title: Specs Section:
MAJOR DEFINABLE SEGMENT OF WORK:
A. PERSONNEL PRESENT:

NAME	POSITION	COMPANY
1.		
2.		
3.		
4.		
5.		
6.		
7.		
8.		
9.		
10.		

(List additional personnel on reverse side.)

B. TRANSMITTALS INVOLVED:

CONTRACTOR OR NUMBER & ITEM	CODE	GOVERNMENT APPROVAL
1.		
2.		
3.		
4.		
5.		
6.		

B-I. Have all items involved been approved? Yes
No

B-II. What items have not been approved?

ITEM	STATUS
1.	
2.	
3.	
4.	
5.	

C. ARE ALL MATERIALS ON HAND? Yes No

C-I. Are all materials on hand in accordance with approvals? Yes
No

C-II. Items not on hand or not in accordance with transmittals:

1.

2.

3.

4.

D. TESTS REQUIRED IN ACCORDANCE WITH CONTRACT REQUIREMENTS:

TEST	PARAGRAPH
1.	
2.	
3.	

E. ACCIDENT PREVENTION PREPLANNING - HAZARD CONTROL MEASURES:

E-I. Applicable Outlines (Attach Completed Copies):

1.

2.

3.

4.

5.

E-II. Operational Equipment Checklists:

ATTACHED FOR:

1.

2.

3.

ON FILE FOR:

1.

2.

3.

Quality Control - Prime Contractor

Quality Control - Work Involved
INITIAL INSPECTION CHECKLIST

Contract No.:

Date:

Description and Location of Work Inspected:

Specs Section:

REFERENCE CONTRACT DRAWINGS:

A. PERSONNEL PRESENT:

NAME	POSITION	COMPANY
1.		
2.		
3.		
4.		
5.		
6.		
7.		
8.		
9.		
10.		

B. MATERIALS BEING USED ARE IN STRICT COMPLIANCE WITH THE CONTRACT PLANS AND SPECIFICATIONS. Yes No IF NOT, EXPLAIN:

C. PROCEDURES AND/OR WORK METHODS WITNESSED ARE IN STRICT COMPLIANCE WITH

THE REQUIREMENTS OF THE CONTRACT SPECIFICATIONS. Yes No IF NOT, EXPLAIN:

D. WORKMANSHIP IS ACCEPTABLE. Yes No STATE AREAS WHERE IMPROVEMENT IS NEEDED:

E. SAFETY VIOLATIONS AND CORRECTION ACTION TAKEN:

Quality Control Representative
OPERATION AND MAINTENANCE FIELD INSTRUCTIONS

CONTRACT NO.

DESCRIPTION

LOCATION

DATE

Operation and maintenance instructions were conducted for (Type of Equipment)
required by section , paragraph ,
on . (Date)

The following personnel were present: (Signatures of Attendees)

Instructions were given by (Contractor's Representative)
The personnel identified herein by their signatures certify that they have been instructed in the operation and maintenance of the above-mentioned equipment.

PIPING SYSTEM TEST REPORT

STRUCTURE OR BUILDING

CONTRACT NO.

DESCRIPTION OF SYSTEM OR PART OF SYSTEM TESTED:

DESCRIPTION OF TEST:

NAME AND TITLE OF PERSON IN CHARGE OF PERFORMING TESTS FOR CONTRACTOR:

NAME

TITLE

SIGNATURE
I HEREBY CERTIFY THAT THE ABOVE-DESCRIBED SYSTEM HAS BEEN TESTED AS INDICATED ABOVE AND FOUND TO BE ENTIRELY SATISFACTORY AS REQUIRED IN THE CONTRACT SPECIFICATIONS.

(SIGNATURE OF INSPECTOR)

(DATE)
REMARKS:

CONTRACTOR'S INSPECTOR ROOFING CHECKLIST AND TEST REPORT

DATE: WEATHER:

CONTRACT NO.:
All data required to be taken from labels on container.

1. Type of bitumen used with underlayment or insulation and area covered

2. Type of bitumen used with base sheet and area covered

3. Type of bitumen used for mopping 4 plies

4. Type of bitumen used for flood coat or surfacing gravel

5. Type and thickness of insulation or underlayment used

6. Type of base sheet used

7. Type of felt used

8. Source of surface gravel and condition, wet, dry, clean

9. Roofing sample(s), location and weight

10. Bitumen sample furnished to the Government, quantity and type

11. Bitumen temperature checks, type of asphalt, time taken, maximum temperature specified

12. Are brooms being used? Yes No.

13. Bituminous cement used, type and usage

14. Area covered

Contractor's Approved Authorized Representative

Quality Control Inspector

--End of Section-- -- End of Section --

SECTION 01500

CONSTRUCTION FACILITIES AND TEMPORARY CONTROLS

PART 1 GENERAL

1.1 AVAILABILITY AND USE OF UTILITY SERVICES (APR 1994) (FAR 52.236-14)

1.1.1 Availability

The Government will make available to the Contractor, from existing outlets and supplies, all reasonably required amounts of utilities as specified in the Contract. Unless otherwise provided in the contract, the amount of each utility service consumed shall be charged to or paid for by the Contractor at prevailing rates charged to the Government or, where the utility is produced by the Government, at reasonable rates determined by the Contracting Officer. The Contractor shall carefully conserve any utilities furnished without charge.

1.1.2 Use

The Contractor, at its expense and in a workmanlike manner satisfactory to the Contracting Officer, shall install and maintain all necessary temporary connections and distribution lines, and all meters required to measure the amount of each utility used for the purpose of determining charges. Before final acceptance by the Government, the Contractor shall remove all the temporary connections, distribution lines, meters, and associated paraphernalia.

1.2 PAYMENT FOR UTILITY SERVICES (APR 1984)

Water, gas, and electricity are available from Government-owned and -operated systems and will be charged to the Contractor at rates as provided in the paragraph "Availability and Use of Utility Services."

Utilities shall be paid for by the Contractor at the following rates:

Utility Service	Unit Quantity	Cost ($)
Electricity	KWH	0.0268
Natural Gas	1,000 CF	4.4814
Water	1,000 Gal	0.7170
Sewage Treatment	1,000 Gal	2.3991
Sanitary landfill	Ton	10.0
Rubble Pit	Ton	6.0
Asbestos Waste	Ton	36.0
Lead Waste (DRMO)	Pound	0.2500
Hazardous Waste (DRMO)	Pound	1.35
Contaminated Soil	Pound	0.1400

1.3 UTILITY SERVICES (APR 1984)

No utilities will be furnished by the Government.

1.4 IDENTIFICATION OF EMPLOYEES (APR 1985)

The Contractor shall furnish identification to each employee as directed by the Contracting Officer. Upon the release of any employee, the identification shall be delivered to the Contracting Officer for cancellation.

1.5 HAUL ROADS (CESWT-CT)

1.5.1 One-Way Roads

Whenever practical, one-way haul roads shall be used on this contract. One-way haul roads for off-the-road equipment (e.g., belly dumps, scrapers, and off-the-road trucks) shall have a minimum usable width of 25 feet . One-way haul roads for over-the-road haulage equipment only (e.g., dump trucks, etc.) may be reduced to a usable width of 15 feet . When the Contracting Officer determines that it is impractical to obtain the required width for one-way haul roads (e.g., a road on top of a levee), a usable width of not less than 10 feet may be approved by the Contracting Officer, provided a positive means of traffic control is implemented. Such positive means shall be signs, signals, and/or signalman and an effective means of speed control.

1.5.2 Two-Way Roads

Two-way haul roads for off-the-road haulage equipment shall have a usable width of 60 feet . Two-way haul roads for over-the-road haulage equipment only may be reduced to a usable width of 30 feet .

1.5.3 Maintenance

Haul roads shall be graded and otherwise maintained to keep the surface free from potholes, ruts, and similar conditions that could result in unsafe operation.

1.5.4 Design

Grades and curves shall allow a minimum sight distance of 200 feet for one-way roads and 300 feet for two-way roads. Sight distance is defined as the centerline distance an equipment operator (4.5 feet above the road surface) can see an object 4.5 feet above the road surface. When conditions make it impractical to obtain the required sight distance (e.g., ramps over levees), a positive means of traffic control shall be implemented.

1.5.5 Dust Control

Dust abatement shall permit observation of objects on the roadway at a minimum distance of 300 feet.

1.5.6 Markings

Haul roads shall have the edges of the usable portion marked with posts at intervals of 50 feet on curves and 200 feet maximum elsewhere. Such markers shall extend 6 feet above the road surface and, for nighttime haulage, be provided with reflectors in both directions.

1.6 MOWING

Grass and weedy vegetation within the areas utilized by the Contractor, including work areas, administrative areas, and storage areas, shall be kept mowed to control vegetative growth. Vegetation shall be mowed to a height of 3 inches when it reaches a height of 6 inches. Mowing shall be done with a rotary mower. Mowing shall be done during periods and in such a manner that the soil and grass will not be damaged. Areas adjacent to trees, shrubs, fences, buildings, etc. shall be hand trimmed. The Government may, after notice to the Contractor and at the discretion of the Contracting Officer, mow the Contractor's areas at any time the vegetation height exceeds 6 inches and all costs incurred by the Government for performing such work will be deducted from the contract.

1.7 STAGING AREA PREPARATION (REQUEST BY DE, JUL 91)

The Contractor's staging area or areas shall be located within the boundaries of the project as directed by the Contracting Officer. The staging area(s) shall be prepared by the Contractor to the limits as required for the Contractor's temporary field office facilities, material storage, parking and other necessary staging activities. The Contractor shall prepare the staging area and the driveway access by grading and constructing in accordance with the plans and specifications. The parking area and drives may be constructed to pavement completion or to partial completion as desired but shall be not less than the construction of base course. The Contractor shall be responsible for the maintenance of all completed or partially completed construction and shall repair any damage prior to acceptance of the project.

PART 2 PRODUCTS (NOT APPLICABLE)

PART 3 EXECUTION (NOT APPLICABLE)

--End of Section--

-- End of Section --

SECTION 01561

ENVIRONMENTAL PROTECTION

PART 1 GENERAL

1.1 REFERENCES

The publications listed below form a part of this specification to the extent referenced. The publications are referred to in the text by basic designation only.

CODE OF FEDERAL REGULATIONS (CFR)

40 CFR 262	Subpart D, Recordkeeping and Reporting

ENVIRONMENTAL PROTECTION AGENCY (EPA)

EPAPUB	(1992) NPDES (National Pollution Discharge Elimination System) General Permits for Storm Water Discharges from Construction Sites

1.2 DEFINITIONS

For the purpose of this specification, environmental pollution and damage is defined as the presence of chemical, physical, or biological elements or agents which adversely affect human health or welfare; unfavorably alter ecological balances of importance to human life; affect other species of importance to man; or degrade the utility of the environment for aesthetic, cultural and/or historical purposes. The control of environmental pollution and damage requires consideration of air, water, and land, and includes management of visual aesthetics, noise, solid waste, radiant energy and radioactive materials, as well as other pollutants.

1.3 SUBMITTALS

Government approval is required for submittals with a "GA" designation; submittals having a "FIO" designation are for information only. The following shall be submitted in accordance with Section 01300 SUBMITTAL DESCRIPTIONS:

SD-01 Data

Environmental Protection Plan

The environmental protection plan shall address all items in the paragraph ENVIRONMENTAL PROTECTION REQUIREMENTS.

Pollution Prevention Plan; GA.

The pollution prevention plan (PPP) shall address all items in the paragraph STORM WATER POLLUTION PREVENTION PLANS. The plan shall be submitted and approved prior to the beginning of construction.

Waste Management Plan; GA.

The waste management plan shall address the waste stream, estimated quantities of waste, describe and tentatively classify the broad waste types anticipated such as; hazardous waste (with an EPA waste code); solid waste; medical waste; radioactive waste; mixed hazardous/radioactive waste; and other special waste. The rationale for assignment of waste to these broad waste categories shall be provided.

1.4 ENVIRONMENTAL PROTECTION REQUIREMENTS

Provide and maintain, during the life of the contract, environmental protection. Plan for and provide environmental protective measures to control pollution that develops during normal construction practice. Plan for and provide environmental protective measures required to correct conditions that develop during the construction of permanent or temporary environmental features associated with the project. Comply with Federal, State, and local regulations pertaining to the environment, including but not limited to water, air, and noise pollution.

1.4.1 Environmental Protection Plan

Within 15 days after receipt of Notice of Award of the contract and at least 7 days prior to the Preconstruction Conference, the Contractor shall submit in writing, with drawings, an Environmental Protection Plan and meet with representatives of the Contracting Officer to develop mutual understanding relative to compliance with this provision and administration of the environmental protection program. Approval of the Contractor's plan will not relieve the Contractor of his responsibility for adequate and continuing control of pollutants and other environmental protection measures. The Government reserves the right to make changes in his environmental protection plan and operations as necessary to maintain satisfactory environmental protection performance. The environmental protection plan shall include but not be limited to the following:

1.4.1.1 Laws, Regulations, and Permits

Except for a Notice of Intent (NOI) required for obtaining a permit for storm water discharge which will be obtained by the Corps of Engineers, the Contractor shall prepare a list of Federal, State and local laws, regulations, and permits concerning environmental protection, pollution control and abatement that are applicable to the Contractor's proposed operations and the requirements imposed by those laws, regulations and permits.

1.4.1.2 Protection of Features

The Contractor shall determine methods for the protection of features to be preserved within authorized work areas. The Contractor shall prepare a listing of methods to protect resources needing protection, i.e., trees, shrubs, vines, grasses and ground cover, landscape features, air and water quality, fish and wildlife, soil, historical, archaeological and cultural resources.

1.4.1.3 Procedures

The Contractor shall implement procedures to provide the required environmental protection and to comply with the applicable laws and regulations. The Contractor shall set out the procedures to be followed to correct pollution of the environment due to accident, natural causes or

failure to follow the procedures set out in accordance with the environmental protection plan.

1.4.1.4 Permit or License

The Contractor shall obtain all needed permits or licenses for disposal of solid, liquid, chemical, and other waste generated as a result or this contract.

1.4.1.5 Drawings

The Contractor shall include drawings showing locations of any proposed temporary excavations or embankments for haul roads, stream crossings, material storage areas, structures, sanitary facilities, stockpiles of earth materials, and disposal areas for excess earth material and unsatisfactory earth materials.

1.4.1.6 Environmental Monitoring Plans

The Contractor shall include environmental monitoring plans for the job site which incorporate land, water, air and noise monitoring.

1.4.1.7 Traffic Control Plan

The Contractor shall include a traffic control plan for the job site.

1.4.1.8 Surface and Ground Water

The Contractor shall establish methods of protecting surface and ground water during construction activities.

1.4.1.9 Work Area Plan

The Contractor shall include a work area plan showing the proposed activity in each portion of the area and identifying the areas of limited use or nonuse. The plan shall include measures for marking the limits of use areas.

1.4.1.10 Plan of Borrow Area(s)

The Contractor shall include a plan of borrow area(s) for the job site.

1.4.1.11 Method of Marking Clearing Limits

The Contractor shall include the method of marking and maintaining markings for limits of clearing.

1.4.1.12 Method of Controlling Equipment

The Contractor shall include a plan of the method for controlling equipment maneuvering to avoid environmental damage.

1.4.1.13 Training of Contractor's Personnel

The Contractor shall include a plan for training and control of his personnel for environmental damage.

1.4.1.14 Prevention and Control of Spillage

The Contractor shall include a plan for prevention and control of damaging spillages.

1.4.1.15 Layout of Work Areas and Other Areas

The Contractor shall include a plan of his method for layout of work areas, plant sites, haul roads, and borrow and waste areas.

1.4.1.16 Method and Location of Waste and Debris Disposal

The Contractor shall include the location for disposal of waste and debris.

1.4.1.17 Preplanning

Meetings of the Contractor with Contracting Officer or his authorized representative as specified in the paragraph MEETINGS, for the purpose of preplanning prevention of environmental damage.

1.4.1.18 Proposed Schedule for Training of Contractor Personnel

The Contractor shall include a schedule of proposed meetings to be attended by all Contractor personnel for the purpose of training for environmental protection with a Contracting Officer's representative present at appropriate intervals. Sufficient length of time to accomplish the purpose shall be included.

1.4.1.19 Method of Training

The Contractor shall include a proposed method of training all new employees in environmental protection before they commence working project.

1.5 STORM WATER POLLUTION PREVENTION PLANS

The Contractor shall prepare a storm water pollution prevention plan (PPP) for the construction activity. This plan shall be in accordance with EPAPUB NPDES General Permits for Storm Water Discharges from Construction Sites. The plan shall identify potential sources of pollution resulting from storm water discharge from the project site(s) and present methods for reducing or eliminating such discharge.

The Contracting Officer and the Contractor shall review the PPP to determine the accuracy of the plan. The PPP may be modified to insure that all current measures to prevent offsite migration of pollutants, including soils, are included in the plan.

1.5.1 Contents of the Pollution Prevention Plan

The pollution prevention plan shall include as a minimum:

(a) a narrative description of potential pollution sources for each construction site through a description of the nature of the construction activity;

(b) the intended phasing of construction activities related to soil disturbance and the storm water control measure proposed for that activity. For each storm water control measure proposed, the PPP shall indicate when the measure will be implemented. Perimeter controls shall be actively maintained until final stabilization of that portion

of the site upward of the perimeter control is established;

(c) estimates of total acerage to be disturbed, estimates of the runoff coefficient of the site once construction is completed, and any existing soils data or discharge quality data;

(d) site mapping detailing drainage patterns, slopes, major activities, location of structural controls such as hay bale barriers and the location of point sources;

(e) storm water management controls appropriate for the project, including perimeter controls, and stabilization practices to be employed such as temporary grading to control runoff velocities, temporary seeding and mulching and permanent seeding and planting. For a common drainage location that serves an area of 5 or more disturbed acres at one time, a sediment basin providing 3,600 cubic feet of storage per acre drained shall be provided. Equivalent control measures may be taken where attainable and after approval by the Contracting Officer;

(f) a description of maintenance procedures to be employed to minimize the offsite discharge of pollutants, and an inspection program to insure that the PPP is effective, or if not, to insure that necessary changes to the plan are made and implemented in a timely manner;

(g) identification for each storm water management measure set forth in the plan, the Contractor and/or subcontractor(s) that will implement such measure. Contractor and subcontractors identified in the PPP shall sign a certification that they have reviewed the general permit as listed in the paragraph STORM WATER POLLUTION PREVENTION PLANS and understand the terms and conditions therein. All such certifications shall be included in the PPP, which is to be kept on the job side for inspection by EPA or state or local regulatory agencies;

(h) plan for control of offsite vehicle tracking of soils. Contractor shall make every effort to keep soils onsite. This may be accomplished by including paved or graveled entrances, graveled and dedicated roadways, or vehicle wash stations.

1.6 MEETINGS

The Contractor shall meet with representatives of the Contracting Officer to develop mutual understanding relative to compliance with this section of the specifications and administration of the environment protection program. The Contractor shall be prepared to discuss the program in conferences convened by the Contracting Officer before starting work on each major phase of operation. Approval of the Contractor's plan for environmental protection will not relieve the Contractor of his responsibility for adequate and continuing control of pollutants and protection of environmental features. All Contractor personnel shall be required to attend.

1.7 SUBCONTRACTORS

Assurance of compliance with this section by subcontractors will be the responsibility of the Contractor.

1.8 PERMITS OBTAINED BY CORPS OF ENGINEERS

The Contractor shall comply with all requirements under the terms and conditions set out in the following permit(s) which will be obtained by the Corps of Engineers.

1.9 REGULATORY REQUIREMENTS

The Contractor shall comply with all federal, state, and local regulatory and statutory requirements.

PART 2 PRODUCTS (NOT APPLICABLE)

PART 3 EXECUTION

3.1 PROTECTION OF ENVIRONMENTAL RESOURCES

The environmental resources within the project boundaries and those affected outside the limits of permanent work under this contract shall be protected during the entire period of this contract. The Contractor shall confine his activities to areas defined by the contract drawings or specifications. Environmental protection shall be as stated in the following subparagraphs.

3.1.1 Protection of Land Resources

Prior to the beginning of any construction, the Contracting Officer will identify all land resources to be preserved within the Contractor's work area. The Contractor shall not remove, cut, deface, injure, or destroy land resources including trees, shrubs, vines, grasses, topsoil, and land forms without special permission from the Contracting Officer. No ropes, cables, or guys shall be fastened to or attached to any trees for anchorage unless specifically authorized. Where such special emergency use is permitted, the Contractor shall provide effective protection for land and vegetation resources at all times as defined in the following subparagraphs.

3.1.1.1 Work Area Limits

Prior to any construction, the Contractor shall mark the areas where no work is to be performed under this contract. Isolated areas within the general work area which are to be saved and protected shall also be marked or fenced. Monuments and markers shall be protected before construction operations commence and during all construction operations. Where construction operations are to be conducted during darkness, the markers shall be visible during darkness. The Contractor shall convey to his personnel the purpose of marking and/or protection of all necessary objects.

3.1.1.2 Protection of Landscape

Trees, shrubs, vines, grasses, land forms and other landscape features to be preserved, indicated and defined on the drawings submitted by the Contractor as a part of the Environmental Protection Plan, shall be clearly identified by marking, fencing, or wrapping with boards, or any other approved techniques.

3.1.1.3 Reduction of Exposure of Unprotected Erodible Soils

Earthwork brought to final grade shall be finished as indicated and specified. Side slopes and back slopes shall be protected as soon as practicable upon completion of rough grading. All earthwork shall be planned and conducted to minimize the duration of exposure of unprotected

soils. Except in instances where the constructed feature obscures borrow areas, quarries and waste material areas, these areas shall not initially be cleared in total. Clearing of such areas shall progress in reasonably sized increments as needed to use the areas developed as approved by the Contracting Officer.

3.1.1.4 Temporary Protection of Disturbed Areas

Such methods as necessary shall be utilized to effectively prevent erosion and control sedimentation, including but not limited to the following:

a. Retardation and Control of Runoff

Runoff from the construction site shall be controlled by construction of diversion ditches, benches, and berms to retard and divert runoff to protected drainage courses, and the Contractor shall also utilize any measures required by area-wide plans approved under Paragraph 208 of the Clean Water Act.

b. Sediment Basins

Sediment from construction areas shall be trapped in temporary or permanent sediment basins in accordance with basin plans shown on the contract drawings and in accordance with the paragraph: STORM WATER POLLUTION PREVENTION PLANS. The Contractor shall institute effluent quality monitoring programs as required by state and local environmental agencies.

3.1.1.5 Erosion and Sedimentation Control Devices.

The Contractor shall construct or install all temporary and permanent erosion sedimentation control features as indicated on the contract drawings. Temporary erosion and sediment control measures such as berms, dikes, drains, sedimentation basins, grassing and mulching shall be maintained until permanent drainage and erosion control facilities are completed and operative.

3.1.1.6 Stabilization of Disturbed Soils

Stabilization measures of areas involved in the Pollution Prevention Plans shall be initiated on disturbed areas as soon as practicable, but no more than 14 days after the construction activity on a particular portion of the site has temporarily or permanently ceased except as follows:

(a) where construction activities will resume on a portion of the site within 21 days from the time when construction activities temporarily ceased;

(b) where the initiation of the stabilization measure is precluded by snow cover in which case stabilization measures shall be initiated as soon thereafter as practicable.

3.1.1.7 Inspections

Weekly inspections of construction sites shall be conducted by the Contractor to insure that the various controls and components of the various plans required by this section are in place. In addition, the

Contractor shall make an inspection within 24 hours following a 1/2 inch or greater rainfall event to insure that the controls are working adequately and have not been impacted by the rainfall event.

3.1.1.8 Location of Contractor Facilities

The Contractor's field offices, staging areas, stockpiles, storage, and temporary buildings shall be placed in areas designated by the Contracting Officer. Temporary movement or relocation of Contractor facilities shall be made only on approval by the Contracting Officer.

3.1.1.9 Borrow Areas on Government Property

Borrow areas on government property shall be managed to minimize erosion and to prevent sediment from entering nearby water courses or lakes.

3.1.1.10 Disposal Areas on Government Property

Disposal areas on Government property shall be managed and controlled to limit material to areas designated on the contract drawings and prevent erosion of soil or sediment from entering nearby water courses or lakes. Disposal areas shall be developed in accordance with the grading plan indicated on the contract drawings.

3.1.1.11 Temporary Excavation and Embankments

Temporary excavation and embankments shall be controlled to protect adjacent areas from contamination.

3.1.1.12 Disposal of Solid Wastes

Solid wastes (excluding clearing debris) shall be placed in containers which are emptied on a regular schedule. All handling and disposal shall be conducted to prevent contamination. The Contractor shall transport all solid waste off Government property and dispose of it in compliance with Federal, State, and local requirements for solid waste disposal.

3.1.1.13 Disposal of Chemical Wastes

Chemical wastes shall be stored in corrosion resistant containers, removed from the work area and disposed of in accordance with Federal, State, and local regulations.

3.1.1.14 Disposal of Discarded Materials

Discarded materials other than those which can be included in the solid waste category shall be handled as directed by the Contracting Officer.

3.1.1.15 Disposal of Materials at Ft. Sill

Disposal of trash, garbage, or domestic waste shall be in the Ft. Sill Base Sanitary Landfill. Demolition rubble shall be disposed of in the Ft. Sill rubble pit. Disposal of metals shall be the responsibility of the Contractor off Government Property. Disposal of Contractor produced POL products, chemicals, or other hazardous or toxic compounds shall be in accordance with Ft. Sill Regulation USAFACFS Regulation 200-2. The Contracting Officer shall be advised of the type of Contractor produced POL products, chemicals, or other hazardous or toxic compounds and the amount

of these products. The Contracting Officer will determine the methods of disposal of these products and such actions may require EPA or State permits.

3.2 HISTORICAL, ARCHAEOLOGICAL AND CULTURAL RESOURCES

Existing historical, archaeological and cultural resources within the Contractor's work area will be so designated by the Contracting Officer and precautions shall be taken by the Contractor to preserve all such resources as they existed at the time they were pointed out to the Contractor. The Contractor shall install all protective devices such as off-limit markings, fencing, barricades, or other devices deemed necessary by the Contracting Officer for these resources so designated on the contract drawings and shall be responsible for their preservation during this contract. If during construction items of apparent archaeological or historical interest are discovered, they shall be left undisturbed and the Contractor shall report the find immediately to the Contracting Officer.

3.3 PROTECTION OF WATER RESOURCES

The Contractor shall keep construction activities under surveillance, management and control to avoid pollution of surface and ground waters. Special management techniques as set out below shall be implemented to control water pollution by the listed construction activities which are included in this contract.

3.3.1 Washing and Curing Water

Waste waters directly derived from construction activities shall not be allowed to enter water areas. These waste waters shall be collected and placed in retention ponds where the suspended materials can be settled out or the water evaporated in order to separate the pollutants from the water.

3.3.2 Monitoring of Water Areas Affected by Construction Activities

Monitoring of water areas affected by construction activities shall be the responsibility of the Contractor. All water areas affected by construction activities shall be monitored by the Contractor.

3.4 PROTECTION OF FISH AND WILDLIFE RESOURCES

The Contractor shall keep construction activities under surveillance, management and control to minimize interference with, disturbance to and damage of fish and wildlife. Species that require specific attention along with measures for their protection shall be listed by the Contractor prior to beginning of construction operations.

3.5 PROTECTION OF AIR RESOURCES

The Contractor shall keep construction activities under surveillance, management and control to minimize pollution of air resources. All activities, equipment, processes, and work operated or performed by the Contractor in accomplishing the specified construction shall be in strict accordance with all Federal and State of Oklahoma emission and performance laws and standards. Special management techniques as set out below shall be implemented to control air pollution by the construction activities which are included in the contract.

3.5.1 Particulates

Dust particles, aerosols, and gaseous by-products from all construction activities, processing and preparation of materials, such as from asphaltic batch plants, shall be controlled at all times, including weekends, holidays and hours when work is not in progress. The Contractor shall maintain all excavations, stockpiles, haul roads, permanent and temporary access roads, plant sites, spoil areas, borrow areas, and all other work areas within or outside the project boundaries free from particulates which would cause the air pollution standards mentioned in the paragraph "PROTECTION OF AIR RESOURCES" to be exceeded or which would cause a hazard or a nuisance. Sprinkling, chemical treatment of an approved type, light bituminous treatment, baghouse, scrubbers, electrostatic precipitators or other methods will be permitted to control particulates in the work area. Sprinkling, to be efficient, must be repeated at such intervals as to keep the disturbed area damp at all times. The Contractor must have sufficient competent equipment available to accomplish this task. Particulate control shall be performed as the work proceeds and whenever a particulate nuisance or hazard occurs.

3.5.2 Hydrocarbons and Carbon Monoxide

Hydrocarbons and carbon monoxide emissions from equipment shall be controlled to Federal and State allowable limits at all times.

3.5.3 Odors

Odors shall be controlled at all times for all construction activities, processing and preparation of materials.

3.5.4 Monitoring Air Quality

Monitoring of air quality shall be the responsibility of the Contractor. All air areas affected by the construction activities shall be monitored by the Contractor.

3.6 TESTS

The Contractor shall establish and maintain quality control for environmental protection operations to assure compliance with contract requirements and maintain records of his quality control for all construction operations, including, but not limited to the following items. The Contractor shall record on daily reports any problems in complying with laws, regulations and ordinances and corrective action taken. Three copies of these records and tests, as well as the records of corrective action taken, shall be furnished the Government as directed by the Contracting Officer.

3.6.1 Laws, Regulations and Ordinances

The Contractor must comply with all Federal, State, and local laws, regulations and ordinances concerning pollution control.

3.6.2 Protection of Land Resources

The Contractor shall prevent landscape defacement and provide post-construction clean-up.

3.6.3 Protection of Water Resources

The Contractor shall prevent the contamination of lakes, ditches, or other bodies of water with harmful chemicals; the Contractor shall dispose of waste materials; and the Contractor shall provide erosion control.

3.6.4 Pollution Control Facilities

The Contractor shall provide for the maintenance of pollution control facilities. The Contractor shall conduct a training course on the maintenance of pollution control facilities.

3.7 INSPECTION

The Contracting Officer will notify the Contractor in writing of any observed noncompliance with any of the Contractor's required plans. The Contractor shall, after receipt of such notice, inform the Contracting Officer of proposed corrective action and take such action as may be approved. If the Contractor fails to comply promptly, the Contracting Officer may issue an order stopping all or part of the work until satisfactory corrective action has been taken. No time extensions will be granted or costs or damages allowed to the Contractor for any such suspension.

3.8 POST CONSTRUCTION CLEANUP

The Contractor shall clean up all area(s) used for construction.

3.9 RESTORATION OF LANDSCAPE DAMAGE

The Contractor shall restore all landscape features damaged or destroyed during construction operations outside the limits of the approved work areas. Such restoration shall be in accordance with the plans submitted for approval by the Contracting Officer.

3.10 MAINTENANCE OF POLLUTION FACILITIES

The Contractor shall maintain all constructed facilities and temporary pollution control devices for the duration of the contract or for that length of time construction activities create the particular pollutant.

3.11 TRAINING OF CONTRACTOR PERSONNEL IN POLLUTION CONTROL

The Contractor shall train his personnel in all phases of environmental protection. The training shall include methods of detecting and avoiding pollution, familiarization with pollution standards, both statutory and contractual, and installation and care of facilities (vegetative covers and instruments required for monitoring purposes) to insure adequate and continuous environmental pollution control.

3.12 RECORD KEEPING

During construction, all records shall be retained onsite. Inspection reports, and modifications of the plans required shall be retained for 3 years following construction.

--End of Section--

-- End of Section --

SECTION 01580

BULLETIN BOARD, PROJECT SIGN, AND SAFETY SIGN

PART 1 GENERAL

1.1 GENERAL

Immediately upon beginning of work under this contract, the Contractor shall accomplish the work covered in this section. Locations of the bulletin board, project sign, and safety sign shall be as determined by the Contracting Officer. Upon completion of work under this contract, the signs shall be removed from the jobsite and shall remain the property of the Contractor.

PART 2 PRODUCTS

2.1 BULLETIN BOARD

Bulletin board shall be a weatherproof, glass-covered board not less than 36 by 48 inches in size, for displaying the Equal Employment Opportunity Poster, a copy of the wage decision contained in the contract, Wage Rate Information Poster, and other information approved by the Contracting Officer. The bulletin board shall be located at the site of work in a conspicuous place easily accessible to all employees. Legible copies of the above items shall be displayed until work under the contract is complete.

2.2 PROJECT SIGN

The project sign shall be constructed as shown on the drawings at the end of this section. The sign shall receive one coat of primer paint followed by two coats of finish gloss exterior enamel paint, color as directed by the Contracting Officer. Lettering shall be as shown on the drawing and shall be white gloss exterior type enamel.

2.3 SAFETY SIGN

The safety sign shall be located in a conspicuous place within view of all employees and visitors. Details of construction shall be as shown on the drawing attached at the end of this section. Paint shall be gloss exterior enamel. Lettering shall be as shown on the drawing. The Contractor shall keep the safety sign current by posting the numbers daily.

PART 3 EXECUTION (NOT APPLICABLE)

--End of Section--

Below are two samples of the construction project identification sign showing how this panel is adaptable for use to identify either military (top), or civil works projects (bottom). The graphic format for this 4' x 6' sign panel follows the legend guidelines and layout as specified below. The large 4' x 4' section of the panel on the right is to be white with black legend. The 2' by 4' section of the sign on the left with the full Corps Signature (reverse version) is to be screen printed Communications Red on the white background.

This sign is to be placed with the Safety Performance Sign shown on the following page. Mounting and fabrication details are provided on page 16.4.

Special applications or situations not covered in these guidelines should be referred to the District/Division sign coordinator.

Legend Group 1: One- to two-line description of Corps relationship to project.
Color: White
Typeface: 1.25" Helvetica Regular
Maximum line length: 19"

Legend Group 2: Division or District Name (optional). Placed below 10.5" Reverse Signature (6" Castle).
Color: White
Typeface: 1.25" Helvetica Regular

Legend Group 3: One- to three-line project title legend describes the work being done under this contract.
Color: Black
Typeface: 3" Helvetica Bold
Maximum line length: 42"

Legend Group 4: One- to two-line identification of project or facility (civil works) or name of sponsoring department (military).
Color Black
Typeface: 1.5" Helvetica Regular
Maximum line length: 42"

Cross-align the first line of Legend Group 4 with the first line of the Corps Signature (US Army Corps) as shown

Legend Groups 5a-b: One- to five-line identification of prime contractors including: type (architect, general contractor, etc), corporate or firm name, city, state. Use of Legend Group 5 is optional.
Color: Black
Typeface: 1.25" Helvetica Regular
Maximum line length: 21"

All typography is flush left and rag right, upper and lower case with initial capitals only as shown. Letter- and word-spacing to follow Corps standards as specified in Appendix D.

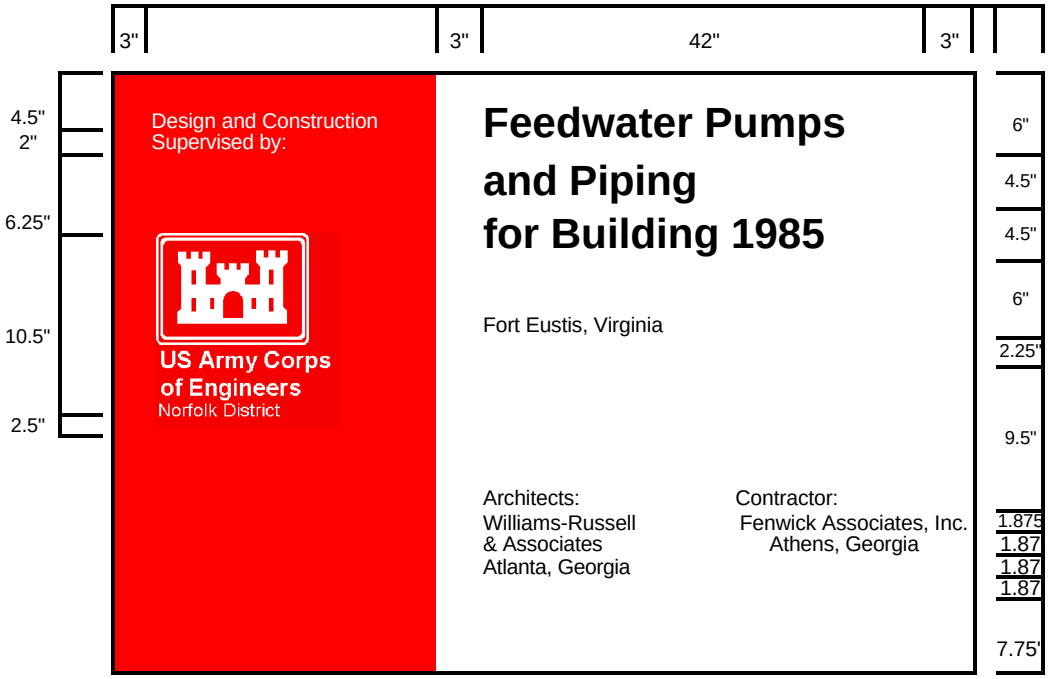

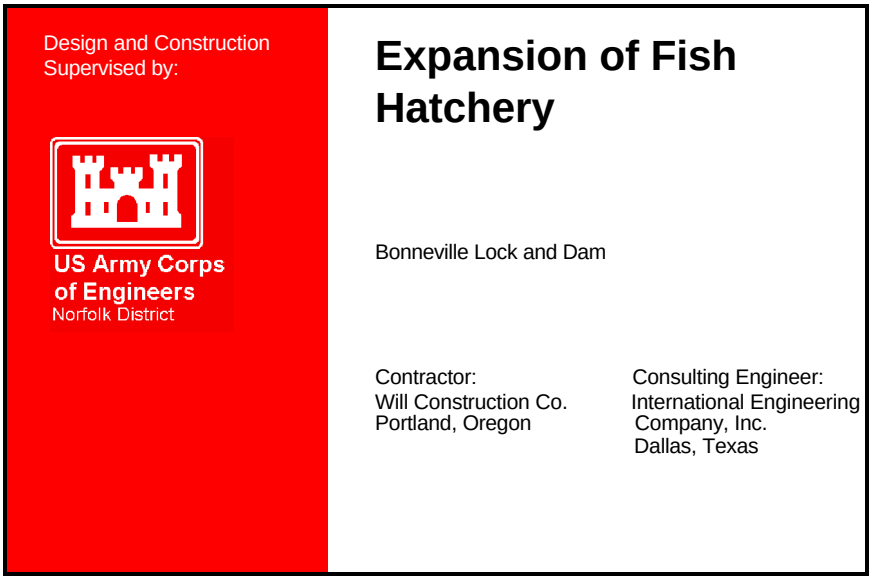

Each contrrator's safety record is to be posted on Corps managed or supervised construction projects and mounted with the construction project identification sign.

The graphic format, color, size and type-faces used on the sign are to be reproduced exactly as specified below. The title with First Aid logo in the top section of the sign and the performance record captions are standard for all signs of the type. Legend Groups 2 and 3 below identify the project and the contractor and are to be placed on the sign as shown.

Safety record numbers are mounted on individual metal plates and are screwmounted to the background to allow for daily revisions to posted safety performance record.

Legend Group 1: Standard two-line title "Safety is a Job requirement" with (8 od.) Safety Green First Aid logo.
Color: to match PMS 347
Typeface: 3" Helvetica Bold
Color: Black

Legend Group 2: One to two-line project title legend describes the work being done under this contract and name of host project.
Color: Black
Typeface: 1.5" Helvetica Regular
Maximum line length: 42"

Legend Group 3: One to two-line identifation: name of prime contractor and city, state address.
Color: Black
Typeface: 1.5" Helvetica Regular
Maximum line length: 42"

Legend Group 4: Standard safety record capitons as shown.
Color: Black
Typeface: 12.5" Helvetica Regular

Replaceable numbers are to be mounted on white .060 aluminum plates and screw-mounted to background.
Color: Black
Typeface: 3" Helvetica Regular
Plate size: 2.5" x .5"

All typography is flush left and rag right. Upper and lower case with initial capitals only as shown. Letter- and word-spacing to follow Corps standards.

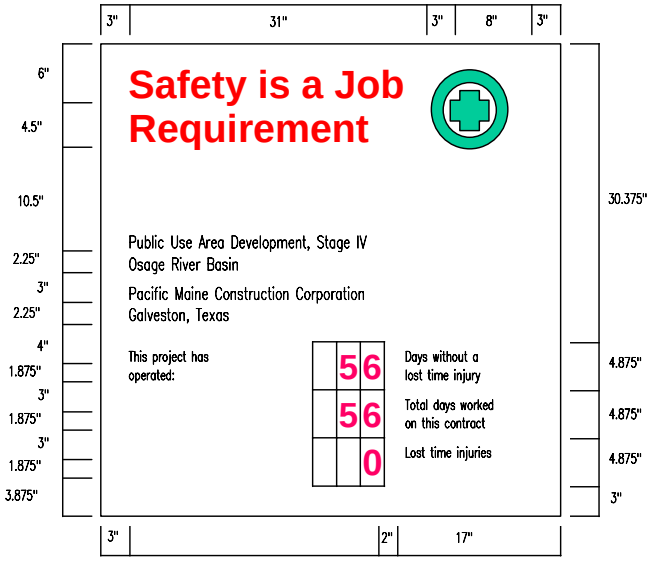

Sign Type	Legend Size	Panel Size	Post Size	Specification Code	Mounting Height	Color Bkg/Lgd
CID-02	various	4"x4"	4"x4"	HDO-3	48"	WH/BK-GR

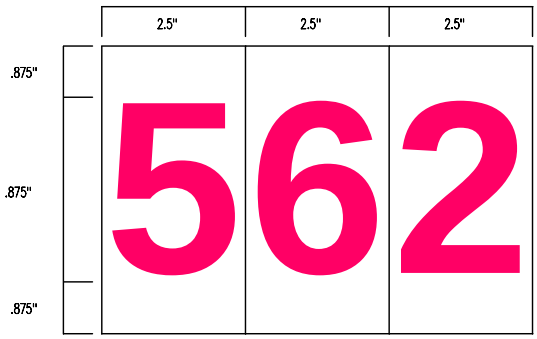

SAFETY PERFORMANCE SIGN

Fig. 5d

All Construction Project Identication signs and Safety Performance signs are to be fabricated and installed as described below. The signs are to be erected at a location designated by the contracting officer and shall conform to size, format. and typographic standards.

The sign panels are to be fabricated from .75” High Density Overlay Plywood.

Sign graphics to be prepared on a white non-reflective vinyl film with positionable adhesive backing.

All graphics except for the Communications Red background with Corps signature on the project sign are to die-cut or computer cut nonreflective vinyl, pre-spaced legends prepared in the sizes and typefaces specified and applied to the background panel following the graphic formats shown.

The 2’ x 4’ Communications Red panel (to match PMS-032) with full Corps signature (reverse version) is to be screen printed on the white background identification of the District / Division may be applied under the signature with white cut vinyl letters prepared to Corps standards

Drill and insert six (6) .375 T-nuts from the front face of the HDO sign panel. Position holes as shown. Flange of T-nut to be flush with sign face

Apply Graphic panel to prepared HDO plywood panel following manufactures instructions

Sign uprights to be structural grade 4” x 4” treated Douglas Fur or Southern Yellow Pine. No 1 or better. Post to be 12’ long Drill six (6) .375” mounting holes in uprights to align with T-nuts in sign panel. Countersink (5”) back of hole to accept socket head cap screw (4” x .375”).

Assemble sign panel and uprights. Imbed assembled sign panel and uprights in 4’ hole. Local soil conditions and/or wind loading may require bolting additional 2” x 4” structs on inside face of uprights to reinforce installation shown.

Shown below the mounting diagram is a panel layout grid with spaces provided for project information. Photocopy this page and use as a worksheet when preparing sign Legend orders.

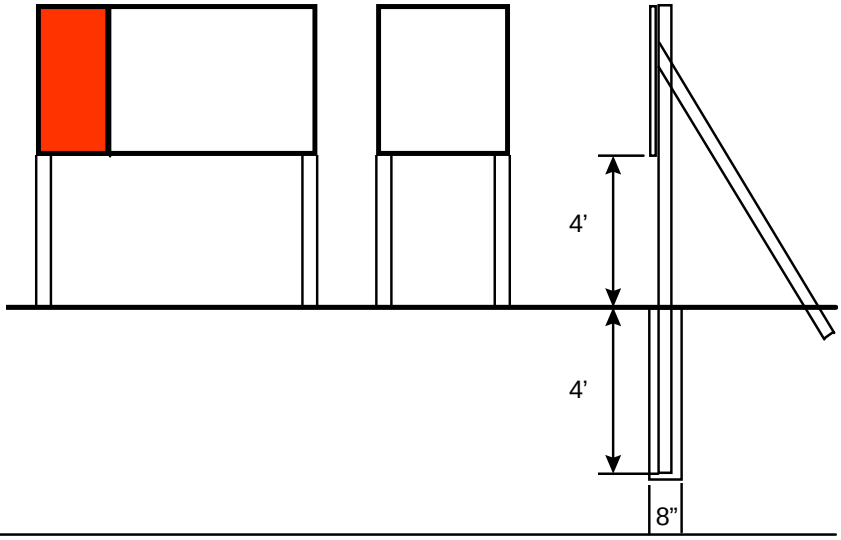

Construction Project Sign
Legend Group 1

1 _____
2 _____

Legend Group 2 Division/District Names

1 _____
2 _____

Legend Group 3 Project Title

1 _____
2 _____
3 _____

Legend Group 4 Facility Name

1 _____
2 _____

Legend Group 5a: Contractor/A&E	Legend Group 5b: Contractor/A&E
1 _____	1 _____
2 _____	2 _____
3 _____	3 _____
4 _____	4 _____
5 _____	5 _____

Safety Performance Sign
Legend Group 1: Project Title

1 _____
2 _____

Legend Group 2: Contractor/A&E

1 _____
2 _____

FABRICATION AND MOUNTING GUIDELINES

fig5c

SECTION 01600

MATERIAL AND EQUIPMENT

PART 1 GENERAL

1.1 INVENTORY OF INSTALLED PROPERTY

A list shall be made of equipment or units of equipment that require electrical power, water, or fuel, or that may require periodic or eventual removal or replacement. Such items shall include, but not limited to, air handling units; fans; air conditioners; compressors; condensers; boilers; thermal exchangers; pumps; cooling towers; tanks; fire hydrants; large plumbing fixtures such as sinks water closets, lavatories, urinals, and showers; fire suppression systems (sprinkler heads by type, etc.); and light fixtures. The list shall be be kept up to date as items are installed or claimed for payment as material on hand. The list will be reviewed periodically by the Government to ensure completeness and accuracy. Partial payment may be withheld for equipment not incorporated in the list at the discretion of the Contracting Officer. The list shall include on each item as applicable: description, manufacturer, model or catalog No., serial No., input (power, voltage, BTU, tons, etc.), size or capacity (e.g. tanks), installation location, net inventory costs; any other data necessary to describe item. Final list shall be turned over to the Contracting Officer 60 days prior to prefinal inspection.

1.2 SCRAP MATERIAL

Materials specified to be removed and become the property of the contractor are designated as scrap, and the bidder should make due allowance in his bid for the value, if any, of such scrap.

1.3 MATERIALS FROM GOVERNMENT-OWNED AREAS

Subsequent to contract award, the Contractor may investigate Government-owned areas, not reserved for other purposes, as potential sources of construction materials to be used only under this contract by him or by his subcontractors. Permission for the use of such additional sources shall be within the discretion of the Contracting Officer only, and if granted, shall be accomplished by separate negotiations in the form of a Change to this contract. It is understood, however, that the Government does not guarantee the availability of such additional sources nor the permission for use of same, if available, and therefore, the successful bidder's plan of operations should not include or be conditioned upon the prospective use of such additional sources. In the production of aggregate (sand or gravel), stone or riprap, or other materials from designated Government-owned land to satisfy the requirements of this contract, any excess materials which are produced by the Contractor over and above requirements for the work will become the property of the Government. Such materials will be left in the stockpiles or wasted in the designated waste areas as normal cleanup, as directed by the Contracting Officer. No materials produced from Government-owned land may be sold by the Contractor except where another Government contract provides for obtaining of material from the Government-owned land. Such sale of materials shall be subject to the approval of the Contracting Officer.

PART 2 PRODUCTS (NOT APPLICABLE)

PART 3 EXECUTION (NOT APPLICABLE)

--End of Section--
-- End of Section --

SECTION 01700

CONTRACT CLOSEOUT

PART 1 GENERAL

1.1 WARRANTY OF CONSTRUCTION (APR 1984)

1.1.1 General

See Paragraph "Warranty of Construction" in Section 00800 - SPECIAL CONTRACT REQUIREMENTS

1.2 PREWARRANTY CONFERENCE

Prior to contract completion and at a time designated by the Contracting Officer or his representative, the Contractor shall meet with the Contracting Officer to develop a mutual understanding with respect to the requirements of Paragraph: WARRANTY OF CONSTRUCTION. The Contracting Officer shall establish communication procedures for Contractor notification of warranty defects, priorities with respect to the type of defect and reasonable time required for Contractor response, and other details deemed necessary by the Contracting Officer for the execution of the construction warranty.

1.3 AS-BUILT DRAWINGS

1.3.1 General

The Contractor shall prepare the as-built drawings for this project. The Contractor shall furnish three full size sets of blue-line prints for use in his preparation of as-built drawings. The as-built drawings shall be a record of the construction as installed and completed by the Contractor. They shall include the information shown on the contract set of drawings and a record of deviations, modifications, or changes from those drawings, however minor, which were incorporated into the work, additional work not appearing on the contract drawings, and changes which are made after final inspection of the work. If additional work changes the as-built conditions after submission of the as-built drawings, the Contractor shall furnish revised or additional drawings to depict as-built conditions.

1.3.2 Preliminary As-Built Drawings

The Contractor shall maintain one set of paper prints which shall show the as-built conditions and which shall be kept current and available on the jobsite at all times. Changes from the contract plans which are made in the work or additional information uncovered in the course of construction shall be accurately and neatly recorded as they occur by means of details and notes. The as-built marked prints shall be jointly inspected for accuracy and completeness by the Contracting Officer and the Contractor prior to submission of each monthly pay estimate. The drawings shall show the following information, but not be limited thereto:

a. The location and description of utility lines or other installations of any kind or description known to exist within the construction area. Exterior utilities shall be located in both the horizontal and vertical planes. Dimensions shall be within an accuracy of approximately 6 inches. Vertical location shall be referenced to finished grade or floor level and the horizontal location referenced to

a permanent structure such as the face of a building or street curb.

b. The location and dimensions of changes within the building or structure.

c. Correct grade or alignment of roads, structures, or utilities if changes were made from contract plans.

d. Correct elevations if changes were made in site grading.

e. Changes in details of design or additional information obtained from shop drawings prepared or furnished by the Contractor including but not limited to fabrication, erection, installation plans and placing details, pipe sizes, insulation material, dimensions of equipment foundations, etc.

f. The topography and grades of drainage constructed or affected as a part of the construction.

g. Changes or modifications resulting from the final inspection.

h. Where contract drawings or specifications allow options, the option selected for construction shall be shown on the as-built drawings.

1.3.3 Submittal to Contracting Officer for Review and Approval

Two copies of the preliminary as-built marked prints shall be delivered to the Contracting Officer at the time of final inspection for his review and approval. Upon approval, one copy of the as-built marked prints will be returned to the Contractor. If upon review, the drawings are found to contain errors or omissions, they will be returned to the Contractor for corrections. The Contractor will complete the corrections and return the drawings to the Contracting Officer within 10 calendar days.

1.3.4 Final Drawings

Final As-built drawings will be prepared by the Government at no cost to the Contractor.

1.4 OPERATING AND MAINTENANCE INSTRUCTIONS

1.5 GENERAL

Operating and maintenance (O&M) instructions shall be furnished for equipment and systems as required in the SPECIFICATIONS. The operating and maintenance instructions shall include two separate manuals, an Operations Manual and a Maintenance Manual, and shall include framed instructions when required by the specific section. Each system or piece of equipment shall be covered in the two separate manuals regardless of the number of suppliers or subcontractors involved. Combining more than one system or piece of equipment into the same manuals may be permitted if the manuals are indexed by section and do not exceed 4 inches in thickness. Data submitted for the manual shall be in addition to that furnished as shop drawings. Unless otherwise specified in the SPECIFICATIONS, the Contractor shall assemble six complete bound Operations Manuals and six complete bound Maintenance Manuals. Operations and maintenance data shall be submitted within 30 days after approval of the equipment or system and not less than 60 days prior to scheduled testing. Operations and maintenance data shall also be submitted and approved by the time the project reaches 90 percent completion. If O & M data cannot be completed

until equipment or systems have been tested and balanced, a draft copy shall be submitted within the specified time. The completed O & M data shall then be submitted within 30 days after the completion of such testing and balancing.

Unless otherwise authorized by the Contracting Officer, the Government will not accept the equipment or systems nor will the Government take possession of the associated work until O & M data are submitted and approved.

1.5.1 Manuals

Operations and maintenance manuals shall be assembled in a durable stiff (hard) covered binder for 8-1/2 by 11-inch sheets with slide binding or screwpost fastening for replacement. Loose-leaf ring binders shall not be used. A permanently printed title on the covers shall show the project name, contract number, and the name of the equipment or system. Shop assembly or special drawings for manuals or parts catalogs shall be of a size that requires folding only a left-to-right coordinate. Each sheet shall be numbered and an index shall be provided. All standard catalog cuts, manufacture's data, parts sheets, or illustrations, shall be originals. A warning page shall be provided to warn of potential dangers, such as high voltage, toxic chemicals, flammable liquids, explosive materials, carcinogens, or high pressures. The warning page shall be placed inside the front cover or tab page if more than one section is combined, in front of the title page. The title page shall show the name of the preparing firm (designer or contractor) and the date of publication. All nonapplicable data such as descriptions of other models and optional equipment not included shall be marked out or all applicable data shall be distinctly highlighted. If reference is made to other drawings or data, they shall be included. Manuals shall include the following information for each item of equipment or system:

1.5.1.1.1 Operations Manual

The Operations Manual shall show operating procedures, sequences, and precautions. The Contractor shall coordinate subcontractors, suppliers, and manufacturers to assure complete submittals on interrelated components. Include adequate illustrative material to identify and locate operating controls, indicating devices and locations of areas or items requiring operation or adjustments. As a minimum, the manual shall include piping and equipment layout and simplified wiring and control diagrams of the complete system as installed. Describe, in detail, starting and stopping procedures for components, adjustments required to obtain optimum equipment performance, and corrective actions for malfunctions. Catalog cuts describing equipment operating procedures shall not be used as system operating instructions.

1.5.1.2 Maintenance Manual

The Maintenance manual shall provide instructions for routine and preventive maintenance showing lubrication, dismantling, assembly, repair, and adjustment, electric schematic and connection diagrams, hydraulic circuit diagrams with control and relief valve settings, control and interlock system diagrams, and lists of special tools required. Lubrication instructions shall be for service intended and shall include tables indicating items, frequencies, grades, and types of lubricants. Instructions shall include clearances, bolt torques, pressure settings, and other data. The nature and frequency of routine maintenance and procedures shall be indicated. The materials and test equipment that may be required

shall be noted. Performance sheets and graphs, as applicable, showing capacity data, efficiencies, electrical characteristics, pressure drops, and flow rates shall be included. Marked-up catalogs or catalog pages shall not be used for this purpose. Performance information shall be presented concisely and shall contain only data pertaining to equipment actually installed.

Spare parts data and catalogs showing identification, nomenclature, part numbers, required parts, recommended spare parts stocked, and spare parts supplied shall be included. Local source of parts and dated current price list shall be included. Data shall match equipment furnished. Standard catalog data may be used only if irrelevant parts are marked out or relevant parts are clearly identified. Repair information shall show diagrams and schematics, guidance for diagnosing problems, and detailed instructions for making repairs. Troubleshooting information shall be provided that includes a statement of the indication or symptom of trouble and the sequential instructions necessary. Test hookups to determine the cause of trouble, special tools and test equipment, and methods for returning the equipment to operating conditions shall be identified. Information may be in chart form or in tabular format with appropriate headings.

1.5.2 Framed Instructions

Framed instructions shall include as-built schematics of all wiring, controls, piping, etc., necessary for the operation of the equipment or system, and condensed, printed description of the system and of the operating procedure. The framed data may include approved shop drawings, layout drawings, riser and block diagrams and shall indicate all necessary interrelationships with other equipment and systems. The operating instructions shall explain equipment or system prestart checkout, start-up and shut-down procedures, safety precautions, preventive maintenance procedures, and normal operations checks for satisfactory performance of the equipment or system. The framed data may be presented in one or several frames, under glass or plexiglas, for clarity and convenience of location. The framed data presentation and outline shall be acceptable to the Contracting Officer and posted at locations designated by the Contracting Officer. The data shall be posted before personnel training or performance testing acceptance for the related items of equipment or system.

1.6 TRAINING

Formal classroom and on-site training shall be provided as required in other sections of these Specifications. If significant changes or modifications in the equipment or systems are made during the term of the contract after instructions have been concluded, additional instructions shall be provided to acquaint the O&M personnel with the changes or modifications.

The Contractor shall videotape all formal classroom and on-site instruction training sessions. The Contractor shall provide equipment, material and trained personnel to record the sessions using VHS audio-video recording format. Upon completion of the training instructions, the recordings shall become the property of the Government. The recordings shall be indentified, indexed, and placed in appropriate approved storage containers for submittal to the Contracting Officer."

1.7 PAYMENT VALUES FOR O&M MANUALS AND AS-BUILT DRAWINGS (SWD LTR 8/2/90 & MEMO ES-Q DTD 1 JUN 94)

1.7.1 O & M Manuals

The estimated value for O&M manuals is considered by the Government to be $9,000. Payments will be made for this work only upon receipt and approval of O&M data as required in paragraphs "Operating and Maintenance Instructions" and "Training" above. Payment in the amount of 50 percent of the estimated value may be made upon receipt and approval of the draft O&M data as specified in paragraph "Operating and Maintenance Instructions," provided all other submittals have been submitted and approved.

1.7.2 As-Built Drawings

The estimated value of as-built drawings is considered by the Government to be $24,700. Payments will be made for this work only upon receipt and approval of final as-built drawings as required in paragraph "As-Built Drawings" above.

PART 2 PRODUCTS (NOT APPLICABLE)

PART 3 EXECUTION (NOT APPLICABLE)

--End of Section--

-- End of Section --

US Army Corps
of Engineers
Tulsa District

TWO COMPANY SATELLITE FIRE STATION
FORT SILL, OKLAHOMA

PN: 45652 FY: 98

Volume 2 Specifications Divisions 2 through 16

PROFESSIONAL DESIGN GROUP
Consulting Engineers & Architects
3545 NW 58th Suite 200
Oklahoma City, Oklahoma 73112

APRIL 1998

SECTION 02050

DEMOLITION

PART 1 GENERAL

1.1 REFERENCES

The publications listed below form a part of this specification to the extent referenced. The publications are referred to in the text by basic designation only.

ENGINEERING MANUALS (EM)

EM 385-1-1 (1992) U.S. Army Corps of Engineers Safety and Health Requirements Manual

1.2 GENERAL REQUIREMENTS

The work includes demolition and removal of resulting rubbish and debris. Rubbish and debris shall be removed from Government property daily, unless otherwise directed, to avoid accumulation at the demolition site. Materials that cannot be removed daily shall be stored in areas specified by the Contracting Officer. In the interest of occupational safety and health, the work shall be performed in accordance with EM 385-1-1, Section 23, Demolition, and other applicable Sections.

1.3 DUST CONTROL

The amount of dust resulting from demolition shall be controlled to prevent the spread of dust to the construction site and to avoid creation of a nuisance in the surrounding area. Use of water will not be permitted when it will result in, or create, hazardous or objectionable conditions such as ice, flooding and pollution.

1.4 PROTECTION

1.4.1 Protection of Personnel

During the demolition work the Contractor shall continuously evaluate the condition of the construction area and take immediate action to protect all personnel working in and around the demolition site. No trench, hole, or other element will be allowed to be left standing without sufficient bracing, shoring, or lateral support to prevent collapse or failure while workmen remove debris or perform other work in the immediate area.

The Contractor shall ensure that no elements determined to be unstable are left unsupported and shall be responsible for placing and securing bracing, shoring, or lateral supports as may be required as a result of any cutting, removal, or demolition work performed under this contract.

The Contractor shall ensure that all personnel are protected from street traffic while working in the immediate area.

The Contractor shall ensure that all personnel are protected when working in the vicinity of overhead electric lines and underground gas lines.

1.4.2 Protection of Existing Property

Before beginning any demolition work, the Contractor shall survey the site and examine the drawings and specifications to determine the extent of the work. The Contractor shall take necessary precautions to avoid damage to existing items to remain in place, to be reused, or to remain the property of the Government; any damaged items shall be repaired or replaced as approved by the Contracting Officer. The Contractor shall coordinate the work of this section with all other work and shall construct and maintain shoring, bracing, and supports as required.

1.5 BURNING

The use of burning at the project site for the disposal of refuse and debris will not be permitted.

1.6 USE OF EXPLOSIVES

Use of explosives will not be permitted.

PART 2 PRODUCTS (Not Applicable)

PART 3 EXECUTION

3.1 EXISTING IMPROVEMENTS

Remove existing above-grade and below-grade improvements as indicated. Remove storm sewer, gas line, pavement, curb and gutter, sidewalks, and other improvements as necessary to facilitate new construction.

3.2 UTILITIES

Existing utilities shall be removed as indicated. Coordinate disruption of utility services with Contracting Officer. When utility lines are encountered that are not indicated on the drawings, the Contracting Officer shall be notified prior to further work in that area.

3.3 FILLING

Holes shall be filled in accordance with Section 02210.

3.4 DISPOSITION OF MATERIAL

Title to material to be demolished is vested in the Contractor upon receipt of notice to proceed. The Government will not be responsible for the condition, loss or damage to such property after notice to proceed.

Concrete, masonry, asphalt and other material shall be disposed of in the disposal area.

3.5 CLEAN UP

Debris and rubbish shall be removed and transported in a manner that prevents spillage on streets or adjacent areas. Local regulations regarding hauling and disposal shall apply.

-- End of Section --

SECTION 02210

GRADING

PART 1 GENERAL

1.1 REFERENCES

The publications listed below form a part of this specification to the extent referenced. The publications are referred to in the text by basic designation only.

AMERICAN SOCIETY FOR TESTING AND MATERIALS (ASTM)

ASTM C 136 (1984a) Sieve Analysis of Fine and Coarse Aggregates

ASTM D 422 (1963, R-1990) Particle Size Analysis of Soils

ASTM D 1556 (1990) Density and Unit Weight of Soil in Place by the Sand-Cone Method

ASTM D 1557 (1991) Laboratory Compaction Characteristics of Soil Using Modified Effort (56,000 ft-lbf/cu. ft. (2,700 kN-m/cu.m.))

ASTM D 2167 (1984; R 1990) Density and Unit Weight of Soil in Place by the Rubber Balloon Method

ASTM D 2216 (1992) Laboratory Determination of Water (Moisture) Content of Soil and Rock

ASTM D 2487 (1990) Classification of Soils for Engineering Purposes

ASTM D 2922 (1991) Density of Soil and Soil-Aggregate in Place by Nuclear Methods (Shallow Depth)

ASTM D 4253 (1991) Maximum Index Density and Unit Weight of Soils Using a Vibratory Table

ASTM D 4643 (1987) Determination of Water (Moisture) Content of Soil by the Microwave Oven Method

1.2 DEFINITIONS

1.2.1 Satisfactory Materials

Materials classified in ASTM D 2487 as GW, GP, SW, GC, GM, SP, SM, SC, CL, AND CH and shall be free from roots and other organic matter, trash, debris, and frozen materials and stones larger than 6 inches in any dimension are satisfactory.

1.2.2 Unsatisfactory Materials

Materials which do not comply with the requirements for satisfactory materials are unsatisfactory. Materials classified in ASTM D 2487 as Pt, OH, OL, ML, AND MH and any other materials not defined as satisfactory.

1.2.3 Cohesionless and Cohesive Materials

Cohesive materials include materials classified as GC, SC, ML, CL, MH, and CH. Cohesionless materials include materials classified in ASTM D 2487as GW, GP, SW, and SP. Materials classified as GM and SM will be identified as cohesionless only when the fines have a plasticity index of zero.

1.2.4 Degree of Compaction

Degree of compaction is a percentage of the maximum laboratory dry density obtained by the test procedure presented in ASTM D 1557 or ASTM D 4253. ASTM D 1557 shall be used for soils containing 15 percent or more passing the no. 200 sieve (fines). ASTM D 4253 shall be used for soils containing 5 percent or less fines. The maximum laboratory dry density for soils containing between 5 and 15 percent fines shall be determined by the above procedure yielding the highest laboratory dry density. The percentage of material passing the no. 200 sieve shall be determined in accordance with ASTM D 4253. Degree of compaction shall be expressed as a percentage of the maximum laboratory dry density obtained by the appropriate procedure as defined above. Percentage of maximum laboratory dry density has been abbreviated hereinafter as percent laboratory maximum density.

1.2.5 Nonexpansive Fill

Nonexpansive fill shall be satisfactory material having a plasticity index less than or equal to 12.

1.2.6 Topsoil

Material obtained from on-site excavations, suitable for topsoils, is defined as fertile, friable, natural loam, surface soil, reasonably free of subsoil, clay lumps, brush, weeds, and other litter. Material shall be free of roots, stumps, stones larger than 2" in any dimension, and other extraneous or toxic matter harmful to plant growth. Topsoil shall be capable of sustaining healthy plant growth..

1.3 SUBMITTALS

Government approval is required for submittals with a "GA" designation; submittals having an "FIO" designation are for information only. The following shall be submitted in accordance with Section 01300 SUBMITTAL DESCRIPTIONS:

SD-08 Statements

Field Testing Control; FIO.

Qualifications of the commercial testing laboratory who will be performing all testing in accordance with paragraph FIELD TESTING CONTROL.

SD-09 Reports

Field Testing Control; FIO. Satisfactory Materials; FIO.

Certified test reports and analysis certifying that the satisfactory materials proposed for use at the project site

conform to the specified requirements, and for all tests conducted in accordance with paragraph FIELD TESTING CONTROL.

1.4 SUBSURFACE DATA

Subsurface soil boring logs are shown on the drawings. These data represent the best subsurface information available; however, variations may exist in the subsurface between boring locations.

PART 2 PRODUCTS

2.1 BORROW MATERIAL

Where satisfactory materials are not available in sufficient quantity from required excavations, approved materials shall be obtained off site by Contractor.

2.1.1 Selection

Borrow materials shall be obtained from sources outside the limits of Government-controlled land. Borrow materials shall be subject to approval. The source of borrow material shall be the Contractor's responsibility. Unless otherwise provided in the contract, the Contractor shall obtain from the owners the right to procure material, shall pay all royalties and other charges involved, and shall bear all the expense of developing the sources, including rights-of-way for hauling.

2.2.2 Borrow Pits

Except as otherwise permitted, borrow pits shall be excavated to afford adequate drainage. Overburden and other spoil material shall be disposed of or used for special purposes. Borrow pits shall be neatly trimmed after the excavation is completed.

PART 3 EXECUTION

3.1 CONSERVATION OF TOPSOIL

Topsoil shall be removed to whatever depths encountered, a minimum depth of 4 inches, without contamination with subsoil and stockpiled convenient to areas for later application or at locations specified. Topsoil shall be removed to full depth and shall be stored separate from other excavated materials and piled free of roots, stones, and other undesirable materials. Any surplus of topsoil from excavations and grading shall be removed from the site.

3.2 EXCAVATION

After topsoil removal has been completed, excavation of every description, regardless of material encountered, within the grading limits of the project shall be performed to the lines and grades indicated. Satisfactory excavation material shall be transported to and placed in fill areas within the limits of the work. All unsatisfactory material including any soil which is disturbed by the Contractor's operations or softened due to exposure to the elements and water and surplus material shall be removed from site and disposed of at locations indicated on the plans. In the event that it is necessary to remove unsatisfactory material to a depth greater than specified, the Contracting

Officer shall be notified and an adjustment in the contract price will be considered in accordance with the contract. Excavations carried below the depths indicated, without specific directions, shall, except as otherwise specified, be refilled to the proper grade with satisfactory material as directed. All additional work of this nature shall be at the Contractor's expense. Excavation and filling shall be performed in a manner and sequence that will provide drainage at all times. Excavations shall be kept free from water while construction therein is in progress. Material required for fills in excess of that produced by excavation within the grading limits shall be obtained from borrow areas.

3.3 DITCHES, GUTTERS, AND CHANNEL CHANGES

Ditches, gutters, and channel changes shall be cut accurately to the cross sections and grades indicated. All roots, stumps, rock, and foreign matter in the sides and bottom of ditches, gutters, and channel changes shall be trimmed and dressed or removed to conform to the slope, grade, and shape of the section indicated. Care shall be taken not to excavate ditches and gutters below the grades indicated. Excessive ditch and gutter excavation shall be backfilled to grade either with satisfactory, thoroughly compacted material or with suitable stone or cobble to form an adequate gutter paving as directed. All ditches and gutters excavated under this section shall be maintained until final acceptance of the work. Satisfactory material excavated from ditches and channel changes shall be placed in fill areas. Unsatisfactory and excess excavated material shall be disposed of in accordance with directions in paragraph EXCAVATION. No excavated material shall be deposited closer to the edges of the ditches than indicated and in no case less than 3 feet.

3.4 BACKFILL ADJACENT TO STRUCTURES

Backfill adjacent to structures shall be placed and compacted uniformly in such manner as to prevent wedging action or eccentric loading upon or against the structures. Slopes bounding or within areas to be backfilled shall be stepped or serrated to prevent sliding of the fill. During backfilling operations and in the formation of embankments, equipment that will overload the structure in passing over and compacting these fills shall not be used. Backfill for storm drains and subdrains, including the bedding and backfill for structures other than culverts and drains, shall conform to the additional requirements in other applicable sections.

3.5 PREPARATION OF GROUND SURFACE FOR FILL

All vegetation, such as roots, brush, heavy sods, heavy growth of grass, and all decayed vegetable matter, rubbish, and other unsatisfactory material within the area upon which fill is to be placed, shall be stripped or otherwise removed before the fill is started. In no case will unsatisfactory material remain in or under the fill area. Sloped ground surfaces steeper than one vertical to four horizontal on which fill is to be placed shall be plowed, stepped, or broken up, as directed, in such manner that the fill material will bond with the existing surface. Prepared surfaces on which compacted fill is to be placed shall be wetted or dried as may be required to obtain the specified moisture content and density.

3.6 FILLS AND EMBANKMENTS

Fills and embankments shall be constructed at the locations and to lines and grades indicated. The completed fill shall conform to the shape of the typical sections indicated or shall meet the requirements of the particular case. Satisfactory material obtained during excavation may be used in forming required fill. Fill shall be satisfactory material and shall be reasonably free from roots, other organic material, and trash and from stones having a maximum diameter greater than 6 inches. No frozen material will be permitted in the fill. Stones having a dimension greater than 4 inches shall not be permitted in the upper 6 inches of fill or embankment. The material shall be placed in successive horizontal layers of 8 inches in loose depth for the full width of the cross section and shall be compacted as specified. Each layer shall be compacted before the overlaying lift is placed. Moisture content of the fill or backfill material shall be adjusted by wetting or aerating, as required, to within plus or minus 3 percent of optimum moisture content as determined from laboratory tests specified in paragraph DEFINITIONS.

3.7 COMPACTION

Except for paved areas, each layer of the fill or embankment shall be compacted to at least 90 percent of laboratory maximum density. Areas to be paved and other areas indicated as requiring compaction suitable for paved areas shall be compacted to at least 90 percent of maximum laboratory density and 95 percent of maximum laboratory density for the applicable ASTM D1557 and ASTM D 4253 procedure, respectively.

3.8 FINISHED EXCAVATION, FILLS, AND EMBANKMENTS

All areas covered by the project, including excavated and filled sections and adjacent transition areas, shall be uniformly smooth-graded. The finished surface shall be reasonably smooth, compacted, and free from irregular surface changes. The degree of finish shall be that ordinarily obtainable from blade-grader operations, except as otherwise specified. Ditches and gutters shall be finished to permit adequate drainage. The surface of areas to be turfed shall be finished to a smoothness suitable for the application of turfing materials. For subgrade areas to be paved, the following shall be accomplished as required: (a) soft or otherwise unsatisfactory material shall be replaced with satisfactory excavated material or other approved materials; (b) rock encountered in the cut sections shall be excavated to a depth of 6 inches below finished grade for the subgrade; (c) low areas resulting from removal of unsatisfactory material or from excavation of rock shall be brought up to required grade with satisfactory materials, and the entire subgrade shall be shaped to line, grade, and cross section and shall be compacted as specified. The surface of embankments or excavated areas for road construction or other areas on which a base course or pavement is to be placed shall vary not more than 0.05 foot from the established grade and approved cross section. Surfaces other than those that are to be paved shall be finished not more than 0.15 foot above or below the established grade or approved cross section. All areas shall be graded to drain without ponding water, regardless of the preceding grading tolerances.

3.9 PLACING TOPSOIL

On areas to receive topsoil, the compacted subgrade soil shall be scarified to a 2-inch depth for bonding of topsoil with subsoil. Topsoil then shall be spread evenly to a minimum thickness of 6 inches and graded to the elevations and slopes shown. Topsoil shall not be spread when frozen or excessively wet or dry. Material required for topsoil in excess of that produced by excavation within the grading limits shall be obtained from off-site areas.

3.10 FIELD TESTING CONTROL

Testing shall be the responsibility of the Contractor and shall be performed at no additional cost to the Government. Testing shall be performed by an approved commercial testing laboratory or may be performed by the Contractor subject to approval. If the Contractor elects to establish testing facilities, no work requiring testing will be permitted until the Contractor's facilities have been inspected and approved by the Contracting Officer. Moisture contents shall be determined in accordance with ASTM D 4643 and/or ASTM D 2216. If the ASTM D 4643 procedure is used, moisture contents shall be checked by the ASTM D 2216 procedure once per each 10 ASTM D 4643 tests. Field in-place density shall be determined in accordance with ASTM D 1556 or ASTM D 2922. If ASTM D 2922 is used, in-place densities shall be checked by the ASTM D 1556 procedure at a frequency on one sand cone test for each 8 nuclear density tests and not less than one sand cone density test per lift. The sand cone test shall be performed adjacent to the location where a nuclear density test was performed to insure a proper correlation is established between the two density test procedures. When test results indicate, as determined by the Contracting Officer, that compaction is not as specified, the material shall be removed, replaced and recompacted to meet specification requirements, at no additional expense to the Government. Tests on recompacted areas shall be performed to determine conformance with specification requirements. The following number of tests, if performed at the appropriate time, shall be the minimum acceptable for each type operation. Field density and moisture content tests shall be performed at a frequency of once each 5,000 square feet per lift of fill placed.

3.10.1 Moisture Content

Moisture contents shall be determined on materials obtained from each density sample location.

3.10.2 Optimum Moisture and Laboratory Maximum Dry Density

The laboratory maximum dry density shall be determined from materials obtained at a sand cone test location using the appropriate procedure specified in Part 1 above. When ASTM D 1557 is used, the optimum moisture content shall be determined. A minimum of one laboratory maximum dry density test shall be run each placement day or fraction thereof. Additional laboratory maximum dry density tests shall be run for each material change.

3.11 PROTECTION

Newly graded areas shall be protected from traffic and from erosion, and any settlement or washing away that may occur from any cause, prior to acceptance, shall be repaired and grades reestablished to the required elevations and slopes. All work shall be conducted in accordance with the environmental protection requirements of the contract.

-- End of Section --

SECTION 02221

EXCAVATION, FILLING AND BACKFILLING FOR BUILDINGS

PART 1 GENERAL

1.1 REFERENCES

The publications listed below form a part of this specification to the extent referenced. The publications are referred to in the text by basic designation only.

AMERICAN SOCIETY FOR TESTING AND MATERIALS (ASTM)

ASTM D 1556	(1990) Density and Unit Weight of Soil in Place by the Sand-Cone Method
ASTM D 1557	(1991) Laboratory Compaction Characteristics of Soil Using Modified Effort (56,000 ft-lbf/cu. ft. (2,700 kN-m/cu.m.))
ASTM D 2216	(1992) Laboratory Determination of Water (Moisture) Content of Soil, and Rock
ASTM D 2487	(1993) Classification of Soils for Engineering Purposes (Unified Soil Classification System)
ASTM D 2922	(1991) Density of Soil and Soil-Aggregate in Place by Nuclear Methods (Shallow Depth)
ASTM D 2937	(1994) Density of Soil in Place by the Drive-Cylinder Method
ASTM D 3017	(1988; R 1993) Water Content of Soil and Rock in Place by Nuclear Methods (Shallow Depth)
ASTM D 4318	(1993) Liquid Limit, Plastic Limit, and Plasticity Index of Soils
ASTM D 4253	Maximum Index Density of Soils Using the Vibratory Table

1.2 DEFINITIONS

1.2.1 Degree of Compaction

Degree of compaction is a percentage of the maximum laboratory dry density obtained by the test procedure presented in ASTM D 1557 or ASTM D 4253. ASTM D 1557 shall be used for soils containing 15 percent or more passing the no. 200 sieve (fines). ASTM D 4253 shall be used for soils containing 5 percent or less fines. The maximum laboratory dry density for soils containing between 5 and 15 percent fines shall be determined by the above procedure yielding the highest laboratory dry density. Degree of compaction shall be expressed as a percentage of the maximum laboratory dry density obtained by

This section revised
by AMDT 0001

the appropriate procedure as defined above. Percentage of maximum laboratory dry density has been abbreviated hereinafter as percent laboratory maximum density or percent maximum density.

1.3 SUBMITTALS

Government approval is required for submittals with a “GA" designation; submittals having an "FIO" designation are for information only. The following shall be submitted in accordance with Section 01330 SUBMITTAL PROCEDURES:

SD-09 Reports

Field Density Tests; GA. Testing of Backfill Materials; GA.

Copies of all laboratory and field test reports within 24 hours of the completion of the test.

PART 2 PRODUCTS

2.1 MATERIALS

2.1.1 Satisfactory Materials

Satisfactory materials include materials classified in ASTM D 2487 as GW, GP, SW, CL, GM, SM, GC, SP, and SC and shall be free of trash, debris, roots or other organic matter, or stones larger than 3 inches in any dimension.

2.1.2 Unsatisfactory Materials

Unsatisfactory materials include materials classified in ASTM D 2487 as Pt, OH, OL, MH, CH, and ML and any other materials not defined as satisfactory.

2.1.3 Cohesionless and Cohesive Materials

Cohesionless materials include materials classified in ASTM D 2487 as GW, GP, SW, and SP. Cohesive materials include materials classified as GC, SC, ML, CL, MH, and CH. Materials classified as GM and SM will be identified as cohesionless only when the fines are nonplastic.

2.1.4 Expansive Soils

Expansive soils are defined as soils that have a plasticity index equal to or greater than 12 when tested in accordance with ASTM D 4318.

2.2 CAPILLARY WATER BARRIER

Capillary Water Barrier shall consist of clean, crushed, nonporous rock, crushed gravel, or uncrushed gravel. The maximum particle size shall be l-1/2 inches and no more than 2 percent by weight shall pass the No. 4 size sieve.

This section revised
by AMDT 0001

PART 3 EXECUTION

3.1 BUILDING PAD PREPARATION

All existing material within the building perimeter and to a point 5 feet outside the perimeter shall be excavated to a depth which is 5 feet below the finish floor elevation. The subgrade shall be "proof-rolled" to obtain 95% compaction. Building pad shall be brought to grade using non-expansive satisfactory fill and compacted to 95% at the optimum moisture content. Fill shall be placed in lifts not exceeding 8 inches loose depth. Each lift shall be tested before the next lift is placed.

3.2 CLEARING AND GRUBBING

Clearing and grubbing is specified in Section 02110 CLEARING AND GRUBBING.

3.3 TOPSOIL

Topsoil shall be stripped to a depth of 6 inches below existing grade within the designated excavations and grading lines and deposited in storage piles for later use. Excess topsoil shall be disposed as specified for excess excavated material.

3.4 EXCAVATION

Excavation shall conform to the dimensions and elevations indicated for each building, structure, and footing except as specified hereinafter, and shall include trenching for utility and foundation drainage systems to a point 5 feet beyond the building line of each building and structure, excavation for outside grease interceptors, underground fuel tanks, and all work incidental thereto. Excavation shall extend a sufficient distance from walls and footings to allow for placing and removal of forms. Excavations below indicated depths will not be permitted except to remove unsatisfactory material. Unsatisfactory material encountered below the grades shown shall be removed as directed and replaced with satisfactory material. Payment therefor will be made in conformance with the CHANGES clause of the CONTRACT CLAUSES. Satisfactory material removed below the depths indicated without specific direction of the Contracting Officer shall be replaced at no additional cost to the Government to the indicated excavation grade with satisfactory materials, except that concrete footings shall be increased in thickness to the bottom of the overdepth excavations and over-break in rock excavation. Satisfactory material shall be placed and compacted as specified in paragraph FILLING AND BACKFILLING. Determination of elevations and measurements of approved overdepth excavation of unsatisfactory material below grades indicated shall be done under the direction of the Contracting Officer.

3.5 DRAINAGE AND DEWATERING

3.5.1 Drainage

Surface water shall be directed away from excavation and construction sites so as to prevent erosion and undermining of foundations. Diversion ditches, dikes and grading shall be provided and maintained as necessary during construction. Excavated slopes and backfill surfaces shall be protected to

This section revised
by AMDT 0001

prevent erosion and sloughing. Excavation shall be performed so that the site and the area immediately surrounding the site and affecting operations at the site shall be continually and effectively drained.

3.5.2 Dewatering

Groundwater flowing toward or into excavations shall be controlled to prevent sloughing of excavation slopes and walls, boils, uplift and heave in the excavation and to eliminate interference with orderly progress of construction. French drains, sumps, ditches or trenches will not be permitted within 3 feet of the foundation of any structure, except with specific written approval, and after specific contractual provisions for restoration of the foundation area have been made. Control measures shall be taken by the time the excavation reaches the water level in order to maintain the integrity of the in situ material. While the excavation is open, the water level shall be maintained continuously, at least 2 feet below the working level.

3.6 SHORING

Shoring, including sheet piling, shall be furnished and installed as necessary to protect workmen, banks, adjacent paving, structures, and utilities. Shoring, bracing, and sheeting shall be removed as excavations are backfilled, in a manner to prevent caving.

3.7 CLASSIFICATION OF EXCAVATION

Excavation will be unclassified regardless of the nature of material encountered.

3.8 BLASTING

Blasting will not be permitted.

3.9 UTILITY AND DRAIN TRENCHES

Trenches for underground utilities systems and drain lines shall be excavated to the required alignments and depths. The bottoms of trenches shall be graded to secure the required slope and shall be tamped if necessary to provide a firm pipe bed. Recesses shall be excavated to accommodate bells and joints so that pipe will be uniformly supported for the entire length. Rock, where encountered, shall be excavated to a depth of at least 6 inches below the bottom of the pipe, and the overdepth shall be backfilled with satisfactory material placed and compacted in conformance with paragraph FILLING AND BACKFILLING.

3.10 BORROW

Where satisfactory materials are not available in sufficient quantity from required excavations, approved materials shall be obtained off site by Contractor.

This section revised
by AMDT 0001

3.11 EXCAVATED MATERIALS

Satisfactory excavated material required for fill or backfill shall be placed in the proper section of the permanent work required under this section or shall be separately stockpiled if it cannot be readily placed. Satisfactory material in excess of that required for the permanent work and all unsatisfactory material shall be disposed of off of Government controlled land.

3.12 FINAL GRADE OF SURFACES TO SUPPORT CONCRETE

Excavation to final grade shall not be made until just before concrete is to be placed. Only excavation methods that will leave the foundation soil in a solid and unshattered condition shall be used. Approximately level surfaces shall be roughened, and sloped surfaces shall be cut as indicated into rough steps or benches to provide a satisfactory bond. Shales shall be protected from slaking or other erosion resulting from ponding or flow of water.

3.13 SUBGRADE PREPARATION

Unsatisfactory material in surfaces to receive fill or in excavated areas shall be removed and replaced with satisfactory materials. The surface shall be scarified to a depth of 6 inches before the fill is started. Sloped surfaces steeper than 1 vertical to 4 horizontal shall be plowed, stepped, benched, or broken up so that the fill material will bond with the existing material. When subgrades are less than the specified density, the ground surface shall be broken up to a minimum depth of 6 inches, pulverized, and compacted to the specified density. When the subgrade is part fill and part excavation or natural ground, the excavated or natural ground portion shall be scarified to a depth of 12 inches and compacted as specified for the adjacent fill. Material shall not be placed on surfaces that are muddy, frozen, or contain frost. Compaction shall be accomplished by sheepsfoot rollers, pneumatic-tired rollers, steel-wheeled rollers, or other approved equipment well suited to the soil being compacted. Material shall be moistened or aerated as necessary to provide the moisture content that will readily facilitate obtaining the specified compaction with the equipment used. Minimum subgrade density shall be as specified in paragraph FILLING AND BACKFILLING.

3.14 FILLING AND BACKFILLING

Satisfactory materials shall be used in bringing fills and backfills to the lines and grades indicated and for replacing unsatisfactory materials. Satisfactory materials shall be placed in horizontal layers not exceeding 8 inches in loose thickness, or 6 inches when hand-operated compactors are used. After placing, each layer shall be plowed, disked, or otherwise broken up, moistened or aerated as necessary, thoroughly mixed and compacted as specified. Backfilling shall not begin until construction below finish grade has been approved, underground utilities systems have been inspected, tested and approved, forms removed, and the excavation cleaned of trash and debris. Backfill shall be brought to indicated finish grade and shall include backfill for outside grease interceptors and underground fuel tanks. Backfill shall not be placed in wet or frozen areas. Where pipe is coated or wrapped for protection against corrosion, the backfill material up to an elevation 2 feet above sewer lines and 1 foot above other utility lines shall be free from

This section revised
by AMDT 0001

stones larger than 1 inch in any dimension. Heavy equipment for spreading and compacting backfill shall not be operated closer to foundation or retaining walls than a distance equal to the height of backfill above the top of footing; the area remaining shall be compacted in layers not more than 4 inches in compacted thickness with power-driven hand tampers suitable for the material being compacted. Backfill shall be placed carefully around pipes or tanks to avoid damage to coatings, wrappings, or tanks. Backfill shall not be placed against foundation walls prior to 7 days after completion of the walls. As far as practicable, backfill shall be brought up evenly on each side of the wall and sloped to drain away from the wall. Each layer of fill and backfill shall be compacted to not less than the percentage of maximum density specified below:

	Percent Laboratory maximum density	
Fill, embankment, and backfill	ASTM D 1557	ASTM D 4253
Under structures, building slabs, steps, paved areas, around footings, and in trenches	92	95
Under sidewalks and grassed areas	85	90
Subgrade		
Under building slabs, steps, and paved areas, top 12 inches	90	95
Under sidewalks, top 6 inches	85	90

Approved compacted subgrades that are disturbed by the Contractor's operations or adverse weather shall be scarified and compacted as specified herein before to the required density prior to further construction thereon. Recompaction over underground utilities and heating lines shall be by hand tamping.

3.15 TESTING

Testing shall be the responsibility of the Contractor and shall be performed at no additional cost to the Government. Testing shall be performed by an approved commercial testing laboratory or may be performed by the Contractor subject to approval. Field in-place density shall be determined in accordance with ASTM D 1556 or ASTM D 2922. When ASTM D 2922 is used, the calibration curves shall be checked and adjusted if necessary by the procedure described in ASTM D 2922, paragraph ADJUSTING CALIBRATION CURVE. ASTM D 2922 results in a wet unit weight of soil and when using this method ASTM D 3017 shall be used to determine the moisture content of the soil. The calibration curves

This section revised
by AMDT 0001

furnished with the moisture gauges shall also be checked along with density calibration checks as described in ASTM D 3017. The calibration checks of both the density and moisture gauges shall be made at the beginning of a job on each different type of material encountered and at intervals as directed by the Contracting Officer. ASTM D 2937 shall be used only for soft, fine-grained, cohesive soils. The following number of tests, if performed at the appropriate time, shall be the minimum acceptable for each type operation.

3.15.1 In-Place Densities

3.15.1.1 In-Place Density of Subgrades

One test per 4000 square foot or fraction thereof.

3.15.1.2 In-Place Density of Fills and Backfills

One test per 2000 square foot or fraction thereof of each lift for fill or backfill areas compacted by other than hand or hand-operated machines. The density for each lift of fill or backfill materials for trenches, pits, building perimeters or other structures or areas less than 6 feet in width, which are compacted with hand or hand-operated m chines shall be tested as follows: One test per each area less than 100 square feet, or one test for each 50 linear foot of long narrow fills 50 feet or more in length. If ASTM D 2922 is used, in-place densities shall be checked by ASTM D 1556 as follows: One check per lift for each 100 linear feet of long narrow fills, and a minimum of 2 checks per lift for other fill and backfill areas.

3.15.2 Moisture Content

In the stockpile, excavation or borrow areas, a minimum of two tests per day per type of mate al or source of materials being placed is required during stable weather conditions. During unstable weather, tests shall be made as dictated by local conditions and approved moisture content shall be tested in accordance with ASTM D 2216.

3.15.3 Optimum Moisture and Laboratory Maximum Density

Tests shall be made for each type material or source of material including borrow material to determine the optimum moisture and laboratory maximum density values. One representative test per 100 cubic yards of fill and backfill, or when any change in material occurs which may affect the optimum moisture content or laboratory maximum density will be made.

3.16 CAPILLARY WATER BARRIER

Capillary water barrier under concrete floor and area-way slabs on grade shall be placed directly on the subgrade and shall be compacted with a minimum of two passes of a hand-operated plate-type vibratory compactor.

3.17 GRADING

Areas within 5 feet outside of each building and structure line shall be constructed true-to-grade, shaped to drain, and shall be maintained free of trash and debris until final inspection has been completed and the work has been accepted.

This section revised
by AMDT 0001

3.18 SPREADING TOPSOIL

Areas outside the building lines from which topsoil has been removed shall be topsoiled. The surface shall be free of materials that would hinder planting or maintenance operations. The subgrade shall be pulverized to a depth of 2 inches by disking or plowing for the bonding of topsoil with the subsoil. Topsoil shall then be uniformly spread, graded, and compacted to the thickness, elevations, slopes shown, and left free of surface irregularities. Topsoil shall be compacted by one pass of a cultipacker, roller, or other approved equipment weighing 100 to 160 pounds per linear foot of roller. Topsoil shall not be placed when the subgrade is frozen, excessively wet, extremely dry, or in a condition otherwise detrimental to seeding, planting, or proper grading.

3.19 PROTECTION

Settlement or washing that occurs in graded, topsoiled, or backfilled areas prior to acceptance of the work shall be repaired and grades reestablished to the required elevations and slopes.

-- End of Section --

This section revised
by AMDT 0001

SECTION 02222

EXCAVATION, TRENCHING, AND BACKFILLING FOR UTILITIES SYSTEMS

PART 1 GENERAL

1.1 REFERENCES

The publications listed below form a part of this specification to the extent referenced. The publications are referred to in the text by basic designation only.

AMERICAN SOCIETY FOR TESTING AND MATERIALS (ASTM)

ASTM D 422	(1963; R 1990) Particle-Size Analysis of Soils
ASTM D 1556	(1990) Density and Unit Weight of Soil in Place by the Sand-Cone Method
ASTM D 1557	(1991) Laboratory Compaction Characteristics of Soil Using Modified Effort (56,000 ft-lbf/cu. ft.)
ASTM D 2487	(1993) Classification of Soils for Engineering Purposes (Unified Soil Classification System
ASTM D 2922	(1991) Density of Soil and Soil-Aggregate in Place by Nuclear Methods (Shallow Depth)
ASTM D 3017	(1988; R 1993) Water Content of Soil and Rock in Place by Nuclear Methods (Shallow Depth)

1.2 DEFINITIONS

1.2.1 Degree of Compaction

Degree of compaction shall be expressed as a percentage of the maximum density obtained by the test procedure presented in ASTM D 1557.

1.3 SUBMITTALS

Government approval is required for submittals with a "GA" designation; submittals having an "FIO" designation are for information only. The following shall be submitted in accordance with Section 01330 SUBMITTAL PROCEDURES:

SD-09 Reports

Field Density Tests; FIO. Testing of Backfill Materials; GA.

Copies of all laboratory and field test reports within 24 hours of the completion of the test.

PART 2 PRODUCTS

2.1 MATERIALS

2.1.1 Satisfactory Materials

Satisfactory materials shall consist of any material classified by ASTM D 2487 as GW, GP, GC, GM, SW, SP, SM, SC, CH, and CL.

2.1.2 Unsatisfactory Materials

Unsatisfactory materials shall be materials that do not comply with the requirements for satisfactory materials. Unsatisfactory materials include but are not limited to those materials containing roots and other organic matter, trash, debris, frozen materials and stones larger than 3 inches, and materials classified in ASTM D 2487, as ML, MH, PT, OH, and OL. Unsatisfactory materials also include man-made fills, refuse, or backfills from previous construction.

2.1.3 Cohesionless and Cohesive Materials

Cohesionless materials shall include materials classified in ASTM D 2487 as GW, GP, SW, and SP. Cohesive materials include materials classified as GC, SC, ML, CL, MH, and CH. Materials classified as GM and SM will be identified as cohesionless only when the fines are nonplastic.

2.1.4 Rock

Rock shall consist of boulders measuring 1/2 cubic yard or more and materials that cannot be removed without systematic drilling and blasting such as rock material in ledges, bedded deposits, unstratified masses and conglomerate deposits, and below ground concrete or masonry structures, exceeding 1/2 cubic yard in volume, except that pavements will not be considered as rock.

2.1.5 Unyielding Material

Unyielding material shall consist of rock and gravelly soils with stones greater than 3 inches in any dimension or as defined by the pipe manufacturer, whichever is smaller.

2.1.6 Unstable Material

Unstable material shall consist of materials too wet to properly support the utility pipe, conduit, or appurtenant structure.

2.1.7 Select Granular Material

Select granular material shall consist of well-graded sand, gravel, crushed gravel, crushed stone or crushed slag composed of hard, tough and durable particles, and shall contain not more than 10 percent by weight of material passing a No. 200 mesh sieve and no less than 95 percent by weight passing the l inch sieve. The maximum allowable aggregate size shall be 2 inches, or the maximum size recommended by the pipe manufacturer, whichever is smaller.

2.1.8 Initial Backfill Material

Initial backfill material shall consist of select granular material. When the pipe is coated or wrapped for corrosion protection, the initial backfill material shall be free of stones larger than 2 inches in any dimension or as recommended by the pipe manufacturer, whichever is smaller.

2.1.9 Plastic Marking Tape

Plastic marking tape shall be acid and alkali-resistant polyethylene film, 6 inches wide with minimum thickness of 0.004 inch. Tape shall have a minimum strength of 1750 psi lengthwise and 1500 psi crosswise. The tape shall be manufactured with integral wires, foil backing or other means to enable detection by a metal detector when the tape is buried up to 3 feet deep. The tape shall be of a type specifically manufactured for marking and locating underground utilities. The metallic core of the tape shall be encased in a protective jacket or provided with other means to protect it from corrosion. Tape color shall be as specified in TABLE 1 and shall bear a continuous printed inscription describing the specific utility.

TABLE 1. Tape Color

Red:	
Electric Yellow:	Gas, Oil, Dangerous Materials
Orange:	Telephone, Telegraph, Television, Police, and Fire Communications
Blue:	Water Systems
Green:	Sewer Systems

PART 3 EXECUTION

3.1 EXCAVATION

Excavation shall be performed to the lines and grades indicated. Rock excavation shall include removal and disposition of material defined as rock in paragraph MATERIALS. Earth excavation shall include removal and disposal of material not classified as rock excavation. During excavation, material satisfactory for backfilling shall be stockpiled in an orderly manner at a distance from the banks of the trench equal to 1/2 the depth of the excavation, but in no instance closer than 2 feet. Excavated material not required or not satisfactory for backfill shall be removed from the site. Grading shall be done as may be necessary to prevent surface water from flowing into the excavation, and any water accumulating therein shall be removed to maintain the stability of the bottom and sides of the excavation. Unauthorized overexcavation shall be backfilled in accordance with paragraph BACKFILLING AND COMPACTION at no additional cost to the Government.

3.1.1 Trench Excavation

The trench shall be excavated as recommended by the manufacturer of the pipe to be installed. Trench walls below the top of the pipe shall be sloped, or made vertical, and of such width as recommended in the manufacturer's installation manual. Where no manufacturer's installation manual is available, trench walls shall be made vertical. Trench walls more than 4 feet high shall be shored, cut back to a stable slope, or provided with equivalent means of protection for employees who may be exposed to moving ground or cave in. Vertical trench walls more than 6 feet high shall be shored. Trench walls shall be cut according to the requirements of the COE Safety Manual. Special attention shall be given to slopes which may be adversely affected by weather or moisture content. The trench width below the top of pipe shall not exceed 24 inches plus pipe outside diameter (O.D.). Where recommended trench widths are exceeded, redesign, stronger pipe, or special installation procedures shall be utilized by the Contractor. The cost of redesign, stronger pipe, or special installation procedures shall be borne by the Contractor without any additional cost to the Government.

3.1.1.1 Bottom Preparation

The bottoms of trenches shall be accurately graded to provide uniform bearing and support for the bottom quadrant of each section of the pipe. Bell holes shall be excavated to the necessary size at each joint or coupling to eliminate point bearing. Stones of 3 inches or greater in any dimension, or as recommended by the pipe manufacturer, whichever is smaller, shall be removed to avoid point bearing.

3.1.1.2 Removal of Unyielding Material

Where unyielding material is encountered in the bottom of the trench, such material shall be removed 4 inches below the required grade and replaced with suitable materials as provided in paragraph BACKFILLING AND COMPACTION.

3.1.1.3 Removal of Unstable Material

Where unstable material is encountered in the bottom of the trench, such material shall be removed to the depth directed and replaced to the proper grade with select granular material as provided in paragraph BACKFILLING AND COMPACTION. When removal of unstable material is required due to the fault or neglect of the Contractor in his performance of the work, the resulting material shall be excavated and replaced by the Contractor without additional cost to the Government.

3.1.1.4 Excavation for Appurtenances

Excavation for structures shall be of sufficient size to permit the placement and removal of forms for the full length and width of structure footings and foundations as shown. Rock shall be cleaned of loose debris and cut to a firm surface either level, stepped, or serrated, as shown or as directed. Loose disintegrated rock and thin strata shall be removed. Removal of unstable material shall be as specified above. When concrete or masonry is to be placed in an excavated area, special care shall be taken not to disturb the bottom of the excavation. Excavation to the final grade level shall not be made until just before the concrete or masonry is to be placed.

3.1.1.5 Stockpiles

Stockpiles of satisfactory materials shall be placed and graded as specified. Stockpiles shall be kept in a neat and well drained condition, giving due consideration to drainage at all times. The ground surface at stockpile locations shall be cleared, grubbed, and sealed by rubber-tired equipment, excavated satisfactory and unsatisfactory materials shall be separately stockpiled. Stockpiles of satisfactory materials shall be protected from contamination which may destroy the quality and fitness of the stockpiled material. If the Contractor fails to protect the stockpiles, and any material becomes unsatisfactory, such material shall be removed and replaced with satisfactory material from approved sources at no additional cost to the Government.

3.2 BACKFILLING AND COMPACTION

Backfill material shall consist of satisfactory material or select granular material, as required. Backfill shall be placed in layers not exceeding 6 inches loose thickness for compaction by hand operated machine compactors, and 8 inches loose thickness for other than hand operated machines, unless otherwise specified. Each layer shall be compacted to at least 95 percent maximum density for cohesionless soils and 90 percent maximum density for cohesive soils, unless otherwise specified.

3.2.1 Trench Backfill

Trenches shall be backfilled to the grade shown. The trench shall be backfilled to 2 feet above the top of pipe prior to performing the required pressure tests. The joints and couplings shall be left uncovered during the pressure test.

3.2.1.1 Replacement of Unyielding Material

Unyielding material removed from the bottom of the trench shall be replaced with select granular material.

3.2.1.2 Replacement of Unstable Material

Unstable material removed from the bottom of the trench or excavation shall be replaced with select granular material placed in layers not exceeding 6 inches loose thickness.

3.2.1.3 Bedding and Initial Backfill

Bedding shall be of the type and thickness shown. Initial backfill material shall be placed and compacted with approved tampers to a height of at least one foot above the utility pipe or conduit. The backfill shall be brought up evenly on both sides of the pipe for the full length of the pipe. Care shall be taken to ensure thorough compaction of the fill under the haunches of the pipe.

3.2.1.4 Final Backfill

The remainder of the trench shall be filled with satisfactory material. Backfill material shall be placed and compacted as follows:

a. Parking Lots and Paved Areas: Backfill shall be placed up to the elevation at which the requirements in Section 02210 GRADING and Section 02225 EARTHWORK FOR ROADWAYS, RAILROADS, AND AIRFIELDS control. Water flooding or jetting methods of compaction will not be permitted.

b. Sidewalks, Turfed or Seeded Areas and Miscellaneous Areas: Backfill shall be deposited in layers of a maximum of 12 inch loose thickness, and compacted to 85 percent maximum density for cohesive soils and 90 percent maximum density for cohesionless soils. Compaction by water flooding or jetting will not be permitted. This requirement shall also apply to all other areas not specifically designated above.

3.3 SPECIAL REQUIREMENTS

Special requirements for both excavation and backfill relating to the specific utilities are as follows:

3.3.1 Gas Distribution

Trenches shall be excavated to a depth that will provide not less than 18 inches of cover in rock excavation and not less than 24 inches of cover in other excavation. Trenches shall be graded as specified for pipe-laying requirements in Section 02685 GAS DISTRIBUTION SYSTEM.

3.3.2 Water Lines

Trenches shall be of a depth to provide a minimum cover of 4 feet from the existing ground surface, or from the indicated finished grade, whichever is lower, to the top of the pipe.

3.3.3 Electrical Distribution System

Direct burial cable and conduit or duct line shall have a minimum cover of 24 inches from the finished grade, unless otherwise indicated. Special trenching requirements for direct-burial electrical cables and conduits are specified in Section 16375 ELECTRICAL DISTRIBUTION SYSTEM, UNDERGROUND.

3.3.4 Plastic Marking Tape

Warning tapes shall be installed directly above the pipe, at a depth of 18 inches below finished grade unless otherwise shown.

3.4 TESTING

Testing shall be the responsibility of the Contractor and shall be performed at no additional cost to the Government.

3.4.1 Testing Facilities

Tests shall be performed by an approved commercial testing laboratory or may be tested by facilities furnished by the Contractor. No work requiring testing will be permitted until the facilities have been inspected and approved by the Contracting Officer. The first inspection shall be at the expense of the Government. Cost incurred for any subsequent inspection required because of failure of the first inspection will be charged to the Contractor.

3.4.2 Testing of Backfill Materials

Characteristics of backfill materials shall be determined in accordance with particle size analysis of soils ASTM D 422 and moisture-density relations of soils ASTM D 1557. A minimum of one particle size analysis and one moisture-density relation test shall be performed on each different type of material used for bedding and backfill.

3.4.3 Field Density Tests

Tests shall be performed in sufficient numbers to ensure that the specified density is being obtained. A minimum of one field density test per lift of backfill shall be performed. One moisture density relationship shall be determined for every 1500 cubic yards of material used. Field in-place density shall be determined in accordance with ASTM D 1556 or ASTM D 2922. When ASTM D 2922 is used, the calibration curves shall be checked and adjusted using the sand cone method as described in paragraph Calibration of the ASTM publication. ASTM D 2922 results in a wet unit weight of soil and when using this method, ASTM D 3017 shall be used to determine the moisture content of the soil. The calibration curves furnished with the moisture gauges shall be checked along with density calibration checks as described in ASTM D 3017. The calibration checks of both the density and moisture gauges shall be made at the beginning of a job, on each different type of material encountered, and at the following intervals. Each 5th ASTM D 2922 test (nuclear) shall be checked by and ASTM D 1556 (sand cone) at the same location. Each 5th ASTM D 3017 test (nuclear) shall be checked by an ASTM D 2216 test (oven) at the same location. Copies of calibration curves, results of calibration tests, and field and laboratory density tests shall be furnished to the Contracting Officer. Trenches improperly compacted shall be reopened to the depth directed, then refilled and compacted to the density specified at no additional cost to the Government.

-- End of Section --

SECTION 02225

EARTHWORK FOR ROADWAYS, RAILROADS, AND AIRFIELDS

PART 1 GENERAL

1.1 REFERENCES

The publications listed below form a part of this specification to the extent referenced. The publications are referred to in the text by basic designation only.

AMERICAN SOCIETY FOR TESTING AND MATERIALS (ASTM)

ASTM C 136	(1995a) Sieve Analysis of Fine and Coarse Aggregates
ASTM D 422	(1963; R 1990) Particle-Size Analysis of Soils
ASTM D 1140	(1992) Amount of Material in Soils Finer than the No. 200 (75-micrometer) Sieve
ASTM D 1556	(1990) Density and Unit Weight of Soil in Place by the Sand-Cone Method
ASTM D 1557	(1991) Laboratory Compaction Characteristics of Soil Using Modified Effort (56,000 ft-lbf/cu. ft. (2,700 kN-m/cu. m.))
ASTM D 2487	(1993) Classification of Soils for Engineering Purposes (Unified Soil Classification System)
ASTM D 2922	(1991) Density of Soil and Soil-Aggregate in Place by Nuclear Methods (Shallow Depth)
ASTM D 3017	(1988; R 1993) Water Content of Soil and Rock in Place by Nuclear Methods (Shallow Depth)
ASTM D 4318	(1993) Liquid Limit, Plastic Limit, and Plasticity Index of Soils

1.2 DEFINITIONS

1.2.1 Satisfactory Materials

Satisfactory materials shall comprise any materials classified by, ASTM D 2487 as GW, GP, SW, GC, GM, SP, SM, SC, CL, and CH. Satisfactory materials for grading shall be free from roots and other organic matter, trash, debris, and frozen materials and stones larger than 6 inches in any dimension.

1.2.2 Unsatisfactory Materials

Materials which do not comply with the requirements for satisfactory materials are unsatisfactory. Materials classified in ASTM D 2487 as ML, MH, Pt, OH, and OL are unsatisfactory.

1.2.3 Cohesionless and Cohesive Materials

Cohesionless materials include materials classified in ASTM D 2487 as GW, GP, SW, and SP. Cohesive materials include materials classified as GC, SC, ML, CL, MH, and CH. Materials classified as GM and SM will be identified as cohesionless only when the fines are nonplastic. Testing required for classifying materials shall be in accordance with ASTM D 4318, ASTM C 136, ASTM D 422, and ASTM D 1140.

1.2.4 Degree of Compaction

Degree of compaction required is expressed as a percentage of the maximum density obtained by the test procedure presented in ASTM D 1557 abbreviated as a percent of laboratory maximum density.

1.2.5 Topsoil

Material suitable for topsoils is defined as natural, friable surface soil possessing the characteristics of representative soils in the vicinity that produce heavy growth of crops and grass. The soil shall be free of roots, stumps, stones larger than 2 inches in any dimension, diameter, and other extraneous or toxic matter harmful to plants.

1.3 SUBMITTALS

Government approval is required for submittals with a "GA" designation; submittals having an "FIO" designation are for information only. The following shall be submitted in accordance with Section 01330 SUBMITTAL PROCEDURES:

SD-08 Statements

Earthwork; FIO.

Procedure and location for disposal of unused satisfactory material. Blasting plan when blasting is permitted. Proposed source of borrow material.

SD-09 Reports

Testing; FIO.

Within 24 hours of conclusion of physical tests, 2 copies of test results, including calibration curves and results of calibration tests.

SD-13 Certificates

Testing; GA.

Qualifications of the commercial testing laboratory or Contractor's testing facilities.

SD-18 Records

Earthwork; FIO.

Notification of encountering rock in the project. Advance notice on the opening of excavation or borrow areas. Advance notice on shoulder construction for rigid pavements.

1.4 SUBSURFACE DATA

Subsurface soil boring logs are shown on the drawings. These data represent the best subsurface information available; however, variations may exist in the subsurface between boring locations.

1.5 CLASSIFICATION OF EXCAVATION

No consideration will be given to the nature of the materials, and all excavation will be designated as unclassified excavation.

1.6 BLASTING

Blasting will not be permitted.

1.7 UTILIZATION OF EXCAVATED MATERIALS

Unsatisfactory materials removed from excavations shall be disposed of in designated waste disposal or spoil areas. Satisfactory material removed from excavations shall be used, insofar as practicable, in the construction of fills, embankments, subgrades, bedding (as backfill), and for similar purposes. No satisfactory excavated material shall be wasted without specific written authorization. Satisfactory material authorized to be wasted shall be disposed of in designated areas approved for surplus material storage or designated waste areas as directed. No excavated material shall be disposed of to obstruct the flow of any stream, endanger a partly finished structure, impair the efficiency or appearance of any structure, or be detrimental to the completed work in any way.

PART 2 PRODUCTS (Not Applicable)

PART 3 EXECUTION

3.1 STRIPPING OF TOPSOIL

Topsoil shall be removed to whatever depths encountered, a minimum depth of 4 inches, without contamination with subsoil. Topsoil shall be spread on areas already graded and prepared for topsoil, or transported and deposited in stockpiles convenient to areas that are to receive application of the topsoil later, or at locations indicated or specified. Topsoil shall be kept separate from other excavated materials, brush, litter, objectionable weeds, roots, stones larger than 2 inches in diameter, and other materials that would interfere with planting and maintenance operations. Any surplus of topsoil from excavations and grading shall be removed from the site.

3.2 EXCAVATION

The Contractor shall perform excavation of every type of material encountered within the limits of the project to the lines, grades, and elevations indicated and as specified. Grading shall be in conformity with the typical sections shown and the tolerances specified in paragraph FINISHING. Satisfactory excavated materials shall be transported to and placed in fill or embankment within the limits of the work. Unsatisfactory materials encountered within the limits of the work shall be excavated below grade and replaced with satisfactory materials as directed. Such excavated material and the satisfactory material ordered as replacement shall be included in excavation. Surplus satisfactory excavated material not required for fill or embankment shall be disposed of in areas approved for surplus material storage or designated waste areas. Unsatisfactory excavated material shall be disposed of in designated waste or spoil areas. During construction, excavation and fill shall be performed in a manner and sequence that will provide proper drainage at all times. Material required for fill or embankment in excess of that produced by excavation within the grading limits shall be excavated from off site borrow selected by the Contractor.

3.2.1 Ditches, Gutters, and Channel Changes

Excavation of ditches, gutters, and channel changes shall be accomplished by cutting accurately to the cross sections, grades, and elevations shown. Ditches and gutters shall not be excavated below grades shown. Excessive open ditch or gutter excavation shall be backfilled with satisfactory, thoroughly compacted, material or with suitable stone or cobble to grades shown. Material excavated shall be disposed of as shown or as directed, except that in no case shall material be deposited less than 4 feet from the edge of a ditch. The Contractor shall maintain excavations free from detrimental quantities of leaves, brush, sticks, trash, and other debris until final acceptance of the work.

3.2.2 Drainage Structures

Excavations shall be made to the lines, grades, and elevations shown, or as directed. Trenches and foundation pits shall be of sufficient size to permit the placement and removal of forms for the full length and width of structure footings and foundations as shown. Rock or other hard foundation material shall be cleaned of loose debris and cut to a firm, level, stepped, or serrated surface. Loose disintegrated rock and thin strata shall be removed. When concrete or masonry is to be placed in an excavated area, the bottom of the excavation shall not be disturbed. Excavation to the final grade level shall not be made until just before the concrete or masonry is to be placed.

3.3 SELECTION OF BORROW MATERIAL

Borrow material shall be selected to meet the requirements and conditions of the particular fill or embankment for which it is to be used. Borrow material shall be obtained off site by the Contractor. The Contractor shall obtain from the owners the right to procure material, pay royalties and other charges involved, and bear the expense of developing the sources, including rights-of-way for hauling. No borrow shall be obtained within the limits of the project site without prior written approval. Necessary clearing, grubbing, and satisfactory drainage of borrow pits and the disposal of debris thereon shall be considered related operations to the borrow excavation.

3.4 OPENING AND DRAINAGE OF EXCAVATION AND BORROW PITS

Except as otherwise permitted, borrow pits and other excavation areas shall be excavated providing adequate drainage. Overburden and other spoil material shall be transported to designated spoil areas or otherwise disposed of as directed. Borrow pits shall be neatly trimmed and drained after the excavation is completed. The Contractor shall ensure that excavation of any area, operation of borrow pits, or dumping of spoil material results in minimum detrimental effects on natural environmental conditions.

3.5 BACKFILL

Backfill adjacent to any and all types of structures shall be placed and compacted to at least 90 percent laboratory maximum density for cohesive materials or 95 percent laboratory maximum density for cohesionless materials to prevent wedging action or eccentric loading upon or against the structure. Ground surface on which backfill is to be placed shall be prepared as specified in paragraph PREPARATION OF GROUND SURFACE FOR EMBANKMENTS. Compaction requirements for backfill materials shall also conform to the applicable portions of paragraphs PREPARATION OF GROUND SURFACE FOR EMBANKMENTS, EMBANKMENTS, and SUBGRADE PREPARATION, and Section 02720 STORM-DRAINAGE SYSTEM; and Section 02222 EXCAVATION, TRENCHING, AND BACKFILLING FOR UTILITIES SYSTEMS. Compaction shall be accomplished by sheepsfoot rollers, pneumatic-tired rollers, steel-wheeled rollers, vibratory compactors, or other approved equipment.

3.6 PREPARATION OF GROUND SURFACE FOR EMBANKMENTS

Ground surface on which fill is to be placed shall be stripped of live, dead, or decayed vegetation, rubbish, debris, and other unsatisfactory material; plowed, disked, or otherwise broken up to a depth of 9 inches; pulverized; moistened or aerated as necessary; thoroughly mixed; and compacted to at least 90 percent laboratory maximum density for cohesive materials or 95 percent laboratory maximum density for cohesionless materials. Compaction shall be accomplished by sheepsfoot rollers, pneumatic-tired rollers, steel-wheeled rollers, vibratory compactors, or other approved equipment. The prepared ground surface shall be scarified and moistened or aerated as required just prior to placement of embankment materials to assure adequate bond between embankment material and the prepared ground surface.

3.7 EMBANKMENTS

3.7.1 Earth Embankments

Earth embankments shall be constructed from satisfactory materials free of organic or frozen material and rocks with any dimension greater than 3 inches. The material shall be placed in successive horizontal layers of loose material not more than 9 inches in depth. Each layer shall be spread uniformly on a soil surface that has been moistened or aerated as necessary and scarified or otherwise broken up in such a manner that the fill will bond with the surface on which it is placed. After spreading, each layer shall be plowed, disked, or otherwise broken up; moistened or aerated as necessary; thoroughly mixed; and compacted to at least 90 percent laboratory maximum density for cohesive materials or 95 percent laboratory maximum density for cohesionless materials. Compaction requirements for the upper portion of earth embankments forming subgrade for pavements shall be identical with those requirements specified in paragraph SUBGRADE PREPARATION. Compaction shall be accomplished by sheepsfoot rollers, pneumatic-tired rollers, steel-wheeled rollers, vibratory compactors, or other approved equipment.

3.8 SUBGRADE PREPARATION

3.8.1 Construction

Subgrade shall be shaped to line, grade, and cross section, and compacted as specified. This operation shall include plowing, disking, and any moistening or aerating required to obtain specified compaction. Soft or otherwise unsatisfactory material shall be removed and replaced with satisfactory excavated material or other approved material as directed. Rock encountered in the cut section shall be excavated to a depth of 6 inches below finished grade for the subgrade. Low areas resulting from removal of unsatisfactory material or excavation of rock shall be brought up to required grade with satisfactory materials, and the entire subgrade shall be shaped to line, grade, and cross section and compacted as specified. After rolling, the surface of the subgrade for roadways, driveways, and parking lots shall not show deviations greater than 1 inch when tested with a 10 foot straightedge applied both parallel and at right angles to the centerline of the area. The elevation of the finish subgrade shall not vary more than 0.05 foot from the established grade and cross section.

3.8.2 Compaction

Compaction shall be accomplished by sheepsfoot rollers, pneumatic-tired rollers, steel-wheeled rollers, vibratory compactors, or other approved equipment. Each layer of the embankment shall be compacted to at least 90 percent of laboratory maximum density.

3.9 FINISHING

The surface of excavations, embankments, and subgrades shall be finished to a smooth and compact surface in accordance with the lines, grades, and cross sections or elevations shown. The degree of finish for graded areas shall be within 0.1 foot of the grades and elevations indicated except that the degree of finish for subgrades shall be specified in paragraph SUBGRADE PREPARATION. Gutters and ditches shall be finished in a manner that will result in effective drainage. The surface of areas to be turfed shall be finished to a smoothness suitable for the application of turfing materials.

3.10 TESTING

Testing shall be performed by an approved commercial testing laboratory or by the Contractor subject to approval. If the Contractor elects to establish testing facilities, no work requiring testing will be permitted until the Contractor's facilities have been inspected and approved by the Contracting Officer. The first inspection be at the expense of the Government. Cost incurred for any subsequent inspections required because of failure of the first inspection will be charged to the Contractor. Field in-place density shall be determined in accordance with ASTM D 1556 or ASTM D 2922. When ASTM D 2922 is used, the calibration curves shall be checked and adjusted using only the sand cone method as described in ASTM D 1556. ASTM D 2922 results in a wet unit weight of soil and when using this method ASTM D 3017 shall be used'to determine the moisture content of the soil. The calibration curves furnished with the moisture gauges shall also be checked along with density calibration checks as described in ASTM D 3017; the calibration checks of both the density and moisture gauges shall be made at the beginning of a job on each different type of material encountered and at intervals as directed by the Contracting Officer. Each 5th ASTM D 2922 test (nuclear) shall be checked by an ASTM D 1556 (sand cone) at the same location. Each 5th ASTM D 3017 test (nuclear) shall be checked by an ASTM D 2216 test (oven) at the same location. When test results indicate, as determined by the Contracting Officer, that compaction is not as specified, the material shall be removed, replaced and recompacted to meet specification requirements. Tests on recompacted areas shall be performed to determine conformance with specification requirements. Inspections and test results shall be certified by a registered professional civil engineer. These certifications shall state that the tests and observations were performed by or under the direct supervision of the engineer and that the results are representative of the materials or conditions being certified by the tests. The following number of tests, if performed at the appropriate time, will be the minimum acceptable for each type operation.

3.10.1 Fill and Backfill Material Gradation

One test per 1,000 cubic yards stockpiled or in-place source material. Gradation of fill and backfill material shall be determined in accordance with ASTM D 422.

3.10.2 In-Place Densities

a. One test per 2,000 square feet, or fraction thereof, of each lift of fill or backfill areas compacted by other than hand-operated machines.

b. One test per 250 square feet, or fraction thereof, of each lift of fill or backfill areas compacted by hand-operated machines.

3.10.3 Check Tests on In-Place Densities

If ASTM D 2922 is used, in-place densities shall be checked by ASTM D 1556 as follows:

a. One check test per lift for each 5,000 square feet, or fraction thereof, of each lift of fill or backfill compacted by other than hand-operated machines.

b. One check test per lift for each 1,000 square feet, of fill or backfill areas compacted by hand-operated machines.

3.10.4 Moisture Contents

In the stockpile, excavation, or borrow areas, a minimum of two tests per day per type of material or source of material being placed during stable weather conditions shall be performed. During unstable weather, tests shall be made as dictated by local conditions and approved by the Contracting Officer.

3.10.5 Optimum Moisture and Laboratory Maximum Density

Tests shall be made for each type material or source of material including borrow material to determine the optimum moisture and laboratory maximum density values. One representative test for each type of material used for fill and backfill, or when any change in material occurs which may affect the optimum moisture content or laboratory maximum density.

3.10.6 Tolerance Tests for Subgrades

Continuous checks on the degree of finish specified in paragraph SUBGRADE PREPARATION shall be made during construction of the subgrades.

3.11 SUBGRADE AND EMBANKMENT PROTECTION

During construction, embankments and excavations shall be kept shaped and drained. Ditches and drains along subgrade shall be maintained to drain effectively at all times. The finished subgrade shall not be disturbed by traffic or other operation and shall be protected and maintained by the Contractor in a satisfactory condition until base, or pavement is placed. The storage or stockpiling of materials on the finished subgrade will not be permitted. No base course or pavement shall be laid until the subgrade has been checked and approved, and in no case shall base, surfacing, or pavement be placed on a muddy, spongy, or frozen subgrade.

-- End of Section --

SECTION 02230

CLEARING AND GRUBBING

PART 1 GENERAL

1.1 DEFINITIONS

1.1.1 Clearing

Clearing shall consist of the felling, trimming, and cutting of trees into sections and the satisfactory disposal of the trees and other vegetation designated for removal, including down timber, snags, brush, and rubbish occurring in the areas to be cleared.

1.1.2 Grubbing

Grubbing shall consist of the removal and disposal of stumps, roots larger than 3 inches in diameter, and matted roots from the designated grubbing areas.

PART 2 PRODUCTS (Not Applicable)

PART 3 EXECUTION

3.1 CLEARING

Trees, stumps, roots, brush, and other vegetation in areas to be cleared shall be cut off flush with or below the original ground surface. Trees and vegetation to be left standing shall be protected from damage incident to clearing, grubbing, and construction operations by the erection of barriers or by such other means as the circumstances require.

3.2 GRUBBING

Material to be grubbed, together with logs and other organic or metallic debris not suitable for foundation purposes, shall be removed to a depth of not less than 18 inches below the original surface level of the ground in areas indicated to be grubbed and in areas indicated as construction areas under this contract, such as areas for buildings, and areas to be paved. Depressions made by grubbing shall be filled with suitable material and compacted to make the surface conform with the original adjacent surface of the ground.

3.3 TREE REMOVAL

Trees and stumps that are under the building or paved areas shall be removed.

3.4 DISPOSAL OF MATERIALS

Logs, stumps, roots, brush, rotten wood, and other refuse from the clearing and grubbing operations shall be disposed of in the designated waste disposal area, except when otherwise directed in writing. Such directive will state the conditions covering the disposal of such products and will also state the areas in which they may be placed.

-- End of Section --

SECTION 02231

STONE PROTECTION

PART 1 GENERAL

1.1 SUMMARY

This section covers quarry run stone protection.

1.2 REFERENCES

The following publications of the issues listed below, but referred to thereafter by basic designation only, form a part of this specification to the extent indicated by the references thereto:

AMERICAN SOCIETY FOR TESTING AND MATERIALS (ASTM) PUBLICATIONS

ASTM C 88	(1990) Soundness of Aggregates by Use of Sodium Sulfate or Magnesium Sulfate.
ASTM C 127	(1988) Specific Gravity and Absorption of Coarse Aggregate.
ASTM C 535	(1989) Resistance to Abrasion of Large Size Coarse Aggregate by Use of the Los Angeles Machine.

PART 2 PRODUCTS

2.1 MATERIAL

2.1.1 General

Stone for protection work shall be durable stone as approved by the Contracting Officer. Gypsum, anhydrite, chert, shale, and soft or weathered rock will not be approved. The sources from which the Contractor proposes to obtain the material shall be selected well in advance of the time when the material will be required in the work. Selected stone from the required excavation may be used if satisfying all requirements as to quality and dimensions. Suitable test samples of stone protection material shall be obtained by the Contractor under the direct supervision of the Contracting Officer, and shall be delivered to a point at the project site designated by the Contracting Officer. All costs of delivery of test samples will be at the expense of the Contractor. Test samples shall be submitted at least 60 days in advance of the time when the placing of the stone protection is expected to begin. Stone protection material shall not be delivered to the site of the work prior to approval of the test samples. The total overall weight of the sample of material proposed for quarry-run stone shall approximate 1,000 pounds aud representative pieces shall weigh not more than 100 pounds. If the protection stone is obtained from more than one source, samples of the proposed stone shall be submitted from each source. The submission of samples will not be required if the material is obtained from a source approved by the Government from suitable tests and service records.

2.1.2 Quality

Suitable tests and service records will be used to determine the acceptability of the stone protection materials. If suitable test reports and a service record that are satisfactory to the Contracting Officer are not available, as in the case of newly operated sources, the material shall be subjected to such tests as are necessary to determine its acceptability for use in the work. Tests to which the materials may be subjected include petrographic analysis, specific gravity, abrasion, absorption, wetting and drying, freezing and thawing, and such other tests as may be considered necessary to demonstrate to the satisfaction of the Contracting Officer that the materials are acceptable for use in the work. All tests shall be made by the Contractor. Tests and test values listed below are for job controls of quarry-run stone material being produced. Stone shall be durable and of a suitable quality to insure permanence in the structure and in the climate in which it is to be used. It shall be free from cracks, seams, and other defects that would tend to increase unduly its deterioration from natural causes. The inclusion of objectionable quantities of dust, sand, clay, and rock dust will not be permitted.

2.1.2.1 Weight, Specific Gravity, and Absorption

The minimum weight per solid cubic foot calculated from the bulk specific gravity (saturated surface-dry) of the sample determined in accordance with the procedure in ASTM Specification C127 shall be 156 pounds. Bulk specific gravity shall be not less than 2.50, and maximum absorption shall not exceed 6 percent as determined in accordance with the procedures specified in ASTM C127.

2.1.2.2 Soundness (Magnesium Sulfate Test)

The loss of weight of stone after testing with five cycles of magnesium sulfate shall not exceed 35 percent. The tests will be in accordance with the procedures designated in ASTM C 88. The tests will be performed on 1-1/2 to 2-1/2-inch size aggregate.

2.1.2.3 Resistance to Abrasions

Stone will be subjected to Los Angeles Abrasion Test (ASTM Designation C535) and shall show a loss in weight of not more than 45 percent after 500 revolutions.

2.2 GRADATION

Stone shall be free from overburden spoil, except dirt and fines accumulated from interledge layers or from blasting or loading operations up to 8 percent by weight of total sample tested passing the -inch square mesh sieve will be accepted.

RIPRAP GRADATION

Thickness (inches)	Maximum Weight (pounds)	Ave. Size (pounds)	Not More Than 20% Less Than (pounds)
12	150	30-50	20

PART 3 EXECUTION

3.1 FOUNDATION PREPARATION

Areas on which stone is to be placed shall be trimmed and dressed to conform to cross sections shown on the drawings within an allowable to tolerance of plus or minus 2 inches from the theoretical slope lines and grades. Where such areas are below the allowable minus tolerance limit, they shall be brought to grade by filling with earth similar to the adjacent material and well compacted and no additional payment will be made for any material thus required. Immediately prior to placing the stone layer, the prepared base will be inspected by the Contracting Officer and no material shall be placed thereon until that area has been approved.

3.2 PLACEMENT

The Contractor shall provide and set grade stakes at intervals not to exceed 25 foot centers longitudinally, and at points of grade change. Placement shall produce a well keyed and stable mass of rocks with a finished surface corresponding to the lines and grades shown. These requirements include: Placement of stone to a full layer thickness in one operation in a manner to minimize segregation and avoid displacement of underlying materials.

Placement by means of a truck, clam, rock bucket, orange peel, or hydraulic excavator (Gradall) will be supplemented by hand placement to obtain a suitable product. All methods of placement shall be approved by the Contracting Officer and approval will be contingent on the Contractor's continued ability to provide an acceptable product. Stone shall be placed up the slope from the toe.

The Contractor shall provide for rearrangement loose stones and "chinking" of void spaces or hand placement as required for a stable mass.

The in place stone shall conform to the gradation specified.

Placement procedures that will not be permitted include: heavy or tracked equipment on the stone surface; dumping of stone at a higher elevation than the placement area and rolling into place; moving stone by drifting and manipulating by means of dozer, dragline bucket or other blade equipment; and final finishing of the stone with heavy plates or similar methods which would result in breakdown of the in place stone.

3.3 SAMPLING AND TESTING

During construction, materials shall be sampled and tested by the Contractor as required to indicate conformance of the specified requirements.

--End of Section--

SECTION 02241

AGGREGATE BASE COURSE

PART 1 GENERAL

1.1 REFERENCES

The publications listed below form a part of this specification to the extent referenced. The publications are referred to in the text by basic designation only.

AMERICAN SOCIETY FOR TESTING AND MATERIALS (ASTM)

ASTM C 29	(1991a) Unit Weight and Voids in Aggregate
ASTM C 127	(1988) Specific Gravity and Absorption of Course Aggregate
ASTM C 128	(1988) Specific Gravity and Absorption of Fine Aggregate
ASTM C 131	(1989) Resistance to Degradation of Small-Size Coarse Aggregate by Abrasion and Impact in the Los Angeles Machine
ASTM C 136	(1984a) Sieve Analysis of Fine and Coarse Aggregates
ASTM D 75	(1987) Sampling Aggregates
ASTM D 422	(1963; R 1990) Particle-Size Analysis of Soils
ASTM D 1556	(1990) Density and Unit Weight of Soil in Place by the Sand-Cone Method
ASTM D 1557	(1991) Laboratory Compaction Characteristics of Soil Using Modified Effort (56,000 ft-1bf/cu. ft. (2,700 kN-m/cu. m.))
ASTM D 2167	(1984; R 1990) Density and Unit Weight of Soil in Place by the Rubber Balloon Method
ASTM D 2922	(1991) Density of Soil and Soil-Aggregate in Place by Nuclear Methods (Shallow Depth)
ASTM D 2216	(1992) Laboratory Determination of Water (Moisture) Content of Soil and Rock
ASTM D 4253	(1991) Maximum Index Density and Unit Weight of Soils Using a Vibratory Table
ASTM D 4318	(1984) Liquid Limit, Plastic Limit, and Plasticity Index of Soils
ASTM D 4643	(1987) Determination of Water (Moisture) Content of Soil by the Microwave Oven Method
ASTM E 11	(1987) Wire-Cloth Sieves for Testing Purposes

1.2 DEFINITIONS

1.2.1 Aggregate Base

Aggregate base as used herein is well graded, durable aggregate uniformly moistened and mechanically stabilized by compaction.

1.2.2 Degree of Compaction

Degree of compaction is a percentage of the maximum laboratory dry density obtained by the test procedure presented in ASTM D 1557 or ASTM D 4253. ASTM D 1557 shall be used for soils containing 15 percent or more passing the no. 200 sieve (fines). ASTM D 4253 shall be used for soils containing 5 percent or less fines. The maximum laboratory dry density for soils containing between 5 and 15 percent fines shall be determined by the above procedure yielding the highest laboratory dry density. The percentage of material passing the no. 200 sieve shall be determined in accordance with ASTM D 4253. Degree of compaction shall be expressed as a percentage of the maximum laboratory dry density obtained by the appropriate procedure as defined above. Percentage of maximum laboratory dry density has been abbreviated hereinafter as percent laboratory maximum density.

1.3 GENERAL

The work specified herein consists of the construction of an aggregate base course. The work shall be performed in accordance with this specification and shall conform to the lines, grades, notes and typical sections shown in the plans. Sources of all materials shall be selected well in advance of the time that materials will be required in the work.

1.4 SUBMITTALS

Government approval is required for submittals with a "GA" designation; submittals having an "FIO" designation are for information only. The following shall be submitted in accordance with Section 01300 SUBMITTAL DESCRIPTIONS:

SD-01 Data

Plant, Equipment, Machines, and Tools; FIO.

List of proposed equipment to be used in performance of construction work including descriptive data.

SD-09 Reports

Sampling and Testing; FIO. Field Density; FIO.

Calibration curves and related test results prior to using the device or equipment being calibrated. Copies of field test results within 24 hours after the tests are performed. Certified copies of test results for approval not less than 30 days before material is required for the work.

SD-18 Records

Coarse Aggregate; FIO.

A notification stating which type of coarse aggregate is to be used.

1.5 WEATHER LIMITATIONS

Base shall not be constructed when the atmospheric temperature is less than 35 degrees F. Base shall not be constructed on subgrades that are frozen or contain frost. If the temperature falls below 35 degrees F, completed areas shall be protected against any detrimental effects of freezing.

1.6 PLANT, EQUIPMENT, MACHINES, AND TOOLS

1.6.1 General Requirements

Plant, equipment, machines, and tools used in the work shall be subject to approval and shall be maintained in satisfactory working condition at all times. Other compacting equipment may be used in lieu of that specified, where it can be demonstrated that the results are equivalent. The equipment shall be adequate and have the capability of producing the results specified.

1.6.2 Steel-Wheeled Rollers

Steel-wheeled rollers shall be the self-propelled type weighing not less than 10 tons, with a minimum weight of 300 pounds per inch width of rear wheel. Wheels of the rollers shall be equipped with adjustable scrapers. The use of vibratory rollers is optional.

1.6.3 Pneumatic-Tired Rollers

Pneumatic-tired rollers shall have four or more tires, each loaded to a minimum of 20,000 pounds and inflated to a minimum pressure of 150 psi. The loading shall be equally distributed to all wheels, and the tires shall be uniformly inflated. Towing equipment shall also be pneumatic-tired.

1.6.4 Mechanical Spreader

Mechanical spreader shall be self-propelled or attached to a propelling unit capable of moving the spreader and material truck. The device shall be steerable and shall have variable speeds forward and reverse. The spreader and propelling unit shall be carried on tracks, rubber tires, or drum-type steel rollers that will not disturb the underlying material. The spreader shall contain a hopper, an adjustable screed, and outboard bumper rolls and be designed to have a uniform, steady flow of material from the hopper. The spreader shall be capable of laying material without segregation across the full width of the lane to a uniform thickness and to a uniform loose density so that when compacted, the layer or layers shall conform to thickness and grade requirements indicated. The Contracting Officer may require a demonstration of the spreader prior to approving use in performance of the work.

1.6.5 Sprinkling Equipment

Sprinkling equipment shall consist of tank trucks, pressure distributors, or other approved equipment designed to apply controlled quantities of water uniformly over variable widths of surface.

1.6.6 Tampers

Tampers shall be of an approved mechanical type, operated by either pneumatic pressure or internal combustion, and shall have sufficient weight and striking power to produce the compaction required.

1.6.7 Straightedge

The Contractor shall furnish and maintain at the site, in good condition, one 10-foot straightedge for each bituminous paver, for use in the testing of the finished surface. Straightedge shall be made available for Government use. Straightedges shall be constructed of aluminum or other lightweight metal and shall have blades of box or box-girder cross section with flat bottom reinforced to insure rigidity and accuracy. Straightedges shall have handles to facilitate movement on pavement.

1.7 STOCKPILING MATERIALS

Materials, including approved material available from excavation and grading, shall be stockpiled in the manner and at locations designated. Before stockpiling of material, storage sites shall be cleared, and sloped to drain. Materials obtained from different sources shall be stockpiled separately.

1.8 SAMPLING AND TESTING

1.8.1 General Requirements

Sampling and testing shall be performed by an approved commercial testing laboratory or by facilities furnished by the Contractor. No work requiring testing shall be permitted until the facilities have been inspected and approved. The first inspection shall be at the expense of the Government. Cost incurred for any subsequent inspection required because of failure of the facilities to pass the first inspection will be charged to the Contractor. Tests shall be performed in sufficient numbers and at the locations and times directed to insure that materials and compaction meet specified requirements. Copies of test results shall be furnished to the Contracting Officer within 24 hours of completion of tests.

1.8.2 Test Results

Results shall verify that materials comply with this specification. When a material source is changed, the new material will be tested for compliance. When deficiencies are found, the initial analysis shall be repeated and the material already placed shall be retested to determine the extent of unacceptable material. All in-place unacceptable material shall be replaced or modified as directed by the Contracting Officer.

1.8.3 Sampling

Aggregate samples for laboratory tests shall be taken in accordance with ASTM D 75.

1.8.4 Sieve Analysis

Before starting work, at least one sample of material shall be tested in accordance with ASTM C 136 and ASTM D 422 on sieves conforming to ASTM E 11. After the initial test, a minimum of one analysis shall be performed for each 1000 tons of material placed, with a minimum of one analysis for each day's run until the course is completed.

1.8.5 Liquid Limit and Plasticity Index

One liquid limit and plasticity index shall be performed for each sieve analysis. Liquid limit and plasticity index shall be in accordance with ASTM D 4318. A minimum of one liquid limit and plastic limit test shall be run each day.

1.8.6 Laboratory Density

Tests shall provide a moisture-density relationship for the aggregate. Tests shall be conducted in accordance with ASTM D 1557, Method D.

1.8.7 Weight Per Cubic Foot of Slag

Weight per cubic foot of slag shall be determined in accordance with ASTM C 29.

1.8.8 Wear Tests

Wear tests shall be performed in accordance with ASTM C 131. A minimum of one test per aggregate source shall be run.

1.8.9 Optimum Moisture and Laboratory Maximum Dry Density

The laboratory maximum dry density shall be determined from materials obtained at a sand cone test location using the appropriate procedure specified in Part 1 above. When ASTM D 1557 is used, the optimum moisture content shall be determined. A minimum of one laboratory maximum dry density test shall be run each placement day or fraction thereof. Additional laboratory maximum dry density tests shall be run for each material change.

PART 2 PRODUCTS

2.1 MATERIALS

2.1.1 Aggregates

Aggregates shall consist of crushed stone or slag, crushed gravel, angular sand, or other approved material. Aggregates shall be durable and sound, free from lumps of clay, organic matter, objectionable coatings, and other foreign material. Material retained on a No. 4 sieve shall be known as coarse aggregate and that passing the No. 4 sieve shall be known as binder material.

2.1.1.1 Coarse Aggregate

Only one type of coarse aggregate shall be used on the project. Coarse aggregates, consisting of angular fragments of uniform density and quality, shall have a percentage of wear not to exceed 50 percent after 500 revolutions when tested in accordance with ASTM C 131. The amount of flat and elongated particles shall not exceed 30 percent. A flat particle is one having a ratio of width to thickness greater than 3, and an elongated particle is one having a ratio of length to width greater than 3.

a. Crushed Gravel: Crushed gravel shall be manufactured from gravel particles 50 percent of which by weight are retained on the maximum size gradation sieve specified.

b. Crushed Stone: Crushed stone retained on each sieve specified shall contain at least 50 percent by weight of crushed pieces having two or more freshly fractured faces with the area of each face being at least equal to 75 percent of the smallest midsectional area of the piece. When two fractures are adjacent, the angle between the planes of the fractures must be at least 30 degrees to count as two fractured faces.

2.1.1.2 Slag

Slag shall be an air-cooled blast-furnace product having a dry unit weight of not less than 65 pcf.

2.1.2 Binder Material

Binder material shall consist of screenings, angular sand, or other finely divided mineral matter processed or naturally combined with the coarse aggregate. Liquid-limit and plasticity-index requirements shall apply to any component that is blended to meet the required gradation and shall also apply to the completed course. The portion of any component or of the completed course passing the No. 40 sieve shall be either nonplastic or have a liquid limit not greater than 25 and a plasticity index not greater than 5.

2.1.3 Gradation

Sieve Designation	Percentage by Weight Passing Square-mesh Sieve (a) (b)
2-inch	
1-1/2-inch	100
1-inch	60-100
1/2-inch	30-65
No. 4	20-50
No. 10	15-40
No. 40	5-25
No. 200	0-8

(a) Particles having diameters less than 0.02 millimeter shall not be in excess of 3 percent by weight of the total sample tested.

(b) The values are based on aggregates of uniform specific gravity, and the percentages passing the various sieves are subject to appropriate correction in accordance with ASTM C 127 and ASTM C 128 when aggregates of varying specific gravities are used.

PART 3 EXECUTION

3.1 GENERAL REQUIREMENTS

Adequate drainage shall be provided during the entire period of construction to prevent water from collecting or standing on the working area. Line and grade stakes shall be provided as necessary for control. Grade stakes shall be in lines parallel to the centerline of the area under construction and suitably spaced for string lining.

3.2 OPERATION OF AGGREGATE SOURCES

Aggregates shall be obtained from off-site sources.

3.3 PREPARATION OF UNDERLYING COURSE

3.3.1 General Requirements

Before constructing aggregate base course, the previously constructed underlying course shall be cleaned of foreign substances. Surface of underlying course shall meet the specified compaction and surface tolerances. Subgrade shall conform to Section 02245 FLY ASH MODIFIED SUBGRADE. Ruts or soft, yielding spots that may appear in the underlying course, areas having inadequate compaction, and deviations of the surface from requirements specified shall be corrected. For cohesionless underlying materials containing sands, sand gravels, or any other cohesionless material in harmful quantities, the surface shall be mechanically stabilized with aggregate prior to placement of the aggregate course. Stabilization may be accomplished by mixing base course material into the underlying course and compacting by approved methods. Properly compacted material will be considered as part of the underlying course and shall meet all requirements for the underlying course. Finished underlying course shall not be disturbed by traffic or other operations and shall be maintained in a satisfactory condition until base course is placed.

3.3.2 Grade Control

Underlying material shall be excavated to sufficient depth for the required base course thickness so that the finished base course with the subsequent surface course will meet the fixed grade. Finished and completed area shall conform to the lines, grades, cross section, and dimensions indicated.

3.4 INSTALLATION

3.4.1 Mixing and Placing

Materials shall be mixed by the stationary plant, traveling plant, or road mix method and placed in such a manner as to obtain uniformity of the aggregate base course material and at a uniform optimum water content for compaction. The Contractor shall make such adjustments in mixing or placing procedures or in equipment to obtain the true grades, to minimize segregation and degradation, to reduce or accelerate loss or increase of water, and to ensure a satisfactory base course.

3.4.2 Edges of Base Course

Approved material shall be placed along edges of aggregate base course in such quantities as will compact to thickness of the course being constructed.

3.4.3 Compaction

Water content shall be maintained at optimum. Density of compacted mixture shall be at least 100 percent of laboratory maximum density. Rolling shall begin at the outside edge of the surface and proceed to the center, overlapping on successive trips at least one-half the width of the roller. Alternate trips of the roller shall be slightly different lengths. Speed of the roller shall be such that displacement of the aggregate does not occur. Areas inaccessible to the rollers shall be compacted with mechanical tampers, and shall be shaped and finished by hand methods.

3.4.4 Layer Thickness

Compacted thickness of the aggregate course shall be 6 inches.

3.4.5 Finishing

The surface shall be finished to grade and cross section shown. Finished surface shall be of uniform texture. Light blading during compaction may be necessary for the finished surface to conform to the lines, grades, and cross sections. Should the surface for any reason become rough, corrugated, uneven in texture, or traffic marked prior to completion, such unsatisfactory portion shall be scarified, reworked, recompacted, or replaced as directed.

3.4.5.1 Smoothness

The surface shall show no deviations in excess of 3/8 inch when tested with the 10-foot straightedge. Deviations exceeding this amount shall be corrected by removing material and replacing with new material, or by reworking existing material and compacting, as directed.

3.4.5.2 Thickness Control

Compacted thickness of the base course shall be within l/4 inch of the thickness indicated. Where the measured thickness is more than l/4 inch deficient, such areas shall be corrected by scarifying, adding new material of proper gradation, reblading, and recompacting as directed. Where the measured thickness is more than l/2 inch thicker than indicated, the course shall be considered as conforming to the specified thickness requirements. Average job thickness shall be the average of all thickness measurements taken for the job, but shall be within l/4 inch of the thickness indicated.

3.5 FIELD QUALITY CONTROL

3.5.1 Field Density

A sufficient quantity of material shall be obtained from the sand cone test location to determine the maximum laboratory dry density, gradation, liquid limit, and plastic limit. A gradation test shall be run on the sample prior to determining the maximum laboratory dry density. A portion of the sampled material passing the no. 40 sieve shall be tested to determine the liquid limit and plasticity index. Additional tests shall be run for each material change.

3.5.1 Field Density and Moisture Content

Field in-place density shall be determined in accordance with ASTM D 1556- or ASTM D 2922. If ASTM D 2922 is used, in-place densities shall be checked by ASTM D 1556 at least once per each 8 nuclear density tests and at least once per each lift placed. The sand cone test shall be performed adjacent to the location where a nuclear density test was taken to ensure a proper correlation is established between the two methods. Moisture contents shall be determined in accordance with ASTM D 4643 or ASTM D 2216. If ASTM D 4643 is used, moisture contents shall be checked by ASTM D 2216 once per each ten microwave tests. The laboratory tests specified in paragraph 1.10 shall be run on materials obtained from a sand cone test sample location. At least one field density and one moisture content test shall be performed for each 200 square yards of stabilized aggregate base material placed.

3.5.2 Smoothness

Measurements for deviation from grade and cross section shown shall be taken in successive positions parallel and perpendicular to the P. C. concrete pavement joint pattern with a 10 foot straightedge.

3.5.3 Thickness

Thickness of the base course shall be measured at intervals in such a manner as to ensure one measurement for each 250 square yards of base course. Measurements shall be made in 3 inch diameter test holes penetrating the base course.

3.6 TRAFFIC

Completed portions of the area may be opened to traffic, provided there is no marring or distorting of the surface by the traffic. Heavy equipment shall not be permitted except when necessary to construction, and then the area shall be protected against marring or damage to the completed work.

3.7 MAINTENANCE

The aggregate base course shall be maintained in a satisfactory condition until accepted. Maintenance shall include immediate repairs to any defects and shall be repeated as often as necessary to keep the area intact.

3.8 DISPOSAL OF UNSATISFACTORY MATERIALS

Removed in-place materials that are unsuitable for the base course material that is removed for the required correction of defective areas, and waste material and debris shall be disposed of in waste disposal areas indicated.

-- End of Section --

SECTION 02245

FLY ASH MODIFIED SUBGRADE

PART 1 GENERAL

1.1 REFERENCES

The publications listed below form a part of this specification to the extent referenced. The publications are referred to in the text by basic designation only.

AMERICAN SOCIETY FOR TESTING AND MATERIALS (ASTM)

ASTM C 50	(1986; R 1991) Sampling, Inspection, Packing, and Marking of Lime and Limestone Products
ASTM C 311	(1996a) Sampling and Testing Fly Ash or Natural Pozzolans for Use as a Mineral Admixture in Portland-Cement Concrete
ASTM C 618	(1991) Fly Ash and Raw or Calcined Natural Pozzolan for Use as a Mineral Admixture in Portland Cement Concrete
ASTM D 977	(1986) Emulsified Asphalt
ASTM D 1556	(1990) Density of Soil In-Place by the Sand-Cone Method
ASTM D 1557	(1978; R 1990) Moisture-Density Relations of Soils and Soil-Aggregate Mixtures Using 10-Lb. (4.54-kg) Rammer and 18-In. (457-mm) Drop
ASTM D 1633	(1984; R 1990) Compressive Strength of Molded Soil-Cement Cylinders
ASTM D 2922	(1981; R 1990) Density of Soil and Soil-Aggregate In-Place by Nuclear Methods (Shallow Depth)
ASTM D 2216	(1992) Laboratory Determination of Water (Moisture) Content of Soil and Rock
ASTM D 4643	(1987) Determination of Water (Moisture) Content of Soil by the Microwave Oven Method
ASTM E 548	(1991) Evaluating Laboratory Competence

1.2 DEFINITIONS

1.2.1 Fly Ash-Stabilized Subgrade

Fly Ash modified subgrade, as used herein, is a mixture of fly ash and in-place or select borrow material uniformly blended, wetted, and thoroughly compacted to produce a pavement course which meets all criteria as set forth in the plans and this specification.

1.2.2 Degree of Compaction

Degree of compaction required is expressed as a percentage of the maximum density obtained by the test procedure presented in ASTM D 1557 Method D, abbreviated hereinafter as percent laboratory maximum density.

1.3 GENERAL

The work specified herein consists of the construction of a fly ash stabilized subgrade course. The work shall be performed in accordance with this specification and shall conform to the lines, grades, notes, and typical sections shown in the plans.

1.4 SUBMITTALS

Government approval is required for submittals with a "GA" designation; submittals with a "FIO" designation are for information only. The following shall be submitted in accordance with Section 01300 SUBMITTAL DESCRIPTIONS:

SD-09, Reports

Test Reports, FIO

Results of laboratory tests for quality control purposes shall be submitted to the Contracting Officer and approved prior to using the material.

Copies of field tests results shall be submitted within 24 hours after the tests are performed.

Calibration curves and related test results shall be submitted prior to using the device or equipment being calibrated.

Certified copies of manufacturer's test results indicating compliance of bituminous material with applicable specified requirements shall be submitted to the Contracting Officer not less than 30 days before the material is required in the work.

Sources of all materials shall be selected well in advance of the time that materials will be required in the work. Test results from samples shall be submitted for approval not less than 30 days before material is required for the work.

Unconfined compression tests shall be conducted in accordance with ASTM D 1633. Three tests shall be conducted for each mix design tested. Samples shall be cured at a constant moisture content and temperature for 28 days.

1.5 STOCKPILING MATERIALS

Select material, including approved material available from excavation and grading, shall be stockpiled in the manner and at the locations designated. Before stockpiling material, storage sites shall be cleared and sloped to drain. Materials obtained from different sources shall be stockpiled separately.

1.6 PLANT, EQUIPMENT, MACHINES, AND TOOLS

1.6.1 General Requirements

Plant, equipment, machines, and tools used in the work shall be subject to approval and shall be maintained in satisfactory working condition at all times. Other compacting equipment may be used in lieu of that specified, where it can be demonstrated that the results are equivalent. The equipment shall be adequate and have the capability of producing the results specified. Protective equipment, apparel, and barriers shall be provided to protect the eyes, respiratory system, and the skin of workers exposed to contact with fly ash dust or slurry.

1.6.2 Steel-Wheeled Rollers

Steel-wheeled rollers shall be the self-propelled type weighing not less than 10 tons, with a minimum weight of 300 pounds per inch-width of rear wheel. Wheels of the rollers shall be equipped with adjustable scrapers. The use of vibratory rollers is optional.

1.6.3 Pneumatic-Tired Rollers

Pneumatic-tired rollers shall have four or more tires, each loaded to a minimum of 20,000 pounds and inflated to a minimum pressure of 90 psi. The loading shall be equally distributed to all wheels, and the tires shall be uniformly inflated. Towing equipment shall also be pneumatic-tired.

1.6.4 Mechanical Spreader

Mechanical spreader shall be self-propelled or attached to a propelling unit capable of moving the spreader and material truck. The device shall be steerable and shall have variable speeds forward and reverse. The spreader and propelling unit shall be carried on tracks, rubber tires, or drum-type steel rollers that will not disturb the underlying material. The spreader shall contain a hopper, an adjustable screed, and outboard bumper rolls and be designed to have a uniform, steady flow of material from the hopper. The spreader shall be capable of laying material without segregation across the full width of the lane to a uniform thickness and to a uniform loose density so that when compacted, the layer or layers shall conform to thickness and grade requirements indicated. The Contracting Officer may require a demonstration of the spreader prior to approving use in performance of the work.

1.6.5 Sprinkling Equipment

Sprinkling equipment shall consist of tank trucks, pressure distributors, or other approved equipment designed to apply controlled quantities of water uniformly over variable widths of surface.

1.6.6 Tampers

Tampers shall be of an approved mechanical type, operated by either pneumatic pressure or internal combustion, and shall have sufficient weight and striking power to produce the compaction required.

1.6.7 Straightedge

The Contractor shall furnish and maintain at the site, in good condition, one 10-foot straightedge, for use in the testing of the finished surface. Straightedge shall be made available for Government use. Straightedges shall be constructed of aluminum or other lightweight metal and shall have blades of box or box-girder cross section with flat bottom reinforced to insure rigidity and accuracy. Straightedges shall have handles to facilitate movement on pavement.

1.7 RATES OF MATERIALS APPLICATIONS:

The rate of application of fly ash for the soil-fly ash mixture shall be at least 16 percent by dry weight of the nontreated soil. Bituminous material for curing shall be uniformly applied at the rate of 0.1 to 0.4 gallon per square yard. The exact bituminous material quantities, which may be varied to suit field conditions, will be determined by the Contracting Officer.

1.8 WEATHER LIMITATIONS:

Fly ash shall not be applied when the atmospheric temperature is less than 40 degrees F in the shade. No fly ash shall be applied to soils that are frozen or contain frost. If the temperature falls below 35 degrees F, completed fly ash-treated areas shall be protected against any detrimental effects of freezing. The Contractor shall be responsible for the protection and quality of the fly ash modified subgrade mixture under any weather conditions.

PART 2 PRODUCTS

2.1 MATERIALS:

2.1.1 Fly Ash

Fly ash shall conform to ASTM C 618 Class C. The product of only one plant shall be used on the project, unless otherwise approved by the Contracting Officer.

Sulphate content shall not exceed 10 percent.

2.1.2 Bituminous Material

Material shall be emulsified asphalt ASTM D 977, Type RS-1 or RS-2.

Emulsified asphalt shall be diluted with 50 percent water prior to application.

2.1.3 Material to be Modified:

Material shall be free of deleterious substances such as sticks, debris, organic matter, and stones greater than 3 inches in any dimension.

2.1.4 Water

Water shall be potable.

PART 3 EXECUTION

3.1 CONSTRUCTION

3.1.1 Preparation:

All roads and pavement areas to be fly ash modified shall be prepared to approximate subgrade elevations in accordance with Section 02225 EARTHWORK FOR ROADWAYS, RAILROADS, AND AIRFIELDS. Adequate drainage shall be provided during the entire construction period to prevent water from collecting or standing on the area or on pulverized, mixed, or partially mixed material. Line and grade stakes shall be provided as necessary for control. The area shall be cleaned of debris. The area shall be capable of the compaction specified for the soil-fly ash mixture. Debris and removed unsatisfactory in-place material shall be disposed of as specified. The entire area shall be graded to approximately conform to the lines, grades, and cross sections shown. Soft or yielding subgrade areas shall be made stable before construction is begun.

3.1.2 Scarifying and Pulverizing of Soil

Prior to application of fly ash, the in place soil shall be scarified and pulverized as necessary with no stones or lumps larger than 2-1/2 inches in any dimension to a sufficient width and depth to obtain a uniform mixture of soil, fly ash, and water and to form a compacted subgrade conforming to the cross section indicated. Scarification shall be carefully controlled so that the layer beneath the layer to be treated is not disturbed.

3.1.3 Application of Fly Ash

Work areas for shall not exceed that in which the fly ash can be applied, mixed, and compacted in one work day. Pulverized material shall be shaped to approximately the cross section indicated. Fly ash shall be applied at the specified rate. Fly ash shall not be applied by the slurry method. Mechanical spreaders shall be used in applying bulk fly ash. Equipment used for spreading fly ash shall be approved type which will distribute the fly ash at controlled uniform rates. No equipment except that used in spreading and mixing shall pass over the freshly applied fly ash.

3.1.4 Initial Mixing

Mixing of the fly ash with the subgrade soil shall follow application and spreading as a continuous construction operation. Immediately after the fly ash has been distributed, the fly ash and soil shall be mixed. The addition of water during the first mixing will not be permitted. The moisture content of the subgrade soil shall not exceed 80 percent of optimum. The soil and fly ash shall be mixed until a uniform mixture is obtained in which all clods and non-aggregate lumps are reduced to a maximum of 2.5 inch diameter size.

3.1.5 Water Application and Final Mixing

Moisture content of the mixture shall be determined prior to final mixing and water shall be added as required. Moisture in the mixture following final mixing shall be between optimum and 3

percent below optimum. Water shall be incrementally incorporated and simultaneously intermixed into the soil. After the last portion of water has been added, mixing shall be continued until the water is uniformly distributed throughout the full depth of the mixture. Particular care shall be taken to ensure satisfactory moisture distribution along the edges of the section.

3.1.6 Compaction

Before compaction operations are started and as a continuation of the mixing operation, the mixture shall be thoroughly loosened and pulverized to the full depth. The soil fly ash mixture shall be reduced in size to meet the following requirements when tested dry by laboratory sieves: Min. passing 1-1/2 inch - 100 percent; Min. passing 3/4 inch - 50 percent. Compaction shall be started immediately after mixing is completed. During final compaction, the surface shall be moistened, if necessary, and shaped to the required lines, grades, and cross section. Density of compacted mixture shall be at least 95 percent of maximum density. Rolling shall begin at the outside edge of the surface and proceed to the center, overlapping on successive trips at least one-half the width of the roller. Alternate trips of the roller shall be slightly different lengths. The speed of the roller at all times shall be such that displacement of the mixture does not occur. Areas inaccessible to the rollers shall be compacted with mechanical tampers, and shall be shaped and finished by hand methods. Final compacted thickness of the subgrade shall be 8 inches. Subgrade shall be constructed in one layer. Compaction shall be completed within 60 minutes from the time water is added.

3.1.7 Edges

Approved material shall be placed along the edges of the course in such quantity as will compact to the thickness of the course being constructed, allowing at least a 1-foot width of the shoulder to be rolled and compacted simultaneously with the rolling and compacting of the subgrade.

3.1.8 Finishing

After the fly ash modified subgrade has been compacted, it shall be brought within reasonable compliance to the lines, grades and typical sections. The completed section shall then be finished with a suitable roller sufficiently light to prevent hair cracking. The surface shall be of uniform texture. Should the surface for any reason become rough, corrugated, uneven in texture, or traffic-marked prior to completion, such unsatisfactory portions shall be scarified, reworked, relaid, or replaced as directed. Should any portion of the course, when laid, become watersoaked for any reason, that portion shall be removed immediately, and the mix placed in a windrow and aerated until a moisture content within the limits specified is obtained, and then spread, shaped, and rolled as specified above. Additional fly ash shall be added if required by the testing laboratory or the Contracting Officer.

3.1.9 Thickness Control

Completed thickness of the subgrade course shall be not more than 1/2 inch below the thickness indicated. Where more than 1/2 inch

deficient, such areas shall be corrected by scarifying, adding proper mixture, reblading, and recompacting as directed. The average of all thickness measurements taken for the job shall be within 1/4 inch of the thickness indicated.

3.1.10 Construction Joints

At the end of each phase of construction, a straight transverse construction joint shall be formed by cutting back into the completed work to form a true vertical face free of loose or shattered material. Material along construction joints not properly compacted shall be removed and replaced with soil-fly ash mixture that is mixed, moistened, and compacted as specified.

3.2 CURING

Immediately after finishing the surface shall be protected against rapid drying by bituminous material curing. Emulsified asphalt bituminous material shall be uniformly applied at a rate of 0.1 and 0.4 gallons per square yard by means of a bituminous distributor at a temperature within the following ranges:

RS-1 ..... 75-130F
RS-2 ..... 110-160F

Areas inaccessible to or missed by the distributor shall be properly treated using the manually operated hose attachment. At the time the bituminous material is applied, the surface of the area shall be free of loose or foreign matter. When necessary, the area shall be sprinkled immediately before the bituminous material is applied. The modified material shall be maintained at a moisture content satisfactory for proper curing for a period of 14 days or until the aggregate base material is placed, whichever occurs first.

3.3 PROTECTION

Completed portions of the subgrade may be opened immediately to light traffic provided the curing is not impaired. After the curing period, completed areas may be opened to all traffic, provided the course has hardened sufficiently to prevent marring or distorting of the surface by equipment or traffic. Heavy equipment shall not be permitted on the area during the curing period. Fly ash and water may be hauled over the completed area with pneumatic-tired equipment if approved. Finished portions of the surface that are traveled on by equipment used in constructing an adjoining section shall be protected in a manner to prevent equipment from marring or damaging completed work.

3.4 MAINTENANCE

The subgrade shall be maintained in a satisfactory condition until the completed work is accepted. Maintenance shall include immediate repairs of any defects and shall be repeated as often as necessary to keep the area intact. Defects shall be corrected as specified herein.

3.5 DISPOSAL OF UNSATISFACTORY MATERIALS

Removed in-place materials that are unsuitable for stabilization, material that is removed for the required correction of defective

areas, waste material, and debris shall be disposed of as directed.

3.6 SAMPLING AND TESTING

3.6.1 General Requirements

Sampling and testing shall be the Contractor's responsibility and shall be performed by an approved commercial testing laboratory or by facilities furnished by the Contractor. Approval of testing facilities shall be based on compliance with ASTM E 548 and no work requiring testing shall be permitted until the facilities have been inspected and approved. The first inspection shall be at the expense of the Government. Cost incurred for any subsequent inspection required because of failure of the facilities to pass the first inspection will be charged to the Contractor. Three copies of the test results shall be furnished the Contracting Officer within 24 hours of conclusion of the test.

3.6.2 Samples

Samples of fly ash shall be taken in accordance with ASTM C 50.

3.6.3 Testing

Field in-place density shall be determined in accordance with ASTM D 1556, or ASTM D 2922. If ASTM D 2922 is used, in place densities shall be checked by ASTM D 1556 at a frequency of one sand cone test for each 8 nuclear tests. The sand cone test shall be performed adjacent to the area where a nuclear density test was run to insure a proper correlation is established. Material from the sand cone location shall be tested to determine the laboratory maximum dry density as specified hereinafter. Moisture contents shall be determined in accordance with ASTM D 4643 or ASTM D 2216. If ASTM D 4643 is used, moisture contents shall be checked by ASTM D 2216 once per each ten microwave tests. At least one field density test and one moisture content test shall be performed for each 200 square yards of modified subgrade.

3.6.4 Thickness

Completed thicknesses of the stabilized course shall be within 1/2 inch of the thickness indicated. Where the measured thickness of the stabilized course is more than 1/2 inch deficient, such areas shall be corrected by scarifying, adding mixture of proper gradation, reblading, and recompacting as directed. Where the measured thickness of the stabilized course is more than 1/2 inch thicker than indicated, it shall be considered as conforming to the specified thickness requirement. Average job thickness shall be the average of all thickness measurements taken for the job, but shall be thin 1/4 inch of the thickness indicated. Thickness of the stabilized course shall be measured at intervals in such a manner as to ensure one measurement for each 250 square yards of stabilized course. Measurements shall be made in 3-inch diameter test holes penetrating the stabilized course.

3.6.5 Smoothness

The surface of the modified layer shall show no deviations in excess of 3/8 inch when tested with a 10-foot straightedge. Deviations exceeding this amount shall be corrected by removing

material and replacing with new material, or by reworking existing material and compacting, as directed. Measurements for deviation from grade and cross section shown shall be taken in successive positions parallel and perpendicular to the P.C. concrete pavement joint pattern.

3.6.6 Laboratory Density

The laboratory maximum dry density and optimum moisture content of the fly ash-soil mixture shall be determined from samples obtained at a selected sand cone test location. A minimum of one laboratory maximum density test shall be run each material. Additional laboratory density tests shall be run each material change. Tests shall be conducted in accordance with ASTM D 1557, Method D.

3.6.7 Chemical Analysis

Fly ash shall be tested for the specified chemical requirements in accordance with ASTM C 618.

-- End of Section --

SECTION 02511

CONCRETE SIDEWALKS AND CURBS AND GUTTERS

PART 1 GENERAL

1.1 REFERENCES

The publications listed below form a part of this specification to the extent referenced. The publications are referred to in the text by basic designation only.

AMERICAN ASSOCIATION OF STATE HIGHWAY AND TRANSPORTATION OFFICIALS (AASHTO)

AASHTO M 182	(1991) Burlap Cloth Made from Jute or Kenaf

AMERICAN SOCIETY FOR TESTING AND MATERIALS (ASTM)

ASTM A 185	(1990a) Steel Welded Wire Fabric, Plain, for Concrete Reinforcement
ASTM A 615	(1990) Deformed and Plain Billet-Steel Bars for Concrete Reinforcement
ASTM A 616	(1990) Rail-Steel Deformed and Plain Bars for Concrete Reinforcement
ASTM A 617	(1990) Axle-Steel Deformed and Plain Bars for Concrete Reinforcement
ASTM C 31	(1991) Making and Curing Concrete Test Specimens in the Field
ASTM C 143	(1990a) Slump of Hydraulic Cement Concrete
ASTM C 171	(1991) Sheet Materials for Curing Concrete
ASTM C 172	(1990) Sampling Freshly Mixed Concrete
ASTM C 173	(1978) Air Content of Freshly Mixed Concrete by the Volumetric Method
ASTM C 231	(1991b) Air Content of Freshly Mixed Concrete by the Pressure Method
ASTM C 309	(1991) Liquid Membrane-Forming Compounds for Curing Concrete
ASTM D 1751	(1983; R 1991) Preformed Expansion Joint Filler for Concrete Paving and Structural Construction (Nonextruding and Resilient Bituminous Types)
ASTM D 1752	(1984; R 1992) Preformed Sponge Rubber and Cork Expansion Joint Fillers for Concrete Paving and Structural Construction
ASTM D 3405	(1994) Joint Sealants, Hot-Applied, for Concrete and Asphalt Pavements

CORPS OF ENGINEERS (COE)

COE CRD-C 527 (1988) Standard Specification for Joint Sealants, Cold-Applied, Non-Jet-Fuel-Resistant, for Rigid and Flexible Pavements

1.2 SUBMITTALS

Government approval is required for submittals with a "GA" designation; submittals having an "FIO" designation are for information only. The following shall be submitted in accordance with Section 01330 SUBMITTAL PROCEDURES:

SD-09 Reports

Field Quality Control; FIO.

Copies of all test reports within 24 hours of completion of the test.

SD-18 Records

Concrete; FIO.

Copies of certified delivery tickets for all concrete used in the construction.

1.3 WEATHER LIMITATIONS

1.3.1 Placing During Cold Weather

Concrete placement shall be discontinued when the air temperature reaches 40 degrees F and is falling. Placement may begin when the air temperature reaches 35 degrees F and is rising. Provisions shall be made to protect the concrete from freezing during the specified curing period. If necessary to place concrete when the temperature of the air, aggregates, or water is below 35 degrees F, placement shall be approved in writing. Approval shall be contingent upon full conformance with the following provisions. The underlying material shall be prepared and protected so that it is entirely free of frost when the concrete is deposited. Mixing water and aggregates shall be heated as necessary to result in the temperature of the in-place concrete being between 50 and 85 degrees F. Methods and equipment for heating shall be approved. The aggregates shall be free of ice, snow, and frozen lumps before entering the mixer. Covering and other means shall be provided for maintaining the concrete at a temperature of at least 50 degrees F for not less than 72 hours after placing, and at a temperature above freezing for the remainder of the curing period.

1.3.2 Placing During Warm Weather

The temperature of the concrete as placed shall not exceed 85 degrees F except where an approved retarder is used. The mixing water and/or aggregates shall be cooled, if necessary, to maintain a satisfactory placing temperature. In no case shall the placing temperature exceed 95 degrees F.

1.4 PLANT, EQUIPMENT, MACHINES, AND TOOLS

1.4.1 General Requirements

Plant, equipment, machines, and tools used in the work shall be subject to approval and shall be maintained in a satisfactory working condition at all times. The equipment shall have the capability of producing the required product, meeting grade controls, thickness control and smoothness requirements as specified. Use of the equipment shall be discontinued if it produces unsatisfactory results. The Contracting Officer shall have access at all times to the plant and equipment to ensure proper operation and compliance with specifications.

1.4.2 Slip Form Equipment

Slip form paver or curb forming machine, will be approved based on trial use on the job and shall be self-propelled, automatically controlled, crawler mounted, and capable of spreading, consolidating, and shaping the plastic concrete to the desired cross section in one pass.

PART 2 PRODUCTS

2.1 CONCRETE

Concrete shall conform to the applicable requirements of Section 02513 CONCRETE PAVEMENT FOR ROADS AND AIRFIELDS except as otherwise specified. Concrete shall have a minimum compressive strength of 3500 psi at 28 days. Maximum size of aggregate shall be 1-1/2 inches.

2.1.1 Air Content

Mixtures shall have air content by volume of concrete of 5 to 7 percent, based on measurements made immediately after discharge from the mixer.

2.1.2 Slump

The concrete slump shall be 2 inches where determined in accordance with ASTM C 143.

2.1.3 Reinforcement Steel

Reinforcement bars shall conform to ASTM A 615, ASTM A 616, or ASTM A 617. Wire mesh reinforcement shall conform to ASTM A 185.

2.2 CONCRETE CURING MATERIALS

2.2.1 Impervious Sheet Materials

Impervious sheet materials shall conform to ASTM C 171, type optional, except that polyethylene film, if used, shall be white opaque.

2.2.2 Burlap

Burlap shall conform to AASHTO M 182.

2.2.3 White Pigmented Membrane-Forming Curing Compound

White pigmented membrane-forming curing compound shall conform to ASTM C 309, Type 2.

2.3 CONCRETE PROTECTION MATERIALS

Concrete protection materials shall be a linseed oil mixture of equal parts, by volume, of linseed oil and either mineral spirits, naphtha, or turpentine. At the option of the contractor, commercially prepared linseed oil mixtures, formulated specifically for application to concrete to provide protection against the action of deicing chemicals may be used, except that emulsified mixtures are not acceptable.

2.4 JOINT FILLER STRIPS

2.4.1 Contraction Joint Filler for Curb and Gutter

Contraction joint filler for curb and gutter shall consist of hard-pressed fiberboard.

2.4.2 Expansion Joint Filler, Premolded

Expansion joint filler, premolded, shall conform to ASTM D 1751 or ASTM D 1752, 3/8 inch thick, unless otherwise indicated.

2.5 JOINT SEALANTS

2.5.1 Joint Sealant, Cold-Applied

Joint sealant, cold-applied shall conform to COE CRD-C 527.

2.5.2 Joint Sealant, Hot-Poured

Joint sealant, hot-poured shall conform to ASTM D 3405.

2.6 FORM WORK

Form work shall be designed and constructed to insure that the finished concrete will conform accurately to the indicated dimensions, lines, and elevations, and within the tolerances specified. Forms shall be of wood or steel, straight, of sufficient strength to resist springing during depositing and consolidating concrete. Wood forms shall be surfaced plank, 2-inch nominal thickness, straight and free from warp, twist, loose knots, splits or other defects. Wood forms shall have a nominal length of 10 feet. Radius bends may be formed with 3/4-inch boards, laminated to the required thickness. Steel forms shall be channel-formed sections with a flat top surface and with welded braces at each end and at not less than two intermediate points. Ends of steel forms shall be interlocking and self-aligning. Steel forms shall include flexible forms for radius forming, corner forms, form spreaders, and fillers. Steel forms shall have a nominal length of 10 feet with a minimum of two welded stake pockets per form. Stake pins shall be solid steel rods with chamfered heads and pointed tips designed for use with steel forms.

2.6.1 Sidewalk Forms

Sidewalk forms shall be of a height equal to the full depth of the finished sidewalk.

2.6.2 Curb and Gutter Forms

Curb and gutter outside forms shall have a height equal to the full depth of the curb or gutter. The inside form of curb shall have batter as indicated and shall be securely fastened to and supported by the outside form. Rigid forms shall be provided for curb returns, except that benders or thin plank forms may be used for curb or curb returns with a radius of 10 feet or more, where grade changes occur in the return, or where the central angle is such that a rigid form with a central angle of 90 degrees cannot be used. Back forms for curb returns may be made of 1-1/2 inch benders, for the full height of the curb, cleated together.

2.6 SAND CUSHION

2.6.1 Concrete sand or washed bank sand with a maximum of 30% retained on the No. 10 sieve.

PART 3 EXECUTION

3.1 SUBGRADE AND SAND CUSHION PREPARATION

The subgrade shall be constructed to the specified grade and cross section prior to sand cushion placement. Subgrade shall be placed and compacted to conform with applicable requirements of Section 02210 GRADING.

3.1.1 Sidewalk Sand Cushion

Place 4 inches thick on the prepared subgrade and lightly tamp.

The sand cushion shall be tested for grade and cross section with a template extending the full width of the sidewalk and supported between side forms.

3.1.2 Maintenance of Sand Cushion

The sand cushion shall be maintained in a smooth, compacted condition in conformity with the required section and established grade until the concrete is placed.

3.2 FORM SETTING

Forms shall be carefully set to the indicated alignment, grade and dimensions. Forms shall be held rigidly in place by a minimum of three stakes per form placed at intervals not to exceed 4 feet. Corners, deep sections, and radius bends shall have additional stakes and braces, as required. Clamps, spreaders, and braces shall be used where required to insure rigidity in the forms. Forms shall be removed without injuring the concrete. Bars or heavy tools shall not be used against the concrete in removing the forms. Any concrete found defective after form removal shall be promptly and satisfactorily repaired. Forms shall be cleaned and coated with form oil each time before concrete is placed. Wood forms may, instead, be thoroughly wetted with water before

concrete is placed, except that with probable freezing temperatures, oiling is mandatory.

3.2.1 Sidewalks

Forms for sidewalks shall be set with the upper edge true to line and grade with an allowable tolerance of 1/8 inch in any 10-foot long section. After forms are set, grade and alignment shall be checked with a 10-foot straightedge. Forms shall have a transverse slope of 1/4-inch per foot with the low side adjacent to the roadway, unless indicated otherwise. Side forms shall not be removed for 12 hours after finishing has been completed.

3.3 SIDEWALK CONCRETE PLACEMENT AND FINISHING

3.3.1 Formed Sidewalks

Concrete shall be placed in the forms in one layer of such thickness that when consolidated and finished the sidewalks will be of the thickness indicated. After concrete has been placed in the forms, a strike-off guided by side forms shall be used to bring the surface to proper section to be compacted. The concrete shall be consolidated with an approved vibrator, and the surface shall be finished to grade with a wood float, bull float, or darby, edged and broom finished.

3.3.2 Concrete Finishing

After straightedging, when most of the water sheen has disappeared, and just before the concrete hardens, the surface shall be finished to a smooth and uniformly fine granular or sandy texture free of waves, irregularities, or tool marks. A scored surface shall be produced by brooming with a fiber-bristle brush in a direction transverse to that of the traffic.

3.3.3 Edge and Joint Finishing

All slab edges, including those at formed joints, shall be finished carefully with an edger having a radius of 1/8 inch. Transverse joint shall be edged before brooming, and the brooming shall eliminate the flat surface left by the surface face of the edger. Corners and edges which have crumbled and areas which lack sufficient mortar for proper finishing shall be cleaned and filled solidly with a properly proportioned mortar mixture and then finished.

3.3.4 Surface and Thickness Tolerances

Finished surfaces shall not vary more than 5/16 inch from the testing edge of a 10-foot straightedge. Permissible deficiency in section thickness will be up to 1/4 inch.

3.4 SIDEWALK JOINTS

Sidewalk joints shall be constructed to divide the surface into rectangular areas. Transverse contraction joints shall be spaced at a distance equal to the sidewalk width or 5 feet on centers, whichever is less, and shall be continuous across the slab. Longitudinal contraction joints shall be constructed along the centerline of all sidewalks 10 feet or more in width. Transverse expansion joints shall be installed at sidewalk returns and

opposite expansion joints in adjoining curbs. Where the sidewalk is not in contact with the curb, transverse expansion joints shall be installed as indicated. Expansion joints shall be formed about structures and features which project through or into the sidewalk pavement, using joint filler of the type, thickness, and width indicated.

3.4.1 Contraction Joints

The contraction joints shall be formed in the fresh concrete by cutting a groove in the top portion of the slab to a depth of at least one-fourth of the sidewalk slab thickness, using a jointer to cut the groove, or by sawing a groove in the hardened concrete with a power-driven saw, unless otherwise approved. Sawed joints shall be constructed by sawing a groove in the concrete with a 1/8-inch blade to the depth indicated. An ample supply of saw blades shall be available on the job before concrete placement is started, and at least one standby sawing unit in good working order shall be available at the jobsite at all times during the sawing operations.

3.4.2 Expansion Joints

Expansion joints shall be formed with 1/2 inch joint filler strips. Joint filler shall be placed with top edge 1/4 inch below the surface and shall be held in place with steel pins or other devices to prevent warping of the filler during floating and finishing. Immediately after finishing operations are completed, joint edges shall be rounded with an edging tool having a radius of 1/8 inch, and concrete over the joint filler shall be removed. At the end of the curing period, expansion joints shall be carefully cleaned and filled with joint sealer.

The joint opening shall be thoroughly cleaned before the sealing material is placed. Sealing shall be done so that the material will not be spilled on exposed surfaces of the concrete. Concrete at the joint shall be surface dry and atmospheric and concrete temperatures shall be above 50 degrees F at the time of application of joint sealing material. Excess material on exposed surfaces of the concrete shall be removed immediately and concrete surfaces cleaned.

3.4.3 Reinforcement Steel Placement

Reinforcement steel shall be accurately and securely fastened in place with suitable supports and ties before the concrete is placed.

3.5 CURING AND PROTECTION

3.5.1 General Requirements

Concrete shall be protected against loss of moisture and rapid temperature changes for at least 7 days from the beginning of the curing operation. Unhardened concrete shall be protected from rain and flowing water. All equipment needed for adequate curing and protection of the concrete shall be on hand and ready for use before actual concrete placement begins. Protection shall be provided as necessary to prevent cracking of the pavement due to temperature changes during the curing period.

3.5.1.1 Mat Method

The entire exposed surface shall be covered with two or more layers of burlap. Mats shall overlap each other at least 6 inches. The mat shall be thoroughly wetted with water prior to placing on concrete surface and shall be kept continuously in a saturated condition and in intimate contact with concrete for not less than 7 days.

3.5.1.2 Impervious Sheeting Method

The entire exposed surface shall be wetted with a fine spray of water and then covered with impervious sheeting material. Sheets shall be laid directly on the concrete surface with the light-colored side up and overlapped 12 inches when a continuous sheet is not used. The curing medium shall not be less than 18-inches wider than the concrete surface to be cured, and shall be securely weighted down by heavy wood planks, or a bank of moist earth placed along edges and laps in the sheets. Sheets shall be satisfactorily repaired or replaced if torn or otherwise damaged during curing. The curing medium shall remain on the concrete surface to be cured for not less than 7 days.

3.5.1.3 Membrane Curing Method

A uniform coating of white-pigmented membrane-curing compound shall be applied to the entire exposed surface of the concrete as soon after finishing as the free water has disappeared from the finished surface. Formed surfaces shall be coated immediately after the forms are removed and in no case longer than 1 hour after the removal of forms. Concrete shall not be allowed to dry before the application of the membrane. If any drying has occurred, the surface of the concrete shall be moistened with a fine spray of water and the curing compound applied as soon as the free water disappears. Curing compound shall be applied in two coats by hand-operated pressure sprayers at a coverage of approximately 200 square feet per gallon for both coats. The second coat shall be applied in a direction approximately at right angles to the direction of application of the first coat. The compound shall form a uniform, continuous, coherent film that will not check, crack, or peel and shall be free from pinholes or other imperfections. If pinholes, abrasion, or other discontinuities exist, an additional coat shall be applied to the affected areas within 30 minutes. Concrete surfaces that are subjected to heavy rainfall within 3 hours after the curing compound has been applied shall be resprayed by the method and at the coverage specified above. Areas where the curing compound is damaged by subsequent construction operations within the curing period shall be resprayed. Necessary precautions shall be taken to insure that the concrete is properly cured at sawed joints, and that no curing compound enters the joints. The top of the joint opening and the joint groove at exposed edges shall be tightly sealed before the concrete in the region of the joint is resprayed with curing compound. The method used for sealing the joint groove shall prevent loss of moisture from the joint during the entire specified curing period. Approved standby facilities for curing concrete pavement shall be provided at a location accessible to the jobsite for use in the event of mechanical failure of the spraying equipment or other conditions that might prevent correct application of the membrane-curing compound at the proper time. Concrete surfaces to which membrane-curing compounds have been

applied shall be adequately protected during the entire curing period from pedestrian and vehicular traffic, except as required for joint-sawing operations and surface tests, and from any other possible damage to the continuity of the membrane.

3.5.2 Backfilling

After curing, debris shall be removed and the area adjoining the concrete shall be backfilled, graded, and compacted to conform to the surrounding area in accordance with lines and grades indicated.

3.5.3 Protection

Completed concrete shall be protected from damage until accepted. The Contractor shall repair damaged concrete and clean concrete discolored during construction. Concrete that is damaged shall be removed and reconstructed for the entire length between regularly scheduled joints. Refinishing the damaged portion will not be acceptable. Removed damaged portions shall be disposed of as directed.

3.6 FIELD QUALITY CONTROL

3.6.1 General Requirements

The Contractor shall perform the inspection and tests described and meet the specified requirements for inspection details and frequency of testing. Based upon the results of these inspections and tests, the Contractor shall take the action and submit reports as required below, and any additional tests to insure that the requirements of these specifications are met.

3.6.2 Concrete Testing

3.6.2.1 Strength Testing

The Contractor shall provide molded concrete specimens for strength tests. Samples of concrete placed each day shall be taken not less than once a day nor less than once for every 250 cubic yards of concrete. The samples for strength tests shall be taken in accordance with ASTM C 172. Cylinders for acceptance shall be molded in conformance with ASTM C 31 by an approved testing laboratory. Each strength test result shall be the average of two test cylinders from the same concrete sample tested at 28 days, unless otherwise specified or approved. Concrete specified on the basis of compressive strength will be considered satisfactory if the averages of all sets of three consecutive strength test results equal or exceed the specified strength, and no individual strength test result falls below the specified strength by more than 500 psi.

3.6.2.2 Air Content

Air content shall be determined in accordance with ASTM C 173 or ASTM C 231. ASTM C 231 shall be used with concretes and mortars made with relatively dense natural aggregates. Two tests for air content shall be made on randomly selected batches of each class of concrete placed during each shift. Additional tests shall be made when excessive variation in concrete workability is reported by the placing foreman or the Government inspector. If results

are out of tolerance, the placing foreman shall be notified and he shall take appropriate action to have the air content corrected at the plant. Additional tests for air content will be performed on each truckload of material until such time as the air content is within the tolerance specified.

3.6.2.3 Slump Test

Two slump tests shall be made on randomly selected batches of each class of concrete for every 250 cubic yards, or fraction thereof, of concrete placed during each shift. Additional tests will be performed when excessive variation in the workability of the concrete is noted or when excessive crumbling or slumping is noticed along the edges of slip-formed concrete.

3.6.3 Thickness Evaluation

The anticipated thickness of the concrete shall be determined prior to placement by passing a template through the formed section or by measuring the depth of opening of the extrusion template of the curb forming machine. If a slip form paver is used for sidewalk placement, the sand cushion shall be true to grade prior to concrete placement and the thickness will be determined by measuring each edge of the completed slab.

3.6.4 Surface Evaluation

The finished surface of each category of the completed work shall be uniform in color and free of blemishes and form or tool marks.

3.7 SURFACE DEFICIENCIES AND CORRECTIONS

3.7.1 Thickness Deficiency

When measurements indicate that the completed concrete section is deficient in thickness by more than 1/4 inch the deficient section will be removed, between regularly scheduled joints, and replaced.

3.7.2 High Areas

In areas not meeting surface smoothness and plan grade requirements, high areas shall be reduced either by rubbing the freshly finished concrete with carborundum brick and water when the concrete is less than 36 hours old or by grinding the hardened concrete with an approved surface grinding machine after the concrete is 36 hours old or more. The area corrected by grinding the surface of the hardened concrete shall not exceed 5 percent of the area of any integral slab, and the depth of grinding shall not exceed 1/4 inch. All pavement areas requiring grade or surface smoothness corrections in excess of the limits specified above shall be removed and replaced.

3.7.3 Appearance

Exposed surfaces of the finished work will be inspected by the Government and any deficiencies in appearance will be identified. Areas which exhibit excessive cracking, discoloration, form marks, or tool marks or which are otherwise inconsistent with the overall appearances of the work shall be removed and replaced.

-- End of Section --

SECTION 02580

PAVEMENT MARKINGS

PART 1 GENERAL

1.1 REFERENCES

The publications listed below form a part of this specification to the extent referenced. The publications are referred to in the text by basic designation only.

AMERICAN ASSOCIATION OF STATE HIGHWAY AND TRANSPORTATION OFFICIALS (AASHTO)

AASHTO M 248 (1991I) Ready-Mixed White and Yellow Traffic Paints

1.2 SUBMITTALS

Government approval is required for submittals with a "GA" designation; submittals having an "FIO" designation are for information only. The following shall be submitted in accordance with Section 01330 SUBMITTAL PROCEDURES:

SD-13 Certificates

Volatile Organic Compound (VOC) Content; FIO.

Certificate stating that the proposed pavement marking paint meets the VOC regulations of the local Air Pollution Control District having jurisdiction over the geographical area in which the project is located.

1.3 DELIVERY AND STORAGE

All materials shall be delivered and stored in sealed containers that plainly show the designated name, formula or specification number, batch number, color, date of manufacture, manufacturer's name, and directions, all of which shall be plainly legible at time of use.

1.4 HAND-OPERATED, PUSH-TYPE MACHINES

All machines, tools, and equipment used in performance of the work shall be approved and maintained in satisfactory operating condition. Hand-operated push-type machines of a type commonly used for application of paint to pavement surfaces shall be acceptable for marking parking areas. Applicator machine shall be equipped with the necessary paint tanks and spraying nozzles, and shall be capable of applying paint uniformly at coverage specified. Sandblasting equipment shall be provided as required for cleaning surfaces to be painted. Hand-operated spray guns shall be provided for use in areas where push-type machines cannot be used.

PART 2 PRODUCTS

2.1 PAINT

The paint shall be homogeneous, easily stirred to smooth consistency, and shall show no hard settlement or other objectionable characteristics during a storage period of 6 months. Paint for parking lots shall conform to AASHTO M 248, color as selected. Pavement marking paints shall comply with applicable state and local laws enacted to ensure compliance with Federal Clean Air Standards. Paint materials shall conform to the restrictions of the local Air Pollution Control District.

PART 3 EXECUTION

3.1 SURFACE PREPARATION

Surfaces to be marked shall be thoroughly cleaned before application of the pavement marking material. Dust, dirt, and other granular surface deposits shall be removed by sweeping, blowing with compressed air, rinsing with water or a combination of these methods as required. Rubber deposits, surface laitance, existing paint markings, and other coatings adhering to the pavement shall be completely removed with scrapers, wire brushes, sandblasting, approved chemicals, or mechanical abrasion as directed. Areas affected with oil or grease shall be scrubbed with several applications of trisodium phosphate solution or other approved detergent or degreaser, and rinsed thoroughly after each application. After cleaning, oil-soaked areas shall be sealed with cut shellac to prevent bleeding through the new paint. Pavement surfaces shall be allowed to dry, when water is used for cleaning, prior to striping or marking. Surfaces shall be recleaned, when work has been stopped due to rain.

3.1.1 Cleaning Concrete Curing Compounds

On new portland cement concrete pavements, cleaning operations shall not begin until a minimum of 30 days after the placement of concrete. All new concrete pavements shall be cleaned by either sandblasting or water blasting. The extent of the blasting work shall be to clean and prepare the concrete surface as follows:

a. There is no visible evidence of curing compound on the peaks of the textured concrete surface.

b. There are no heavy puddled deposits of curing compound in the valleys of the textured concrete surface.

c. All remaining curing compound is intact; all loose and flaking material is removed.

d. The peaks of the textured pavement surface are rounded in profile and free of sharp edges and irregularities.

e. The surface to be marked is dry.

3.2 APPLICATION

All pavement markings and patterns shall be placed as shown on the plans.

3.2.1 Paint

Paint shall be applied to clean, dry surfaces, and only when air and pavement temperatures are above 40 degrees F and less than 95 degrees F. Paint temperature shall be maintained within these same limits. New portland cement concrete shall be allowed to cure for a period of not less than 30 days before applications of paint. Paint shall be applied pneumatically with approved equipment at rate of coverage specified herein. The Contractor shall provide guide lines and templates as necessary to control paint application. Edges of markings shall be sharply outlined.

3.2.1.1 Rate of Application

Nonreflective Markings: Paint shall be applied evenly to the pavement surface to be coated at a rate of 105 plus or minus 5 square feet per gallon.

3.2.1.2 Drying

The maximum drying time requirements of the paint specifications will be strictly enforced to prevent undue softening of bitumen, and pickup, displacement, or discoloration by tires of traffic. If there is a delay in drying of the markings, painting operations shall be discontinued until cause of the slow drying is determined and corrected.

-- End of Section --

SECTION 02592A

FIELD MOLDED SEALANTS FOR SEALING JOINTS IN RIGID PAVEMENTS

PART 1 GENERAL

1.1 REFERENCES

The publications listed below form a part of this specification to the extent referenced. The publications are referred to in the text by basic designation only.

AMERICAN SOCIETY FOR TESTING AND MATERIALS (ASTM)

ASTM C 509	(1990) Elastomeric Cellular Preformed Gasket and Sealing Material
ASTM D 789	(1991) Determination of Relative Viscosity, Melting Point, and Moisture Content of Polyamide (PA)

FEDERAL SPECIFICATIONS (FS)

FS SS-S-1401	(Rev C; Notice 1) Sealant, Joint, Non-Jet-Fuel-Resistant, Hot-Applied, for Portland Cement and Asphalt Concrete Pavements

1.2 SUBMITTALS

Government approval is required for submittals with a "GA" designation; submittals having an "FIO" designation are for information only. The following shall be submitted in accordance with Section 01300 SUBMITTAL DESCRIPTIONS:

SD-06 Instructions

Manufacturer's Recommendations; FIO.

Installation procedures in accordance with the manufacturer's recommendations, 30 days prior to use on the project.

1.3 SAFETY

Joint sealant shall not be placed within 25 feet of any liquid oxygen (LOX) equipment, LOX storage, or LOX piping. Joints in this area shall be thoroughly cleaned and left unsealed.

1.4 EQUIPMENT

Machines, tools, and equipment used shall be as required by the sealant manufacturer.

This section revised
by AMDT 0001

1.5 TRIAL JOINT SEALANT INSTALLATION

Prior to the cleaning and sealing of the joints for the entire project, a test section shall be prepared using the specified materials and approved equipment, so as to demonstrate the proposed joint preparation and sealing of all types of joints in the project. Following the completion of the test section and before any other joint is sealed, the test section shall be inspected to determine that the materials and installation meet the requirements specified. If it is determined that the materials or installation do not meet the requirements, the materials shall be removed, and the joints shall be recleaned and resealed at no cost to the Government. When the test section meets the requirements, it may be incorporated into the permanent work and paid for at the contract unit price per linear foot for sealing items scheduled. All other joints shall be prepared and sealed in the manner approved for sealing the test section.

1.6 DELIVERY AND STORAGE

Materials delivered to the job site shall be inspected for defects, unloaded, and stored with a minimum of handling to avoid damage. Storage facilities shall be provided at the job site for maintaining materials at the temperatures and conditions recommended by the manufacturer.

1.7 ENVIRONMENTAL CONDITIONS

The ambient air temperature and the pavement temperature within the joint wall shall be a minimum of 50 degrees F and rising at the time of application of the materials. Sealant shall not be applied if moisture is observed in the joint.

PART 2 PRODUCTS

2.1 SEALANTS

Materials for sealing joints and material referenced as "compatible sealer" shall be FS SS-S-1401.

2.2 PRIMERS

Primers shall be as recommended by the manufacturer of the sealant.

2.3 BACKUP MATERIALS

The backup material shall be a compressible, nonshrinking, nonstaining, nonabsorbing material and shall be nonreactive with the joint sealant. The material shall have a melting point at least 5 degrees F greater than the pouring temperature of the sealant being used when tested in accordance with ASTM D 789. The material shall have a water absorption of not more than 5 percent of the sample weight when tested in accordance with ASTM C 509. The backup material shall be 25 plus or minus 5 percent larger in diameter than the nominal width of the crack.

This section revised
by AMDT 0001

2.4 BOND BREAKING TAPES

The bond breaking tape or separating material shall be a flexible, nonshrinkable, nonabsorbing, nonstaining, and nonreacting adhesive-backed tape. The material shall have a melting point at least 5 degrees F greater than the pouring temperature of the sealant being used when tested in accordance with ASTM D 789. The bond breaker tape shall be approximately 1/8-inch wider than the nominal width of the joint and shall not bond to the joint sealant.

PART 3 EXECUTION

3.1 PREPARATION OF JOINTS

Immediately before the installation of the sealant, the joints shall be thoroughly cleaned to remove all laitance, curing compound, filler, protrusions of hardened concrete, and old sealant from the sides and upper edges of the joint space to be sealed.

3.1.1 Sawing

Sawing shall be done with a concrete saw that has the blade stiffened with dummy or used blades or washers. Sawing shall remove material until the joint is open to the full specified width and depth.

3.1.2 Blast-Cleaning

The newly exposed concrete joint faces and the pavement surfaces extending a minimum of-1/2 inch from the joint edges shall be sandblasted or waterblasted clean. A multiple-pass technique shall be used until the surfaces are free of dust, dirt, curing compound, filler, old sealant residue, or any foreign debris that might prevent the bonding of the sealant to the concrete. After final cleaning and immediately prior to sealing, the joints shall be blown out with compressed air and left completely free of debris and water.

3.1.3 Back-Up Material

When the joint opening is of a greater depth than indicated for the sealant depth, the lower portion of the joint opening shall be plugged or sealed off using a back-up material to prevent the entrance of the sealant below the specified depth. Care shall be taken to ensure that the backup material is placed at the specified depth and is not stretched or twisted during installation.

3.1.4 Bond Breaking Tape

Where inserts or filler materials contain bitumen, or the depth of the joint opening does not allow for the use of a backup material, a bond breaker separating tape will be inserted to prevent incompatibility with the filler materials and three-sided adhesion of the sealant. The tape shall be securely bonded to the bottom of the joint opening so it will not float up into the new sealant.

This section revised
by AMDT 0001

3.1.5 Rate of Progress of Joint Preparation

The stages of joint preparation which include blast-cleaning, compressed air cleaning and placing of the back-up material shall be limited to only that lineal footage that can be sealed during the same day.

3.2 PREPARATION OF SEALANT

3.2.1 Hot-Poured Sealants

Sealants shall not be heated in excess of the safe heating temperature recommended by the manufacturer as shown on the sealant containers. Sealant that has been overheated or subjected to application temperatures for over 4 hours or that has remained in the applicator at the end of the day's operation shall be withdrawn and wasted.

3.3 INSTALLATION OF SEALANT

3.3.1 Time of Application

Joints shall be sealed immediately following final cleaning of the joint walls and following the placement of the separating or backup material. Open joints that cannot be sealed under the conditions specified, or when rain interrupts sealing operations shall be recleaned and allowed to dry prior to installing the sealant.

3.3.2 Sealing Joints

Immediately preceding, but not more than 50 feet ahead of the joint sealing operations, a final cleaning with compressed air shall be performed. The joints shall be filled from the bottom up to 1/4 inch plus or minus l/16 inch below the pavement surface. Excess or spilled sealant shall be removed from the pavement by approved methods and shall be discarded. The sealant shall be installed in such a manner as to prevent the formation of voids and entrapped air. In no case shall gravity methods or pouring pots be used to install the sealant material. Traffic shall not be permitted over newly sealed pavement until authorized by the Contracting Officer. When a primer is recommended by the manufacturer, it shall be applied evenly to the joint faces in accordance with the manufacturer's instructions. Joints shall be checked frequently to ensure that the newly installed sealant is cured to a tack-free condition within the time specified.

3.4 INSPECTION

3.4.1 Joint Cleaning

Joints shall be inspected during the cleaning process to correct improper equipment and cleaning techniques that damage the concrete pavement in any manner. Cleaned joints shall be approved prior to installation of the separating or back-up material and joint sealant.

This section revised
by AMDT 0001

3.4.2 Joint Sealant Application Equipment

The application equipment shall be inspected to ensure conformance to temperature requirements, proper proportioning and mixing (if two-component sealant) and proper installation. Evidences of bubbling, improper installation, failure to cure or set shall be cause to suspend operations until causes of the deficiencies are determined and corrected.

3.4.3 Joint Sealant

The joint sealant shall be inspected for proper rate of cur- and set, bonding to the joint walls, cohesive separation within the sealant, reversion to liquid, entrapped air and voids. Sealants exhibiting any of these deficiencies at any time prior to the final acceptance of the project shall be removed from the joint, wasted, and replaced as specified herein at no additional cost to the Government.

3.5 CLEAN-UP

Upon completion of the project, all unused materials s-hall be removed from the site and the pavement shall be left in a clean condition.

-- End of Section --

This section revised
by AMDT 0001

WATER DISTRIBUTION SYSTEM

SECTION 02660

PART 1 GENERAL

1.1 REFERENCES

The publications listed below form a part of this specification to the extent referenced. The publications are referred to in the text by basic designation only.

AMERICAN SOCIETY FOR TESTING AND MATERIALS (ASTM)

ASTM B 88	(1993a) Seamless Copper Water Tube

AMERICAN SOCIETY OF MECHANICAL ENGINEERS (ASME)

ASME B16.26	(1988) Cast Copper Alloy Fittings for Flared Copper Tubes

AMERICAN WATER WORKS ASSOCIATION (AWWA)

AWWA B300	(1992) Hypochlorites
AWWA B301	(1992) Liquid Chlorine
AWWA C104	(1990) Cement-Mortar Lining for Ductile-Iron Pipe and Fittings for Water
AWWA C105	(1988) Polyethylene Encasement for Ductile-Iron Piping for Water and Other Liquids
AWWA C110	(1993) Ductile-Iron and Gray-Iron Fittings, 3 In. Through 48 In. (75 mm through 1200 mm), for Water and Other Liquids
AWWA C111	(1990) Rubber-Gasket Joints for Ductile-Iron Pressure Pipe and Fittings
AWWA C115	(1988) Flanged Ductile-Iron Pipe with Threaded Flanges
AWWA C151	(1991) Ductile-Iron Pipe, Centrifugally Cast, for Water or Other Liquids
AWWA C153	(1994) Ductile-Iron Compact Fittings, 3 In. Through 16 In., for Water and Other Liquids
AWWA C500	(1993) Gate Valves for Water and Sewerage Systems
AWWA C502	(1985) Dry-Barrel Fire Hydrants
AWWA C509	(1994) Resilient-Seated Gate Valves for Water and Sewerage Systems
AWWA C600	(1993) Installation of Ductile-Iron Water Mains and Their Appurtenances

AWWA C606 (1987) Grooved and Shouldered Joints

DUCTILE IRON PIPE RESEARCH ASSOCIATION (DIPRA)

DIPRA-01 (1992; Errata May 1993) Thrust Restraint Design for Ductile Iron Pipe

MANUFACTURERS STANDARDIZATION SOCIETY OF THE VALVE AND FITTINGS INDUSTRY (MSS)

MSS SP-80 (1987) Bronze Gate, Globe, Angle and Check Valves

NATIONAL FIRE PROTECTION ASSOCIATION (NFPA)

NFPA 24 (1992) Installation of Private Fire Service Mains and Their Appurtenances

STEEL STRUCTURES PAINTING COUNCIL (SSPC)

SSPC Paint 21 (1991) White or Colored Silicone Alkyd Paint

SSPC Paint 25 (1991) Red Iron Oxide, Zinc Oxide, Raw Linseed Oil and Alkyd Primer (without Lead and Chromate Pigments)

1.2 PIPING

This section covers water service lines, and connections to building service at a point approximately 5 feet outside buildings and structures to which service is required. The Contractor shall have a copy of the manufacturer's recommendations for each material or procedure to be utilized available at the construction site at all times.

1.2.1 Service Lines

Piping for water service lines less than 3 inches in diameter shall be copper tubing. Piping for water service lines for sizes 3 inches and larger shall be ductile iron.

1.2.2 Distribution Lines 3 Inches or Larger

Piping for water distribution lines 3 inches or larger shall be ductile iron.

1.2.3 Sprinkler Supply Lines

Piping for water lines supplying sprinkler systems for building fire protection shall conform to NFPA 24 from the point of connection with the water distribution system to the building 5 foot line.

1.2.4 Excavation, Trenching, and Backfilling

Excavation, trenching, and backfilling shall be in accordance with the applicable provisions of Section 02222 EXCAVATION, TRENCHING, AND BACKFILLING FOR UTILITIES SYSTEMS, except as modified herein.

1.3 SUBMITTALS

Government approval is required for submittals with a "GA" designation; submittals having an "FIO" designation are for information only. The following shall be submitted in accordance with Section 01300 SUBMITTAL PROCEDURES:

SD-06 Instructions

Installation; FIO.

The manufacturer's recommendations for each material or procedure to be utilized.

SD-08 Statements

Waste Water Disposal Method; GA.

The method proposed for disposal of waste water from hydrostatic tests and disinfection, prior to performing hydrostatic tests.

Satisfactory Installation; FIO.

A statement signed by the principal officer of the contracting firm stating that the installation is satisfactory and in accordance with the contract drawings and specifications and the manufacturer's prescribed procedures and techniques, upon completion of the project and before final acceptance.

SD-09 Reports

Bacteriological Disinfection; FIO.

Test results from commercial laboratory verifying disinfection.

SD-13 Certificates

1.4 HANDLING

Pipe and accessories shall be handled so as to ensure delivery to the trench in sound, undamaged condition. Particular care shall be taken not to injure the pipe coating or lining. If the coating or lining of any pipe or fitting is damaged, the repair shall be made by the Contractor at his expense in a satisfactory manner. No other pipe or material of any kind shall be placed inside a pipe or fitting after the coating has been applied. Pipe shall be carried into position and not dragged. Use of pinch bars and tongs for aligning or turning pipe will be permitted only on the bare ends of the pipe. The interior of pipe and accessories shall be thoroughly cleaned of foreign matter before being lowered into the trench and shall be kept clean during laying operations by plugging or other approved method. Before installation, the pipe shall be inspected for defects. Material found to be defective before or after laying shall be replaced with sound material without additional expense to the Government. Rubber gaskets that are not to be installed immediately shall be stored in a cool and dark place.

PART 2 PRODUCTS

2.1 PIPE

Pipe shall conform to the respective specifications and other requirements specified below.

2.1.1 Ductile-Iron Pipe

Ductile-iron pipe shall conform to AWWA C151, working pressure not less than 150 psi, unless otherwise shown or specified. Pipe shall be cement-mortar lined in accordance with AWWA C104. Linings shall be standard. When installed underground, pipe shall be encased with 8 mil thick polyethylene in accordance with AWWA C105. Flanged ductile iron pipe with threaded flanges shall be in accordance with AWWA C115.

2.1.6 Copper Tubing

Copper tubing shall conform to ASTM B 88, Type K, annealed.

2.2 FITTINGS AND SPECIALS

2.2.1 Ductile-Iron Pipe

Fittings and special shall be suitable for 150 psi pressure rating, unless otherwise specified. Fittings and specials for mechanical joint pipe shall conform to AWWA C110. Fittings and specials for use with push-on joint pipe shall conform to AWWA C110 and AWWA C111. Fittings and specials for grooved and shouldered end pipe shall conform to AWWA C606. Fittings and specials shall be cement-mortar lined (standard thickness) in accordance with AWWA C104. Ductile iron compact fittings shall conform to AWWA C153.

2.2.2 Copper Tubing

Fittings and specials shall be flared and conform to ASME B16.26.

2.3 JOINTS

2.3.1 Ductile-Iron Pipe

a. Mechanical joints shall be of the stuffing box type and shall conform to AWWA C111.

b. Push-on joints shall conform to AWWA C111.

c. Rubber gaskets and lubricant shall conform to the applicable requirements of AWWA C111.

2.3.2 Isolation Joints

Isolation joints shall be installed between nonthreaded ferrous and nonferrous metallic pipe, fittings and valves. Isolation joints shall consist of a sandwich-type flange isolation gasket of the dielectric type, isolation washers, and isolation sleeves for flange bolts. Isolation gaskets shall be full faced with outside diameter equal to the flange outside diameter. Bolt isolation sleeves shall be full length. Units shall be of a shape to

prevent metal-to-metal contact of dissimilar metallic piping elements.

a. Sleeve-type couplings shall be used for joining plain end pipe sections. The two couplings shall consist of one steel middle ring, two steel followers, two gaskets, and the necessary steel bolts and nuts to compress the gaskets.

b. Split-sleeve type couplings may be used in aboveground installations when approved in special situations and shall consist of gaskets and a housing in two or more sections with the necessary bolts and nuts.

2.3.3 Copper Tubing

Joints shall be compression-pattern flared and shall be made with fittings hereinafter specified.

2.4 VALVES

2.4.1 Gate Valves

Gate valves shall be designed for a working pressure of not less than 150 psi. Valve connections shall be as required for the piping in which they are installed. Valves shall have a clear waterway equal to the full nominal diameter of the valve, and shall be opened by turning counterclockwise. The operating nut or wheel shall have an arrow, cast in the metal, indicating the direction of opening.

a. Valves smaller than 3 inches shall be all bronze and shall conform to MSS SP-80, Type 1, Class 150.

b. Valves 3 inches and larger shall be iron body, bronze mounted, and shall conform to AWWA C500. Flanges shall not be buried. An approved pit shall be provided for all flanged connections.

c. Resilient-Seated Gate Valves: For valves 3 to 12 inches in size, resilient-seated gate valves shall conform to AWWA C509.

2.4.2 Indicator Post for Valves

Each valve shown on the drawings with the designation "P.I.V." shall be equipped with indicator post conforming to the requirements of NFPA 24. Operation shall be by a wrench which will be attached to each post.

2.5 VALVE BOXES

Valve boxes shall be cast iron or concrete, except that concrete boxes may be installed only in locations not subjected to vehicular traffic. Cast-iron boxes shall be extension type with slide-type adjustment and with flared base. The minimum thickness of metal shall be 3/16 inch. Concrete boxes shall be the standard product of a manufacturer of precast concrete equipment. The word "WATER" shall be cast in the cover. The box length shall adapt, without full extension, to the depth of cover required over the pipe at the valve location.

2.6 FIRE HYDRANTS

Hydrants shall be dry-barrel type conforming to AWWA C502 with valve opening at least 5 inches in diameter and designed so that the flange at the main valve seat can be removed with the main valve seat apparatus remaining intact, closed and reasonably tight against leakage and with a breakable valve rod coupling and breakable flange connections located no more than 8 inches above the ground grade. Hydrants shall have a 6 inch bell connection, two 2-1/2 inch hose connections and one 4-1/2 inch pumper connection. Outlets shall have American National Standard fire-hose coupling threads. Working parts shall be bronze. Design, material, and workmanship shall be similar and equal to the latest stock pattern ordinarily produced by the manufacturer. Hydrants shall be painted with one coat of red iron oxide, zinc oxide primer conforming to SSPC Paint 25 and two finish coats of silicone alkyd paint conforming to SSPC Paint 21, of the installation's standard colors or as directed by the Contracting Officer. Suitable bronze adapter for 4-1/2 inch each outlet, with caps, shall be furnished.

2.7 MISCELLANEOUS ITEMS

2.7.1 Disinfection

Chlorinating materials shall conform to the following:

Chlorine, Liquid: AWWA B301.

Hypochlorite, Calcium and Sodium: AWWA B300.

PART 3 EXECUTION

3.1 INSTALLATION

3.1.1 Cutting of Pipe

Cutting of pipe shall be done in a neat and workmanlike manner without damage to the pipe. Unless otherwise recommended by the manufacturer and authorized by the Contracting Officer, cutting shall be done with an approved type mechanical cutter. Wheel cutter shall be used when practicable. Copper tubing shall be cut square and all burrs shall be removed. Squeeze type mechanical cutters shall not be used for ductile iron.

3.1.2 Adjacent Facilities

3.1.2.1 Sewer Lines

Where the location of the water pipe is not clearly defined in dimensions on the drawings, the water pipe shall not be laid closer horizontally than 10 feet from a sewer except where the bottom of the water pipe will be at least 12 inches above the top of the sewer pipe, in which case the water pipe shall not be laid closer horizontally than 6 feet from the sewer. Where water lines cross under gravity-flow sewer lines, the sewer pipe for a distance of at least 10 feet each side of the crossing shall be fully encased in concrete or shall be made of pressure pipe with no joint located within 3 feet horizontally of the crossing.

Joints in the sewer main, closer horizontally than 3 feet to the crossing, shall be encased in concrete.

3.1.2.2 Water Lines

Water lines shall not be laid in the same trench with sewer lines, gas lines, fuel lines, or electric wiring.

3.1.2.3 Copper Tubing

Copper tubing shall not be installed in the same trench with ferrous piping materials.

3.1.2.4 Nonferrous Metallic Pipe

Where nonferrous metallic pipe, e.g. copper tubing, crosses any ferrous piping material, a minimum vertical separation of 12 inches shall be maintained between pipes.

3.1.3 Joint Deflection

3.1.3.1 Ductile-Iron Pipe

The maximum allowable deflection shall be as given in AWWA C600. If the alignment requires deflection in excess of the above limitations, special bends or a sufficient number of shorter lengths of pipe shall be furnished to provide angular deflections within the limit set forth.

3.1.4 Placing and Laying

Pipe and accessories shall be carefully lowered into the trench by means of derrick, ropes, belt slings, or other authorized equipment. Under no circumstances shall any of the water-line materials be dropped or dumped into the trench. Care shall be taken to avoid abrasion of the pipe coating. Except where necessary in making connections with other lines or as authorized by the Contracting Officer, pipe shall be laid with the bells facing in the direction of laying. The full length of each section of pipe shall rest solidly upon the pipe bed, with recesses excavated to accommodate bells, couplings, and joints. Pipe that has the grade or joint disturbed after laying shall be taken up and relaid. Pipe shall not be laid in water or when trench conditions are unsuitable for the work. Water shall be kept out of the trench until joints are complete. When work is not in progress, open ends of pipe, fittings, and valves shall be securely closed so that no trench water, earth, or other substance will enter the pipes or fittings. Where any part of the coating or lining is damaged, the repair shall be made by the Contractor at his expense in a satisfactory manner. Pipe ends left for future connections shall be valved, plugged, or capped, and anchored, as shown.

3.1.4.1 Connections

Where connections are made between new work and existing mains, the connections shall be made by using specials and fittings to suit the actual conditions. The existing main shall be shut down and the new connection shall be cut into the existing main. The use of tapping sleeves and valves will not be permitted.

3.1.4.4 Penetrations

Pipe passing through walls of structures shall be provided with ductile-iron or Schedule 40 steel wall sleeves. Annular space between walls and sleeves shall be filled with rich cement mortar. Annular space between pipe and sleeves shall be filled with mastic.

3.1.4.5 Flanged Pipe

Flanged pipe shall only be installed above ground or with the flanges inside structures.

3.1.5 Jointing

3.1.5.1 Ductile-Iron Pipe

Mechanical and push-on type joints shall be installed in accordance with AWWA C600 for buried lines.

3.1.5.2 Copper Tubing

Joints shall be made with flared fittings. The flared end tube shall be pulled tightly against the tapered part of the fitting by a nut which is part of the fitting, so there is metal-to-metal contact.

3.1.5.3 Isolation Joints and Dielectric Fittings

Isolation joints and dielectric fittings shall be installed in accordance with details specified in paragraph JOINTS. Dielectric unions shall be encapsulated in a field-poured coal-tar covering, with at least 1/8 inch thickness of coal tar over all fitting surfaces.

3.1.5.4 Connections

Connections between different types of pipe and accessories shall be made with transition fittings approved by the Contracting Officer.

3.1.6 Service Lines

Service lines shall include the pipeline connecting building piping to water distribution lines to the connections with the building service at a point approximately 5 feet outside the building where such building service exists. Where building services are not installed, the Contractor shall terminate the service lines approximately 5 feet from the site of the proposed building at a point designated by the Contracting Officer. Such service lines shall be closed with plugs or caps. All service stops and valves shall be provided with service boxes. Service lines shall be constructed in accordance with the following requirements:

3.1.6.1 Service Lines 2 Inches and Smaller

Service lines 2 inches and smaller shall be connected to the larger service line by a tee fitting.

3.1.6.2 Service Lines 2 Inches in Size

Service lines 2 inches in size shall have a gate valve at the tee connection to the larger service line.

3.1.6.3 Service Lines Larger than 2 Inches

Service lines larger than 2 inches shall be connected to the main by cutting in a cross. Shut down the main and make a wet connection. Provide solid sleeves and necessary coupling adapters. Tapping sleeves and valves will not be allowed.

3.1.6.4 Service Lines for Sprinkler Supplies

Water service lines used to supply building sprinkler systems for fire protection shall be connected to the water distribution main in accordance with NFPA 24.

3.1.7 Setting of Fire Hydrants, Valves and Valve Boxes

3.1.7.1 Fire Hydrants

Fire hydrants shall be located and installed as shown. Each hydrant shall be connected to the main with a 6 inch branch line having at least as much cover as the distribution main. Hydrants shall be set plumb with pumper nozzle facing the roadway, with the center of the lowest outlet not less than 18 inches above the finished surrounding grade, and the operating nut not more than 48 inches above the finished surrounding grade. Except where approved otherwise, the backfill around hydrants shall be thoroughly compacted to the finished gradeline immediately after installation to obtain beneficial use of the hydrant as soon as practicable. The hydrant shall be set upon a slab of concrete not less than 4 inches thick and 15 inches square. Not less than 7 cubic feet of free-draining broken stone or gravel shall be placed around and beneath the waste opening of dry barrel hydrants to ensure drainage.

3.1.7.2 Valves

After delivery, valves, including those in hydrants, shall be drained to prevent freezing and shall have the interiors cleaned of all foreign matter before installation. Stuffing boxes shall be tightened and hydrants and valves shall be fully opened and fully closed to ensure that all parts are in working condition. Valves and valve boxes shall be installed where shown or specified, and shall be set plumb. Valve boxes shall be centered on the valves. Boxes shall be installed over each outside gate valve unless otherwise shown. Where feasible, valves shall be located outside the area of roads and streets. Earth fill shall be carefully tamped around each valve box or pit to a distance of 4 feet on all sides of the box, or the undisturbed trench face if less than 4 feet.

3.1.8 Tees and Crosses

Tees and crosses shall be installed where shown.

3.1.9 Thrust Restraint

Plugs, caps, tees and bends deflecting 11-1/4 degrees or more, either vertically or horizontally, on waterlines 4 inches in diameter or larger, and fire hydrants shall be provided with thrust restraints. Valves shall be securely anchored or shall be provided with thrust restraints to prevent movement. Thrust restraints shall be either thrust blocks or, for ductile-iron pipes, restrained joints.

3.1.9.1 Thrust Blocks

Thrust blocking shall be concrete of a mix not leaner than: 1 cement, 2-1/2 sand, 5 gravel; and having a compressive strength of not less than 2,000 psi after 28 days. Blocking shall be placed between solid ground and the hydrant or fitting to be anchored. Unless otherwise indicated or directed, the base and thrust bearing sides of thrust blocks shall be poured directly against undisturbed earth. The sides of thrust blocks not subject to thrust may be poured against forms. The area of bearing shall be as shown or as directed. Blocking shall be placed so that the fitting joints will be accessible for repair. Steel rods and clamps, protected by galvanizing or by coating with bituminous paint, shall be used to anchor vertical down bends into gravity thrust blocks.

3.1.9.2 Restrained Joints

For ductile-iron pipe, restrained joints shall be designed by the Contractor or the pipe manufacturer in accordance with DIPRA-01.

3.2 HYDROSTATIC TESTS

Where any section of a water line is provided with concrete thrust blocking for fitting or hydrants, the hydrostatic tests shall not be made until at least 5 days after installation of the concrete thrust blocking, unless otherwise approved.

3.2.1 Pressure Test

After the pipe is laid, the joints completed, fire hydrants permanently installed, and the trench partially backfilled leaving the joints exposed for examination, the newly laid piping or any valved section of piping shall, unless otherwise specified, be subjected for 1 hour to a hydrostatic pressure test of 200 psi. Each valve shall be opened and closed several times during the test. Exposed pipe, joints, fittings, hydrants, and valves shall be carefully examined during the partially open trench test. Joints showing visible leakage shall be replaced or remade as necessary. Cracked or defective pipe, joints, fittings, hydrants and valves, discovered in consequence of this pressure test shall be removed and replaced with sound material, and the test shall be repeated until the test results are satisfactory. The requirement for the joints to remain exposed for the hydrostatic tests may be waived by the Contracting Officer when one or more of the following conditions is encountered:

a. Wet or unstable soil conditions in the trench.

b. Compliance would require maintaining barricades and walkways around and across an open trench in a heavily used area that would require continuous surveillance to assure safe conditions.

c. Maintaining the trench in an open condition would delay completion of the contract.

The Contractor may request a waiver, setting forth in writing the reasons for the request and stating the alternative procedure proposed to comply with the required hydrostatic tests. Backfill placed prior to the tests shall be placed in accordance with the requirements of Section 02222 EXCAVATION, TRENCHING, AND BACKFILLING FOR UTILITIES SYSTEMS.

3.2.2 Leakage Test

Leakage test shall be conducted after the pressure tests have been satisfactorily completed. The duration of each leakage test shall be at least 2 hours, and during the test the water line shall be subjected to not less than 200 psi pressure. Leakage is defined as the quantity of water to be supplied into the newly laid pipe, or any valved or approved section thereof, necessary to maintain pressure within 5 psi of the specified leakage test pressure after the pipe has been filled with water and the air expelled. No piping installation will be accepted if leakage exceeds the allowable leakage which is determined by the following formula:

L 0.0001351ND(P raised to 1/2 power)

L Allowable leakage in gallons per hour N Number of joints in the length of pipeline tested D Nominal diameter of the pipe in inches P Average test pressure during the leakage test, in psi gauge

Should any test of pipe disclose leakage greater than that calculated by the above formula, the defective joints shall be located and repaired until the leakage is within the specified allowance, without additional cost to the Government.

3.2.3 Time for Making Test

Except for joint material setting or where concrete thrust blocks necessitate a 5-day delay, pipelines jointed with rubber gaskets, mechanical or push-on joints, or couplings may be subjected to hydrostatic pressure, inspected, and tested for leakage at any time after partial completion of backfill. Cement-mortar lined pipe may be filled with water as recommended by the manufacturer before being subjected to the pressure test and subsequent leakage test.

3.2.4 Concurrent Hydrostatic Tests

The Contractor may elect to conduct the hydrostatic tests using either or both of the following procedures. Regardless of the sequence of tests employed, the results of pressure tests, leakage tests, and disinfection shall be satisfactory as specified. All replacement, repair or retesting required shall be accomplished by the Contractor at no additional cost to the Government.

a. Pressure test and leakage test may be conducted concurrently.

b. Hydrostatic tests and disinfection may be conducted concurrently, using the water treated for disinfection to accomplish the hydrostatic tests. If water is lost when treated for disinfection and air is admitted to the unit being tested, or if any repair procedure results in contamination of the unit, disinfection shall be reaccomplished.

3.3 DISINFECTION

3.3.1 Bacteriological Disinfection

Before acceptance of potable water operation, each unit of completed waterline shall be disinfected as specified herein. After pressure tests have been made, the unit to be disinfected shall be thoroughly flushed with water until all entrained dirt and mud have been removed before introducing the chlorinating material. The chlorinating material shall be either liquid chlorine, calcium hypochlorite, or sodium hypochlorite, conforming to paragraph MISCELLANEOUS ITEMS. The chlorinating material shall provide a dosage of not less than 50 ppm and shall be introduced into the water lines in an approved manner. Polyvinyl Chloride (PVC) pipe lines shall be chlorinated using only the above specified chlorinating material in solution. In no case will the agent be introduced into the line in a dry solid state. The treated water shall be retained in the pipe long enough to destroy all non-spore-forming bacteria. Except where a shorter period is approved, the retention time shall be at least 24 hours and shall produce not less than 25 ppm of free chlorine residual throughout the line at the end of the retention period. All valves on the lines being disinfected shall be opened and closed several times during the contact period. The line shall then be flushed with clean water until the residual chlorine is reduced to less than 1.0 ppm. During the flushing period, each fire hydrant on the line shall be opened and closed several times. From several points in the unit, personnel from the Contractor's commercial laboratory shall take at least 3 water samples from different points, approved by the Contracting Officer, in proper sterilized containers and perform a bacterial examination in accordance with state approved methods. The commercial laboratory must be certified by the state's approving authority for examination of potable water. The disinfection shall be repeated until tests indicate the absence of pollution for at least 2 full days. The unit will not be accepted until satisfactory bacteriological results have been obtained.

3.3.2 Lead Residual

Following the bacteriological disinfection and testing, the system shall be flushed with a sufficient velocity of water and sufficient tests performed at each hot- and cold-water discharge point until no more than 15 ppb lead residuals remain in the system. All tests and samples shall be performed in accordance with state and, if applicable, Federal regulations. Samples for testing are to be collected after a 6-hour continuous period of no flushing, and will be considered first draw samples. The commercial laboratory must be certified by the state's approving authority for examination of potable water. Lead residual test results are to be submitted to the Contracting Officer. The system will not be accepted until satisfactory bacteriological results and lead residual test results have been obtained. All

flushing and testing for lead residuals, including all costs, are the responsibility of the Contractor.

3.4 CLEANUP

Upon completion of the installation of water lines, and appurtenances, all debris and surplus materials resulting from the work shall be removed.

-- End of Section --

SECTION 02685

GAS DISTRIBUTION SYSTEM

PART 1 GENERAL

1.1 REFERENCES

The publications listed below form a part of this specification to the extent referenced. The publications are referred to in the text by basic designation only.

AMERICAN GAS ASSOCIATION (AGA)

AGA-01	(1989) A.G.A. Plastic Pipe Manual for Gas Service

AMERICAN PETROLEUM INSTITUTE (API)

API Spec 5L	(1992) Line Pipe
API Spec 6D	(1991; Supple 1) Pipeline Valves, (Gate, Plug, Ball, and Check Valves)

AMERICAN SOCIETY FOR TESTING AND MATERIALS (ASTM)

ASTM A 53	(1990b) Pipe, Steel, Black and Hot-Dipped, Zinc-Coated Welded and Seamless
ASTM A 181	(1990) Forgings, Carbon Steel, for General-Purpose Piping
ASTM D 2513	(1991a) Thermoplastic Gas Pressure Pipe, Tubing, and Fittings
ASTM D 2683	(1992) Socket-Type Polyethylene Fittings for Outside Diameter-Controlled Polyethylene Pipe and Tubing
ASTM D 3261	(1990) Butt Heat Fusion Polyethylene (PE) Plastic Fittings for Polyethylene (PE) Plastic Pipe and Tubing
ASTM D 3350	(1984) Polyethylene Plastics Pipe and Fittings Materials

AMERICAN SOCIETY OF MECHANICAL ENGINEERS (ASME)

ASME B1.20.1	(1983) Pipe Threads, General Purpose (Inch)
ASME B16.5	(1988; Errata; B16.5a) Pipe Flanges and Flanged Fittings
ASME B16.9	(1993) Factory-Made Wrought Steel Buttwelding Fittings
ASME B16.11	(1991) Forged Fittings, Socket-Welding and Threaded
ASME B16.21	(1992) Nonmetallic Flat Gaskets for Pipe Flanges

ASME B31.8 (1992) Gas Transmission and Distribution Piping Systems

CODE OF FEDERAL REGULATIONS (CFR)

CFR 49 Part 192 Transportation of Natural and Other Gas by Pipeline: Minimum Federal Safety Standards

FEDERAL SPECIFICATIONS (FS)

FS L-C-530 (Rev C) Coating, Pipe, Thermoplastic Resin

MANUFACTURERS STANDARDIZATION SOCIETY OF THE VALVE AND FITTINGS INDUSTRY (MSS)

MSS SP-25 (1993) Standard Marking System for Valves, Fittings, Flanges and Unions

MSS SP-84 (1990) Valves - Socket Welding and Threaded Ends

MILITARY SPECIFICATIONS (MS)

MS MIL-M-18294 (Rev D) Meters, Fluid Quantity Volumetric

MS MIL-T-27730 (Rev A) Tape, Antiseize, Polytetrafluoroethylene, with Dispenser

NATIONAL ASSOCIATION OF CORROSION ENGINEERS (NACE)

NACE RP0274 (1974) High Voltage Electrical Inspection of Pipeline Coatings Prior to Installation

STEEL STRUCTURES PAINTING COUNCIL (SSPC)

SSPC SP 6 (1991) Commercial Blast Cleaning

UNDERWRITERS LABORATORIES (UL)

UL-06 (1992; Supple) Gas and Oil Equipment Directory

1.2 GENERAL REQUIREMENTS

1.2.1 Jointing Polyethylene Piping

Piping shall be joined by performance qualified joiners using qualified procedures in accordance with AGA-01. Manufacturer's prequalified joining procedures shall be used. All joints shall be inspected by an inspector qualified in the joining procedures being used and in accordance with AGA-01. Joiners and inspectors shall be qualified at the job site by a person who has been trained and certified by the manufacturer of the pipe, to train and qualify joiners and inspectors in each joining procedure to be used on the job. Training will include use of equipment, explanation of the procedure, and successfully making joints which pass tests specified in AGA-01. The Contracting Officer shall be notified at least 24 hours in advance of the date to qualify joiners and inspectors.

1.2.2 Standard Products

Materials and equipment shall be the standard products of a manufacturer regularly engaged in the manufacture of the products and shall essentially duplicate items that have been in satisfactory use for at least 2 years prior to bid opening. Asbestos or products containing asbestos shall not be used. Equipment shall be supported by a service organization that is, in the opinion of the Contracting Officer, reasonably convenient to the site. Valves, flanges, and fittings shall be marked in accordance with MSS SP-25.

1.2.3 Verification of Dimensions

The Contractor shall become familiar with all details of the work, verify all dimensions in the field, and shall advise the Contracting Officer of any discrepancy before performing the work.

1.2.4 Handling

Pipe and components shall be handled carefully to ensure a sound, undamaged condition. Particular care shall be taken not to damage pipe coating. No pipe or material of any kind shall be placed inside another pipe or fitting after the coating has been applied, except as specified in paragraph INSTALLATION. Plastic pipe shall be handled in conformance with AGA-01.

1.3 SUBMITTALS

Government approval is required for submittals with a "GA" designation; submittals having an "FIO" designation are for information only. The following shall be submitted in accordance with Section 01300 SUBMITTAL DESCRIPTIONS:

SD-04 Drawings

Pipe, Fittings, and Associated Materials; FIO.

Drawings shall contain complete schematic and piping diagrams and any other details required to demonstrate that the system has been coordinated and will properly function as a unit. Drawings shall show proposed layout and anchorage of the system and appurtenances, and equipment relationship to other parts of the work including clearances for maintenance and operation.

SD-07 Schedules

Equipment and Materials; FIO.

A complete list of equipment and materials, including manufacturer's descriptive and technical literature, performance charts and curves, catalog cuts, and installation instructions, including, but not limited to the following:

a. Dielectric Unions and Flange Kits.

b. Meters.

c. Pressure Reducing Valves.

d. Regulators.

Notification; FIO.

Notification of the Contractor's schedule for making connections to existing gas lines, at least 10 days in advance.

SD-08 Statements

Welding Steel Piping; FIO.

A copy of qualified welding procedures along with a list of names and identification symbols of performance qualified welders and welding operators.

Jointing Polyethylene Piping; GA.

A copy of qualified jointing procedures, training procedures, qualifications of trainer, and training test results for joiners and inspectors.

Connection and Abandonment Procedures; GA.

A copy of procedures for gas line tie in, hot taps, abandonment/removal or demolition, purging, and plugging as applicable in accordance with ASME B31.8.

Training; FIO.

A copy of each inspector's and jointer's training certificate with respective test results.

PART 2 PRODUCTS

2.1 PIPE, FITTINGS, AND ASSOCIATED MATERIALS

2.1.1 Steel Pipe

Steel pipe shall conform to ASTM A 53, Grade A or B, Type E or S, Schedule 40; or API Spec 5L seamless or electric resistance welded, Schedule 40; black, as specified in ASME B31.8. Furnace buttwelded pipe may be used in sizes 1-1/2 inches and smaller.

2.1.2 Small Fittings

Fittings 1-1/2 inches and smaller shall conform to ASME B16.11.

2.1.3 Fittings, 2 Inches and Larger

Pipe flanges and flanged fittings including bolts, nuts, and bolt patterns shall be in accordance with ASME B16.5, Class 150. Buttweld fittings shall be in accordance with ASME B16.9. Weld neck flanges shall be used.

2.1.4 Steel Forged Branch Connections

Connections shall conform to ASTM A 181, Class 60, carbon steel.

2.1.5 Flange Gaskets

Gaskets shall be non-asbestos compressed material in accordance with ASME B16.21, 1/16 inch minimum thickness, full face or

self-centering flat ring type. The gaskets shall contain aramid fibers bonded with nitrile butadiene rubber (NBR), or glass fibers bonded with polytetrafluorethylene, suitable for maximum 600 degrees F service and meeting applicable requirements of ASME B31.8.

2.1.6 Pipe Threads

Pipe threads shall conform to ASME B1.20.1.

2.1.7 Polyethylene Pipe, Tubing, Fittings and Joints

Polyethylene pipe, tubing, fittings and joints shall conform to ASTM D 3350 and ASTM D 2513, pipe designations PE 2406 and PE 3408, rated SDR 11.5 or less, as specified in ASME B31.8. Pipe sections shall be marked as required by ASTM D 2513. Butt fittings shall conform to ASTM D 3261 and socket fittings shall conform to ASTM D 2683. Fittings shall match the service rating of the pipe.

2.1.8 Sealants for Steel Pipe Threaded Joints

2.1.8.1 Sealing Compound

Joint sealing compound shall be as listed in UL-06, Class 20 or less.

2.1.8.2 Tape

Polytetrafluoroethylene tape shall conform to MS MIL-T-27730.

2.1.9 Identification

Pipe flow markings and metal tags for each valve, meter, and regulator shall be provided as required by the Contracting Officer.

2.1.10 Insulating Joint Materials

Insulating joint materials shall be provided between flanged or threaded metallic pipe systems where shown to isolate galvanic or electrolytic action.

2.1.10.1 Threaded Joints

Joints for threaded pipe shall be steel body nut type dielectric type unions with insulating gaskets.

2.1.10.2 Flanged Joints

Joints for flanged pipe shall consist of full face sandwich-type flange insulating gasket of the dielectric type, insulating sleeves for flange bolts and insulating washers for flange nuts.

2.1.11 Gas Transition Fittings

Gas transition fittings shall be manufactured steel fittings approved for jointing steel and polyethylene or fiberglass pipe. Approved transition fittings are those that conform to AGA-01 requirements for transition fittings.

2.2 VALVES

Valves shall be suitable for shutoff or isolation service and shall conform to the following:

2.2.1 Steel Valves

Steel valves 1-1/2 inches and smaller installed underground shall conform to MSS SP-84, carbon steel, socket weld ends, with square wrench operator adaptor. Steel valves 1-1/2 inches and smaller installed aboveground shall conform to MSS SP-84, carbon steel, socket weld or threaded ends with handwheel or wrench operator. Steel valves 2 Inches and larger installed underground shall conform to API Spec 6D, carbon steel, buttweld ends, Class 150 with square wrench operator adaptor. Steel valves 2 inches and larger installed aboveground shall conform to API Spec 6D, carbon steel, buttweld or flanged ends, Class 150 with handwheel or wrench operator.

2.3 PRESSURE REGULATORS

Regulators shall have ferrous bodies, shall provide backflow and vacuum protection, and shall be designed to meet the pressure, load and other service conditions.

2.3.1 Service Line Regulators

Pressure regulators for individual service lines shall have ferrous bodies. Regulator shall be capable of reducing distribution line pressure to pressures required for users. Regulators shall be provided where gas will be distributed at pressures in excess of 10 inches of water column. Pressure relief shall be set at a lower pressure than would cause unsafe operation of any connected user. Regulator shall have single port with orifice diameter no greater than that recommended by the manufacturer for the maximum gas pressure at the regulator inlet. Regulator valve vent shall be of resilient materials designed to withstand flow conditions when pressed against the valve port. Regulator shall be capable of regulating downstream pressure within limits of accuracy and shall be capable of limiting the buildup of pressure under no-flow conditions to 50 percent or less of the discharge pressure maintained under flow conditions. Regulator shall have a self contained service regulator. Regulator pipe connections shall not exceed 2-inch size.

2.4 METERS

Meters shall conform to MS MIL-M-18294, Style B without resettable counter. Meters shall be pedestal mounted and be provided with a strainer immediately upstream. Meters shall be provided with over-pressure protection as specified in ASME B31.8 and frost protection. Meters shall be suitable for accurately measuring and handling gas at pressures, temperatures, and flow rates indicated. Meters shall have a pulse switch initiator capable of operating up to speeds of 500 pulses per minute with no false pulses and shall require no field adjustments. Initiators shall provide the maximum number of pulses up to 500 per minute that is obtainable from the manufacturer. It shall not provide less than one pulse per 100 cubic feet of gas.

2.5 PROTECTIVE COVERING MATERIALS

2.5.1 Thermoplastic Resin Coating System

Continuously extruded polyethylene and adhesive coating system materials shall conform to FS L-C-530, Part (3).

PART 3 EXECUTION

3.1 EXCAVATION AND BACKFILLING

Earthwork shall be as specified in Section 02222 EXCAVATION, TRENCHING, AND BACKFILLING FOR UTILITIES SYSTEMS.

3.2 GAS MAINS

Pipe for gas mains shall be polyethylene. Polyethylene mains shall not be installed aboveground.

3.3 SERVICE LINES

Service lines shall be constructed of materials specified for gas mains and shall extend from a gas main to and including the point of delivery within 5 feet of the building. The point of delivery is the meter set assembly. The service lines shall be connected to the gas mains through service tees, with end of run plugged.

Where indicated, service line shall be provided with an isolation valve of the same size as the service line. The service lines shall be as short and as straight as practicable between the point of delivery and the gas main and shall not be bent or curved laterally unless necessary to avoid obstructions or otherwise permitted. Service lines shall be laid with as few joints as practicable using standard lengths of pipe. Shorter lengths shall be used only for closures. Polyethylene service lines shall not be installed aboveground except as permitted in ASME B31.8.

3.4 WORKMANSHIP AND DEFECTS

Pipe, tubing, and fittings shall be clear and free of cutting burrs and defects in structure or threading and shall be thoroughly brushed and blown free of chips and scale. Defective pipe, tubing, or fittings shall be replaced and shall not be repaired.

3.5 PROTECTIVE COVERING

3.5.1 Protective Covering for Underground Steel Pipe

Except as otherwise specified, protective coverings shall be applied mechanically in a factory or field plant especially equipped for the purpose. Valves and fittings that cannot be coated and wrapped mechanically shall have the protective covering applied by hand, preferably at the plant that applies the covering to the pipe. Joints shall be coated and wrapped by hand. Hand coating and wrapping shall be done in a manner and with materials that will produce a covering equal in thickness to that of the covering applied mechanically.

3.5.1.1 Thermoplastic Resin Coating System

The coating system shall conform to FS L-C-530, Part (3). The exterior of the pipe shall be cleaned to a commercial grade blast cleaning finish in accordance with SSPC SP 6. Adhesive compound shall be applied to the pipe. Immediately after the adhesive is applied, a seamless tube of polyethylene shall be extruded over the adhesive to produce a bonded seamless coating. The nominal thickness of the pipe coating system shall be 10 mils (plus or minus 10 percent) of adhesive and 40 mils (plus or minus 10 percent) of polyethylene for pipes up to 16 inches in diameter. For pipes 18 inches and larger in diameter, the pipe coating system thickness shall be 10 mils (plus or minus 10 percent) adhesive and 60 mils (plus or minus 10 percent) polyethylene. Joint coating and field repair material shall be applied as recommended by the coating manufacturer and shall be one of the following:

a. Heat shrinkable polyethylene sleeves.

b. Polyvinyl chloride pressure-sensitive adhesive tape.

c. High density polyethylene/bituminous rubber compound tape.

The coating system shall be inspected for holes, voids, cracks, and other damage during installation.

3.5.1.2 Inspection of Pipe Coatings

Any damage to the protective covering during transit and handling shall be repaired before installation. After field coating and wrapping has been applied, the entire pipe shall be inspected by an electric holiday detector with impressed current set at a value in accordance with NACE RP0274 using a full-ring, spring-type coil electrode. The holiday detector shall be equipped with a bell, buzzer, or other type of audible signal which sounds when a holiday is detected. All holidays in the protective covering shall be repaired immediately upon detection. The Contracting Officer reserves the right to inspect and determine the suitability of the detector. Labor, materials, and equipment necessary for conducting the inspection shall be furnished by the Contractor.

3.5.2 Protective Covering for Aboveground Piping Systems

Finish painting shall conform to the applicable paragraphs of Section 09900 PAINTING, GENERAL and as follows:

3.5.2.1 Ferrous Surfaces

Shop primed surfaces shall be touched up with ferrous metal primer. Surfaces that have not been shop primed shall be solvent-cleaned. Surfaces that contain loose rust, loose mill scale, and other foreign substances shall be mechanically cleaned by power wire brushing or commercial sandblasted and primed with ferrous metal primer or vinyl type wash coat. Primed surface shall be finished with two coats of exterior oil paint or vinyl paint.

3.5.2.2 Nonferrous Surfaces

Nonferrous surfaces shall not be painted.

3.6 INSTALLATION

Gas distribution system and equipment shall be installed in conformance with the manufacturer's recommendations and applicable sections of ASME B31.8, AGA-01 and CFR 49 Part 192. Abandoning existing gas piping shall be done in accordance with ASME B31.8. Pipe shall be cut without damaging the pipe. Unless otherwise authorized, cutting shall be done by an approved type of mechanical cutter. Wheel cutters shall be used where practicable. On steel pipe 6 inches and larger, an approved gas-cutting-and-beveling machine may be used. Cutting of plastic pipe shall be in accordance with AGA-01. Valve installation in plastic pipe shall be designed to protect the plastic pipe against excessive torsional or shearing loads when the valve is operated and from other stresses which may be exerted through the valve or valve box.

3.6.1 Installing Pipe Underground

Gas mains and service lines shall be graded as indicated. Joints in steel pipe shall be welded except as otherwise permitted for installation of valves. Mains shall have 24-inch minimum cover, service lines shall have 18-inch minimum cover, and both mains and service lines shall be placed on firmly compacted select material for the full length. Trench shall be excavated below pipe grade, bedded with bank sand, and compacted to provide full-length bearing. Laying the pipe on blocks to produce uniform grade will

not be permitted. The pipe shall be clean inside before it is lowered into the trench and shall be kept free of water, soil, and all other foreign matter that might damage or obstruct the operation of the valves, regulators, meters, or other equipment. When work is not in progress, open ends of pipe or fittings shall be securely closed by expandable plugs or other suitable means. Minor changes in line or gradient of pipe that can be accomplished through the natural flexibility of the pipe material without producing permanent deformation and without overstressing joints may be made when approved. Changes in line or gradient that exceed the limitations specified shall be made with fittings. When polyethylene piping is installed underground, foil backed magnetic tape shall be placed above the pipe to permit locating with a magnetic detector. After laying of pipe and testing, trench shall be backfilled in accordance with Section 02222 Excavation, Trenching and Backfilling for Utility Systems.

3.6.2 Installing Pipe Aboveground

Aboveground piping shall be protected against dirt and other foreign matter as specified for underground piping. Joints in steel pipe shall be welded; however joints in pipe 1-1/2 inches in diameter and smaller may be threaded; joints may also be threaded to accommodate the installation of valves. Flanges shall be of the weld neck type to match wall thickness of pipe.

3.7 PIPE JOINTS

Pipe joints shall be designed and installed to effectively sustain the longitudinal pullout forces caused by the contraction of piping or superimposed loads.

3.7.1 Threaded Steel Joints

Threaded joints in steel pipe shall have tapered threads evenly cut and shall be made with UL approved graphite joint sealing compound for gas service or polytetrafluoroethylene tape applied to the male threads only. Caulking of threaded joints to stop or prevent leaks will not be permitted.

3.7.2 Welded Steel Joints

Gas pipe weldments shall be as indicated. Changes in direction of piping shall be made with welding fittings only; mitering or notching pipe to form elbows and tees or other similar type construction will not be permitted. Branch connection may be made with either welding tees or forged branch outlet fittings. Branch outlet fittings shall be forged, flared for improvement of flow where attached to the run, and reinforced against external strains. Beveling, alignment, heat treatment, and inspection of weld shall conform to ASME B31.8. Weld defects shall be removed and repairs made to the weld, or the weld joints shall be entirely removed and rewelded. After filler metal has been removed from its original package, it shall be protected or stored so that its characteristics or welding properties are not affected adversely. Electrodes that have been wetted or have lost any of their coating shall not be used.

3.7.3 Polyethylene Pipe Jointing Procedures

Jointing procedures shall conform to AGA-01. Indiscriminate heat fusion joining of plastic pipe or fittings made from different polyethylene resins by classification or by manufacturer shall be avoided if other alternative joining procedures are available. If heat fusion joining of dissimilar polyethylenes is required, special procedures are required. The method of heat fusion joining dissimilar polyethylene resins shall be tested in accordance with paragraph TESTS, subparagraph Destructive Tests of Plastic Pipe Joints.

3.7.4 Connections Between Metallic and Plastic Piping

Connections shall be made only outside, underground, and with approved transition fittings.

3.8 VALVE BOXES

Valve boxes of cast iron not less than 3/16 inch thick shall be installed at each underground valve except where concrete or other type of housing is indicated. Valve boxes shall be provided with locking covers that require a special wrench for removal. Wrench shall be furnished for each box. The word "gas" shall be cast in the box cover. When the valve is located in a roadway, the valve box shall be protected by a suitable concrete slab at least 3 square feet. When in a sidewalk, the top of the box shall be in a concrete slab 2 feet square and set flush with the sidewalk. Boxes shall be adjustable extension type with screw or slide-type adjustments. Valve boxes shall be separately supported, not resting on the pipe, so that no traffic loads can be transmitted to the pipe.

3.9 PRESSURE REGULATOR INSTALLATION

3.9.1 Service Line Regulators

A shutoff valve, meter set assembly, and service regulator shall be installed on the service line outside the building, 18 inches above the ground on the riser. An insulating joint shall be installed on the inlet side of the meter set assembly and service regulator and shall be constructed to prevent flow of electrical current. A 3/8-inch tapped fitting equipped with a plug shall be provided on both sides of the service regulator for installation of pressure gauges for adjusting the regulator. All service regulator vents and relief vents shall terminate in the outside air in rain and insect resistant fittings. The open end of the vent shall be located where gas can escape freely into the atmosphere, away from any openings into the building and above areas subject to flooding.

3.10 METER INSTALLATION

Meters shall be installed in accordance with ASME B31.8. Permanent gas meters shall be installed with provisions for isolation and removal for calibration and maintenance, and shall be suitable for operation in conjunction with an energy monitoring and control system.

3.11 CONNECTIONS TO EXISTING LINES

Connections between new work and existing gas lines, where required, shall be made in accordance with ASME B31.8 using proper

fittings to suit the actual conditions. When connections are made by tapping into a gas main, the connecting fittings shall be the same size as the pipe being connected.

3.11.1 Connection to Government Owned/Operated Gas Lines

The Contractor shall provide connections to the existing gas lines in accordance with approved procedures. Deactivation of any portion of the existing system shall only be done at the valve location shown on the drawings. Reactivation of any existing gas lines will only be done by the Government. The Contractor's Connection and Abandonment Plan shall be submitted and approved prior to making any connections to existing gas lines. This plan must include the Operating Agency's required procedures which may be obtained from the Contracting Officer. The Contractor shall notify the Contracting Officer, in writing, 10 days before connections to existing lines are to be made.

a. If facilities are abandoned in place, they shall be physically disconnected from the piping system. The open ends of all abandoned facilities shall be purged, capped, plugged or otherwise effectively sealed. Abandonment shall not be completed until it has been determined that the volume of gas or liquid hydrocarbons contained within the abandoned section poses no potential hazard. Air or inert gas may be used for purging, or the facility may be filled with water or other inert material. If air is used for purging, the Contractor shall ensure that a combustible mixture is not present after purging.

3.12 CATHODIC PROTECTION

Cathodic protection shall be provided for all metallic gas piping installed underground and shall be installed as specified in Section 16640 CATHODIC PROTECTION SYSTEM (SACRIFICIAL ANODE).

3.13 TESTS

3.13.1 Destructive Tests of Plastic Pipe Joints

Each day, prior to making polyethylene heat fusion joints or fiberglass adhesive joints, a joint of each size and type to be installed that day shall be made by each person performing joining of plastic pipe that day and destructively tested. At least 3 longitudinal straps shall be cut from each joint. Each strap shall be visually examined, shall not contain voids or discontinuities on the cut surfaces of the joint area, and shall be deformed by bending, torque, or impact, and if failure occurs, it must not initiate in the joint area. If a joint fails the visual or deformation test, the qualified joiner who made that joint shall not make further field joints in plastic pipe on this job until that person has been retrained and requalified. The results of the destructive tests shall be recorded to include the date and time of the tests, size and type of the joints, ambient conditions, fusion iron temperature and names of inspectors and joiners.

3.13.2 Pressure and Leak Tests

The system of gas mains and service lines shall be tested after construction and before being placed in service using air as the test medium. The normal operating pressure for the system is 25

psig. The test pressure is 50 psig. Prior to testing the system, the interior shall be blown out, cleaned and cleared of all foreign materials. All meters, regulators, and controls shall be removed before blowing out and cleaning and reinstalled after clearing of all foreign materials. Testing of gas mains and service lines shall be done with due regard for the safety of employees and the public during the test. Persons not working on the test operations shall be kept out of the testing area while testing is proceeding. The test shall be made on the system as a whole or on sections that can be isolated. Joints in sections shall be tested prior to backfilling when trenches must be backfilled before the completion of other pipeline sections. The test shall continue for at least 24 hours from the time of the initial readings to the final readings of pressure and temperature. The initial test readings of the instrument shall not be made for at least 1 hour after the pipe has been subjected to the full test pressure, and neither the initial nor final readings shall be made at times of rapid changes in atmospheric conditions. The temperatures shall be representative of the actual trench conditions. There shall be no indication of reduction of pressure during the test after corrections have been made for changes in atmospheric conditions in conformity with the relationship T(1)P(2)T(2)P(1), in which T and P denote absolute temperature and pressure, respectively, and the numbers denote initial and final readings. During the test, the entire system shall be completely isolated from all compressors and other sources of air pressure. Each joint shall be tested by means of soap and water or an equivalent nonflammable solution prior to backfilling or concealing any work. The testing instruments shall be approved by the Contracting Officer. All labor, materials and equipment for conducting the tests shall be furnished by the Contractor and shall be subject to inspection at all times during the tests. The Contractor shall maintain safety precautions for air pressure testing at all times during the tests.

-- End of Section --

SECTION 02711

FOUNDATION DRAINAGE SYSTEM

PART 1 GENERAL

1.1 REFERENCES

The publications listed below form a part of this specification to the extent referenced. The publications are referred to in the text by basic designation only.

AMERICAN SOCIETY FOR TESTING AND MATERIALS (ASTM)

ASTM C 33	(1992a) Concrete Aggregates
ASTM D 3034	(1989) Type PSM Poly(Vinyl Chloride) (PVC) Sewer Pipe and Fittings
ASTM D 3212	(1992) Joints for Drain and Sewer Plastic Pipes Using Flexible Elastomeric Seals
ASTM F 758	(1990) Smooth-Wall Poly(Vinyl Chloride) (PVC) Plastic Underdrain Systems for Highway, Airport, and Similar Drainage
ASTM F 949	(1991a) Poly(Vinyl Chloride) (PVC) Corrugated Sewer Pipe With a Smooth Interior and Fittings

1.2 SUBMITTALS

Government approval is required for submittals with a "GA" designation; submittals having an "FIO" designation are for information only. The following shall be submitted in accordance with Section 01300 SUBMITTAL DESCRIPTIONS:

SD-13 Certificates

Materials; FIO.

Certifications from the manufacturers attesting that materials meet specification requirements.

1.3 DELIVERY, STORAGE AND HANDLING

Materials placed in storage shall be stored with protection from the weather, humidity and temperature variations, dirt and dust, or other contaminants. Plastic pipe shall not be exposed to direct sunlight for more than 6 months from time of manufacturer to installation.

PART 2 PRODUCTS

2.1 MATERIALS

Pipe for foundation drainage system shall be of the type and size indicated. Appropriate transitions, adapters, or joint details must be used where pipes of different types or materials are connected.

2.1.1 Plastic Pipe

Plastic pipe shall contain ultraviolet inhibitor to provide protection from exposure to direct sunlight.

2.1.1.1 Polyvinyl Chloride (PVC) Pipe

ASTM F 758, Type PS 46, ASTM D 3034, or ASTM F 949 with a minimum pipe stiffness of 46 psi.

2.1.1.2 Circular Perforations in Plastic Pipe

Circular holes shall be cleanly cut, not more than 5/16 inch or less than 3/16 inch in diameter, and arranged in rows parallel to the longitudinal axis of the pipe. Perforations shall be approximately 3 inches apart, center-to-center, along rows. The rows shall be approximately 1-1/2 inches apart and arranged in a staggered pattern so that all perforations lie at the midpoint between perforations in adjacent rows. The rows shall be spaced over not more than 155 degrees of circumference. The spigot or tongue end of the pipe shall not be perforated for a length equal to the depth of the socket and perforations shall continue at uniform spacing over the entire length of the pipe. Manufacturer's standard perforated pipe which essentially meets these requirements may be used with prior approval of the Contracting Officer.

2.1.1.3 Slotted Perforations in Plastic Pipe

Circumferential slots shall be cleanly cut so as not to restrict the inflow of water and uniformly spaced along the length and circumference of the tubing. Width of slots shall not exceed 1/8 inch or be less than 1/32 inch. The length of individual slots shall not exceed 1-1/4 inches on 3 inch diameter tubing; 10 percent of the tubing inside nominal circumference on 4 to 8 inch diameter tubing; and 2-1/2 inches on 10 inch diameter tubing. Rows of slots shall be symmetrically spaced so that they are fully contained in quadrants of the pipe. Slots shall be centered in the valleys of the corrugations of profile wall pipe. The water inlet area shall be a minimum of 0.5 square inch per linear foot of tubing. Manufacturer's standard perforated pipe which essentially meets these requirements may be used with prior approval of the Contracting Officer.

2.1.2 Fittings

Fittings shall be of compatible materials for pipe, of corresponding weight and quality, and as specified herein.

2.1.3 Cleanouts

Cleanout pipe and fittings shall be cast-iron soil pipe. Each cleanout shall have a brass ferrule and a cast-brass screw-jointed plug with socket or raised head for wrench.

2.1.4 Bedding and Pervious Backfill for Foundation Drains

Bedding and pervious backfill shall be coarse aggregate conforming to ASTM C 33, size number 4 inch.

2.1.5 Protective Covering for Pervious Backfill

Protective covering shall be fiberglass mat of lime borosilicate glass fibers. Fibers shall be 8 to 12 microns in average diameter, 2 to 4 inches in length, and bonded with phenol formaldehyde resin. Mat shall be roll type, nonperforated, water permeable, with thickness between 1/4 and 1/2 inch and density of 3/4 pcf.

PART 3 EXECUTION

3.1 GENERAL REQUIREMENTS

3.1.1 Extent

Foundation drainage shall be furnished and installed as a complete system as shown.

3.1.2 Outlet Connections

Foundation pipe shall be terminated in manhole where shown. Pipe shall terminate with a flanged neoprene duckbill or pinch type check valve. Valve shall be constructed to open under 2-inches of water head.

3.1.3 Drainage Lines

Drainage lines shall be constructed of perforated pipe.

3.1.4 Outlet Lines

Outlet lines shall be constructed of closed-joint nonperforated, nonporous pipe.

3.2 INSTALLATION

3.2.1 Trenching and Excavation

Required trenching and excavation shall be in accordance with Section 02221 EXCAVATION, FILLING, AND BACKFILLING FOR BUILDINGS for piping within 5 feet of the building and Section 02222 EXCAVATION, TRENCHING, AND BACKFILLING FOR UTILITIES SYSTEMS for piping outside the 5-foot line. Trenches shall be kept dry during installation of drainage system. Changes in direction of drain lines shall be made with 1/8 bends. Wye fittings shall be used at intersections.

3.2.2 Bedding

Graded bedding, minimum 6 inches in depth, shall be placed in the bottom of trench for its full width and length and compacted as specified prior to laying of foundation drain pipe. Each section shall rest firmly upon the bedding, through the entire length, with recesses formed for bell joints. Except for recesses for bell joints, the bedding shall fully support the lower quadrant of the pipe.

3.2.3 Pipe Laying

Drain lines shall be laid to true grades and alignment with a continuous fall in the direction of flow. Bells of pipe sections

shall face upgrade. Interior of pipe shall be cleaned thoroughly before being laid. When drain lines are left open for connection to discharge lines, the open ends shall be temporarily closed and the location marked with wooden stakes. Perforated pipe shall be laid with perforations facing down. Any length that has had its grade or joints disturbed shall be removed and relaid at no additional cost to the Government. Tubing and piping with physical imperfections shall not be installed.

3.2.4 Jointing

3.2.4.1 Perforated Pipes

Perforated types of drain pipes shall be laid with closed joints.

3.2.4.2 PVC Pipe

PVC pipe joints shall be in accordance with ASTM D 3034, ASTM D 3212, or ASTM F 949.

3.2.5 Outlet Lines

The outlet end of drain lines shall be grouted into the existing manhole where shown.

3.2.6 Backfilling

After joints and connections have been inspected and approved, the specified pervious backfill material shall be placed where shown. When placing the backfill, care shall be taken to prevent displacement of or injury to the pipe. A protective covering, as specified, shall be placed over the pervious backfill for the full width of the trench before regular backfill is placed. Backfill shall be compacted and tested as specified in Section 02221 EXCAVATION, FILLING AND BACKFILLING FOR BUILDINGS for piping within 5-feet of the building and Section 02222 EXCAVATION, TRENCHING AND BACKFILLING FOR UTILITIES SYSTEMS for piping outside the 5-foot line.

3.2.7 Cleanouts

Cleanouts shall be provided in locations indicated.

-- End of Section --

SECTION 02720

STORM-DRAINAGE SYSTEM

PART 1 GENERAL

1.1 REFERENCES

The publications listed below form a part of this specification to the extent referenced. The publications are referred to in the text by basic designation only.

AMERICAN ASSOCIATION OF STATE HIGHWAY AND TRANSPORTATION OFFICIALS (AASHTO)

AASHTO M 198	(1994) Joints for Circular Concrete Sewer and Culvert Pipe Using Flexible Watertight Gaskets

AMERICAN SOCIETY FOR TESTING AND MATERIALS (ASTM)

ASTM C 76	(1995) Reinforced Concrete Culvert, Storm Drain, and Sewer Pipe
ASTM D 1556	(1990) Density and Unit Weight of Soil in Place by the Sand-Cone Method
ASTM D 1557	(1991) Laboratory Compaction Characteristics of Soil Using Modified Effort (56,000 ft-lbf/cu. ft. (2,700 kN-m/cu.m.))
ASTM D 2167	(1994) Density and Unit Weight of Soil in Place by the Rubber Balloon Method
ASTM D 2922	(1991) Density of Soil and Soil-Aggregate in Place by Nuclear Methods (Shallow Depth)
ASTM D 3017	(1988; R 1993) Water Content of Soil and Rock in Place by Nuclear Methods (Shallow Depth)

1.2 SUBMITTALS

Government approval is required for submittals with a "GA" designation; submittals having an "FIO" designation are for information only. The following shall be submitted in accordance with Section 01330 SUBMITTAL PROCEDURES:

SD-06 Instructions

Placing Pipe; FIO.

Printed copies of the manufacturer's recommendations for installation procedures of the material being placed, prior to installation.

1.3 DELIVERY, STORAGE, AND HANDLING

1.3.1 Delivery and Storage

Materials delivered to site shall be inspected for damage, unloaded, and stored with a minimum of handling. Materials shall

not be stored directly on the ground. The inside of pipes and fittings shall be kept free of dirt and debris.

1.3.2 Handling

Materials shall be handled in such a manner as to ensure delivery to the trench in sound, undamaged condition. Pipe shall be carried to the trench, not dragged.

PART 2 PRODUCTS

2.1 PIPE FOR CULVERTS AND STORM DRAINS

Pipe for culverts and storm drains shall be of the sizes indicated and shall conform to the requirements specified.

2.1.1 Concrete Pipe

ASTM C 76, Class III.

2.2 DRAINAGE STRUCTURES

2.2.1 Flared End Sections

Sections shall be of a standard design fabricated for the type of pipe specified for the project.

2.3 MISCELLANEOUS MATERIALS

2.3.1 Joints

2.3.1.1 Flexible Watertight Joints

a. Materials: Flexible watertight joints shall be made with plastic or rubber-type gaskets for concrete pipe. The design of joints and the physical requirements for plastic gaskets shall conform to AASHTO M 198.

PART 3 EXECUTION

3.1 EXCAVATION FOR PIPE CULVERTS, STORM DRAINS, AND DRAINAGE STRUCTURES

Excavation of trenches and for appurtenances and backfilling for culverts and storm drains shall be in accordance with the applicable portions of Section 02222 EXCAVATION, TRENCHING, AND BACKFILLING FOR UTILITIES SYSTEMS and Section 02225 EARTHWORK FOR ROADWAYS, RAILROADS, AND AIRFIELDS and the requirements specified below.

3.1.1 Trenching

The width of trenches at any point below the top of the pipe shall be not greater than the outside diameter of the pipe plus 24 inches to permit satisfactory jointing and thorough tamping of the bedding material under and around the pipe. Sheeting and bracing where required shall be placed within the trench width as specified. Care shall be taken not to overexcavate. Where trench widths are exceeded, redesign with a resultant increase in cost of stronger pipe or special installation procedures shall be necessary. Cost of this redesign and increased cost of pipe or

installation shall be borne by the Contractor without additional cost to the Government.

3.1.2 Removal of Rock

Rock in either ledge or boulder formation shall be replaced with suitable materials to provide a compacted earth cushion having a thickness between unremoved rock and the pipe of at least 8 inches or 1/2 inch for each foot of fill over the top of the pipe, whichever is greater, but not more than three-fourths the nominal diameter of the pipe. Where bell-and-spigot pipe is used, the cushion shall be maintained under the bell as well as under the straight portion of the pipe. Rock excavation shall be as specified and defined in Section 02222 EXCAVATION, TRENCHING, AND BACKFILLING FOR UTILITIES SYSTEMS.

3.1.3 Removal of Unstable Material

Where wet or otherwise unstable soil incapable of properly supporting the pipe, as determined by the Contracting Officer, is unexpectedly encountered in the bottom of a trench, such material shall be removed to the depth required and replaced to the proper grade with select granular material, compacted as provided in paragraph BACKFILLING. When removal of unstable material is due to the fault or neglect of the Contractor in his performance of shoring and sheeting, water removal, or other specified requirements, such removal and replacement shall be performed at no additional cost to the government.

3.2 BEDDING

The bedding surface for the pipe shall provide a firm foundation of uniform density throughout the entire length of the pipe.

3.2.1 Concrete Pipe

Concrete pipe shall be bedded carefully in the bedding foundation accurately shaped and rounded to conform to the lowest one-fourth of the outside portion of circular pipe or to the lower curved portion of pipe arch for the entire length of the pipe. When necessary, the bedding shall be tamped. Bell holes and depressions for joints shall be only of such length, depth, and width as required for properly making the particular type of joint.

3.3 PLACING PIPE

Each pipe shall be carefully examined before being laid, and defective or damaged pipe shall not be used. Pipelines shall be laid to the grades and alignment indicated. Proper facilities shall be provided for lowering sections of pipe into trenches. Under no circumstances shall pipe be laid in water, and no pipe shall be laid when trench conditions or weather are unsuitable for such work. Diversion of drainage or dewatering of trenches during construction shall be provided as necessary. All pipe in place shall be inspected before backfilling, and those pipes damaged during placement shall be removed and replaced.

3.3.1 Concrete Pipe

Laying shall proceed upgrade with spigot ends of bell-and-spigot pipe and tongue ends of tongue-and-groove pipe pointing in the direction of the flow.

3.4 JOINTS

3.4.1 Concrete Pipe

3.4.1.1 Cement-Mortar Bell-and-Spigot Joint

The first pipe shall be bedded to the established gradeline, with the bell end placed upstream. The interior surface of the bell shall be carefully cleaned with a wet brush and the lower portion of the bell filled with mortar to such depth as to bring inner surfaces of abutting pipes flush and even. The spigot end of each subsequent pipe shall be cleaned with a wet brush and uniformly matched into a bell so that sections are closely fitted. After each section is laid, the remainder of the joint shall be filled with mortar, and a bead shall be formed around the outside of the joint with sufficient additional mortar. If mortar is not sufficiently stiff to prevent appreciable slump before setting, the outside of the joint shall be wrapped or bandaged with cheesecloth to hold mortar in place.

3.4.1.2 Cement-Mortar Oakum Joint for Bell-and-Spigot Pipe

A closely twisted gasket shall be made of jute or oakum of the diameter required to support the spigot end of the pipe at the proper grade and to make the joint concentric. Joint packing shall be in one piece of sufficient length to pass around the pipe and lap at top. This gasket shall be thoroughly saturated with neat cement grout. The bell of the pipe shall be thoroughly cleaned with a wet brush, and the gasket shall be laid in the bell for the lower third of the circumference and covered with mortar. The spigot of the pipe shall be thoroughly cleaned with a wet brush, inserted in the bell, and carefully driven home. A small amount of mortar shall be inserted in the annular space for the upper two-thirds of the circumference. The gasket then shall be lapped at the top of the pipe and driven home in the annular space with a caulking tool. The remainder of the annular space then shall be filled completely with mortar and beveled at an angle of approximately 45 degrees with the outside of the bell. If mortar is not sufficiently stiff to prevent appreciable slump before setting, the outside of the joint thus made shall be wrapped with cheesecloth. Placing of this type of joint shall be kept at least five joints behind laying operations.

3.4.1.3 Cement-Mortar Diaper Joint for Bell-and-Spigot Pipe

The pipe shall be centered so that the annular space is uniform. The annular space shall be caulked with jute or oakum. Before caulking, the inside of the bell and the outside of the spigot shall be cleaned.

a. Diaper Bands: Diaper bands shall consist of heavy cloth fabric to hold grout in place at joints and shall be cut in such lengths that they will extend one-eighth of the circumference of pipe above the spring line on one side of the pipe and up to the spring line on the other side of the pipe. Longitudinal edges of

fabric bands shall be rolled and stitched around two pieces of wire. Width of fabric bands shall be such that after fabric has been securely stitched around both edges on wires, the wires will be uniformly spaced not less than 8 inches apart. Wires shall be cut into lengths to pass around pipe with sufficient extra length for the ends to be twisted at top of pipe to hold the band securely in place; bands shall be accurately centered around lower portion of joint.

b. Grout: Grout shall be poured between band and pipe from only the high side of band, until grout rises to the top of band at the spring line of pipe, or as nearly so as possible, on the opposite side of pipe, to ensure a thorough sealing of joint around the portion of pipe covered by the band. Silt, slush, water, or polluted mortar grout forced up on the lower side shall be carefully forced out by pouring and removed.

c. Remainder of Joint: The remaining unfilled upper portion of the joint shall then be filled with mortar and a bead formed around the outside of this upper portion of the joint with a sufficient amount of additional mortar. The diaper shall be left in place. Placing of this type of joint shall be kept at least five joints behind actual laying of pipe. No backfilling around joints shall be done until joints have been fully inspected and approved.

3.4.1.4 Cement-Mortar Tongue-and-Groove Joint

The first pipe shall be bedded carefully to the established gradeline with the groove upstream. A shallow excavation shall be made underneath the pipe at the joint and filled with mortar to provide a bed for the pipe. The grooved end of the first pipe shall be carefully cleaned with a wet brush, and a layer of soft mortar applied to the lower half of the groove. The tongue of the second pipe shall be cleaned carefully with a wet brush; while in horizontal position, a layer of soft mortar shall be applied to the upper half of the tongue. The tongue end of the second pipe then shall be inserted in the grooved end of the first pipe until mortar is squeezed out on interior and exterior surfaces. Sufficient mortar shall be used to fill the joint completely and to form a bead on the outside.

3.4.1.5 Cement-Mortar Diaper Joint for Tongue-and-Groove Pipe

The joint shall be of the type described for cement-mortar tongue-and-groove joint in this paragraph, except that the shallow excavation directly beneath the joint shall not be filled with mortar until after a gauze or cheesecloth band dipped in cement mortar has been wrapped around the outside of the joint. The cement-mortar bead at the joint shall be at least 1/2 inch, thick and the width of the diaper band shall be at least 8 inches. The diaper shall be left in place. Placing of this type of joint shall be kept at least five joints behind the actual laying of the pipe. No backfilling around the joints shall be done until the joints have been fully inspected and approved.

3.4.1.6 Plastic Sealing Compound Joints for Tongue-and-Grooved Pipe

Sealing compounds shall follow the recommendation of the particular manufacturer in regard to special installation requirements. Surfaces to receive lubricants, primers, or

adhesives shall be dry and clean. Sealing compounds shall be affixed to the pipe not more than 3 hours prior to installation of the pipe, and shall be protected from the sun, blowing dust, and other deleterious agents at all times. Sealing compounds shall be inspected before installation of the pipe, and any loose or improperly affixed sealing compound shall be removed and replaced. The pipe shall be aligned with the previously installed pipe, and the joint pulled together. If, while making the joint with mastic-type sealant, a slight protrusion of the material is not visible along the entire inner and outer circumference of the joint when the joint is pulled up, the pipe shall be removed and the joint remade. After the joint is made, all inner protrusions will be cut off flush with the inner surface of the pipe. If nonmastic-type sealant material is used, the "Squeeze-Out" requirement above shall be waived.

3.4.1.7 Flexible Watertight Joints

Gaskets and jointing materials shall be as recommended by the particular manufacturer in regard to use of lubricants, cements, adhesives, and other special installation requirements. Surfaces to receive lubricants, cements, or adhesives shall be clean and dry. Gaskets and jointing materials shall be affixed to the pipe not more than 24 hours prior to the installation of the pipe, and shall be protected from the sun, blowing dust, and other deleterious agents at all times. Gaskets and jointing materials shall be inspected before installing the pipe; any loose or improperly affixed gaskets and jointing materials shall be removed and replaced. The pipe shall be aligned with the previously installed pipe, and the joint pushed home. If, while the joint is being made the gasket becomes visibly dislocated the pipe shall be removed and the joint remade.

3.5 DRAINAGE STRUCTURES

3.5.1 End Sections

Construction shall be as indicated.

3.6 BACKFILLING

3.6.1 Backfilling Pipe in Trenches

After the pipe has been properly bedded, selected material from excavation or borrow, at a moisture content that will facilitate compaction, shall be placed along both sides of pipe in layers not exceeding 6 inches in compacted depth. The backfill shall be brought up evenly on both sides of pipe for the full length of pipe. Care shall be taken to ensure thorough compaction of the fill under the haunches of the pipe. Each layer shall be thoroughly compacted with mechanical tampers or rammers. This method of filling and compacting shall continue until the fill has reached an elevation of at least 12 inches above the top of the pipe. The remainder of the trench shall be backfilled and compacted by spreading and rolling or compacted by mechanical rammers or tampers in layers not exceeding 8 inches. Tests for density will be made as necessary to ensure conformance to the compaction requirements specified elsewhere in this paragraph. Where it is necessary in the opinion of the Contracting Officer, any sheeting or portions of bracing used shall be left in place

and the contract will be adjusted accordingly. Untreated sheeting shall not be left in place beneath structures or pavements.

3.6.2 Backfilling Pipe in Fill Sections

For pipe placed in fill sections, backfill material and the placement and compaction procedures shall be as specified elsewhere in this paragraph. The fill material shall be uniformly spread in layers longitudinally on both sides of the pipe, not exceeding 6 inches~in compacted depth, and shall be compacted by rolling parallel with pipe or by mechanical tamping or ramming. Prior to commencing normal filling operations, the crown width of the fill at a height of 12 inches above the top of the pipe shall extend a distance of not less than twice the outside pipe diameter on each side of the pipe or 12 feet, whichever is less. After the backfill has reached at least 12 inches above the top of the pipe, the remainder of the fill shall be placed and thoroughly compacted in layers not exceeding 8 inches.

3.6.3 Movement of Construction Machinery

In compacting by rolling or operating heavy equipment parallel with the pipe, displacement of or injury to the pipe shall be avoided. Movement of construction machinery over a culvert or storm drain at any stage of construction shall be at the Contractor's risk. Any damaged pipe shall be repaired or replaced.

3.6.4 Compaction

3.6.4.1 General

Cohesionless materials include gravels, gravel-sand mixtures, sands, and gravelly sands. Cohesive materials include clayey and silty gravels, gravel-silt mixtures, clayey and silty sands, sand-clay mixtures, clays, silts, and very fine sands. When results of compaction tests for moisture-density relations are recorded on graphs, cohesionless soils will show straight lines or reverse-shaped moisture-density curves, and cohesive soils will show normal moisture-density curves.

3.6.4.2 Minimum Density

Backfill over and around the pipe and backfill around and adjacent to drainage structures shall be compacted at the approved moisture content to the following applicable minimum density (densities) which will be determined as specified in this paragraph.

a. Under parking areas, and similar-use pavements including adjacent shoulder areas, the density shall be not less than 90 percent of maximum density for cohesive material and 95 percent of maximum density for cohesionless material, up to the elevation where requirements for pavement subgrade materials and compaction shall control.

b. Under unpaved or turfed traffic areas, density shall not be less than 90 percent of maximum density for cohesive material and 95 percent of maximum density for cohesionless material.

c. Under nontraffic areas, density shall be not less than that of the surrounding material.

3.6.5 Determination of Density

Testing shall be the responsibility of the Contractor and performed at no additional cost to the Government. Testing shall be performed by an approved commercial testing laboratory or by the Contractor subject to approval. Tests shall be performed in sufficient number to ensure that specified density is being obtained. Laboratory tests for moisture-density relations shall be made in accordance with ASTM D 1557 except that mechanical tampers may be used provided the results are correlated with those obtained with the specified hand tamper. Field density tests shall be determined in accordance with ASTM D 2167 or ASTM D 2922. When ASTM D 2922 is used, the calibration curves shall be checked and adjusted, if necessary, using the sand cone method as described in paragraph Calibration of the referenced publications. ASTM D 2922 results in a wet unit weight of soil and when using this method ASTM D 3017 shall be used to determine the moisture content of the soil. The calibration curves furnished with the moisture gauges shall be checked along with density calibration checks as described in ASTM D 3017 or ASTM D 2922. Test results shall be furnished the Contracting Officer. The calibration checks of both the density and moisture gauges shall be made at the beginning of a job, on each different type of material encountered, and at the following intervals. Each 5th ASTM D 2922 test (nuclear) shall be checked by an ASTM D 1556 (sand cone) at the same location. Each 5th ASTM D 3017 test (nuclear) shall be checked by an ASTM D 2216 test (oven) at the same location. Copies of calibration curves, results of calibration tests, and field and laboratory density tests shall be furnished to the Contracting Officer. Trenches improperly compacted shall be reopened to the depth directed, then refilled and compacted to the density specified at no additional cost to the Government.

-- End of Section --

SECTION 02730

SANITARY SEWERS

PART 1 GENERAL

1.1 REFERENCES

The publications listed below form a part of this specification to the extent referenced. The publications are referred to in the text by basic designation only.

AMERICAN SOCIETY FOR TESTING AND MATERIALS (ASTM)

ASTM A 74	(1994) Cast Iron Soil Pipe and Fittings
ASTM C 425	(1995) Compression Joints for Vitrified Clay Pipe and Fittings
ASTM C 564	(1995) Rubber Gaskets for Cast Iron Soil Pipe and Fittings
ASTM C 700	(1995) Vitrified Clay Pipe, Extra Strength, Standard Strength, and Perforated
ASTM C 828	(1990) Low-Pressure Air Test of Vitrified Clay Pipe Lines

AMERICAN WATER WORKS ASSOCIATION (AWWA)

AWWA C105	(1988) Polyethylene Encasement for Ductile-Iron Piping for Water and Other Liquids
AWWA C110	(1993) Ductile-Iron and Gray-Iron Fittings, 3 In. Through 48 In. (75 mm through 1200 mm), for Water and Other Liquids
AWWA C111	(1990) Rubber-Gasket Joints for Ductile-Iron Pressure Pipe and Fittings
AWWA C151	(1991) Ductile-Iron Pipe, Centrifugally Cast, for Water or Other Liquids

1.2 GENERAL REQUIREMENTS

The construction required herein shall include appurtenant structures and building sewers to points of connection with the building drains 5 feet outside the building to which the sewer system is to be connected. The Contractor shall replace damaged material and redo unacceptable work at no additional cost to the Government. Excavation and backfilling is specified in Section 02222 EXCAVATION, TRENCHING, AND BACKFILLING FOR UTILITIES SYSTEMS. Backfilling shall be accomplished after inspection by the Contracting Officer. Before, during, and after installation, plastic pipe and fittings shall be protected from any environment that would result in damage or deterioration to the material. The Contractor shall have a copy of the manufacturer's instructions available at the construction site at all times and shall follow these instructions unless directed otherwise by the Contracting Officer. Solvents, solvent compounds, lubricants, elastomeric

gaskets, and any similar materials required to install the plastic pipe shall be stored in accordance with the manufacturer's recommendation and shall be discarded if the storage period exceeds the recommended shelf life. Solvents in use shall be discarded when the recommended pot life is exceeded.

PART 2 PRODUCTS

2.1 PIPE

Pipe shall conform to the respective specifications and other requirements specified below.

2.1.1 Ductile Iron Pipe

Pipe shall conform to AWWA C151 unless otherwise shown or specified.

2.1.2 Cast Iron Soil Pipe

ASTM A 74, Class SV. When installed underground, pipe shall be encased with 8 mil thick polyethylene in accordance with AWWA C105.

2.1.3 Clay Pipe

ASTM C 700 Extra strength.

2.2 FITTINGS

Fittings shall be compatible with the pipe supplied and shall have a strength not less than that of the pipe. Fittings shall conform to the respective specifications and other requirements specified below.

2.2.1 Ductile Iron Pipe

Mechanical fittings shall conform to AWWA C110, rated for 150 psi. Push-on fittings shall conform to AWWA C110 and AWWA C111, rated for 150 psi.

2.2.2 Cast Iron Soil Pipe

ASTM A 74.

2.2.3 Clay Pipe

ASTM C 700.

2.3 JOINTS

Joints installation shall comply with the manufacturer's instructions.

2.3.1 Ductile Iron Pipe

Push-on joints shall conform to AWWA C111. Mechanical joints shall conform to AWWA C111 as modified by AWWA C151.

2.3.2 Cast Iron Soil Pipe

Rubber gaskets for compression joints shall conform to ASTM C 564. Packing material for caulked joints shall be twisted jute or oakum, tarred type, or asphalt-saturated cellulose-fiber. Joints for acid resisting cast iron soil pipe shall be made with acid resistant non-asbestos packing. The packing shall contain no material which would affect adhesion of the joint sealing material to the pipe. Lead shall be suitable for caulking of joints.

2.3.3 Clay Pipe

Compression joints shall conform to ASTM C 425.

2.4 BRANCH CONNECTIONS

Branch connections shall be made by use of regular fittings.

PART 3 EXECUTION

3.1 INSTALLATION

3.1.1 Adjacent Facilities

3.1.1.1 Water Lines

Where the location of the sewer is not clearly defined by dimensions on the drawings, the sewer shall not be closer horizontally than 10 feet to a water-supply main or service line, except that where the bottom of the water pipe will be at least 12 inches above the top of the sewer pipe, the horizontal spacing may be a minimum of 6 feet. Where gravity-flow sewers cross above water lines, the sewer pipe for a distance of 10 feet on each side of the crossing shall be acceptable pressure pipe with no joint closer horizontally than 3 feet to the crossing.

3.1.1.2 Structures

Where sewer pipe is to be installed within 3 feet of an existing or proposed building or structural foundation such as a retaining wall, control tower footing, water tank footing, or any similar structure, the sewer pipe shall be sleeved. Care shall be exercised and proper precautions taken during installation of the sewer pipe and sleeve to assure that there will be no damage to such structures and no settlement or movement of foundations or footing.

3.1.2 Pipe Laying

a. Pipe shall be protected during handling against impact shocks and free fall and the pipe interior shall be free of extraneous material.

b. Pipe laying shall proceed upgrade with the spigot ends of bell-and-spigot pipe and tongue ends of tongue-and-groove pipe pointing in the direction of the flow. Each pipe shall be laid accurately to the line and grade shown on the drawings. Pipe shall be laid and centered so that the sewer has a uniform invert. As the work progresses, the interior of the sewer shall be cleared of all superfluous materials.

c. Before making pipe joints all surfaces of the portions of the pipe to be joined shall be clean and dry. Lubricants shall be used as recommended by the pipe manufacturer. The joints shall then be placed, fitted, joined, and adjusted to obtain the degree of water tightness required.

3.1.2.1 Caulked Joints

The packing material shall be well packed into the annular space to prevent the entrance of lead into the pipe. The remainder of the space shall be filled with molten lead that is hot enough to show a rapid change in color when stirred. Scum shall be removed before pouring. The lead shall be caulked to form a tight joint without overstraining the bell and shall have a minimum depth of 1 inch after caulking.

3.1.2.2 Trenches

Trenches shall be kept free of water and as dry as possible during bedding, laying, and jointing and for as long a period as required. When work is not in progress, open ends of pipe and fittings shall be satisfactorily closed so that no trench water or other material will enter the pipe or fittings.

3.1.2.3 Backfill

As soon as possible after the joint is made, sufficient backfill material shall be placed along the pipe to prevent pipe movement off line or grade. Plastic pipe shall be completely covered to prevent damage from ultraviolet light.

3.1.2.4 Width of Trench

If the maximum width of the trench at the top of the pipe, as specified in Section 02222 EXCAVATION, TRENCHING, AND BACKFILLING FOR UTILITIES SYSTEMS, is exceeded for any reason other than by direction, the Contractor shall install at no additional cost to the Government such concrete cradling, pipe encasement, or other bedding required to support the added load of the backfill.

3.1.2.5 Joints

Joints between different pipe materials shall be made as specified, using approved jointing materials.

3.1.2.6 Handling and Storage

Pipe, fittings and joint material shall be handled and stored in accordance with the manufacturer's recommendations.

3.1.3 Leakage Tests

Lines shall be tested for leakage by low pressure air testing, infiltration tests or exfiltration tests, as appropriate. Low pressure air testing for vitrified clay pipes shall be as prescribed in ASTM C 828. Low pressure air testing procedures for other pipe materials shall use the pressures and testing times prescribed in ASTM C 828 and ASTM C 924, after consultation with the pipe manufacturer. Prior to infiltration or exfiltration tests the trench shall be backfilled up to at least the lower half of the pipe. If required, sufficient additional backfill shall be

placed to prevent pipe movement during testing, leaving the joints uncovered to permit inspection. Visible leaks encountered shall be corrected regardless of leakage test results. When the water table is 2 feet or more above the top of the pipe at the upper end of the pipeline section to be tested, infiltration shall be measured using a suitable weir or other device acceptable to the Contracting Officer. When the Contracting Officer determines that infiltration cannot be properly tested, an exfiltration test shall be made by filling the line to be tested with water so that a head of at least 2 feet is provided above both the water table and the top of the pipe at the upper end of the pipeline to be tested. The filled line shall be allowed to stand until the pipe has reached its maximum absorption, but not less than 4 hours. After absorption, the head shall be re-established. The amount of water required to maintain this water level during a 2-hour test period shall be measured. Leakage as measured by either the infiltration test or exfiltration test shall not exceed 0.2 gallons per inch diameter per 100 feet of pipeline per hour. When leakage exceeds the maximum amount specified, satisfactory correction shall be made and retesting accomplished. Testing, correction, and retesting shall be made at no additional cost to the Government.

3.2 WYE BRANCHES

Wye branches shall be installed where sewer connections are indicated or where directed. Cutting into piping for connections shall not be done except in special approved cases. When the connecting pipe cannot be adequately supported on undisturbed earth or tamped backfill, the pipe shall be encased in concrete backfill or supported on a concrete cradle as directed. Concrete required because of conditions resulting from faulty construction methods or negligence by the Contractor shall be installed at no additional cost to the Government. The installation of wye branches in an existing sewer shall be made by a method which does not damage the integrity of the existing sewer. One acceptable method consists of removing one pipe section, breaking off the upper half of the bell of the next lower section and half of the running bell of wye section. After placing the new section, it shall be rotated so that the broken half of the bell will be at the bottom. The two joints shall then be made with joint packing and cement mortar.

3.3 BUILDING CONNECTIONS

Building connections shall include the lines to and connection with the building waste drainage piping at a point approximately 5 feet outside the building, unless otherwise indicated. Where building drain piping is not installed, the Contractor shall terminate the building connections approximately 5 feet from the site of the building at a point and in a manner designated.

3.4 CLEANOUTS AND OTHER APPURTENANCES

Cleanouts and other appurtenances shall be installed where shown on the drawings or as directed by the Contracting Officer, and shall conform to the detail of the drawings.

-- End of Section --

SECTION 02754

CONCRETE PAVEMENTS FOR SMALL PROJECTS

PART 1 GENERAL

1.1 REFERENCES

The publications listed below form a part of this specification to the extent referenced. The publications are referred to in the text by basic designation only.

ACI INTERNATIONAL (ACI)

ACI 305R(1991)	Hot Weather Concreting

AMERICAN SOCIETY FOR TESTING AND MATERIALS (ASTM)

ASTM D 1752	(1984; R 1992) Preformed Sponge Rubber and Cork Expansion Joint Fillers for Concrete Paving and Structural Construction

ARMY CORPS OF ENGINEERS (COE)

COE CRD-C 540	(1971; R 1981) Standard Specification for Nonbituminous Inserts for Contraction Joints in Portland Cement Concrete Airfield Pavements, Sawable Type
COE CRD-C 572	(1974) Corps of Engineers Specifications for Polyvinylchloride Waterstop

NATIONAL READY-MIXED CONCRETE ASSOCIATION (NRMCA)

NRMCA CPMB 100	(1990) Concrete Plant Standards

1.2 SYSTEM DESCRIPTION

The pavement will be accepted on the basis of tests made by the Government and by the Contractor or its suppliers, as specified herein. The Government may, at its discretion, make check tests to validate the results of the Contractor's testing. Concrete samples shall be taken by the Contractor at the placement to determine the slump, air content, and strength of the concrete. Test cylinders shall be made for determining conformance with the strength requirements of these specifications and, when required, for determining the time at which pavements may be placed into service. All air content measurements shall be determined in accordance with ASTM C 231. All slump tests shall be made in accordance with ASTM C 143. All test cylinders shall be 6 by 12 inch cylinders and shall be fabricated in accordance with ASTM C 192, using only steel molds, cured in accordance with ASTM C 31, and tested in accordance with ASTM C 39. A strength test shall be the average of the strengths of two cylinders made from the same sample of concrete and tested at 28 days. The Contractor shall furnish all materials, labor, and facilities required for molding, curing, testing, and protecting test specimens at the site and in the laboratory.

Sampling, testing, and mixture proportioning shall be performed by a commercial Testing Laboratory, conforming with ASTM C 1077. The individuals who sample and test concrete and concrete constituents shall be certified as American Concrete Institute (ACI) Concrete Field Testing Technicians, Grade I. The individuals who perform the inspection of concrete shall be certified as ACI Concrete Construction Inspector, Level II. All mix design, weekly quality control reports, smoothness reports, and project certification reports shall be signed by a Registered Engineer.

1.4.2 Surface Testing

Surface testing for surface smoothness and plan grade shall be performed as indicated below by the Testing Laboratory. The measurements shall be properly referenced in accordance with paving lane identification and stationing, and a report given to the Government within 24 hours after measurement is made. A final report of surface testing, signed by a Registered Engineer, containing all surface measurements and a description of all actions taken to correct deficiencies, shall be provided to the Government upon conclusion of surface testing.

1.4.2.1 Surface Smoothness Requirements

The finished surfaces of the pavements shall have no abrupt change of 1/8 inch or more, and all pavements shall be within the tolerances specified in Table 1 when checked with the straightedge.

TABLE 1
STRAIGHTEDGE SURFACE SMOOTHNESS--PAVEMENTS

Pavement Category	Direction of Testing	Tolerances inches
Parking Areas	Longitudinal	1/4
	Transverse	1/4

1.4.2.2 Surface Smoothness Testing Method

The surface of the pavement shall be tested with the straightedge to identify all surface irregularities exceeding the tolerances specified above. The entire area of the pavement shall be tested in both a longitudinal and a transverse direction on parallel lines approximately 15 feet apart. The straightedge shall be held in contact with the surface and moved ahead one-half the length of the straightedge for each successive measurement. The amount of surface irregularity shall be determined by placing the straightedge on the pavement surface and allowing it to rest upon the two highest spots covered by its length and measuring the maximum gap between the straightedge and the pavement surface, in the area between these two high points.

1.4.3 Plan Grade Testing and Conformance

The finished surface of the pavements shall conform, within the tolerances shown in Table 1, to the lines, grades, and cross sections shown. The finished surface of new abutting pavements shall coincide at their juncture. The surfaces shall vary not

more than 0.06 foot above or below the plan grade line or elevation indicated. Each pavement shall be checked by the Contractor for conformance with plan grade requirements by running lines of levels at intervals to determine the elevation at each joint intersection.

1.5 PRECONSTRUCTION TESTING OF MATERIALS

The Contractor shall not be entitled to any additional payment or extension of time because of delays caused by sampling and testing additional sources, or samples, necessitated by failure of any samples. Aggregates shall be sampled and tested by the Test Laboratory and shall be representative of the materials to be used for the project. Test results, signed by a Registered Engineer, shall be submitted 45 days before commencing paving. No aggregate shall be used unless test results show that it meets all requirements of these specifications, including compliance with ASTM C 33 and deleterious materials limitations.

1.6 SUBMITTALS

Government approval is required for submittals with a "GA" designation; submittals having an "FIO" designation are for information only. The following shall be submitted in accordance with Section 01330 SUBMITTAL PROCEDURES:

SD-01 Data

Equipment; FIO.

Manufacturer's literature on the concrete plant; mixing equipment; hauling equipment; placing and finishing, and curing equipment; at least 7 days prior to start of paving.

SD-07 Schedules

Paving; FIO.

Paving Schedules at least 7 days prior to start of paving.

SD-08 Statements

Mixture Proportions; GA.

The report of the Contractor's mixture proportioning studies showing the proportions of all ingredients and supporting information on aggregate and other materials that will be used in the manufacture of concrete, at least 14 days prior to commencing concrete placing operations.

1.7 EQUIPMENT

1.7.1 Batching and Mixing

The batching plant shall conform to NRMCA CPMB 100, the equipment requirements in ASTM C 94, and as specified. Water shall not be weighed or measured cumulatively with another ingredient. All concrete materials batching shall meet ASTM C 94 requirements. Mixers shall be truck mixers. Batching, mixers, mixing time, permitted reduction of mixing time, and concrete uniformity shall

meet the requirements of ASTM C 94, and shall be documented in the initial weekly QC Report.

1.7.2 Transporting Equipment

Transporting equipment shall be in conformance with ASTM C 94 and as specified herein. Concrete shall be transported to the paving site in rear-dump trucks, in truck mixers designed with extra large blading and rear opening specifically for low slump concrete, or in agitators.

1.7.3 Delivery Equipment

When concrete transport equipment cannot operate on the paving lane, side-delivery transport equipment consisting of self-propelled moving conveyors shall be used to deliver concrete from the transport equipment and discharge it in front of the paver. Front-end loaders, dozers, or similar equipment shall not be used to distribute the concrete.

1.7.4 Paver-Finisher

The paver-finisher shall be a heavy-duty, self-propelled machine designed specifically for paving and finishing high quality pavement. The paver-finisher shall spread, consolidate, and shape the plastic concrete to the desired cross section in one pass. The paver-finisher shall be equipped with a full width "knock-down" auger, capable of operating in both directions, which will evenly spread the fresh concrete in front of the screed or extrusion plate. Immersion vibrators shall be gang mounted at the front of the paver on a frame equipped with suitable controls so that all vibrators can be operated at any desired depth within the slab or completely withdrawn from the concrete. The vibrators shall be automatically controlled so that they will be immediately stopped as forward motion of the paver ceases. The spacing of the immersion vibrators across the paving lane shall be as necessary to properly consolidate the concrete, but the clear distance between vibrators shall not exceed 30 inches, and the outside vibrators shall not exceed 12 inches from the edge of the lane. The paver-finisher shall be equipped with a transversely oscillating screed or an extrusion plate to shape, compact, and smooth the surface.

1.7.4.1 Paver-Finisher with Fixed Forms

The paver-finisher shall be equipped with wheels designed to ride the forms, keep it aligned with the forms, and to spread the preventing deformation of the forms.

1.7.4.2 Other Types of Finishing Equipment

Bridge deck finishers shall be used for pavements 10 inches or less in thickness. Clary screeds or other rotating tube floats will not be allowed on the project.

1.7.5 Curing Equipment

Equipment for curing is specified in paragraph CURING.

1.7.6 Texturing Equipment

Texturing equipment shall be as specified below.

1.7.6.1 Fabric Drag

A fabric drag shall consist of a piece of fabric material as wide as the lane width securely attached to a separate wheel mounted frame spanning the paving lane or to one of the other similar pieces of equipment. The material shall be wide enough to provide 12 to 18 inches dragging flat on the pavement surface. The fabric material shall be clean, reasonably new burlap, kept clean and saturated during use.

1.7.6.2 Deep Texturing Equipment

Texturing equipment shall consist of a stiff bristled broom forming a drag at least 4 feet long. This drag shall be mounted in a wheeled frame spanning the paving lane and constructed to mechanically pull the drag in a straight line across the paving lane perpendicular to the centerline.

1.7.7 Sawing Equipment

Equipment for sawing joints and for other similar sawing of concrete shall be standard diamond-tip-bladed concrete saws mounted on a wheeled chassis.

1.7.8 Straightedge

The Contractor shall furnish and maintain at the job site one 12 foot straightedge for testing concrete surface smoothness. The straightedge shall be constructed of aluminum or magnesium alloy and shall have blades of box or box-girder cross section with flat bottom, adequately reinforced to insure rigidity and accuracy. Straightedges shall have handles for operation on the pavement.

PART 2 PRODUCTS

2.1 CEMENTITIOUS MATERIALS

Cementitious materials shall be portland cement and pozzolan and shall conform to appropriate specifications listed below.

2.1.1 Portland Cement

Portland cement shall conform to ASTM C 150 Type II, low-alkali.

2.1.2 Pozzolan (Fly Ash)

Fly ash shall conform to ASTM C 618 Class F, including all the supplementary optional physical requirements.

2.2 AGGREGATES

Aggregates shall consist of clean, hard, uncoated particles meeting the requirements of ASTM C 33, including deleterious materials, abrasion loss and soundness requirements of ASTM C 33, and other requirements specified herein.

2.2.1 Coarse Aggregate

Coarse aggregate shall consist of crushed gravel, crushed stone, or a combination thereof. The nominal maximum size of the coarse aggregate shall be 1-1/2 inches. When the nominal maximum size is greater than 1 inch, the aggregates shall be furnished in two ASTM C 33 size groups, No. 67 and No. 4. The amount of deleterious material in each size of coarse aggregate shall not exceed the limits shown in ASTM C 33 Class 1N, 4M or 4S, depending on the weathering region, and the following limits:

a. Lightweight particles 1.0 max. percent by mass (ASTM C 123).

b. Other soft particles 2.0 max. percent by mass (COE CRD-C 130).

c. Total of all deleterious 5.0 max. percent by mass (substances listed in ASTM C 33 and above, exclusive of material finer than No. 200 sieve).

d. The separation medium for lightweight particles shall have a density of Sp. Gr. of 2.0.

2.2.2 Fine Aggregate

Fine aggregate shall consist of natural sand, manufactured sand, or a combination of the two, and shall be composed of clean, hard, durable particles. All fine aggregate shall be composed of clean, hard, durable particles meeting the requirements of ASTM C 33 and the requirements herein. The amount of deleterious material in the fine aggregate shall not exceed the limits in ASTM C 33 and shall not exceed the following limits:

a. Lightweight particles (ASTM C 123) 1.0 percent max. by mass using a medium with a density of Sp. Gr. of 2.0.

b. The total of all deleterious material types, listed in ASTM C 33 and above, shall not exceed 3.0 percent of the mass of the fine aggregate.

2.3 CHEMICAL ADMIXTURES

Air-entraining admixture shall conform to ASTM C 260. An accelerator shall be used only when specified in paragraph SPECIFIED CONCRETE STRENGTH AND OTHER PROPERTIES and shall not be used to reduce the amount of cementitious material used. Accelerator shall conform to ASTM C 494 Type C. Calcium chloride and admixtures containing calcium chloride shall not be used. A water-reducing or retarding admixture shall meet the requirements of ASTM C 494. Type G or H admixtures are not allowed.

2.4 CURING MATERIALS

Membrane forming curing compound shall be a white pigmented compound conforming to COE CRD-C 300. Burlap shall be new or shall be clean material never used for anything other than curing concrete.

2.5 WATER

Water for mixing and curing shall be clean, potable, and free of injurious amounts of oil, acid, salt, or alkali.

2.6 JOINT MATERIALS

2.6.1 Expansion Joint Material

Expansion joint filler shall be a preformed material conforming to ASTM D 1751. Expansion joint filler shall be 3/4 inch thick.

2.7 REINFORCING

2.7.1 General

Reinforcing bars shall conform to ASTM A 615 Grade 60. Reinforcement shall be free from loose, flaky rust, loose scale, oil, grease, mud, or other coatings that might reduce the bond with concrete.

2.8 DOWELS AND TIE BARS

2.8.1 Dowels

Dowels shall be single piece, plain (non-deformed) steel bars conforming to ASTM A 615 Grade 60 or higher. Dowels shall be free of loose, flaky rust and loose scale and shall be clean and straight.

2.8.2 Tie Bars

Tie bars shall be deformed steel bars conforming to ASTM A 615 Grade 60. Grade 60 or higher shall not be used for bars that are bent and straightened during construction.

2.9 EPOXY RESIN

All epoxy-resin materials shall be two-component materials conforming to ASTM C 881, Class as appropriate for each application temperature to be encountered; except, that in addition, the materials shall meet the following requirements:

a. Material for use for embedding dowels and anchor bolts shall be Type IV, Grade 3.

b. Material for use as patching for complete filling of spalls, wide cracks, and other voids and for use in preparing epoxy resin mortar shall be Type III, Grade as approved.

c. Material for injecting cracks shall be Type IV, Grade 1.

d. Material for bonding freshly mixed portland cement concrete, mortar, or freshly mixed epoxy resin concrete to hardened concrete shall be Type V, Grade as approved.

2.10 SPECIFIED CONCRETE STRENGTH AND OTHER PROPERTIES

Specified compressive strength, f'c, for concrete is 3,500 psi at 28 days. Maximum allowable water-cementitious material ratio is 0.50. The water-cementitious material ratio is based on absolute

volume equivalency, where the ratio is determined using the weight of cement for a cement only mix, or using the total volume of cement plus pozzolan converted to an equivalent weight of cement by the absolute volume equivalency method described in ACI 211.1. The concrete shall be air-entrained with a total air content of 6 plus or minus 1 percent. The maximum allowable slump of the concrete shall be 3 inches for pavement constructed with fixed forms. The strength of the concrete will be considered satisfactory so long as the average of all sets of three consecutive test results equals or exceeds the specified compressive strength f'c and no individual test result falls below the specified strength f'c by more than 500 psi. Additional analysis or testing, including taking cores and/or load tests may be required at the Contractor's expense when the strength of the concrete in the structure is considered potentially deficient.

2.11 MIXTURE PROPORTIONS

2.11.1 Composition Concrete

Composition concrete shall be composed of cementitious material, water, fine and coarse aggregates, and admixtures. Fly ash, if used, shall be used only at a rate between 15 and 35 percent by mass of the total cementitious material. Admixtures shall consist of air entraining admixture and may also include water-reducing admixture. High range water-reducing admixtures and admixtures to produce flowable concrete shall not be used. No substitutions shall be made in the materials used in the mixture proportions without additional tests to show that the quality of the concrete is satisfactory.

2.11.2 Concrete Mixture Proportioning Studies

Trial design batches, mixture proportioning studies, and testing shall be the responsibility of the Contractor, and shall be performed by the Test Laboratory and signed by a Registered Engineer. No concrete pavement shall be placed until the Contracting Officer has approved the Contractor's mixture proportions. All materials used in mixture proportioning studies shall be representative of those proposed for use on the project. If there is a change in materials, additional mixture design studies shall be made using the new materials. Trial mixtures having proportions, slumps, and air content suitable for the work shall be based on methodology described in ACI 211.1. At least three different water-cementitious ratios, which will produce a range of strength encompassing that required on the project, shall be used. Laboratory trial mixtures shall be proportioned for maximum permitted slump and air content. Maximum sand content shall be 40 percent of the total aggregate SSD weight. Aggregate quantities shall be based on the mass in a saturated surface dry condition.

2.11.3 Mixture Proportioning Procedure

The Contractor shall perform the following:

a. Fabricate, cure and test 6 test cylinders per age for each mixture at 7 and 28 days.

b. Using the average strength for each w/(c+p), plot the results from each of the three mixtures on separate graphs for w/(c+p) versus 28-day strength.

c. From the graphs select a w/(c+p) which will produce a mixture giving a 28-day strength equal to the required strength determined in accordance with the following paragraph.

2.11.4 Average Strength Required for Mixtures

In order to ensure meeting, during production, the strength requirements specified, the mixture proportions selected shall produce a required average strength, f'cr, exceeding the specified strength, f'c, in accordance with procedures in Chapter 3 of ACI 301, "Proportioning."

PART 3 EXECUTION

3.1 CONDITIONING OF UNDERLYING MATERIAL

Underlying material, base course, upon which concrete is to be placed shall be clean, damp, and free from debris, waste concrete or cement, frost, ice, and standing or running water. After the underlying material has been prepared for concrete placement, no equipment shall be permitted thereon.

3.2 WEATHER LIMITATIONS

3.2.1 Hot Weather Paving

The temperature of concrete shall not exceed 90 degrees F. Steel forms, dowels and reinforcing shall be cooled prior to concrete placement when steel temperatures are greater than 120 degrees F.

3.2.2 Cold Weather Paving

The ambient temperature of the air at the placing site and the temperature of surfaces to receive concrete shall be not less 40 degrees F. The temperature of the concrete when placed shall be not less than50 degrees F. Materials entering the mixer shall be free from ice, snow, or frozen lumps. Salt, chemicals or other materials shall not be incorporated in the concrete to prevent freezing. Upon written approval, chemical admixture conforming to ASTM C 494 Type C or E may be used provided it contains no calcium chloride. Calcium chloride shall not be used at any time. Covering and other means shall be provided for maintaining the concrete at a temperature of at least 50 degrees F for not less than 72 hours after placing, and at a temperature above freezing for the remainder of the curing period. Pavement damaged by freezing shall be completely removed and replaced at the Contractor's expense as specified in paragraph, REPAIR, REMOVAL, AND REPLACEMENT OF SLABS.

3.3 CONCRETE PRODUCTION

3.3.1 General Requirements

Concrete shall be deposited in front of the paver within 45 minutes from the time cement has been charged into the mixing drum, except that if the ambient temperature is above 90 degrees F, the time shall be reduced to 30 minutes. Every load of

concrete delivered to the paving site shall be accompanied by a batch ticket from the operator of the batching plant. Tickets shall show at least the mass, or volume, of all ingredients in each batch delivered, the water meter and revolution meter reading on truck mixers and the time of day. Tickets shall be delivered to the placing foreman who shall keep them on file and deliver them to the Government daily.

3.3.2 Transporting and Transfer-Spreading Operations

Non-agitating equipment shall not be used. Equipment shall be allowed to operate on the underlying material only if no damage is done to the underlying material and its degree of compaction. Any disturbance to the underlying material that does occur shall be corrected before the paver-finisher reaches the location of the disturbance and the equipment shall be replaced or procedures changed to prevent any future damage. Additional water may be added to truck mixers to bring the slump within the specified range provided the mixture water-cement ratio is not exceeded.

3.4 PAVING

Pavement shall be constructed with paving and finishing equipment utilizing fixed forms.

3.4.1 Consolidation

The paver vibrators shall be inserted into the concrete not closer to the underlying material than 2 inches. The vibrators or any tamping units in front of the paver shall be automatically controlled so that they shall be stopped immediately as forward motion ceases. Excessive vibration shall not be permitted. Concrete in small, odd-shaped slabs or in locations inaccessible to the paver mounted vibration equipment shall be vibrated with a hand-operated immersion vibrator. Vibrators shall not be used to transport or spread the concrete.

3.4.2 Operation

When the paver is operated between or adjacent to previously constructed pavement (fill-in lanes), provisions shall be made to prevent damage to the previously constructed pavement, including keeping the existing pavement surface free of any debris, and placing rubber mats beneath the paver tracks. Transversely oscillating screeds and extrusion plates shall overlap the existing pavement the minimum possible, but in no case more than 8 inches.

3.4.3 Required Results

The paver-finisher shall be operated to produce a thoroughly consolidated slab throughout, true to line and grade within specified tolerances. The paver-finishing operation shall produce a surface finish free of irregularities, tears, voids of any kind, and any other discontinuities. It shall produce only a very minimum of paste at the surface. Multiple passes of the paver-finisher shall not be permitted. The equipment and its operation shall produce a finished surface requiring no hand finishing, other than the use of cutting straightedges, except in very infrequent instances. No water, other than true fog sprays

(mist), shall be applied to the concrete surface during paving and finishing.

3.4.4 Fixed Form Paving

Forms shall be steel, except that wood forms may be used for curves having a radius of 150 feet or less, and for fillets. Forms may be built up with metal or wood, added only to the base, to provide an increase in depth of not more than 25 percent. The base width of the form shall be not less than eight-tenths of the vertical height of the form, except that forms 8 inches or less in vertical height shall have a base width not less than the vertical height of the form. Wood forms for curves and fillets shall be adequate in strength and rigidly braced. Forms shall be set on firm material cut true to grade so that each form section when placed will be firmly in contact with the underlying layer for its entire base. Forms shall not be set on blocks or on built-up spots of underlying material. Forms shall remain in place at least 12 hours after the concrete has been placed. Forms shall be removed without injuring the concrete.

3.4.5 Placing Reinforcing Steel

Reinforcement shall be positioned on suitable chairs securely fastened to the subgrade prior to concrete placement, or may be placed on an initial layer of consolidated concrete, with the subsequent layer placed within 30 minutes of the first layer placement.

3.4.6 Placing Dowels and Tie Bars

Dowels shall be installed with alignment not greater than 1/8 inch per ft. Except as otherwise specified below, location of dowels shall be within a horizontal tolerance of plus or minus 5/8 inch and a vertical tolerance of plus or minus 3/16 inch. The portion of each dowel intended to move within the concrete or expansion cap shall be painted with one coat of rust inhibiting primer paint, and then oiled just prior to placement. Dowels and tie bars in joints shall be omitted when the center of the dowel or tie bar is located within a horizontal distance from an intersecting joint equal to or less than one-fourth of the slab thickness.

3.4.6.1 Contraction Joints

Dowels in longitudinal and transverse contraction joints within the paving lane shall be held securely in place by means of rigid metal basket assemblies. The dowels shall be welded to the assembly or held firmly by mechanical locking arrangements that will prevent them from becoming distorted during paving operations. The basket assemblies shall be held securely in the proper location by means of suitable anchors.

3.4.6.2 Construction Joints-Fixed Form Paving

Installation of dowels shall be by the bonded-in-place method, supported by means of devices fastened to the forms. Installation by removing and replacing in preformed holes will not be permitted.

3.4.6.3 Dowels Installed in Hardened Concrete

Installation shall be by bonding the dowels into holes drilled into the hardened concrete. Holes approximately 1\8 inch greater in diameter than the dowels shall be drilled into the hardened concrete. Dowels shall be bonded in the drilled holes using epoxy resin injected at the back of the hole before installing the dowel and extruded to the collar during insertion of the dowel so as to completely fill the void around the dowel. Application by buttering the dowel shall not be permitted. The dowels shall be held in alignment at the collar of the hole, after insertion and before the grout hardens, by means of a suitable metal or plastic collar fitted around the dowel. The vertical alignment of the dowels shall be checked by placing the straightedge on the surface of the pavement over the top of the dowel and measuring the vertical distance between the straightedge and the beginning and ending point of the exposed part of the dowel.

3.5 FINISHING

Clary screeds, "bridge deck" finishers, or other rotating pipe or tube type equipment shall not be permitted. The sequence of machine operations shall be transverse finishing, longitudinal machine floating if used, straightedge finishing, texturing, and then edging of joints. Hand finishing shall be used only infrequently and only on isolated areas of odd slab shapes and in the event of a breakdown of the mechanical finishing equipment. Supplemental hand finishing for machine finished pavement shall be kept to an absolute minimum. Equipment to be used for supplemental hand finishing shall primarily be 10 to 12 feet cutting straightedges; only very sparing use of bull floats shall be allowed. At no time shall water be added to the surface of the slab in any way, except for fog (mist) sprays to prevent plastic shrinkage cracking.

3.5.1 Machine Finishing With Fixed Forms

The machine shall be designed to ride the forms. Machines that cause displacement of the forms shall be replaced. The machine shall make only one pass over each area of pavement. If the equipment and procedures do not produce a surface of uniform texture, true to grade, in one pass, the operation shall be immediately stopped and the equipment, mixture, and procedures adjusted as necessary.

3.5.2 Surface Correction

While the concrete is still plastic, irregularities and marks in the pavement surface shall be eliminated by means of cutting straightedges,10 to 12 feet in length. Depressions shall be filled with freshly mixed concrete, struck off, consolidated, and refinished. Projections above the required elevation shall also be struck off and refinished. Long-handled, flat "bull floats" shall be used sparingly and only as necessary to correct minor, scattered surface defects. Finishing with hand floats and trowels shall be held to the absolute minimum necessary. Joints and edges shall not be overfinished.

3.5.3 Hand Finishing

Hand finishing operations shall be used only for those unusual slabs as specified previously. Grate tampers (jitterbugs) shall not be used. As soon as placed and vibrated, the concrete shall be struck off and screeded. The surface shall be tamped with a strike-off and tamping screed, or vibratory screed. Immediately following the final tamping of the surface, the pavement shall be floated longitudinally. Long-handled, flat bull floats shall be used sparingly and only as necessary to correct surface defects. Finishing with hand floats and trowels shall be held to the absolute minimum necessary. Joints and edges shall not be overfinished. No water shall be added to the pavement during finishing operations.

3.5.4 Texturing

Before the surface sheen has disappeared and before the concrete hardens, the surface of the pavement shall be given a texture as described herein. After curing is complete, all textured surfaces shall be thoroughly power broomed to remove all debris. The concrete in areas of recesses in the pavement shall be finished to provide a surface of the same texture as the surrounding area.

3.5.4.1 Fabric-Drag Surface Finish

Surface texture shall be applied by dragging the surface of the pavement, in the direction of the concrete placement, with a moist fabric drag. The dragging shall produce a uniform finished surface having a fine sandy texture without disfiguring marks.

3.5.4.2 Edging

After texturing has been completed, the edge of the slabs along the forms shall be carefully finished with an edging tool to form a smooth rounded surface of 1/8 inch radius. No water shall be added to the surface during edging.

3.6 CURING

Concrete shall be continuously protected against loss of moisture and rapid temperature changes for at least 7 days from the completion of finishing operations. Unhardened concrete shall be protected from rain and flowing water. During hot weather with low humidity and/or wind, the Contractor shall institute measures to prevent plastic shrinkage cracks from developing. ACI 305R contains means of predicting plastic shrinkage cracking and preventative measures. Plastic shrinkage cracks that occur shall be filled by injection of epoxy resin after the concrete hardens. Plastic shrinkage cracks shall never be troweled over or filled with slurry. Curing shall be accomplished by one of the following methods.

3.6.1 Membrane Curing

A uniform coating of white-pigmented membrane-forming curing compound shall be applied to the entire exposed surface of the concrete including pavement edges as soon as the free water has disappeared from the surface after finishing. If evaporation is high and no moisture is present on the surface even though bleeding has not stopped, fog sprays shall be used to keep the

surface moist until setting of the cement occurs. Curing compound shall then be immediately applied. Curing compound shall be applied to the finished surfaces by means of a self-propelled automatic spraying machine, equipped with multiple spraying nozzles with wind shields, spanning the newly paved lane. The curing compound shall be applied at a maximum application rate of 200 square feet per gallon. The application of curing compound by hand-operated, mechanical powered pressure sprayers will be permitted only on odd widths or shapes of slabs where indicated and on concrete surfaces exposed by the removal of forms. The compound shall form a uniform, continuous, cohesive film that will not check, crack, or peel and that will be free from pinholes and other discontinuities. Areas where the curing compound develops the above defects or is damaged by heavy rainfall, sawing or other construction operations within the curing period, shall be immediately resprayed.

3.6.2 Moist Curing

Concrete to be moist-cured shall be maintained continuously wet for the entire curing period, commencing immediately after finishing. Surfaces shall be cured by ponding, by continuous sprinkling, by continuously saturated burlap or cotton mats, or by continuously saturated plastic coated burlap. Impervious sheet curing shall not be used.

3.7 JOINTS

No deviation from the jointing pattern shown on the drawings shall be made without written approval of the Design District Pavement or Geotechnical Engineer. All joints shall be straight, perpendicular to the finished grade of the pavement, and continuous from edge to edge or end to end of the pavement with no abrupt offset and no gradual deviation greater than 1/2 inch.

3.7.1 Longitudinal Construction Joints

Dowels shall be installed in the longitudinal construction joints.

3.7.2 Transverse Construction Joints

Transverse construction joints shall be installed at a planned transverse joint, at the end of each day's placing operations and when concrete placement is interrupted. Transverse construction joints shall be constructed either by utilizing headers and hand placement and finishing techniques, or by placing concrete beyond the transverse construction joint location and then saw cutting full depth and removing concrete back to the transverse construction joint location. For the latter case, dowels shall be installed using methods for dowels installed in hardened concrete described above. All transverse construction joints shall be dowelled.

3.7.3 Expansion Joints

Expansion joints shall be formed where indicated, and about any structures and features that project through or into the pavement, using preformed joint filler of the type, thickness, and width indicated, and shall extend the full slab depth. Edges of the concrete at the joint face shall be edged. The joint filler strips shall be installed to form a recess at the pavement surface

to be filled with joint sealant. Expansion joints shall be constructed with thickened edges for load transfer.

3.7.4 Contraction Joints

Transverse and longitudinal contraction joints shall be of the weakened-plane or dummy type. Longitudinal contraction joints shall be constructed by sawing a groove in the hardened concrete with a power-driven saw. Transverse contraction joints shall be constructed in conformance with requirements for sawed joints.

3.7.4.1 Sawed Joints

Sawed contraction joints shall be constructed by sawing a groove in the concrete with a 1/8 inch blade to the indicated depth. The time of initial sawing shall vary depending on existing and anticipated weather conditions and shall be such as to prevent uncontrolled cracking of the pavement. Sawing of the joints shall commence as soon as the concrete has hardened sufficiently to permit cutting the concrete without chipping, spalling, or tearing. The joints shall be sawed at the required spacing consecutively in the sequence of the concrete placement. Sawing at a given joint location shall be discontinued when a crack develops ahead of the saw cut. Immediately after the joint is sawed, the saw cut and adjacent concrete surface shall be thoroughly flushed with water until all waste from sawing is removed from the joint. The surface shall be resprayed with curing compound as soon as free water disappears. The top of the joint opening and the joint groove at exposed edges shall be tightly sealed with cord or backer rod before the concrete in the region of the joint is resprayed with curing compound.

3.7.5 Thickened Edge Joints

Underlying material in the transition area shall meet the requirements for smoothness and compaction specified for all other areas of the underlying material.

3.8 REPAIR, REMOVAL, AND REPLACEMENT OF SLABS

New pavement slabs that contain full-depth cracks shall be removed and replaced, as specified herein at no cost to the Government. Removal and replacement shall be full depth, shall be full width of the paving lane, and the limit of removal shall be from each original transverse joint . The Contracting Officer will determine whether cracks extend full depth of the pavement and may require minimum 6 inch diameter cores to be drilled on the crack to determine depth of cracking. Cores shall be drilled and the hole later filled by the Contractor with a well consolidated concrete mixture bonded to the walls of the hole with epoxy resin. Drilling of cores and refilling holes shall be at no expense to the Government. Cracks that do not extend full depth of slab shall be cleaned and then pressure injected with epoxy resin, Type IV, Grade 1. The Contractor shall ensure that the crack is not widened during epoxy resin injection. Where a full depth crack intersects the original transverse joint, the slab(s) containing the crack shall be removed and replaced, with dowels installed, as required below. Spalls along joints shall be repaired as specified.

3.8.1 Removal and Replacement of Full Slabs

Unless there are dowels present, all edges of the slab shall be sawcut full depth. If dowels, or tie bars are present along any edges, these edges shall be sawed full depth 6 inches from the edge if only keys are present, or just beyond the end of dowels or tie bars if they are present. These joints shall then be carefully sawed on the joint line to within 1 inch of the depth of the dowel or key. The main slab shall be further divided by sawing full depth, at appropriate locations, and each piece lifted out and removed. The narrow strips along keyed or doweled edges shall be carefully broken up and removed. Care shall be taken to prevent damage to the dowels, tie bars, or to concrete to remain in place. Protruding portions of dowels shall be painted and lightly oiled. The joint face below dowels shall be suitably trimmed so that there is no abrupt offset. If underbreak occurs at any point along any edge, the area shall be hand-filled with concrete, producing an even joint face from top to bottom, before replacing the removed slab. If underbreak over 4 inches deep occurs, the entire slab containing the underbreak shall be removed and replaced. Where there are no dowels, tie bars, or keys on an edge, or where they have been damaged, dowels of the size and spacing as specified for other joints in similar pavement shall be installed by epoxy grouting them into holes drilled into the existing concrete. Original damaged dowels or tie bars shall be cut off flush with the joint face. All four edges of the new slab shall thus contain dowels or tie bars. Prior to placement of new concrete, the underlying material shall be graded and recompacted, and the surfaces of all four joint faces shall be cleaned of all loose material and contaminants, and coated with a double application of membrane forming curing compound as bond breaker. Placement of concrete shall be as specified for original construction. The resulting joints around the new slab shall be prepared and sealed as specified.

3.8.2 Repairing Spalls Along Joints

Spalls along joints and cracks shall be repaired by first making a vertical saw cut at least 1 inch outside the spalled area and to a depth of at least 2 inches. Saw cuts shall be straight lines forming rectangular areas. The concrete between the saw cut and the joint, or crack, shall be chipped out to remove all unsound concrete. The cavity shall be thoroughly cleaned with high pressure water jets supplemented with compressed air to remove all loose material. Immediately before filling the cavity, a prime coat shall be applied to the dry cleaned surface of all sides and bottom of the cavity, except any joint face. The prime coat shall be applied in a thin coating and scrubbed into the surface with a stiff-bristle brush. Prime coat for portland cement repairs shall be a neat cement grout and for epoxy resin repairs shall be epoxy resin, Type III, Grade 1. The cavity shall be filled with low slump portland cement concrete or mortar, or with epoxy resin concrete or mortar. Portland cement concrete shall be used for larger spalls, those more than 1/3 cu. ft. in size after removal operations; portland cement mortar shall be used for spalls between 0.03 and 1/3 cu. ft; and epoxy resin mortar or Type III, Grade 3 epoxy resin for those spalls less than 0.03 cu. ft. in size after removal operations. Portland cement concretes and mortars shall be very low slump mixtures, proportioned, mixed, placed, tamped, and cured. If the materials and procedures are approved in writing, latex modified concrete mixtures may be used

for repairing spalls less than 1/3 cu.ft. in size.] Epoxy resin mortars shall be made with Type III, Grade 1, epoxy resin, using proportions, mixing, placing, tamping and curing procedures as recommended by the manufacturer. Any repair material on the surrounding surfaces of the existing concrete shall be removed before it hardens. Where the spalled area abuts a joint, an insert or other bond-breaking medium shall be used to prevent bond at the joint face. A reservoir for the joint sealant shall be sawed to the dimensions required for other joints. In lieu of sawing, spalls not adjacent to joints, and popouts, both less than 6 inches in maximum dimension, may be prepared by drilling a core 2 inches in diameter greater than the size of the defect, centered over the defect, and 2 inches deep or 1/2 inch into sound concrete, whichever is greater. The core hole shall be repaired as specified above for other spalls.

3.8.3 Areas Defective in Plan Grade or Smoothness

In areas not meeting the specified limits for surface smoothness and plan grade, high areas shall be reduced to attain the required smoothness and grade, except as depth is limited below. High areas shall be reduced by grinding the hardened concrete with a surface grinding machine after the concrete is 14 days or more old. The depth of grinding shall not exceed 1/4 inch. All pavement areas requiring plan grade or surface smoothness corrections in excess of the specified limits, shall be removed and replaced. All areas in which grinding has been performed will be subject to the thickness tolerances specified in paragraph Thickness. Any grinding performed on individual slabs with excessive deficiencies shall be performed at the Contractor's own decision without entitlement to additional compensation if eventual removal of the slab is required.

3.9 EXISTING CONCRETE PAVEMENT REMOVAL AND REPAIR

Existing concrete pavement shall be removed as indicated and as specified in Section 02050 DEMOLITION modified, and expanded as specified herein. Removal, repair and replacement shall be made as indicated and as specified in paragraph REPAIR, REMOVAL, AND REPLACEMENT OR SLABS.

3.10 PAVEMENT PROTECTION

The Contractor shall protect the pavement against all damage prior to final acceptance of the work. Traffic shall be excluded from the new pavement. As a construction expedient in paving intermediate lanes between newly paved pilot lanes, operation of the hauling equipment will be permitted on the new pavement after the pavement has been cured for 7 days and the joints have been sealed or otherwise protected. All new and existing pavement carrying construction traffic or equipment shall be continuously kept completely clean. Special cleaning and care shall be used where Contractor's traffic uses or crosses active airfield pavement.

3.11 TESTING AND INSPECTION FOR CONTRACTOR QUALITY CONTROL (CQC)

Paragraph ACCEPTABILITY OF WORK contains additional CQC requirements. The Contractor shall perform the inspection and tests described below and, based upon the results of these inspections and tests, shall take the action required and submit

reports as specified. When, in the opinion of the Contracting Officer, the paving operation is out of control, concrete placement shall cease.

3.11.1 Batch Plant Control

A daily report shall be prepared indicating checks made for scale accuracy with test weights, checks of batching accuracy, and corrective action taken prior to and during placement for weighing or batching, type and source of cement used, type and source of pozzolan or slag used, amount and source of admixtures used, aggregate source, the required aggregate and water masses per cubic yd, amount of water as free moisture in each size of aggregate, and the batch aggregate and water masses per cubic yd. for each class of concrete batched during each day's plant operation.

3.11.2 Concrete Mixture

a. Air Content Testing. Air content tests shall be made when test specimens are fabricated. In addition, at least two other tests for air content shall be made on randomly selected batches of each separate concrete mixture produced during each 8-hour period of paving. Whenever air content reaches specified limits, an immediate confirmatory test shall be made. If the second test also shows air content at or exceeding specified limits, an adjustment shall immediately be made in the amount of air-entraining admixture batched to bring air content within specified limits. If the next adjusted batch of concrete is not within specified limits, concrete placement shall be halted until concrete air content is within specified limits.

b. Slump Testing. Slump tests shall be made when test specimens are fabricated. Additional tests shall be made when excessive variation in workability is reported by the placing foreman or Government inspector. Whenever slump approaches the maximum limit, an adjustment shall immediately be made in the batch masses of water and fine aggregate, without exceeding the maximum w/(c+p). When a slump result exceeds the specification limit, no further concrete shall be delivered to the paving site until adjustments have been made and slump is again within the limit.

c. Temperature. The temperature of the concrete shall be measured when strength specimens are fabricated.

d. Concrete Strength Testing. Four (4) cylinders from the same batch shall be fabricated, cured and tested for compressive strength, testing two cylinders at 7-day and two cylinders at 28-day age. Control charts for strength, showing the 7-day and 28-day CQC compressive strengths, and the 28-day required compressive strength, shall be maintained and submitted with weekly CQC Reports.

3.11.3 Inspection Before Placing

Underlying materials, joint locations and types, construction joint faces, forms, reinforcing, dowels, and embedded items shall be inspected by a Registered Engineer in sufficient time prior to each paving operation in order to certify to the Contracting Officer that they are ready to receive concrete. The results of

each inspection shall be reported in writing, and the certification signed by the Registered Engineer, prior to each days' paving.

3.11.4 Paving Operations

The placing foreman shall supervise all placing and paving operations, shall determine that the correct quality of concrete is placed in each location as shown, shall insure that the concrete is consolidated full depth and that finishing is performed as specified. The placing foreman shall be responsible for measuring and recording concrete temperatures and ambient temperature hourly during placing operations, weather conditions, time of placement, volume of concrete placed, and method of paving and any problems encountered.

3.11.5 Curing Inspection

a. Moist Curing Inspections. Each day on both work and non-work days, an inspection shall be made of all areas subject to moist curing. The surface moisture condition shall be noted and recorded. When any inspection finds an area of inadequate curing, immediate corrective action shall be taken, and the required curing period for the area shall be extended by 1 day.

b. Membrane Curing Inspection. At the end of each day's placement, the CQC Representative shall determine the quantity of compound used by measurement of the container; shall determine the area of concrete surface covered; shall then compute the rate of coverage in square feet per gallon and shall also note whether or not coverage is uniform. When the coverage rate of the curing compound is less than that specified or when the coverage is not uniform, the entire surface shall be sprayed again.

3.11.6 Cold-Weather Protection

At least once per day, an inspection shall be made of all areas subject to cold-weather protection. Any deficiencies shall be noted, corrected, and reported.

-- End of Section --

SECTION 02841

TRAFFIC AND HANDICAP PARKING SIGNS

PART 1 GENERAL

1.1 REFERENCES

The publications listed below form a part of this specification to the extent referenced. The publications are referred to in the text by basic designation only.

AMERICAN NATIONAL STANDARDS INSTITUTE STANDARD (ANSI)

ANSI D6.1 (1988) Manual on Uniform Traffic Control Devices for Streets and Highways (ANSI D6.1; AASHTO M 268)

AMERICAN SOCIETY FOR TESTING AND MATERIALS STANDARD (ASTM)

ASTM B 209 (1996) Aluminum and Aluminum-Alloy Sheet and Plate

ASTM D 4956 (1995) Reflective Sheeting for Traffic Control

1.2 DELIVERY AND STORAGE1.2 DELIVERY AND STORAGE

Deliver signs to the site in manufacturer's original wrappings and packages clearly labeled with the manufacturer's name, brand name, size, type, message, and related information. Store in a safe, dry, clean, and wall ventilated area, protected from damage, soiling, and moisture. Store packages flat. Do not open containers until needed for installation unless verification inspection is required.

PART 2 PRODUCTS

2.1 SIGNS

Except where otherwise indicated or specified, all materials shall conform to ANSI D6.1. Unless otherwise shown, all signs shall be "standard" sizes as specified in ANSI D6.1.

2.1.1 Handicap Parking Sign

Sign shall be constructed of 16 gage steel with baked-enamel finish and shall be similar to sign No. R7-8 in ANSI D6.1. Van Accessible sign shall be same construction, size as shown on drawings.

2.2 POSTS AND SLEEVES

Posts and sleeves shall be standard schedule 40 galvanized steel pipe and shall conform to the indicated details.

2.3 HARDWARE

Bolts, nuts, washers, and clamps shall be either cadmium plated or galvanized steel. Bolts shall be a minimum of 5/16-inch in diameter. Clamps shall be two-piece assemblies of at least 14 gage steel, or shall be an adjustable steel-strap bracket as approved.

2.4 CONCRETE

Concrete shall be 3,000 p.s.i. conforming to SECTION: CONCRETE.

PART 3 EXECUTION

Except where otherwise indicated or specified, all work shall conform to ANSI D6.1. Signs of the type and size indicated shall be installed in locations shown on the drawings.

--End of Section--

SECTION 02935

TURF

PART 1 GENERAL

1.1 REFERENCES

The publications listed below form a part of this specification to the extent referenced. The publications are referred to in the text by basic designation only.

AGRICULTURAL MARKETING SERVICE (AMS)

AMS-01 (Amended thru: Aug 1988) Federal Seed Act Regulations (Part 201-202)

COMMERCIAL ITEM DESCRIPTIONS (CID)

CID A-A-1909 (Basic; Notice 1) Fertilizer

1.2 SUBMITTALS

Government approval is required for submittals with a "GA" designation; submittals having an "FIO" designation are for information only. The following shall be submitted in accordance with Section 01330 SUBMITTAL PROCEDURES:

SD-01 Data

Manufacturer's Literature; FIO.

Manufacturer's literature discussing physical characteristics, application and installation instructions for erosion control material, and for chemical treatment material.

SD-07 Schedules

Equipment List; FIO.

A list of proposed pesticide application equipment to be used in performance of turfing operation, including descriptive data and calibration tests.

SD-08 Statements

Delivery; FIO.

Delivery schedule, at least 10 days prior to the intended date of the first delivery.

Application of Pesticide; FIO.

Pesticide treatment plan with proposed sequence of pesticide treatment work. The pesticide trade name, chemical composition, formulation, concentration, application rate of active ingredients and method of application for all materials; and the name and state license number of the state certified applicator shall be included.

Maintenance Report; FIO.

Written record of maintenance work performed.

Turf Establishment Period; FIO.

Written calendar time period for the turf establishment period. When there is more than one turf establishment period, the boundaries of the turfed area covered for each period shall be described.

SD-13 Certificates

Certificates of compliance certifying that materials meet the requirements specified, prior to the delivery of materials. Certified copies of the reports for the following materials shall be included:

Sod; FIO.

For species, mixture percentage, percent purity, field location.

Fertilizer; FIO.

For chemical analysis, composition percent.

Agricultural Limestone; FIO.

For calcium carbonate equivalent and sieve analysis.

Pesticide Material; FIO.

For EPA registration number and registered uses.

Topsoil; FIO.

For pH, particle size, chemical analysis and mechanical analysis.

1.3 SOURCE INSPECTIONS

Sod material will be subject to inspection by the Contracting Officer at the growing site.

1.4 DELIVERY, INSPECTION, STORAGE, AND HANDLING

1.4.1 Delivery

1.4.1.1 Protection

Sod shall be protected from drying out and contamination during delivery.

1.4.1.2 Topsoil

A soil test shall be provided for topsoil delivered to the site.

1.4.1.3 Soil Amendments

Soil amendments shall be delivered to the site in the original, unopened containers bearing the manufacturer's chemical analysis.

In lieu of containers, soil amendments may be furnished in bulk. A chemical analysis shall be provided for bulk deliveries.

1.4.1.4 Pesticide

Pesticide material shall be delivered to the site in the original, unopened containers bearing legible labels indicating the Environmental Protection Agency (EPA) registration number and the manufacturer's registered uses.

1.4.2 Inspection

Sod shall be inspected upon arrival at the job site by the Contracting Officer for conformity to type and quality in accordance with paragraph MATERIALS. Other materials shall be inspected for meeting specified requirements and unacceptable materials shall be removed from the job site.

1.4.3 Storage

Materials shall be stored in areas designated by the Contracting Officer. Sod shall be lightly sprinkled with water, covered with moist burlap, straw, or other covering and protected from exposure to wind and direct sunlight until planted. Covering for sod shall allow air to circulate and prevent internal heat from building up. Lime and fertilizer shall be stored in cool, dry locations away from contaminants. Chemical treatment materials shall not be stored with other landscape materials.

1.4.4 Handling

1.4.4.1 Materials

Care shall be taken to avoid injury to sod. Except for bulk deliveries, materials shall not be dropped or dumped from vehicles.

1.4.4.2 Time Limitation

a. Sod: Limitation of the time between harvesting and placing of sod shall be 36 hours.

PART 2 PRODUCTS

2.1 MATERIALS

2.1.1 Sod

2.1.1.1 Sod Classification

Nursery-grown sod shall be provided as classified by applicable state laws. Each individual sod section shall be of a size to permit rolling and lifting without breaking.

2.1.1.2 Grass Species

Grass species shall be proportioned as follows:

Botanical Name	Common Name	Mixture Percent
Cynodon Dactylon	Common Bermuda Grass	98

2.1.1.3 Quality

The sod shall be relatively free of thatch, diseases, nematodes, soil-borne insects, weeds or undesirable plants, stones larger than 2 inches in any dimension, woody plant roots and other material detrimental to a healthy stand of turf. Sod that has become dry, moldy, or yellow from heating, or has irregularly shaped pieces of sod and torn or uneven ends shall be rejected.

2.1.1.4 Thickness

Sod shall be machine cut to a uniform thickness of 1-1/4 inches within a tolerance of 1/4 inch, excluding top growth and thatch. Measurement for thickness shall exclude top growth and thatch.

2.1.1.5 Anchors

Sod anchors shall be as recommended by the sod supplier.

2.1.2 Soil Amendments

Soil amendments shall consist of lime, fertilizer, organic soil amendments and soil conditioners meeting the following requirements.

2.1.2.1 Lime

Lime shall be agricultural limestone and shall have a minimum calcium carbonate equivalent of 90 percent and shall be ground to such a fineness that at least 90 percent will pass a 10-mesh sieve and at least 50 percent will pass a 60-mesh sieve.

2.1.2.2 Fertilizer

Fertilizer shall be commercial grade, free flowing, uniform in composition and conforming to CID A-A-1909. Granular Fertilizer: As recommended by the soil test.

2.1.2.3 Organic Soil Amendments

a. Topsoil: The existing surface soil shall be stripped and stockpiled on the site in accordance with Section 02210 GRADING. When required beyond that available from stripping, the topsoil shall be delivered. Delivered topsoil shall conform to topsoil requirements specified in Section 02210 GRADING, and shall be amended as recommended by soil test.

b. Peat: Peat moss derived from a bog, swampland or marsh shall conform to ASTM D 2607.

c. Sand: Clean, free of toxic materials; 95 percent by weight shall pass a No. 10 sieve and 10 percent by weight shall pass a No. 16 sieve.

d. Rotted Manure: Well rotted, horse or cattle manure containing a maximum 25 percent by volume of straw, sawdust, or other bedding materials, free of stones, sticks, soil and containing no chemicals or ingredients harmful to plants.

e. Decomposed Wood Derivatives: Ground bark, sawdust, or other wood waste material free of stones, sticks, soil, and toxic substances harmful to plants, stabilized with nitrogen and having the following properties:

Particle Size: Minimum percent by weight passing:

Sieve Size	Percent
No. 4	95
No. 4	80

Nitrogen Content: Minimum percent based on dry weight:

Material	Percent
Redwood Sawdust	0.5
Fir Sawdust	0.7
Fir or Pine Bark	1.0

f. Calcined Clay: Granular particles produced from montmorillonite clay calcined to minimum temperature of 1200 degrees F to the following gradation: minimum 90 percent passing No. 8, 99 percent retained on No. 60 sieve and maximum 2 percent passing No. 100 sieve. Bulk density: maximum 40 pounds per cubic foot.

2.1.2.4 Soil Conditioner

Soil conditioner shall be for single use or in combination to meet requirements for topsoil. Gypsum shall be commercially packaged, free flowing, minimum 95 percent calcium sulfate by volume.

2.1.3 Mulch

Mulch shall be free from weeds, mold, and other deleterious materials.

2.1.3.1 Straw

Straw shall be stalks from oats, wheat, rye, barley, or rice furnished in air-dry condition and with a consistency for placing with commercial mulch-blowing equipment.

2.1.3.2 Hay

Hay shall be native hay, sudan-grass hay, broomsedge hay, or other herbaceous mowings furnished in an air-dry condition suitable for placing with commercial mulch-blowing equipment.

2.1.3.3 Wood Cellulose Fiber

Wood cellulose fiber shall not contain any growth or germination-inhibiting factors and shall be dyed an appropriate color to facilitate visual metering during application. Composition on air-dry weight basis: 9 to 15 percent moisture, pH range from 4.5 to 6.0.

2.1.3.4 Wood Chips

Wood chips shall be chips or shredded bark with maximum particle size of 3/16 inch.

2.1.4 Asphalt Adhesive

Asphalt adhesive shall conform to the following:

2.1.4.1 Emulsified Asphalt

Conforming to ASTM D 977, Grade SS-1.

2.1.4.2 Cutback Asphalt

Conforming to ASTM D 2028, designation RC-70.

2.1.5 Water

Water shall not contain elements toxic to plant life.

2.1.6 Pesticide

Pesticide shall be insecticide, herbicide, fungicide, nematocide, rodenticide and miticide. For the purpose of this specification, soil fumigant shall have the same requirements as a pesticide. The pesticide material shall be EPA registered and approved insecticide, herbicide, fungicide, nematocide, rodenticide, miticide, and soil fumigant.

2.1.7 Erosion Control Material

Soil erosion control shall conform to the following:

2.1.7.1 Soil Erosion Control Blanket

Machine produced mat of wood excelsior formed from a web of interlocking wood fibers, covered on one side with either knitted straw blanket-like mat construction, covered with biodegradable plastic mesh, or interwoven biodegradable thread, plastic netting or twisted kraft paper cord netting.

2.1.7.2 Soil Erosion Control Fabric

Knitted construction of polypropylene yarn with uniform mesh openings 3/4 to 1 inch square with strips of biodegradable paper. Filler paper strips shall last 6 to 8 months.

2.1.7.3 Soil Erosion Control Net

Heavy, twisted jute mesh weighing approximately 1.22 pounds per linear yard and 4 feet wide with mesh openings of approximately 1 inch square.

2.1.7.4 Soil Erosion Control Chemicals

High-polymer synthetic resin or cold-water emulsion of selected petroleum resins.

2.1.7.5 Hydrophilic Colloids

Hydrophilic colloids shall be physiologically harmless to plant and animal life, without phytotoxic agents. Colloids shall be naturally occurring, silicate powder based, and shall form a water insoluble membrane after curing. Colloids must resist mold growth.

2.1.7.6 Anchors

Erosion control anchor material shall be as recommended by the manufacturer.

PART 3 EXECUTION

3.1 SODDING TIMES AND CONDITIONS

Unless recommended otherwise by the Department of Agriculture County Extension Service due to local experience, the following dates govern.

3.1.1 Sodding Time

Sod shall be placed from March 01 through August 31.

3.1.2 Turfing Conditions

Turf operations shall be performed only during periods when beneficial results can be obtained. When drought, excessive moisture or other unsatisfactory conditions prevail, the work shall be stopped when directed. When special conditions warrant a variance to the turf operations, proposed times shall be submitted to and approved by the Contracting Officer.

3.2 SITE PREPARATION

3.2.1 Grading

The Contracting Officer shall verify that finished grades are as indicated on drawings, and the placing of topsoil and the smooth grading has been completed in accordance with Section 02210 GRADING.

3.2.2 Application of Soil Amendments

3.2.2.1 Soil Test

A soil test shall be performed for pH, chemical analysis and mechanical analysis to establish the quantities and type of soil amendments required to meet local growing conditions for the type and variety of turf specified.

3.2.2.2 Lime

Lime shall be applied at the rate recommended by the soil test. Lime shall be incorporated into the soil to a minimum depth of 4 inches or may be incorporated as part of the tillage operation.

3.2.2.3 Fertilizer

Fertilizer shall be applied at the rate recommended by the soil test Fertilizer shall be incorporated into the soil to a minimum depth of 4 inches and may be incorporated as part of the tillage.

3.2.2.4 Soil Conditioner

Soil Conditioner shall be spread uniformly over the soil to a minimum depth as recommended by the soil test and thoroughly incorporated by tillage into the soil to a minimum depth of 4 inches.

3.2.3 Tillage

3.2.3.1 Minimum Depth

Soil on slopes gentler than 3-horizontal-to-1-vertical shall be tilled to a minimum depth of 4 inches. On slopes between 3-horizontal-to-1-vertical and 1-horizontal-to-1 vertical, the soil shall be tilled to a minimum depth of 2 inches by scarifying with heavy rakes, or other method. Rototillers shall be used where soil conditions and length of slope permit. On slopes 1-horizontal-to-1 vertical and steeper, no tillage is required.

3.2.4 Finished Grading

3.2.4.1 Preparation

Turf areas shall be filled as needed or have surplus soil removed to attain the finished grade. Drainage patterns shall be maintained as indicated on drawings. Turf areas compacted by construction operations shall be completely pulverized by tillage. Soil used for repair of erosion or grade deficiencies shall conform to topsoil requirements specified in Section 02210 GRADING. Finished grade shall be 1 inch below the adjoining grade of any surfaced area. New surfaces shall be blended to existing areas.

3.2.4.2 Lawn Area Debris

Lawn areas shall have debris and stones larger than 1 inch in any dimension removed from the surface.

3.2.4.3 Field Area Debris

Field areas shall have debris and stones larger than 3 inches in any dimension removed from the surface.

3.2.4.4 Protection

Finished graded areas shall be protected from damage by vehicular or pedestrian traffic and erosion.

3.3 SODDING

3.4.1 General

Sod all disturbed areas. Adequate soil moisture shall be ensured prior to sodding by spraying water on the area to be sodded and wetting the soil to a minimum depth of 1 inch.

3.3.2 Placing Sod

Rows of sod shall be placed parallel to and tightly against each other. Joints shall be staggered laterally. The sod strips shall not be stretched or overlapped. All joints shall be butted tight. Voids and air drying of roots shall be prevented. On long slopes, sod shall be laid at right angles to slopes. In ditches, sod shall be laid at right angles to the flow of water. When required, the sod shall be anchored by placing anchors a minimum distance of 2 feet on center with a minimum of 2 anchors per sod section.

3.3.3 Finishing

Air pockets shall be eliminated and a true and even surface shall be provided by tamping or rolling the sod in place. Displacement of the sod shall be assured by knitting of sod to the soil. Frayed edges shall be trimmed and holes or missing corners shall be patched in the sod.

3.3.4 Watering Sod

Watering shall be started immediately after completing each day of sodding. Water shall be applied at a rate sufficient to ensure moist soil conditions to a minimum depth of 1 inch. Run-off and puddling shall be prevented.

3.4 EROSION CONTROL

3.4.1 Erosion Control Material

Erosion control material, where indicated or required, shall be installed in accordance with manufacturer's instructions. Placement of the erosion control material shall be accomplished without damage to installed material or without deviation to finished grade.

3.4.2 Temporary Turf Cover

3.4.2.1 General

When there are contract delays in the turfing operation or a quick cover is required to prevent erosion, the areas designated for turf shall be seeded with a temporary seed as directed by the Contracting Officer.

3.4.2.2 Application

When no other turfing materials have been applied, the quantity of one half of the required soil amendments shall be applied and the area tilled in accordance with paragraph SITE PREPARATION. Seed shall be uniformly broadcast and applied at the rate of 3 pounds per 1000 square feet. The area shall be watered as required.

3.5 APPLICATION OF PESTICIDE

When pesticide becomes necessary to remove a pest or disease, a state- certified applicator shall apply required pesticides in accordance with EPA label restrictions and recommendations. Hydraulic equipment shall be provided for the liquid application

of pesticides with a leak-proof tank, positive agitation methods, controlled application pressure and metering gauges. A pesticide plan shall be provided to the Contracting Officer as stated in paragraph SUBMITTALS.

3.6 RESTORATION AND CLEAN UP

3.6.1 Restoration

Existing turf areas, pavements and facilities that have been damaged from the turfing operation shall be restored to original condition at Contractor's expense.

3.6.2 Clean Up

Excess and waste material shall be removed from the planting operation and shall be disposed of off the site. Adjacent paved areas shall be cleaned.

3.7 PROTECTION OF TURFED AREAS

Immediately after turfing, the area shall be protected against traffic or other use by erecting barricades and providing signage as required, or as directed by the Contracting Officer.

3.8 TURF ESTABLISHMENT PERIOD

3.8.1 Commencement

The Turf Establishment Period for establishing a healthy stand of turf shall begin on the first day of work under this contract and shall end three (3) months after the last day of turfing operations required by this contract. Written calendar time period shall be furnished to the Contracting Officer for the Turf Establishment Period. When there is more than one turf establishment period, describe the boundaries of the turfed area covered for each period.

3.8.2 Satisfactory Stand of Turf

3.8.2.1 Sodded Area

A satisfactory stand of turf from the sodding operation is defined as living sod uniform in color and leaf texture. Bare spots shall be no larger than 2 inches square.

3.8.3 Maintenance During Establishment Period

3.8.3.1 General

Maintenance of the turfed areas shall include eradicating weeds, eradicating insects and diseases, protecting embankments and ditches from erosion, maintaining erosion control materials and mulch, protecting turfed areas from traffic, mowing, watering, and post-fertilization.

3.8.3.2 Mowing

Lawn Areas: Lawn areas shall be mowed to a minimum height of 1\2 inches when the average height of the turf becomes 2 inches.

Clippings shall be removed when the amount of cut turf is heavy enough to damage the turfed areas.

3.8.3.3 Watering

Watering shall be at intervals to obtain a moist soil condition to a minimum depth of 1 inch. Frequency of watering and quantity of water shall be adjusted in accordance with the growth of the turf. Run-off, puddling and wilting shall be prevented.

3.8.3.4 Post-Fertilization

Nitrogen carrier fertilizer shall be applied at the rate of 0.5 pounds of available nitrogen per 1000 square feet after the first month and again in 3 months prior to the final acceptance. The application shall be timed prior to the advent of winter dormancy and shall avoid excessively high nitrogen levels.

3.8.3.5 Pesticide

Treatment for disease or pest shall be in accordance with paragraph APPLICATION OF PESTICIDE.

3.8.3.6 Repair

The Contractor shall re-establish as specified herein, eroded, damaged or barren areas. Mulch shall also be repaired or replaced as required.

3.8.3.7 Maintenance Report

A written record shall be furnished to the Contracting Officer of the maintenance work performed.

3.9 FINAL ACCEPTANCE

3.9.1 Preliminary Inspection

Prior to the completion of the Turf Establishment Period, a preliminary inspection shall be held by the Contracting Officer. Time for the inspection shall be established in writing. The acceptability of the turf in accordance with the Turf Establishment Period shall be determined. An unacceptable stand of turf shall be repaired as soon as turfing conditions permit.

3.9.2 Final Inspection

A final inspection shall be held by the Contracting Officer to determine that deficiencies noted in the preliminary inspection have been corrected. Time for the inspection shall be established in writing.

-- End of Section --

SECTION 02950

TREES, SHRUBS, GROUND COVERS, AND VINES

PART 1 GENERAL

1.1 REFERENCES

The publications listed below form a part of this specification to the extent referenced. The publications are referred to in the text by basic designation only.

AMERICAN ASSOCIATION OF NURSERYMEN (AAN)

AAN-01	(1990) American Standard for Nursery Stock

AMERICAN SOCIETY FOR TESTING AND MATERIALS (ASTM)

ASTM D 2607	(1969) Peats, Mosses, Humus, and Related Products

COMMERCIAL ITEM DESCRIPTIONS (CID)

CID A-A-1909	(Basic; Notice 1) Fertilizer

1.2 SUBMITTALS

Government approval is required for submittals with a "GA" designation; submittals having an "FIO" designation are for information only. The following shall be submitted in accordance with Section 01330 SUBMITTAL PROCEDURES:

SD-01 Data

Edging Material; FIO.

Manufacturer's literature discussing physical characteristics, application and installation instructions for edging material and erosion control material.

SD-07 Schedules

Application of Pesticide Material; FIO.

A list of the proposed pesticide application equipment to be used in performance of the planting work, including descriptive data and calibration tests.

SD-08 Statements

Delivery; FIO. Application of Pesticide Material; FIO.

The following work plans, before work is started.

a. Delivery Schedule at least 10 days prior to the intended date of the first delivery.

b. Pesticide Treatment Plan, giving proposed sequence of pesticide

treatment work, before work is started. The pesticide trade name, chemical composition, formulation, concentration, application rate of active ingredients and methods of application for all materials furnished, and the name and state license number of the state certified applicator shall be included.

SD-09 Reports

Soil Test; FIO. Percolation Test; FIO.

Certified reports of inspections and laboratory tests, prepared by an independent testing agency, including analysis and interpretation of test results. Each report shall be properly identified. Test methods used and compliance with recognized test standards shall be described.

SD-13 Certificates

Topsoil; FIO. Soil Amendments; FIO. Plants; FIO. Pesticide; FIO.

Certificates of compliance certifying that materials meet the requirements specified, prior to the delivery of materials. Reports for the following materials shall be included.

a. Topsoil: For pH, chemical analysis, mechanical analysis and particle size.

b. Fertilizer: For chemical analysis and composition percent.

c. Agricultural Limestone: For sieve analysis and calcium carbonate equivalent.

d. Peat: For compliance with ASTM D 2607.

e. Plant Materials: For botanical and common name, size, quantity by species, grade, nursery grown.

f. Pesticide Material: For EPA registration number and registered uses.

SD-18 Records

Plant Establishment Period; FIO. Maintenance Report; FIO. Maintenance Instructions; FIO.

a. Maintenance Report. Written record of maintenance work performed and quantity of plant losses and replacements.

b. Plant Establishment Period. Written calendar time period for the beginning of the plant establishment period. When there is more than one establishment period, the boundaries of the planted areas covered for each period shall be described.

c. Maintenance Instruction. Written instructions for year-round care of installed plants.

1.3 SOURCE INSPECTIONS

1.3.1 Plant Materials

Plant materials shall be subject to inspection at the growing site by the Contracting Officer.

1.3.2 Delivered Topsoil

The source of topsoil shall be subject to inspection by the Contracting Officer.

1.4 SHIPMENT, DELIVERY, INSPECTION, STORAGE, AND HANDLING

1.4.1 Shipment

1.4.1.1 Preparation

Digging and preparation for shipment shall be done in a manner that will not cause shock or damage to branches, trunk, or root systems.

a. Balled and Burlapped (BB) Plants: Ball size and ratio shall be provided as recommended by AAN-01. The ball shall be of a diameter and depth to encompass enough fibrous and feeding root system necessary for the full recovery of the plant. Removal shall be accomplished by hand digging or mechanical devices. Center the plant stem or trunk in the ball and clean cut all roots at the ball surface. No roots shall be pulled from the ground. The root ball shall be completely wrapped with burlap or other suitable material and securely laced with twine.

b. Balled and Potted (Pot) Plants: Ball size and ratio shall be provided as recommended by AAN-01. The ball shall be of a diameter and depth to encompass enough fibrous and feeding root system necessary for the full recovery of the plant. Removal shall be accomplished by hand digging or mechanical devices. The plant stem or trunk shall be centered in the ball and all roots shall be clean cut at the ball surface. No roots shall be pulled from the ground. Containers shall be used to retain the ball unbroken. Container shall be sufficiently rigid to hold ball shape and protect root mass during shipping.

1.4.1.2 Antidesiccant Application

Plants shall be sprayed with an antidesiccant as leaf budding occurs or when plant material has soft growth.

1.4.2 Delivery

1.4.2.1 Identification

Plants shall be identified with durable waterproof labels and weather-resistant ink. Plants shall have attached labels stating the correct plant name and size.

1.4.2.2 Protection During Delivery

Plants shall be protected during delivery to prevent desiccation of the plant or damage to the roots or balls. Branches of plants shall be protected by tying-in the branches and covering all exposed branches.

1.4.2.3 Topsoil

A soil test shall be provided for topsoil delivered to the site.

1.4.2.4 Soil Amendments

Soil amendments shall be delivered to the site in the original, unopened containers bearing the manufacturer's chemical analysis. In lieu of containers, soil amendments may be furnished in bulk. A chemical analysis shall be provided for bulk deliveries.

1.4.2.5 Pesticide

Pesticide materials shall be delivered to the site in the original unopened containers bearing legible labels indicating the Environmental Protection Agency (EPA) registration numbers and the registered uses.

1.4.3 Inspection

Plant material shall be inspected upon arrival at the jobsite by the Contracting Officer for conformity to the paragraph PLANTS and paragraph Shipment, and any unacceptable plant material shall be removed from the jobsite.

1.4.4 Storage

1.4.4.1 Plant Storage

Plants not installed on the day of arrival at the site shall be stored and protected in areas designated by the Contracting Officer. Plants shall be protected from exposure to wind and shall be shaded from the sun. Covering that will allow air to circulate and prevent internal heat from building up shall be provided. Bare-root plants shall be heeled-in. All plants shall be kept in a moist condition by watering with a fine mist spray until planted.

1.4.4.2 Storage of Other Materials

Soil amendments shall be stored in dry locations away from contaminants. Pesticide materials shall not be stored with other landscape materials. Storage of materials shall be in areas designated or as approved by the Contracting Officer.

1.4.5 Handling

Care shall be taken to avoid injury to plants. Materials shall not be dropped from vehicles. Balled and burlapped plants shall be handled carefully to avoid cracking or breaking the earth ball and container-grown plants shall be handled by the container. Plants shall not be handled by the trunk or stems.

1.4.5.1 Time Limitation

a. Mulch: Limitation of time between installing plant and placing mulch is 48 hours.

b. Trunk Wrap: Limitation of time between installing deciduous trees and wrapping the trunks is 24 hours.

1.5 WARRANTY

Furnished plants shall be guaranteed to be in a vigorous growing condition for a period of 12 months regardless of the contract time period. A plant shall be replaced one time under this guarantee. A written calendar time period for the guarantee of plant growth shall be furnished to the Contracting Officer.

PART 2 PRODUCTS

2.1 PLANTS

2.1.1 Varieties

Plants shall be nursery grown or plantation grown stock conforming to AAN-01 and shall be of the varieties specified in the plant list bearing botanical names listed in one or more of the publications listed under "Nomenclature" in AAN-01.

2.1.2 Substitutions

Substitutions will not be permitted without written request from the Contractor for approval by the Contracting Officer.

2.1.3 Growing Conditions

Plants shall be grown under climatic conditions similar to those in the locality of the project.

2.1.4 Quality

Well shaped, well grown, vigorous, healthy plants having healthy and well branched root systems shall be provided. Plants shall be provided free from disease, harmful insects and insect eggs, sun-scald injury, disfigurement and abrasion. Plants shall be provided that are typical of the species or variety and conforming to standards as set forth in AAN-01 and as specified herein.

2.1.4.1 Shade and Flowering Trees

A height relationship to caliper shall be provided as recommended by AAN-01. Height of branching should bear a relationship to the size and variety of tree specified and with the crown in good balance with the trunk. Trees shall not be "poled" or the leader removed.

a. Single stem: Trunk shall be reasonably straight and symmetrical with crown and have a persistent main leader.

b. Multi-stem: All countable stems, in aggregate, shall average the size specified. To be considered a stem, there should be no division of the trunk which branches more than six inches from ground level.

c. Specimen: A plant shall be provided that is well branched and pruned naturally according to the species. The form of growth desired, which may not be in accordance with natural growth habit, shall be as indicated.

2.1.4.2 Deciduous Shrub

Plants shall be provided that have the height and number of primary stems as recommended by AAN-01. An acceptable plant shall be well shaped with sufficient well-spaced side branches recognized by the trade as typical for the variety grown in the region.

2.1.4.3 Groundcovers and Vines

Plants shall be provided with the minimum number of runners and length of runner as recommended by AAN-01. Plants shall be furnished that have heavy, well developed and balanced top with vigorous well developed root system and shall be furnished in containers.

2.1.5 Size

Plants shall be furnished in sizes indicated. Plants larger in size than specified may be provided at no additional cost to the Government.

2.1.6 Measurement

Plant measurements shall be in accordance with AAN-01.

2.2 TOPSOIL

Topsoil shall be the existing surface soil stripped to the depth indicated and stockpiled on the site in accordance with Section 02210 GRADING. Additional topsoil, if required, beyond that available from stripping operations, shall be delivered. Delivered topsoil shall conform to topsoil requirement specified in Section 02210 GRADING and shall be amended as recommended by soil tests for the plants specified.

2.2.1 Soil Test

A soil test shall be performed for pH, particle size, chemical analysis and mechanical analysis to establish the quantities and type of soil amendments required to meet local growing conditions for the type and variety of plants specified.

2.3 SOIL AMENDMENTS

Soil amendments consist of lime, fertilizer, bonemeal, organic soil amendments and soil conditioner.

2.3.1 Lime

Lime shall be agricultural limestone and shall have a minimum calcium carbonate equivalent of 90 percent and shall be ground to such a fineness that at least 90 percent will pass a 10-mesh sieve and at least 50 percent will pass a 60-mesh sieve.

2.3.2 Fertilizer

Fertilizer shall be commercial grade, free flowing, uniform in composition and conforming to CID A-A-1909.

2.3.2.1 Dry Fertilizer

Granular fertilizer: Consists of nitrogen-phosphorous-potassium ratio: 10 percent nitrogen 20 percent phosphorous, and 10 percent potassium.

2.3.2.2 Liquid Fertilizer

Commercially available liquid fertilizer shall consist of completely soluble plant foods suitable for application as foliage spray.

2.3.3 Bonemeal

Bonemeal shall be a finely ground, steamed bone product containing from 2 to 4 percent nitrogen and 16 to 40 percent phosphoric acid.

2.3.4 Organic Soil Amendments

2.3.4.1 Peat

Peat shall be a natural product of peat humus derived from a bog, swampland or marsh and shall conform to ASTM D 2607.

2.3.4.2 Sand

Sand shall be clean and free of toxic materials and at least 95 percent by weight shall pass a 10-mesh sieve, and 10 percent by weight shall pass a 16-mesh sieve.

2.3.4.3 Rotted Manure

Rotted manure shall be unleached stable or cattle manure containing not more than 25 percent by volume of straw, sawdust, or other bedding materials and containing no chemicals or ingredients harmful to plants. The manure shall be heat treated to kill weed seeds and be free of stones, sticks, and soil.

2.3.4.4 Decomposed Wood Derivatives

Decomposed wood derivatives shall be ground bark, sawdust, or other wood waste material free of stones, sticks, and toxic substances harmful to plants and stabilized with nitrogen and having the following properties:

Particle size	Minimum percent by weight passing
No. 4 mesh screen	95
No. 8 mesh screen	80

Nitrogen Content	Minimum percent based on dry weight
Redwood Sawdust	0.5
Fir Sawdust	0.7
Fir or Pine Bark	1.0

2.3.5 Soil Conditioner

For single use or in combination to meet requirements for topsoil.

2.3.5.1 Gypsum

Gypsum shall be commercially packaged, free flowing, and a minimum of 95 percent calcium sulfate by volume.

2.3.5.2 Aluminum Sulfate

Aluminum sulfate shall be commercial grade.

2.4 MULCH

Mulch shall be free from weeds, mold and other deleterious materials.

2.4.1 Organic Mulch Material

Organic mulch materials shall be ground or shredded bark.

2.5 GEOTEXTILE

2.5.1 Woven Polypropylene

Woven polypropylene shall be bi-directional, weigh a minimum 4 ounces per square yard, be a minimum 10 mils thick and come in 6 feet wide rolls.

2.5.2 Nonwoven Polypropylene

Nonwoven polypropylene shall be spunbonded, water permeable, non-brittle, weigh a minimum 4 ounces per square yard, be a minimum 10 mils thick and come in 6 feet wide rolls.

2.5.3 Nonwoven polyester

Nonwoven polyester shall be spunbonded, water permeable, non-brittle, weigh a minimum 4 ounces per square yard, be a minimum 10 mils thick and come in 6 feet wide rolls.

2.6 TRUNK WRAPPING MATERIAL

Tree wrap shall be two thicknesses of crinkled paper cemented together with a layer of bituminous material. Wrapping material shall be a minimum of 4 inches in width and have a stretch factor of 33-1/3 percent. Twine for tying shall be lightly tarred medium or coarse sisal yarn.

2.7 GUYING AND STAKING MATERIAL

2.7.1 Stakes

Stakes for tree support shall be rough sawn wood, free from knots, rot, cross grain, or other defects that would impair the strength. Standard stakes shall be hardwood or fir treated with pentachlorophenol.

2.7.1.1 Bracing Stakes

Bracing stakes shall be a minimum of 2 inches by 2 inches or 2-1/2 inches in diameter by 8 feet long and pointed at one end.

2.7.1.2 Ground Stakes

Ground stakes shall be a minimum of 2 inches by 2 inches or 2-1/2 inches in diameter by 3 feet long and pointed at one end.

2.7.2 Guying Material

2.7.2.1 Guying Wire

Guying wire shall be 12-gauge annealed galvanized steel wire.

2.7.3 Chafing Guard

Hose chafing guards shall be new or used 2-ply reinforced rubber or plastic hose and shall be all the same color on the project. Length shall be 1-1/2 times the circumference of the plant at its base.

2.7.4 Flags

Flags to be fastened to guys shall be white surveyor's plastic tape, 6 inches in length.

2.7.5 Turnbuckles

Turnbuckles shall be galvanized or cadmium-plated steel and have a 3-inch minimum lengthwise opening fitted with screw eyes.

2.8 EDGING MATERIAL

2.8.1 Steel

Steel edging shall be galvanized with slots provided for stakes and shall be at least 1/8 inch thick and 4 inches wide, and supplied in at least 16-foot lengths.

2.8.2 Plastic

Plastic edging shall be 4-5/8 inches deep by 5/32 inch thick in 20 foot lengths.

2.8.3 Aluminum

Aluminum edging shall be black electrostatically painted aluminum alloy 6061-T6 hardness, 5-1/2 inches deep by 3/16 inch thick in 16 foot lengths with horizontal undulations.

2.8.4 Anchors

Edging material anchors shall be as recommended by the manufacturer.

2.9 WATER

Water shall not contain elements toxic to plant life.

2.10 ANTIDESICCANT

Antidesiccant shall be an emulsion that will provide a film over plant

surfaces permeable enough to permit transpiration, and shall not damage the plant.

2.11 EROSION CONTROL MATERIAL

2.11.1 Soil Erosion Control Blanket

Blanket shall be machine-produced mat of wood excelsior formed from a web of interlocking wood fibers, covered on one side with either knitted straw blanket-like mat-construction, covered with biodegradable plastic mesh, or interwoven with biodegradable thread, plastic netting or twisted kraft paper cord netting.

2.11.2 Soil Erosion Control Fabric

Control fabric shall be knitted construction of polypropylene yarn with uniform mesh openings 3/4 to 1 inch square with strips of biodegradable paper. Filler paper strips shall last 6 to 8 months.

2.11.3 Soil Erosion Control Net

Control net shall be heavy, twisted jute mesh weighing approximately 1.22 pounds per linear yard and 4 feet wide with mesh openings of approximately 1 inch square.

2.11.4 Anchors

Erosion control anchors shall be as recommended by the manufacturer.

2.12 TREE WOUND DRESSING

Tree wound dressing shall be a black asphalt-base antiseptic paint.

2.13 PESTICIDE

Pesticide shall be insecticide, herbicide and fungicide. Pesticide material shall be labeled for use and applied only as registered by EPA.

PART 3 EXECUTION

3.1 EXAMINATION

3.1.1 Verify Grades

The Contracting Officer shall verify the finished grades are as indicated on drawings, and the placing of topsoil and smooth grading has been completed in accordance with Section 02210 GRADING.

3.1.2 Underground Obstructions to Planting

The location of underground utilities and facilities shall be verified. Damage to underground utilities and facilities shall be repaired at the Contractor's expense.

3.2 SITE PREPARATION

3.2.1 Layout

Plant material locations and bed outlines shall be staked on the project site before any excavation is made. Plant material locations may be adjusted by the Contracting Officer to meet field conditions.

3.2.2 Protection of Existing Vegetation

If lawns have been established prior to planting operations, the surrounding turf shall be covered before excavations are made in a manner that will protect turf areas. Existing trees, shrubbery, and beds that are to be preserved shall be barricaded in a manner that will effectively protect them during planting operations.

3.3 EXCAVATION

3.3.1 Obstructions Below Ground or Poor Drainage

When obstructions below ground or poor drainage affect the contract operation, proposed adjustments to plant location, type of plant and planting method or drainage correction shall be submitted to and approved by the Contracting Officer.

3.3.2 Turf Removal

Where planting beds occur in existing turf areas, the turf shall be removed to a depth that will ensure the removal of the entire root system.

3.3.3 Plant Pits

Plant pits shall be dug to produce vertical sides and flat, uncompacted bottoms. When pits are dug with an auger and the sides of the pits become glazed, the glazed surface shall be scarified.

3.4 PERCOLATION TEST

Test for percolation shall be done to determine positive drainage of plant pits and beds. The Contracting Officer shall be notified in writing of all soil and drainage conditions detrimental to growth of plant material and shall submit proposal for correcting the condition.

3.5 PLANTING TIMES AND CONDITIONS

3.5.1 Deciduous Planting Time

Install deciduous plants from September 15 to April 15.

3.5.2 Planting Conditions

Planting operations shall be performed only during periods when beneficial results can be obtained. When drought, excessive moisture or other unsatisfactory conditions prevail, the work shall be stopped when directed. When special conditions warrant a variance to the planting operations, proposed planting times shall be submitted to and approved by the Contracting Officer.

3.6 INSTALLATION

3.6.1 Erosion Control

Where erosion control material is indicated or required, material shall be installed in accordance with manufacturer's instructions. Placement of the erosion control material shall be accomplished without damage to installed material or without deviation to finished grade.

3.6.2 Backfill Soil Mixture

The backfill soil mixture shall be a proportioned mixture thoroughly mixed by volume of topsoil and selected soil amendments as follows:

Topsoil: 60 percent to mixture

3.6.3 Setting Plants

Plants shall be set plumb and held in position until sufficient soil has been firmly placed around roots or ball. Plants shall be set in relation to surrounding grade so that they are even with the depth at which they were grown in the nursery, or container.

3.6.4 Balled and Burlapped Plants

Materials shall be removed that are metal, plastic, nylon or treated burlap, prior to backfilling. Balled and burlapped stock shall be backfilled with backfill soil mixture to approximately half the depth of the ball and then tamped and watered. Biodegradable burlap and tying material shall be carefully opened and folded back. The backfill shall be completed, tamped and watered. A 4-inch high earth saucer shall be formed around individual plants.

3.6.5 Container-Grown Plants

Non-biodegradable containers shall be removed without damage to the plant or root system. Biodegradable containers shall be split. The backfill shall be completed as specified for BB plants.

3.6.6 Groundcover Bed

3.6.6.1 Plant Beds in Existing Soil

Bed shall be tilled to a minimum depth of 6 inches where existing soil is to be used in-place. Selected soil amendments shall be spread uniformly over the bed. Selected soil amendments shall be a proportioned mixture as follows:

Peat 45 percent to mixture

The mixture shall be thoroughly incorporated into the soil to a minimum depth of 6 inches using a roto-tiller or other method to obtain a uniform and well pulverized soil mix. All sticks, stones, roots and other objectionable materials shall be removed from the surface. The bed shall be brought to a smooth and even surface blending to existing areas.

3.6.6.2 Plant Beds in Replaced Soil

When soil replacement is required, the existing soil shall be excavated and removed to a minimum depth of 6 inches and backfill soil mixture shall be placed on previously scarified subsoil to a minimum depth of 6 inches. The

bed shall be brought to a smooth and even surface blending to existing areas. Settlement shall be allowed for.

3.6.6.3 Groundcover

Groundcover may be planted after the mulch is in place. Contaminating the mulch with soil shall be avoided.

3.6.7 Staking and Guying

3.6.7.1 One Bracing Stake

Trees 4 to 6 feet tall shall be held in place with one bracing stake. The tree shall be held firmly to the stake with a double strand of wire. A chafing guard shall be used where the wire contacts the tree. Bracing stakes shall be driven vertically into firm ground and shall not injure the ball or roots.

3.6.7.2 Two Bracing Stakes

Trees over 6 feet tall shall be held in place with two bracing stakes placed on opposite sides. The tree shall be held firmly between the stakes with a double strand of wire. Chafing guards shall be used where the wire contacts the tree. Bracing stakes shall be driven vertically into firm ground and shall not injure the ball or roots.

3.6.7.3 Three Guying Wires

Trees shall be held firmly in place with three guying lines of double strand wire spaced equidistantly around the tree. The line shall be anchored with ground stakes. The line shall be anchored to the tree at a point equal to one half its height. Chafing guards shall be used where the line contacts the tree. One turnbuckle shall be centered on each line for tree straightening purposes. Ground stakes shall be driven into firm ground outside the earth saucer and plant pit with the top of the stake flush with the ground surface.

3.6.8 Flags

A flag shall be securely fastened to each guying line to be visible by pedestrians.

3.6.9 Edging Material

Edging material shall be installed in accordance with the manufacturer's recommendations and/or as indicated.

3.7 FINISHING

3.7.1 Plant Beds

Planted areas shall be uniformly edged to provide a clear-cut division line between the planted area and the adjacent turf area and to provide a shape as indicated. The entire planted area shall be raked and smoothed while maintaining the earth saucers.

3.7.2 Pruning

The total amount of foliage shall be pruned by one-fourth to one-third on installed trees and shrubs to compensate for loss of roots and transplanting shock. The typical growth habit of individual plants shall be retained. Clean cuts shall be made flush with the parent trunk. Improper cuts, stubs, dead and broken branches shall be removed. "Headback" cuts at right angles to the line of growth shall not be permitted. Trees shall not be poled or the leader removed, nor shall the leader be pruned or "topped off." Cuts or wounds measuring a minimum 1/2 inch in diameter shall be painted with the specified tree wound dressing.

3.7.3 Mulch

Mulch shall be spread to a uniform thickness of 4 inches within 48 hours after planting. Mulch shall be kept out of the crowns of shrubs and off buildings, sidewalks and other facilities.

3.7.4 Geotextile

When required for weed control, geotextile shall be placed in accordance with the manufacturer's recommendations and/or as indicated.

3.7.5 Trunk Wrap

The trunks to deciduous trees shall be wrapped within 24 hours after planting. Trees 1-1/2 inches or greater in caliper shall be wrapped with the specified material beginning at the base and extending up to the first branches. The wrapping shall be securely tied with twine at the top and bottom and at 18-inch intervals.

3.7.6 Water

Plants shall be watered as necessary to maintain an adequate supply of moisture within the root zone. Run-off, puddling and wilting shall be prevented.

3.7.7 Antidesiccant Application

Plants requiring further protection shall be sprayed with anti-desiccant in accordance with manufacturer's recommendations.

3.8 MAINTENANCE DURING PLANTING OPERATION

Installed plants shall be maintained in a healthy growing condition. Maintenance operations shall begin immediately after each plant is installed and shall continue until the plant establishment period commences. The maintenance includes watering, pruning, wound dressing, straightening and other necessary operations. Plant beds and earth saucers shall be kept free of weeds, grass and other undesired vegetation. Plants shall be checked for settlement and shall be reset proper grade as necessary. Run-off, puddling and wilting shall be prevented.

3.9 APPLICATION OF PESTICIDE MATERIAL

When pesticide becomes necessary to remove a disease or pest, a state-certified applicator shall apply required pesticide in accordance with State EPA label restrictions and recommendations. Hydraulic equipment shall be provided for the liquid application of pesticides with a leak-proof tank,

positive agitation methods, controlled application pressure and metering gauges. A pesticide treatment plan shall be provided to the Contracting Officer as specified in paragraph SUBMITTALS.

3.10 RESTORATION AND CLEAN UP

3.10.1 Restoration

Turf areas, pavements and facilities that have been damaged from the planting operation shall be restored to original condition at the Contractor's expense.

3.10.2 Clean Up

Excess and waste material from the planting operation shall be removed and disposed of off the site. Adjacent paved areas shall be cleared.

3.11 PLANT ESTABLISHMENT PERIOD

3.11.1 Commencement

On completion of the last day of the planting operation, the plant establishment period for maintaining installed plants in a healthy growing condition shall commence and shall be in effect for the remaining contract time period not to exceed 12 months. When the planting operation extends over more than one season or there is a variance to the planting times, plant establishment periods shall be established for the work completed, as directed. Written calendar time period shall be furnished to the Contracting Officer for the beginning of the plant establishment period. When there is more than one plant establishment period, describe the boundaries of the planted area covered for each period.

3.11.2 Maintenance During Establishment Period

3.11.2.1 General

Maintenance of plants shall include straightening plants, tightening stakes and guying material, repairing tree wrapping, protecting plant areas from erosion, maintaining erosion control material, supplementing mulch, accomplishing wound dressing, removing dead or broken tip growth by pruning, maintaining edging of beds, checking for girdling of plants and maintaining plant labels, watering, weeding, removing and replacing unhealthy plants.

3.11.2.2 Water

The plants shall be watered as necessary to maintain an adequate supply of moisture within the root zone. An adequate supply of moisture is estimated to be the equivalent of one inch of absorbed water per week delivered in the form of natural rain or augmented as required by periodic waterings. Run-off, puddling and wilting shall be prevented.

3.11.2.3 Weeding

Grass and weeds in earth saucers and plant beds shall not be allowed to reach a height of 3 inches before being completely removed, including the root growth.

3.11.2.4 Unhealthy Plants

A plant shall be considered unhealthy or dead when the main leader has died back, or 25 percent of the crown is dead. Determine the cause for an unhealthy plant. Unhealthy or dead plants shall be removed immediately and shall be replaced as soon as seasonal conditions permit.

3.11.2.5 Fertilizing

The plants shall be topdressed at least once during the period of establishment with dry fertilizer at the rate of 2 pounds per 100 square feet of plant pit or bed area or foliar feed plants with liquid fertilizer. Dry fertilizer adhering to plants shall be flushed off. The application shall be timed prior to the advent of winter dormancy.

3.11.2.6 Settlement

Topsoil shall be added to maintain grade and to maintain earth saucers. Serious settlement affecting the setting of the plant in relation to the depth at which it was grown requires replanting in accordance with paragraph INSTALLATION.

3.11.2.7 Pesticide Treatment

Treatment for diseases or pest shall be in accordance with paragraph APPLICATION OF PESTICIDE MATERIAL.

3.11.2.8 Maintenance Report

A written record shall be furnished to the Contracting Officer of the maintenance work performed, the quality of plant losses, cause for plant loss and replacements made on each site visit.

3.11.2.9 Maintenance Instructions

Written instructions shall be furnished to the Contracting Officer for year-round care of installed plants.

3.11.3 Replacement Plants

Plants shall be provided for replacement in accordance with paragraph PLANTS. Replacement plants shall be installed in accordance with paragraph INSTALLATION. No extended plant establishment period Shall be required for replacement plants. A plant will be replaced in accordance with paragraph WARRANTY.

3.12 FINAL ACCEPTANCE

3.12.1 Preliminary Inspection

Prior to the completion of the contract or the plant establishment period whichever occurs first a preliminary inspection shall be held by the Contracting Officer. Time for the inspection will be established in writing. The quantity and type of plants installed and the acceptability of the plants in accordance with the plant establishment period shall be determined.

3.12.2 Final Inspection

A final inspection shall be held by the Contracting Officer to determine that deficiencies noted in the preliminary inspection have been corrected. Time for the inspection shall be established in writing. Acceptance of the planting operation is subject to the guarantee of plant growth.

-- End of Section --

US Army Corps
of Engineers
Tulsa District

TWO COMPANY SATELLITE FIRE STATION
FORT SILL, OKLAHOMA

PN: 45652 FY: 98

Volume 3 Specifications Divisions 3 thru 10

PROFESSIONAL DESIGN GROUP
Consulting Engineers & Architects
3545 NW 58th Suite 200
Oklahoma City, Oklahoma 73112

APRIL 1998

SECTION 03100

STRUCTURAL CONCRETE FORMWORK

PART 1 GENERAL

1.1 REFERENCES

The publications listed below form a part of this specification to the extent referenced. The publications are referred to in the text by basic designation only.

ACI INTERNATIONAL (ACI)

ACI 347R (1994) Guide to Formwork for Concrete

DEPARTMENT OF COMMERCE (DOC)

DOC PS 1 (1983) Construction and Industrial Plywood

1.2 SUBMITTALS

Government approval is required for submittals with a "GA" designation; submittals having an "FIO" designation are for information only. The following shall be submitted in accordance with Section 01330 SUBMITTAL PROCEDURES:

SD-01 Data

Concrete Formwork; FIO.

Manufacturer's data including literature describing form materials, accessories, and form releasing agents.

SD-04 Drawings

Concrete Formwork; FIO.

Drawings showing details of formwork including, dimensions of fiber voids, joints, supports, studding and shoring, and sequence of form and shoring removal.

SD-06 Instructions

Form Releasing Agents; FIO.

Manufacturer's recommendation on method and rate of application of form releasing agents.

1.3 DESIGN

Formwork shall be designed in accordance with methodology of ACI 347R for anticipated loads, lateral pressures, and stresses. Forms shall be capable of producing a surface which meets the requirements of the class of finish specified in Section 03300 CAST-IN-PLACE STRUCTURAL CONCRETE. Forms shall

be capable of withstanding the pressures resulting from placement and vibration of concrete.

1.4 STORAGE AND HANDLING

Fiber voids shall be stored above ground level in a dry location. Fiber voids shall be kept dry until installed and overlaid with concrete.

PART 2 PRODUCTS

2.1 FORM MATERIALS

2.1.1 Forms For Class A Finish

Forms for Class A finished surfaces shall be plywood panels conforming to DOC PS 1, Grade B-B concrete form panels, Class I or II. Other form materials or liners may be used provided the smoothness and appearance of concrete produced will be equivalent to that produced by the plywood concrete form panels.

2.1.2 Forms For Class D Finish

Forms for Class D finished surfaces, except where concrete is placed against earth, shall be wood or steel or other approved concrete form material.

2.1.3 Form Ties

Form ties shall be factory-fabricated metal ties, shall be of the removable or internal disconnecting or snap-off type, and shall be of a design that will not permit form deflection and will not spall concrete upon removal. Solid backing shall be provided for each tie. Except where removable tie rods are used, ties shall not leave holes in the concrete surface less than 1/4 inch nor more than 1 inch deep and not more than 1 inch in diameter. Removable tie rods shall be not more than 1-1/2 inches in diameter.

2.1.4 Form Releasing Agents

Form releasing agents shall be commercial formulations that will not bond with, stain or adversely affect concrete surfaces. Agents shall not impair subsequent treatment of concrete surfaces depending upon bond or adhesion nor impede the wetting of surfaces to be cured with water or curing compounds.

2.1.5 Fiber Voids

Fiber voids shall be the product of a reputable manufacturer regularly engaged in the commercial production of fiber voids. The voids shall be constructed of double faced, corrugated fiberboard. The corrugated fiberboard shall be fabricated of wet strength paper, impregnated with paraffin, and laminated with moisture resistant adhesive, and shall have a board strength of 275 psi. Voids which are impregnated with paraffin after construction, in lieu of being constructed with paraffin impregnated fiberboard, are acceptable. Voids shall be designed to support not less than 1000 psf. To prevent separation during concrete placement fiber voids shall be assembled with steel or plastic banding at 4 feet on center maximum, or by adequate stapling or gluing as recommended by the manufacturer.

PART 3 EXECUTION

3.1 INSTALLATION

3.1.1 Formwork

Forms shall be mortar tight, properly aligned and adequately supported to produce concrete surfaces meeting the surface requirements specified in Section 03300 CAST-IN-PLACE STRUCTURAL CONCRETE and conforming to construction tolerance given in TABLE 1. Where concrete surfaces are to have a Class A finish, joints in form panels shall be arranged as approved. Where forms for continuous surfaces are placed in successive units, care shall be taken to fit the forms over the completed surface so as to obtain accurate alignment of the surface and to prevent leakage of mortar. Forms shall not be reused if there is any evidence of surface wear and tear or defects which would impair the quality of the surface. Surfaces of forms to be reused shall be cleaned of mortar from previous concreting and of all other foreign material before reuse. Form ties that are to be completely withdrawn shall be coated with a nonstaining bond breaker.

3.1.2 Fiber Voids

Voids shall be placed on a smooth firm dry bed of suitable material so as not to be displaced vertically and shall be set tight, with no buckled cartons, in order that horizontal displacement cannot take place. Each section of void shall have its ends sealed by dipping in paraffin, with any additional cutting of voids at the jobsite to be field dipped in the same type of sealer, unless liners and flutes are completely impregnated with paraffin. Prior to placing reinforcement, the entire formed area for slabs shall be covered with a 4 feet x 8 feet minimum flat sheets of fiber void corrugated fiberboard. Joints shall be sealed with a moisture resistant tape having a minimum width of 3 inches. If voids are destroyed or damaged for any reason and are not capable of supporting the design load, they shall be replaced prior to placing of concrete.

3.2 CHAMFERING

Except as otherwise shown, external corners that will be exposed shall be chamfered by moldings placed in the forms.

3.3 COATING

Forms for Class A finished surfaces shall be coated with a form releasing agent before the form or reinforcement is placed in final position. The coating shall be used as recommended in the manufacturer's printed or written instructions. Forms for Class D finished surfaces may be wet with water in lieu of coating immediately before placing concrete, except that in cold weather with probable freezing temperatures coating shall be mandatory. Surplus coating on form surfaces and coating on reinforcing steel and construction joints shall be removed before placing concrete.

3.4 REMOVAL OF FORMS

Forms shall be removed in a manner that will prevent injury to the concrete and ensure the complete safety of the structure. Formwork may be removed when the concrete has attained sufficient strength to resist damage from the removal operation but not before at least 24 hours has elapsed since concrete placement.

TABLE 1

TOLERANCES FOR FORMED SURFACES

1. Variations from the plumb:	In any 10 feet of length ----- 1/4 inch
2. Variation from the level or from the grades indicated on the drawings:	
a. Foundations	Maximum for entire length ---- 3/4 inch
b. Plinths and other conspicuous lines	In any bay or in any 20 feet of length ---------- 1/8 inch Maximum for entire length ---- 1/4 inch
3. Variation in the sizes and locations of sleeves	Minus ---------- 1/4 inch Plus ---------- 1/2 inch
4. Variation in the thickness of slabs	Minus ---------- 1/4 inch Plus ---------- 1/2 inch
5. Footings (NOT INCLUDING PLINTH):	
a. Variation of dimensions in plan	Minus ---------- 1/2 inch Plus ---------- 2 inches when formed or plus 3 inches when placed against unformed excavation
b. Misplacement of eccentricity	2 percent of the footing width in the direction of misplacement but not more than ---------- 2 inches
c. Reduction in thickness	Minus ---------- 5 percent of specified thickness
6. Plinth:	
a. Variations of dimensions in plan	Minus ---------- 1/8 inch Plus ---------- 1/4 inch
b. Misplacement of eccentricity	Not more than 1/4 inch

-- End of Section --

SECTION 03200

CONCRETE REINFORCEMENT

PART 1 GENERAL

1.1 REFERENCES

The publications listed below form a part of this specification to the extent referenced. The publications are referred to in the text by basic designation only.

ACI INTERNATIONAL (ACI)

ACI 318/318R	(1995) Building Code Requirements for Structural Concrete and Commentary

AMERICAN SOCIETY FOR TESTING AND MATERIALS (ASTM)

ASTM A 53	(1995) Pipe, Steel, Black and Hot-Dipped, Zinc-Coated Welded and Seamless
ASTM A 497	(1995) Steel Welded Wire Fabric, Deformed, for Concrete Reinforcement
ASTM A 499	(1989) Steel Bars and Shapes, Carbon Rolled from "T" Rails
ASTM A 615	(1995b) Deformed and Plain Billet-Steel Bars for Concrete Reinforcement
ASTM A 675	(1990a) Steel Bars, Carbon, Hot-Wrought, Special Quality, Mechanical Properties

CONCRETE REINFORCING STEEL INSTITUTE (CRSI)

CRSI MSP-1	(1990) Manual of Standard Practice

1.2 SUBMITTALS

Government approval is required for submittals with a "GA" designation; submittals having an "FIO" designation are for information only. The following shall be submitted in accordance with Section 01330 SUBMITTAL PROCEDURES:

SD-04 Drawings

Concrete Reinforcement System; GA.

Detail drawings showing reinforcing steel placement, schedules, sizes, grades, and splicing and bending details. Drawings shall show support details including types, sizes and spacing.

SD-13 Certificates

Reinforcing Steel; GA.

Certified copies of mill reports attesting that the reinforcing steel furnished meets the requirements specified, prior to the installation of reinforcing steel.

1.3 DELIVERY AND STORAGE

Reinforcement and accessories shall be stored off the ground on platforms, skids, or other supports.

PART 2 PRODUCTS

2.1 DOWELS

Dowels shall conform to ASTM A 675, Grade 80, or ASTM A 499. Steel pipe conforming to ASTM A 53, Schedule 80, may be used as dowels provided the ends are closed with metal or plastic inserts or with mortar.

2.2 REINFORCING STEEL

Reinforcing steel shall be deformed bars conforming to ASTM A 615, grades and sizes as indicated.

2.3 WELDED WIRE FABRIC

Welded wire fabric shall conform to ASTM A 497.

2.4 WIRE TIES

Wire ties shall be 16 gauge or heavier black annealed steel wire.

2.5 SUPPORTS

Bar supports for formed surfaces shall be designed and fabricated in accordance with CRSI MSP-1 and shall be steel or precast concrete blocks. Precast concrete blocks shall have wire ties and shall be not less than 4 inches square when supporting reinforcement on ground. Precast concrete block shall have compressive strength equal to that of the surrounding concrete. Where concrete formed surfaces will be exposed to weather or where surfaces are to be painted, steel supports within 1/2 inch of concrete surface shall be galvanized, plastic protected or of stainless steel. Concrete supports used in concrete exposed to view shall have the same color and texture as the finish surface. For slabs on grade, supports shall be precast concrete blocks, plastic coated steel fabricated with bearing plates, or specifically designed wire-fabric supports fabricated of plastic.

PART 3 EXECUTION

3.1 REINFORCEMENT

Reinforcement shall be fabricated to shapes and dimensions shown and shall conform to the requirements of ACI 318/318R. Reinforcement shall be cold bent unless otherwise authorized. Bending may be accomplished in the field or at the mill. Bars shall not be bent after embedment in concrete. Safety caps shall be placed on all exposed ends of vertical concrete reinforcement bars that pose a danger to life safety. Wire tie ends shall face away from the forms.

3.1.1 Placement

Reinforcement shall be free from loose rust and scale, dirt, oil, or other deleterious coating that could reduce bond with the concrete. Reinforcement shall be placed in accordance with ACI 318/318R at locations shown plus or minus one bar diameter. Reinforcement shall not be continuous through expansion joints and shall be as indicated through construction or contraction joints. Concrete coverage shall be as indicated or as required by ACI 318/318R. If bars are moved more than one bar diameter to avoid interference with other reinforcement, conduits or embedded items, the resulting arrangement of bars, including additional bars required to meet structural requirements, shall be approved before concrete is placed.

3.1.2 Splicing

Splices of reinforcement shall conform to ACI 318/318R and shall be made only as required or indicated. Splicing shall be by lapping. Lapped bars shall be placed in contact and securely tied or spaced transversely apart to permit the embedment of the entire surface of each bar in concrete. Lapped bars shall not be spaced farther apart than one-fifth the required length of lap or 6 inches.

3.2 WELDED-WIRE FABRIC

Welded-wire fabric shall be placed in slabs as indicated. Fabric placed in slabs on grade shall be continuous between expansion, construction, and contraction joints. Fabric placement at joints shall be as indicated. Lap splices shall be made in such a way that the overlapped area equals the distance between the outermost crosswires plus 2 inches. Laps shall be staggered to avoid continuous laps in either direction. Fabric shall be wired or clipped together at laps at intervals not to exceed 4 feet. Fabric shall be positioned by the use of supports.

3.3 DOWELS

Dowels shall be installed in slabs on grade at locations indicated and at right angles to joint being doweled. Dowels shall be accurately positioned and aligned parallel to the finished concrete surface before concrete placement. Dowels shall be rigidly supported during concrete placement. One end of dowels shall be coated with a bond breaker.

-- End of Section --

SECTION 03300

CAST-IN-PLACE STRUCTURAL CONCRETE

PART 1 GENERAL

1.1 REFERENCES

The publications listed below form a part of this specification to the extent referenced. The publications are referred to in the text by basic designation only.

ACI INTERNATIONAL (ACI)

ACI 117/117R	(1990; Errata) Standard Tolerances for Concrete Construction and Materials
ACI 211.1	(1991) Standard Practice for Selecting Proportions for Normal, Heavyweight, and Mass Concrete
ACI 214.3R	(1988) Simplified Version of the Recommended Practice for Evaluation of Strength Test Results
ACI 305R	(1991) Hot Weather Concreting
ACI 318/318R	(1995) Building Code Requirements for Reinforced Concrete and Commentary

AMERICAN ASSOCIATION OF STATE HIGHWAY AND TRANSPORTATION OFFICIALS (AASHTO)

AASHTO M 182	(1991) Burlap Cloth Made From Jute or Kenaf

AMERICAN SOCIETY FOR TESTING AND MATERIALS (ASTM)

ASTM C 31	(1991) Making and Curing Concrete Test Specimens in the Field
ASTM C 33	(1993) Concrete Aggregates
ASTM C 39	(1994) Compressive Strength of Cylindrical Concrete Specimens
ASTM C 42	(1994) Obtaining and Testing Drilled Cores and Sawed Beams of Concrete
ASTM C 78	(1994) Flexural Strength of Concrete (Using Simple Beam With Third-Point Loading)
ASTM C 94	(1996) Ready-Mixed Concrete
ASTM C 143	(1990a) Slump of Hydraulic Cement Concrete
ASTM C 150	(1995) Portland Cement
ASTM C 171	(1995) Sheet Materials for Curing Concrete

ASTM C 172	(1990) Sampling Freshly Mixed Concrete
ASTM C 192	(1990a) Making and Curing Concrete Test Specimens in the Laboratory
ASTM C 231	(1991b) Air Content of Freshly Mixed Concrete by the Pressure Method
ASTM C 260	(1995) Air-Entraining Admixtures for Concrete
ASTM C 309	(1995) Liquid Membrane-Forming Compounds for Curing Concrete
ASTM C 494	(1992) Chemical Admixtures for Concrete
ASTM C 1017	(1992) Chemical Admixtures for Use in Producing Flowing Concrete
ASTM C 1064	(1986; R 1993) Temperature of Freshly Mixed Portland Cement Concrete
ASTM C 1077	(1995a) Laboratories Testing Concrete and Concrete Aggregates for Use in Construction and Criteria for Laboratory Evaluation
ASTM C 1107	(1991a) Packaged Dry, Hydraulic-Cement Grout (Nonshrink)
ASTM D 75	(1987; R 1992) Sampling Aggregates
ASTM D 1751	(1983; R 1991) Preformed Expansion Joint Filler for Concrete Paving and Structural Construction (Nonextruding and Resilient Bituminous Types)
ASTM D 1752	(1984; R 1992) Preformed Sponge Rubber and Cork Expansion Joint Fillers for Concrete Paving and Structural Construction
ASTM E 96	(1995) Water Vapor Transmission of Materials

CORPS OF ENGINEERS (COE)

COE CRD-C 400	(1963) Requirements for Water for Use in Mixing or Curing Concrete
COE CRD-C 521	(1981) Standard Test Method for Frequency and Amplitude of Vibrators for Concrete
COE CRD-C 540	(1971; R 1981) Standard Specification for Nonbituminous Inserts for Contraction Joints in Portland Cement Concrete Airfield Pavements, Sawable Type
COE CRD-C 572	(1974) Corps of Engineers Specifications for Polyvinylchloride Waterstop

NATIONAL READY-MIXED CONCRETE ASSOCIATION (NRMCA)

NRMCA TMMB-01	(1992) Truck Mixer Agitator and Front Discharge Concrete Carrier Standards of the Truck Mixer Manufacturers Bureau
NRMCA QC 3	(1984) Quality Control Manual: Section 3, Plant Certifications Checklist: Certification of Ready Mixed Concrete Production Facilities

1.2 SUBMITTALS

Government approval is required for submittals with a "GA" designation; submittals having an "FIO" designation are for information only. The following shall be submitted in accordance with Section 01330 SUBMITTAL PROCEDURES:

SD-08 Statements

Mixture Proportions; GA.

The results of trial mixture design studies along with a statement giving the maximum nominal coarse aggregate size and the proportions of ingredients that will be used in the manufacture of each strength or class of concrete, at least 14 days prior to commencing concrete placing operations. Aggregate weights shall be based on the saturated surface dry condition. The statement shall be accompanied by test results from an approved independent commercial testing laboratory, showing that mixture design studies have been made with materials proposed for the project and that the proportions selected will produce concrete of the qualities indicated. No substitutions shall be made in the materials used in the mixture design studies without additional tests to show that the quality of the concrete is satisfactory.

SD-09 Reports

Testing and Inspection for Contractor Quality Control; GA.

Certified copies of laboratory test reports, including mill tests and all other test data, for portland cement, aggregate, admixtures, and curing compound proposed for use on this project.

1.3 GENERAL REQUIREMENTS

1.3.1 Tolerances

Except as otherwise specified herein, tolerances for concrete batching, mixture properties, and construction as well as definition of terms and application practices shall be in accordance with ACI 117/117R. Level and grade tolerance measurements of slabs shall be made as soon as possible after finishing; when forms or shoring are used, the measurements shall be made prior to removal.

1.3.1.1 Floors

For the purpose of this Section the following terminology correlation between ACI 117/117R and this Section shall apply:

Floor Profile Quality Classification From ACI 117/117R	This Section
Conventional Bullfloated	Same
Conventional Straightedged	Same
Flat	Float Finish or Trowel Finish

Levelness tolerance shall not apply where design requires floors to be sloped to drains or sloped for other reasons.

1.3.1.2 Flatness Measurement System

The flatness of the floors shall be carefully controlled and the tolerances shall be measured by the straightedge system as specified in paragraph 4.5.7 of ACI 117/117R, using a 10 foot straightedge, within 72 hours after floor slab installation and before shores and/or forms are removed. The listed tolerances shall be met at any and every location at which the straightedge can be placed.

Bullfloated	1/2 inch in 10 feet
Straightedged	1/4 inch in 10 feet
Float Finish	1/4 inch in 10 feet
Trowel Finish	1/8 inch in 10 feet

1.3.2 Strength Requirements and w/c Ratio

1.3.2.1 Strength Requirements

Compressive strength (f'c) shall be as indicated on the drawings.

a. Evaluation of Concrete Compressive Strength: Compressive strength specimens (6 by 12 inch cylinders) shall be fabricated by the Contractor and laboratory cured in accordance with ASTM C 31 and tested in accordance with ASTM C 39. The strength of the concrete will be considered satisfactory so long as the average of all sets of three consecutive test results equals or exceeds the specified compressive strength f'c and no individual test result falls below the specified strength f'c by more than 500 psi. A "test" is defined as the average of two companion cylinders, or if only one cylinder is tested, the results of the single cylinder test. Additional analysis or testing, including taking cores and/or load tests may be required at the Contractor's expense when the strength of the concrete in the structure is considered potentially deficient.

b. Investigation of Low-Strength Compressive Test Results: When any strength test of standard-cured test cylinders falls below the specified strength requirement by more than 500 psi or if tests of field-cured cylinders indicate deficiencies in protection and curing, steps shall be taken to assure that the load-carrying capacity of the structure is not jeopardized. When the strength of concrete in place is considered potentially deficient, cores shall be obtained and tested in accordance with ASTM C 42. At least three representative cores shall be taken from each member or area of concrete in place that is considered potentially deficient. The location of cores will be determined by the Contracting Officer to least impair the strength of the structure. Concrete in the area represented by the core

testing will be considered adequate if the average strength of the cores is equal to at least 85 percent of the specified strength requirement and if no single core is less than 75 percent of the specified strength requirement. Non-destructive tests (tests other than test cylinders or cores) shall not be used as a basis for acceptance or rejection. The Contractor shall perform the coring and repair the holes. Cores will be tested by the Government.

c. Load Tests. If the core tests are inconclusive or impractical to obtain or if structural analysis does not confirm the safety of the structure, load tests may be directed by the Contracting Officer in accordance with the requirements of ACI 318/318R. Concrete work evaluated by structural analysis or by results of a load test as being understrength shall be corrected in a manner satisfactory to the Contracting Officer. All investigations, testing, load tests, and correction of deficiencies shall be performed by and at the expense of the Contractor and must be approved by the Contracting Officer, except that if all concrete is found to be in compliance with the drawings and specifications, the cost of investigations, testing, and load tests will be at the expense of the Government.

1.3.2.2 Water-Cement Ratio

Maximum water-cement ratio (w/c) for concrete shall be as indicated on the structural drawings.

1.3.3 Air Entrainment

All concrete shall be air entrained to contain between 4 and 7 percent total air, except that when the nominal maximum size coarse aggregate is 3/4 inch or smaller it shall be between 4.5 and 7.5 percent. Specified air content shall be attained at point of placement into the forms. Air content shall be determined in accordance with ASTM C 231.

1.3.4 Slump

Slump of the concrete, as delivered to the point of placement into the forms, shall be as indicated on the structural drawings. Slump shall be determined in accordance with ASTM C 143.

1.3.5 Concrete Temperature

The temperature of the concrete as delivered shall not exceed 90 degrees F. When the ambient temperature during placing is 40 degrees F or less, or is expected to be at any time within 6 hours after placing, the temperature of the concrete as delivered shall be between 55 and 75 degrees F.

1.3.6 Size of Coarse Aggregate

The largest feasible nominal maximum size aggregate (NMSA) specified in paragraph AGGREGATES shall be used in each placement. However, nominal maximum size of aggregate shall not exceed any of the following: three-fourths of the minimum cover for reinforcing bars, three-fourths of the minimum clear spacing between reinforcing bars, one-fifth of the narrowest dimension between sides of forms, or one-third of the thickness of slabs or toppings.

1.3.7 Special Properties and Products

Concrete may contain admixtures other than air entraining agents, such as water reducers, superplasticizers, or set retarding agents to provide special properties to the concrete, if specified or approved. Any of these materials to be used on the project shall be used in the mix design studies.

1.4 MIXTURE PROPORTIONS

Concrete shall be composed of portland cement, aggregates, water and admixtures as specified.

1.4.1 Proportioning Studies for Normal Weight Concrete

Trial design batches, mixture proportioning studies, and testing requirements for various classes and types of concrete specified shall be the responsibility of the Contractor. Except as specified for flexural strength concrete, mixture proportions shall be based on compressive strength as determined by test specimens fabricated in accordance with ASTM C 192 and tested in accordance with ASTM C 39. Samples of all materials used in mixture proportioning studies shall be representative of those proposed for use in the project and shall be accompanied by the manufacturer's or producer's test reports indicating compliance with these specifications. Trial mixtures having proportions, consistencies, and air content suitable for the work shall be made based on methodology described in ACI 211.1, using at least three different water-cement ratios for each type of mixture, which will produce a range of strength encompassing those required for each class and type of concrete required on the project. The maximum water-cement ratios required in the paragraph Maximum Allowable w/c Ratio will be the equivalent water-cement ratio as determined by conversion from the weight ratio of water to cement by the weight equivalency method as described in ACI 211.1. Laboratory trial mixtures shall be designed for maximum permitted slump and air content. Separate sets of trial mixture studies shall be made for each combination of cementitious materials and each combination of admixtures proposed for use. No combination of either shall be used until proven by such studies. Separate trial mixture studies shall also be made for concrete for any conveying or placing method proposed which requires special properties and for concrete to be placed in unusually difficult placing locations. The temperature of concrete in each trial batch shall be reported. For each water-cement ratio, at least three test cylinders for each test age shall be made and cured in accordance with ASTM C 192. They shall be tested at 7 and 28 days in accordance with ASTM C 39. From these test results, a curve shall be plotted showing the relationship between water-cement ratio and strength for each set of trial mix studies. In addition, a curve shall be plotted showing the relationship between 7 day and 28 day strengths. Each mixture shall be designed to promote easy and suitable concrete placement, consolidation and finishing, and to prevent segregation and excessive bleeding.

1.4.2 Average Compressive Strength Required for Mixtures

The mixture proportions selected during mixture design studies shall produce a required average compressive strength (f'cr) exceeding the specified compressive strength (f'c) by the amount indicated below. This required average compressive strength, f'cr, will not be a required acceptance criteria during concrete production. However, whenever the daily average compressive strength at 28 days drops below f'cr during concrete production, or daily average 7-day strength drops below a strength correlated with the 28-day f'cr,

the mixture shall be adjusted, as approved, to bring the daily average back up to f'cr. During production, the required f'cr shall be adjusted, as appropriate, based on the standard deviation being attained on the job.

1.4.2.1 Computations from Test Records

Where a concrete production facility has test records, a standard deviation shall be established in accordance with the applicable provisions of ACI 214.3R. Test records from which a standard deviation is calculated shall represent materials, quality control procedures, and conditions similar to those expected; shall represent concrete produced to meet a specified strength or strengths (f'c) within 1,000 psi of that specified for proposed work; and shall consist of at least 30 consecutive tests. A strength test shall be the average of the strengths of two cylinders made from the same sample of concrete and tested at 28 days. Required average compressive strength f'cr used as the basis for selection of concrete proportions shall be the larger of the equations that follow using the standard deviation as determined above:

f'cr = f'c + 1.34S where units are in psi

f'cr = f'c + 2.33S - 500 where units are in psi

Where S = standard deviation

Where a concrete production facility does not have test records meeting the requirements above but does have a record based on 15 to 29 consecutive tests, a standard deviation shall be established as the product of the calculated standard deviation and a modification factor from the following table:

NUMBER OF TESTS	MODIFICATION FACTOR FOR STANDARD DEVIATION
15	1.16
20	1.08
25	1.03
30 or more	1.00

1.4.2.2 Computations without Previous Test Records

When a concrete production facility does not have sufficient field strength test records for calculation of the standard deviation, the required average strength f'cr shall be determined as follows:

a. If the specified compressive strength f'c is less than 3,000 psi,

   f'cr = f'c + 1000 psi

b. If the specified compressive strength f'c is 3,000 to 5,000 psi,

   f'cr = f'c + 1,200 psi

c. If the specified compressive strength f'c is over 5,000 psi,

   f'cr = f'c + 1,400 psi

1.5 STORAGE OF MATERIALS

Cement and other cementitious materials shall be stored in weathertight buildings, bins, or silos which will exclude moisture and contaminants and keep each material completely separated. Aggregate stockpiles shall be arranged and used in a manner to avoid excessive segregation and to prevent contamination with other materials or with other sizes of aggregates. Aggregate shall not be stored directly on ground unless a sacrificial layer is left undisturbed. Reinforcing bars and accessories shall be stored above the ground on platforms, skids or other supports. Other materials shall be stored in such a manner as to avoid contamination and deterioration. Admixtures which have been in storage at the project site for longer than 6 months or which have been subjected to freezing shall not be used unless retested and proven to meet the specified requirements. Materials shall be capable of being accurately identified after bundles or containers are opened.

1.6 GOVERNMENT ASSURANCE INSPECTION AND TESTING

Day-to day inspection and testing shall be the responsibility of the Contractor Quality Control (CQC) staff. However, representatives of the Contracting Officer can and will inspect construction as considered appropriate and will monitor operations of the Contractor's CQC staff. Government inspection or testing will not relieve the Contractor of any of his CQC responsibilities.

1.6.1 Materials

The Government will sample and test aggregates, cementitious materials, other materials, and concrete to determine compliance with the specifications as considered appropriate. The Contractor shall provide facilities and labor as may be necessary for procurement of representative test samples. Samples of aggregates will be obtained at the point of batching in accordance with ASTM D 75. Other materials will be sampled from storage at the jobsite or from other locations as considered appropriate. Samples may be placed in storage for later testing when appropriate.

1.6.2 Fresh Concrete

Fresh concrete will be sampled as delivered in accordance with ASTM C 172 and tested in accordance with these specifications, as considered necessary.

1.6.3 Hardened Concrete

Tests on hardened concrete will be performed by the Government when such tests are considered necessary.

1.6.4 Inspection

Concrete operations may be tested and inspected by the Government as the project progresses. Failure to detect defective work or material will not prevent rejection later when a defect is discovered nor will it obligate the Government for final acceptance.

PART 2 PRODUCTS

2.1 CEMENTITIOUS MATERIALS

Cementitious Materials shall be portland cement and shall conform to appropriate specifications listed below. Use of cementitious materials in concrete which will have surfaces exposed in the completed structure shall be restricted so there is no change in color, source, or type of cementitious material.

2.1.1 Portland Cement

ASTM C 150, Type I with a maximum 15 percent amount of tricalcium aluminate, or Type II.

2.1.2 High-Early-Strength Portland Cement

ASTM C 150, Type III with tricalcium aluminate limited to 5 percent. Type III cement shall be used only in isolated instances and only when approved in writing.

2.2 AGGREGATES

Aggregates shall conform to the following.

2.2.1 Fine Aggregate

Fine aggregate shall conform to the quality and gradation requirements of ASTM C 33.

2.2.2 Coarse Aggregate

Coarse aggregate shall conform to ASTM C 33, Class 5S, size designation 6 or 67.

2.3 CHEMICAL ADMIXTURES

Chemical admixtures, when required or permitted, shall conform to the appropriate specification listed. Admixtures shall be furnished in liquid form and of suitable concentration for easy, accurate control of dispensing.

2.3.1 Air-Entraining Admixture

ASTM C 260 and shall consistently entrain the air content in the specified ranges under field conditions.

2.3.2 Water-Reducing or Retarding Admixture

ASTM C 494, Type A, B, or D, except that the 6-month and 1-year compressive and flexural strength tests are waived.

2.3.3 High-Range Water Reducer

ASTM C 494, Type F or G, except that the 6-month and 1-year strength requirements are waived. The admixture shall be used only when approved in writing, such approval being contingent upon particular mixture control as

described in the Contractor's Quality Control Plan and upon performance of separate mixture design studies.

2.3.4 Other Chemical Admixtures

Chemical admixtures for use in producing flowing concrete shall comply with ASTM C 1017, Type I or II. These admixtures shall be used only when approved in writing, such approval being contingent upon particular mixture control as described in the Contractor's Quality Control Plan and upon performance of separate mixture design studies.

2.4 CURING MATERIALS

2.4.1 Impervious-Sheet

Impervious-sheet materials shall conform to ASTM C 171, type optional, except, that polyethylene sheet shall not be used.

2.4.2 Membrane-Forming Compound

Membrane-Forming curing compound shall conform to ASTM C 309, Type 1-D or 2, except that only a styrene acrylate or chlorinated rubber compound meeting Class B requirements shall be used for surfaces that are to be painted or are to receive bituminous roofing, or waterproofing, or floors that are to receive adhesive applications of resilient flooring. The curing compound selected shall be compatible with any subsequent paint, roofing, waterproofing, or flooring specified. Nonpigmented compound shall contain a fugitive dye, and shall have the reflective requirements in ASTM C 309 waived.

2.4.3 Burlap and Cotton Mat

Burlap and cotton mat used for curing shall conform to AASHTO M 182.

2.5 WATER

Water for mixing and curing shall be fresh, clean, potable, and free of injurious amounts of oil, acid, salt, or alkali, except that non-potable water may be used if it meets the requirements of COE CRD-C 400.

2.6 NONSHRINK GROUT

Nonshrink grout shall conform to ASTM C 1107, Grade A, B, or C, and shall be a commercial formulation suitable for the proposed application.

2.7 EMBEDDED ITEMS

Embedded items shall be of the size and type indicated or as needed for the application.

2.8 FLOOR HARDENER (SEALER)

Floor hardener shall be a colorless aqueous solution containing zinc silicofluoride, magnesium silicofluoride, or sodium silicofluoride. These silicofluorides can be used individually or in combination. Proprietary hardeners may be used if approved in writing by the Contracting Officer.

2.9 PERIMETER INSULATION

Perimeter insulation shall be Type A insulation specified in Section 07210 BUILDING INSULATION.

2.10 VAPOR BARRIER

Vapor barrier shall be polyethylene sheeting with a minimum thickness of 6 mils or other equivalent material having a vapor permeance rating not exceeding 0.5 perms as determined in accordance with ASTM E 96.

2.11 JOINT MATERIALS

2.11.1 Joint Fillers and Sealers

Expansion joint fillers shall be preformed materials conforming to ASTM D 1751 or ASTM D 1752. Materials for and sealing of joints shall conform to the requirements of Section 07900 JOINT SEALING.

2.11.2 Contraction Joints in Slabs

Sawable type contraction joint inserts shall conform to COE CRD-C 540. Nonsawable joint inserts shall have sufficient stiffness to permit placement in plastic concrete without undue deviation from a straight line and shall conform to the physical requirements of COE CRD-C 540, with the exception of Section 3.4 "Resistance to Sawing". Plastic inserts shall be polyvinyl chloride conforming to the materials requirements of COE CRD-C 572.

PART 3 EXECUTION

3.1 PREPARATION FOR PLACING

Before commencing concrete placement, the following shall be performed. Surfaces to receive concrete shall be clean and free from frost, ice, mud, and water. Forms shall be in place, cleaned, coated, and adequately supported, in accordance with Section 03100 STRUCTURAL CONCRETE FORMWORK. Reinforcing steel shall be in place, cleaned, tied, and adequately supported, in accordance with Section 03200 CONCRETE REINFORCEMENT. Transporting and conveying equipment shall be in-place, ready for use, clean, and free of hardened concrete and foreign material. Equipment for consolidating concrete shall be at the placing site and in proper working order. Equipment and material for curing and for protecting concrete from weather or mechanical damage shall be at the placing site, in proper working condition and in sufficient amount for the entire placement. When hot, windy conditions during concreting appear probable, equipment and material shall be at the placing site to provide windbreaks, shading, fogging, or other action to prevent plastic shrinkage cracking or other damaging drying of the concrete.

3.1.1 Foundations

3.1.1.1 Concrete on Earth Foundations

Earth (subgrade, base, or subbase courses) surfaces upon which concrete is to be placed shall be clean, damp, and free from debris, frost, ice, and standing or running water. Prior to placement of concrete, the foundation shall be well drained and shall be satisfactorily graded and uniformly compacted.

3.1.1.2 Excavated Surfaces in Lieu of Forms

Concrete for footings may be placed directly against the soil provided the earth or rock has been carefully trimmed, is uniform and stable, and meets the compaction requirements of Section 02221 EXCAVATION, FILLING, AND BACKFILLING FOR BUILDINGS. The concrete shall be placed without becoming contaminated by loose material, and the outline of the concrete shall be within the specified tolerances. All portions of foundations which will be exposed in the final construction shall be formed.

3.1.2 Preparation of Previously Placed Concrete

Concrete surfaces to which other concrete is to be bonded shall be abraded in an approved manner that will expose sound aggregate uniformly without damaging the concrete. Laitance and loose particles shall be removed. Surfaces shall be thoroughly washed and shall be moist but without free water when concrete is placed.

3.1.3 Vapor Barrier

Vapor barrier shall be provided beneath the interior on-grade concrete floor slabs. The greatest widths and lengths practicable shall be used to eliminate joints wherever possible. Joints shall be lapped a minimum of 12 inches. Torn, punctured, or damaged vapor barrier material shall be removed and new vapor barrier shall be provided prior to placing concrete. For minor repairs, patches may be made using laps of at least 12 inches. Lapped joints shall be sealed and edges patched with pressure-sensitive adhesive or tape not less than 2 inches wide and compatible with the membrane. Vapor barrier shall be placed directly on underlying subgrade, base course, or capillary water barrier, unless it consists of crushed material or large granular material which could puncture the vapor barrier. In this case, the surface shall be choked with a light layer of sand, as approved, before placing the vapor barrier. A 2 inch layer of compacted, clean concrete sand (fine aggregate) shall be placed on top of the vapor barrier before placing concrete. Concrete placement shall be controlled so as to prevent damage to the vapor barrier, or any covering sand.

3.1.4 Perimeter Insulation

Perimeter insulation shall be installed at locations indicated. Adhesive shall be used where insulation is applied to the interior surface of foundation walls and may be used for exterior application.

3.1.5 Embedded Items

Before placement of concrete, care shall be taken to determine that all embedded items are firmly and securely fastened in place as indicated on the drawings, or required. Conduit and other embedded items shall be clean and free of oil and other foreign matter such as loose coatings or rust, paint, and scale. Voids in sleeves, inserts, and anchor slots shall be filled temporarily with readily removable materials to prevent the entry of concrete into voids. Welding shall not be performed on embedded metals within 1 feet of the surface of the concrete. Tack welding shall not be performed on or to embedded items.

3.2 CONCRETE PRODUCTION

Batch-type equipment shall be used for producing concrete. Ready-mixed concrete shall be batched, mixed, and transported in accordance with ASTM C 94, except as otherwise specified. Truck mixers, agitators, and nonagitating transporting units shall comply with NRMCA TMMB-01. Ready-mix plant equipment and facilities shall be certified in accordance with NRMCA QC 3. Approved batch tickets shall be furnished for each load of ready-mixed concrete.

3.3 TRANSPORTING CONCRETE TO PROJECT SITE

Concrete shall be transported to the placing site in truck mixers.

3.4 CONVEYING CONCRETE ON SITE

Concrete shall be conveyed from mixer to forms as rapidly as possible and within the time interval specified by methods which will prevent segregation or loss of ingredients using following equipment. Conveying equipment shall be cleaned before each placement.

3.4.1 Chutes

When concrete can be placed directly from a truck mixer the chutes normally attached to this equipment by the manufacturer may be used. A discharge deflector shall be used when required by the Contracting Officer. Separate chutes and other similar equipment will not be permitted for conveying concrete.

3.4.2 Concrete Pumps

Concrete may be conveyed by positive displacement pump when approved. The pumping equipment shall be piston or squeeze pressure type; pneumatic placing equipment shall not be used. The pipeline shall be rigid steel pipe or heavy-duty flexible hose. The inside diameter of the pipe shall be at least 3 times the nominal maximum-size coarse aggregate in the concrete mixture to be pumped but not less than 4 inches. Aluminum pipe shall not be used.

3.5 PLACING CONCRETE

Mixed concrete shall be discharged within 1-1/2 hours or before the mixer drum has revolved 300 revolutions, whichever comes first after the introduction of the mixing water to the cement and aggregates. When the concrete temperature exceeds 85 degrees F, the time shall be reduced to 45 minutes. Concrete shall be placed within 15 minutes after it has been discharged from the transporting unit. Concrete shall be handled from mixer or transporting unit to forms in a continuous manner until the approved unit of operation is completed. Adequate scaffolding, ramps and walkways shall be provided so that personnel and equipment are not supported by in-place reinforcement. Placing will not be permitted when the sun, heat, wind, or limitations of facilities furnished by the Contractor prevent proper consolidation, finishing and curing. Sufficient placing capacity shall be provided so that concrete can be kept free of cold joints.

3.5.1 Depositing Concrete

Concrete shall be deposited as close as possible to its final position in the forms, and there shall be no vertical drop greater than 5 feet. Depositing of

the concrete shall be so regulated that it will be effectively consolidated in horizontal layers not more than 12 inches thick, except that all slabs shall be placed in a single layer. Concrete to receive other construction shall be screeded to the proper level. Concrete shall be deposited continuously in one layer or in layers so that fresh concrete is deposited on in-place concrete that is still plastic. Fresh concrete shall not be deposited on concrete that has hardened sufficiently to cause formation of seams or planes of weakness within the section. Concrete that has surface dried, partially hardened, or contains foreign material shall not be used. When temporary spreaders are used in the forms, the spreaders shall be removed as their service becomes unnecessary.

3.5.2 Consolidation

Immediately after placing, each layer of concrete shall be consolidated by internal vibrators. The vibrators shall at all times be adequate in effectiveness and number to properly consolidate the concrete; a spare vibrator shall be kept at the jobsite during all concrete placing operations. The vibrators shall have a frequency of not less than 10,000 vibrations per minute, an amplitude of at least 0.025 inch, and the head diameter shall be appropriate for the structural member and the concrete mixture being placed. Vibrators shall be inserted vertically at uniform spacing over the area of placement. The distance between insertions shall be approximately 1-1/2 times the radius of action of the vibrator so that the area being vibrated will overlap the adjacent just-vibrated area by a reasonable amount. The vibrator shall penetrate rapidly to the bottom of the layer and at least 6 inches into the preceding layer if there is such. Vibrator shall be held stationary until the concrete is consolidated and then vertically withdrawn slowly while operating. Form vibrators shall not be used. Vibrators shall not be used to move concrete within the forms. Frequency and amplitude of vibrators shall be determined in accordance with COE CRD-C 521. Grate tampers ("jitterbugs") shall not be used.

3.5.3 Cold Weather Requirements

Special protection measures, approved by the Contracting Officer, shall be used if freezing temperatures are anticipated before the expiration of the specified curing period. The ambient temperature of the air where concrete is to be placed and the temperature of surfaces to receive concrete shall be not less than 40 degrees F. The temperature of the concrete when placed shall be not less than 50 degrees F nor more than 75 degrees F. Heating of the mixing water or aggregates will be required to regulate the concrete placing temperature. Materials entering the mixer shall be free from ice, snow, or frozen lumps. Salt, chemicals or other materials shall not be incorporated in the concrete to prevent freezing. Calcium chloride shall not be used.

3.5.4 Hot Weather Requirements

When the ambient temperature during concrete placing is expected to exceed 85 degrees F, the concrete shall be placed and finished with procedures previously submitted and as specified herein. The concrete temperature at time of delivery to the forms shall not exceed the temperature shown in the table below when measured in accordance with ASTM C 1064. Cooling of the mixing water or aggregates or placing concrete in the cooler part of the day may be required to obtain an adequate placing temperature. A retarder may be used, as approved, to facilitate placing and finishing. Steel forms and reinforcements shall be cooled as approved prior to concrete placement when

steel temperatures are greater than 120 degrees F. Conveying and placing equipment shall be cooled if necessary to maintain proper concrete-placing temperature.

Maximum Allowable Concrete Placing Temperature

Relative Humidity, Percent, During Time of Concrete Placement	Maximum Allowable Concrete Temperature Degrees
Greater than 60	90 F
40-60	85 F
Less than 40	80 F

3.5.5 Prevention of Plastic Shrinkage Cracking

During hot weather with low humidity, and particularly with appreciable wind, as well as interior placements when space heaters produce low humidity, the Contractor shall be alert to the tendency for plastic shrinkage cracks to develop and shall institute measures to prevent this. Particular care shall be taken if plastic shrinkage cracking is potentially imminent and especially if it has developed during a previous placement. Periods of high potential for plastic shrinkage cracking can be anticipated by use of Fig. 2.1.5 of ACI 305R. In addition the concrete placement shall be further protected by erecting shades and windbreaks and by applying fog sprays of water, sprinkling, ponding or wet covering. Plastic shrinkage cracks that occur shall be filled by injection of epoxy resin as directed, after the concrete hardens. Plastic shrinkage cracks shall never be troweled over or filled with slurry.

3.5.6 Placing Concrete in Congested Areas

Special care shall be used to ensure complete filling of the forms, elimination of all voids, and complete consolidation of the concrete when placing concrete in areas congested with reinforcing bars, embedded items, waterstops and other tight spacing. An appropriate concrete mixture shall be used, and the nominal maximum size of aggregate (NMSA) shall meet the specified criteria when evaluated for the congested area. Vibrators with heads of a size appropriate for the clearances available shall be used, and the consolidation operation shall be closely supervised to ensure complete and thorough consolidation at all points. Where necessary, splices of reinforcing bars shall be alternated to reduce congestion. Where two mats of closely spaced reinforcing are required, the bars in each mat shall be placed in matching alignment to reduce congestion.

3.5.7 Placing Flowable Concrete

If a plasticizing admixture conforming to ASTM C 1017 is used or if a Type F or G high range water reducing admixture is permitted to increase the slump, the concrete shall meet all requirements of paragraph GENERAL REQUIREMENTS in PART 1. Extreme care shall be used in conveying and placing the concrete to avoid segregation. Consolidation and finishing shall meet all requirements of paragraphs Placing Concrete, Finishing Formed Surfaces, and Finishing Unformed Surfaces. No relaxation of requirements to accommodate flowable concrete will be permitted.

3.6 JOINTS

Joints shall be located and constructed as indicated or approved. Joints not indicated on the drawings shall be located and constructed to minimize the impact on the strength of the structure. In general, such joints shall be located near the middle of the spans of supported slabs, beams, and girders unless a beam intersects a girder at this point, in which case the joint in the girder shall be offset a distance equal to twice the width of the beam. Joints in walls and columns shall be at the underside of floors, slabs, beams, or girders and at the tops of footings or floor slabs, unless otherwise approved. Joints shall be perpendicular to the main reinforcement. All reinforcement shall be continued across joints; except that reinforcement or other fixed metal items shall not be continuous through expansion joints, or through construction or contraction joints in slabs on grade. Reinforcement shall be 2 inches clear from each joint. Except where otherwise indicated, construction joints between interior slabs on grade and vertical surfaces shall consist of 30 pound asphalt-saturated felt, extending for the full depth of the slab. The perimeters of the slabs shall be free of fins, rough edges, spalling, or other unsightly appearance. Reservoir for sealant for construction and contraction joints in slabs shall be formed to the dimensions shown on the drawings by removing snap-out joint-forming inserts, by sawing sawable inserts, or by sawing to widen the top portion of sawed joints. Joints to be sealed shall be cleaned and sealed as indicated and in accordance with Section 07920 JOINT SEALING.

3.6.1 Construction Joints

Construction joints will be permitted only when an emergency condition forces cessation of placing operations or as specifically approved by the Contracting Officer. In either case the location must be approved by the Contracting Officer. Concrete shall be placed continuously so that each unit is monolithic in construction. Fresh concrete shall not be placed against adjacent hardened concrete until it is at least 24 hours old. Construction joints shall be located as indicated or approved. Where concrete work is interrupted by weather, end of work shift or other similar type of delay, location and type of construction joint shall be subject to approval of the Contracting Officer. Unless otherwise indicated and except for slabs on grade, reinforcing steel shall extend through construction joints. Construction joints in slabs on grade shall be keyed or doweled as shown.

3.6.2 Contraction Joints in Slabs on Grade

Contraction joints shall be located and detailed as shown on the drawings. Contraction Joints shall be produced by forming a weakened plane in the concrete slab by use of rigid inserts impressed in the concrete during placing operations, use of snap-out plastic joint forming inserts or sawing a continuous slot with a concrete saw. Regardless of method used to produce the weakened plane, it shall be 1/4 the depth of the slab thickness and between 1/8 and 1/4 inch wide. For saw-cut joints, cutting shall be timed properly with the set of the concrete. Cutting shall be started as soon as the concrete has hardened sufficiently to prevent ravelling of the edges of the saw cut. Cutting shall be completed before shrinkage stresses become sufficient to produce cracking. Reservoir for joint sealant shall be formed as previously specified.

3.6.3 Expansion Joints

Sealing of expansion joints shall conform to the requirements of Section 07900 JOINT SEALING.

3.6.4 Dowels and Tie Bars

Dowels and tie bars shall be installed at the locations shown on the drawings and to the details shown, using materials and procedures specified in Section 03200 CONCRETE REINFORCEMENT and herein. Conventional smooth "paving" dowels shall be installed in slabs using approved methods to hold the dowel in place during concreting within a maximum alignment tolerance of 1/8 inch in 12 inches. "Structural" type deformed bar dowels, or tie bars, shall be installed to meet the specified tolerances. Care shall be taken during placing adjacent to and around dowels and tie bars to ensure there is no displacement of the dowel or tie bar and that the concrete completely embeds the dowel or tie bar and is thoroughly consolidated.

3.7 FINISHING FORMED SURFACES

Forms, form materials, and form construction are specified in Section 03100 STRUCTURAL CONCRETE FORMWORK. Finishing of formed surfaces shall be as specified herein. Unless another type of architectural or special finish is specified, surfaces shall be left with the texture imparted by the forms except that defective surfaces shall be repaired. Unless painting of surfaces is required, uniform color of the concrete shall be maintained by use of only one mixture without changes in materials or proportions for any structure or portion of structure that requires a Class A finish. Except for major defects, as defined hereinafter, surface defects shall be repaired as specified herein within 24 hours after forms are removed. Repairs of the so-called "plaster-type" will not be permitted in any location. Tolerances of formed surfaces shall conform to the requirements of ACI 117/117R. These tolerances apply to the finished concrete surface, not to the forms themselves; forms shall be set true to line and grade. Form tie holes requiring repair and other defects whose depth is at least as great as their surface diameter shall be repaired as specified in paragraph Damp-Pack Mortar Repair. Defects whose surface diameter is greater than their depth shall be repaired as specified in paragraph Repair of Major Defects. Repairs shall be finished flush with adjacent surfaces and with the same surface texture. The cement used for all repairs shall be a blend of job cement with white cement proportioned so that the final color after curing and aging will be the same as the adjacent concrete. Concrete with excessive honeycomb, or other defects which affect the strength of the member, will be rejected. Repairs shall be demonstrated to be acceptable and free from cracks or loose or drummy areas at the completion of the contract and, for Class A Finishes, shall be inconspicuous. Repairs not meeting these requirements will be rejected and shall be replaced.

3.7.1 Class A Finish

Class A finish is required where indicated on the drawings. Fins, ravelings, and loose material shall be removed, all surface defects over 1/2 inch in diameter or more than 1/2 inch deep, shall be repaired and, except as otherwise indicated or as specified in Section 03100 STRUCTURAL CONCRETE FORMWORK, holes left by removal of form ties shall be reamed and filled. Defects more than 1/2 inch in diameter shall be cut back to sound concrete,

but in all cases at least 1 inch deep. Metal tools shall not be used to finish repairs in Class A surfaces.

3.7.2 Class D Finish

Class D finish is required at all formed surfaces not indicated to be Class A or allowed to be earth formed. Fins ravelings, and loose material shall be removed, and, except as otherwise indicated or as specified in Section 03100 STRUCTURAL CONCRETE FORMWORK, holes left by removal of form ties shall be reamed and filled. Honeycomb and other defects more than 1/2 inch deep or more than 2 inches in diameter shall be repaired. Defects more than 2 inches in diameter shall be cut back to sound concrete, but in all cases at least 1 inch deep.

3.7.2.1 Smooth Finish

After other concrete construction is complete in each overall separate contiguous area of the structure, smooth finish shall be applied to exposed portions of the concrete plinths. A mortar mix consisting of one part portland cement and two parts well-graded sand passing a No. 30 sieve, with water added to give the consistency of thick paint, shall be used. White cement shall be used to replace part or all of the job cement to produce an approved color, which shall be uniform throughout the surfaces of the structure. After the surface has been thoroughly wetted and allowed to approach surface dryness, the mortar shall be vigorously applied to the area by clean burlap pads or by cork or wood-floating, to completely fill all surface voids. Excess grout shall be scraped off with a trowel. As soon as it can be accomplished without pulling the mortar from the voids, the area shall be rubbed with burlap pads having on their surface the same sand-cement mix specified above but without any mixing water, until all of the visible grout film is removed. The burlap pads used for this operation shall be stretched tightly around a board to prevent dishing the mortar in the voids. The finish of any area shall be completed in the same day, and the limits of a finished area shall be made at natural breaks in the surface. The surface shall be continuously moist cured for 48 hours commencing immediately after finishing operations in each area. The temperature of the air adjacent to the surface shall be not less than 50 degrees F for 24 hours prior to, and 48 hours after, the application. In hot, dry weather the smooth finish shall be applied in shaded areas or at night, and shall never be applied when there is significant hot, dry wind.

3.8 REPAIRS

3.8.1 Damp-Pack Mortar Repair

Form tie holes requiring repair and other defects whose depth is at least as great as their surface diameter but not over 4 inches shall be repaired by the damp-pack mortar method. Form tie holes shall be reamed and other similar defects shall be cut out to sound concrete. The void shall then be thoroughly cleaned, thoroughly wetted, brush-coated with a thin coat of neat cement grout and filled with mortar. Mortar shall be a stiff mix of 1 part portland cement to 2 parts fine aggregate passing the No. 16 mesh sieve, and minimum amount of water. Only sufficient water shall be used to produce a mortar which, when used, will stick together on being molded into a ball by a slight pressure of the hands and will not exude water but will leave the hands damp. Mortar shall be mixed and allowed to stand for 30 to 45 minutes before use with remixing performed immediately prior to use. Mortar shall be thoroughly

tamped in place in thin layers using a hammer and hardwood block. Holes passing entirely through walls shall be completely filled from the inside face by forcing mortar through to the outside face. All holes shall be packed full. Damp-pack repairs shall be moist cured for at least 48 hours.

3.8.2 Repair of Major Defects

Major defects will be considered to be those more than 1/2 inch deep or, for Class A finishes, more than 1/2 inch in diameter and, for Class D finishes, more than 2 inches in diameter. Also included are any defects of any kind whose depth is over 4 inches or whose surface diameter is greater than their depth. Major defects shall be repaired as specified below.

3.8.2.1 Surface Application of Mortar Repair

Defective concrete shall be removed, and removal shall extend into completely sound concrete. Approved equipment and procedures which will not cause cracking or microcracking of the sound concrete shall be used. If reinforcement is encountered, concrete shall be removed so as to expose the reinforcement for at least 2 inches on all sides. All such defective areas greater than 12 square inches shall be outlined by saw cuts at least 1 inch deep. Defective areas less than 12 square inches shall be outlined by a 1 inch deep cut with a core drill in lieu of sawing. All saw cuts shall be straight lines in a rectangular pattern in line with the formwork panels. After concrete removal, the surface shall be thoroughly cleaned by high pressure washing to remove all loose material. Surfaces shall be kept continually saturated for the first 12 of the 24 hours immediately before placing mortar and shall be damp but not wet at the time of commencing mortar placement. Mortar shall be hand-placed. The edges of the cut shall be perpendicular to the surface of the concrete. The prepared area shall be brush-coated with a thin coat of neat cement grout. The repair shall then be made using a stiff mortar, preshrunk by allowing the mixed mortar to stand for 30 to 45 minutes and then remixed, thoroughly tamped into place in thin layers. The Contractor shall test each repair area for drumminess by firm tapping with a hammer and shall inspect for cracks, both in the presence of the Contracting Officer's representative, immediately before completion of the contract, and shall replace any showing drumminess or cracking. All surface applied mortar repairs shall be continuously moist cured for at least 7 days. Moist curing shall consist of several layers of saturated burlap applied to the surface immediately after placement is complete and covered with polyethylene sheeting, all held closely in place by a sheet of plywood or similar material rigidly braced against it. Burlap shall be kept continually wet.

3.9 FINISHING UNFORMED SURFACES

The finish of all unformed surfaces shall meet the requirements of paragraph Tolerances in PART 1, when tested as specified herein.

3.9.1 General

The ambient temperature of spaces adjacent to unformed surfaces being finished and of the base on which concrete will be placed shall be not less than 50 degrees F. In hot weather all requirements of paragraphs Hot Weather Requirements and Prevention of Plastic Shrinkage Cracking shall be met. Unformed surfaces that are not to be covered by additional concrete or backfill shall have a float finish, with additional finishing as specified

below, and shall be true to the elevation shown on the drawings. Surfaces to receive additional concrete or backfill shall be brought to the elevation shown on the drawings, properly consolidated, and left true and regular. Unless otherwise shown on the drawings, exterior surfaces shall be sloped for drainage, as directed. Where drains are provided, interior floors shall be evenly sloped to the drains. Joints shall be carefully made with a jointing or edging tool. The finished surfaces shall be protected from stains or abrasions. Grate tampers or "jitterbugs" shall not be used for any surfaces. The dusting of surfaces with dry cement or other materials or the addition of any water during finishing shall not be permitted. If bleedwater is present prior to finishing, the excess water shall be carefully dragged off or removed by absorption with porous materials such as burlap. During finishing operations, extreme care shall be taken to prevent over finishing or working water into the surface; this can cause "crazing" (surface shrinkage cracks which appear after hardening) of the surface. Any slabs with surfaces which exhibit significant crazing shall be removed and replaced. During finishing operations, surfaces shall be checked with a 10 foot straightedge, applied in both directions at regular intervals while the concrete is still plastic, to detect high or low areas.

3.9.2 Rough Slab Finish

As a first finishing operation for unformed surfaces and as final finish for slabs to receive mortar setting beds, the surface shall receive a rough slab finish prepared as follows. The concrete shall be uniformly placed across the slab area, consolidated as previously specified, and then screeded with straightedge strikeoffs immediately after consolidation to bring the surface to the required finish level with no coarse aggregate visible. Side forms and screed rails shall be provided, rigidly supported, and set to exact line and grade. Allowable tolerances for finished surfaces apply only to the hardened concrete, not to forms or screed rails. Forms and screed rails shall be set true to line and grade. "Wet screeds" shall not be used.

3.9.3 Floated Finish

Slabs to receive more than a rough slab finish shall next be given a wood float finish. The screeding shall be followed immediately by darbying or bull floating before bleeding water is present, to bring the surface to a true, even plane. Then, after the concrete has stiffened so that it will withstand a man's weight without imprint of more than 1/4 inch and the water sheen has disappeared, it shall be floated to a true and even plane free of ridges. Floating shall be performed by use of suitable hand floats or power driven equipment. Sufficient pressure shall be used on the floats to bring a film of moisture to the surface. Hand floats shall be made of wood, magnesium, or aluminum. Care shall be taken to prevent over-finishing or incorporating water into the surface.

3.9.4 Troweled Finish

All interior floor slabs except the floor of the Apparatus Bay shall be given a trowel finish. After floating is complete and after the surface moisture has disappeared, unformed surfaces shall be steel-troweled to a smooth, even, dense finish, free from blemishes including trowel marks. In lieu of hand finishing, an approved power finishing machine may be used in accordance with the directions of the machine manufacturer. Additional trowelings shall be performed, either by hand or machine until the surface has been troweled 2 times, with waiting period between each. Care shall be taken to prevent

blistering and if such occurs, troweling shall immediately be stopped and operations and surfaces corrected. A final hard steel troweling shall be done by hand, with the trowel tipped, and using hard pressure, when the surface is at a point that the trowel will produce a ringing sound. The finished surface shall be thoroughly consolidated and shall be essentially free of trowel marks and be uniform in texture and appearance. The concrete mixture used for troweled finished areas shall be adjusted, if necessary, in order to provide sufficient fines (cementitious material and fine sand) to finish properly.

3.9.5 Broom Finish

The floor slab in the Apparatus Bay, exterior patio slab, sidewalks, stoops, porches, and equipment pads shall be given a broomed finish. After floating, the surface shall be lightly steel troweled, and then carefully scored by pulling a hair push-type broom across the surface to produce a light broom finish. Brooming shall be transverse to traffic or at right angles to the slope of the slab. After the end of the curing period, the surface shall be vigorously broomed with a coarse fiber broom to remove all loose or semi-detached particles.

3.9.6 Two-Course Floor Construction

Areas indicated on the drawings to receive thick set quarry or ceramic tile by a Bid Option shall have floors constructed with two-course construction if the Bid Option is not accepted by the Government. Two-course floor shall be constructed by placing a bonded topping on the thoroughly hardened concrete base slab which has been left with a rough slab finish left below final grade as shown on the drawings. Topping shall be applied at an approved time late in the contract period. The floor topping mixture shall have a specified compressive strength of 5000 psi at 28 days, a 2 inch maximum slump, 1/2 inch maximum size coarse aggregate, and shall be proportioned to obtain required finishability. The surface of the base slab shall be thoroughly cleaned by sandblasting or high-pressure waterjet immediately before placing topping. The temperature of the fresh concrete topping shall not vary more than 10 degrees F plus or minus from the temperature of the base slab. The ambient temperature of the space adjacent to the concrete placement and of the base slab shall be between 50 and 90 degrees F. The base slab shall be kept continuously wet for the first 12 hours during the 24 hour period immediately prior to placing the finished floor. After all free water has evaporated or has been removed from the surface, a grout shall be scrubbed in. The grout shall be a 1:1 mixture of portland cement and sand passing the No. 8 sieve mixed to a creamlike consistency. The grout shall be scrubbed into the surface just ahead of the concrete topping placing operation. While the grout is still damp, the top course shall be spread and screeded and darbied or bull floated. When the surface moisture has disappeared, the surface shall then be floated with disc-type power float with integral impact mechanism followed by a minimum of two power trowelings. Trowel marks left by the machine shall be removed by a final, hard steel troweling by hand. Joints shall be formed to match those in the base slab. Concrete shall be maintained in a moist condition and shall be protected against rapid temperature change, mechanical injury, and injury from rain or water, for a curing period of not less than 10 days. Concrete shall be maintained in a moist condition at temperatures above 50 and below 90 degrees F throughout the specified curing period. Concrete shall be protected from a temperature change greater than 5 degrees F per hour and from rapid drying for the first 24 hours following the removal of temperature protection. Curing activities shall be started immediately as soon as free water has disappeared from the surface of the concrete after

placing and finishing. Curing shall be moist curing accomplished by the following method. Surfaces shall be covered with a double layer of burlap, wetted before placing, and overlapped at least 6 inches. Burlap shall be kept continually wet and in intimate contact with the surface. Burlap shall be kept covered with a polyethylene sheeting at least 4 mils thick. All traffic shall be kept from the topping during the curing period.

3.10 FLOOR HARDENER (SEALER)

All exposed interior floor slabs shall be treated with floor hardener. Floor hardener shall be applied after the concrete has been cured and then air dried for 28 days. Three coats shall be applied, each the day after the preceding coat was applied. For the first application, one pound of the silocofluoride shall be dissolved in one gallon of water. For subsequent applications, the solution shall be two pounds of silicofluoride to each gallon of water. Floor should be mopped with clear water shortly after the preceding application has dried to remove encrusted salts. Proprietary hardeners shall be applied in accordance with the manufacturer's instructions. During application, area should be well ventilated. Precautions shall be taken when applying silicofluorides due to the toxicity of the salts. Any compound that contacts glass or aluminum should be immediately removed with clear water.

3.11 EXTERIOR SLAB AND RELATED ITEMS

3.11.1 Pavements

Pavements are specified in other sections of the specifications.

3.11.2 Sidewalks, Patio Slab, and Equipment Pads

Concrete shall be of the indicated thickness. Contraction joints shall be provided at 5 feet spaces unless otherwise indicated. Contraction joints shall be cut 1 inch deep with a jointing tool after the surface has been finished. Transverse expansion joints 1/2 inch thick shall be provided at changes in direction and where slabs abut curbs, steps, rigid pavement, or other similar structures. Slabs shall be given a broomed finish. A transverse slope of 1/4 inch per foot shall be provided, unless otherwise indicated. Variations in cross section shall be limited to 1/4 inch in 5 feet.

3.12 CURING AND PROTECTION

3.12.1 General

Concrete shall be cured by an approved method for a period of seven days.

Immediately after placement, concrete shall be protected from premature drying, extremes in temperatures, rapid temperature change, mechanical injury and damage from rain and flowing water for the duration of the curing period. Air and forms in contact with concrete shall be maintained at a temperature above 50 degrees F for the first 3 days and at a temperature above 32 degrees F for the remainder of the specified curing period. Exhaust fumes from combustion heating units shall be vented to the outside of the enclosure, and heaters and ducts shall be placed and directed so as not to cause areas of overheating and drying of concrete surfaces or to create fire hazards. Materials and equipment needed for adequate curing and protection shall be available and at the site prior to placing concrete. No fire or excessive

heat, including welding, shall be permitted near or in direct contact with the concrete at any time. Except as otherwise permitted by paragraph Membrane Forming Curing Compounds, moist curing shall be provided for any areas to receive floor hardener, any paint or other applied coating, or to which other concrete is to be bonded. Except for plastic coated burlap, impervious sheeting alone shall not be used for curing.

3.12.2 Moist Curing

Concrete to be moist-cured shall be maintained continuously wet for the entire curing period, commencing immediately after finishing. If water or curing materials used stain or discolor concrete surfaces which are to be permanently exposed, the concrete surfaces shall be cleaned as approved. When wooden forms are left in place during curing, they shall be kept wet at all times. If steel forms are used in hot weather, nonsupporting vertical forms shall be broken loose from the concrete soon after the concrete hardens and curing water continually applied in this void. If the forms are removed before the end of the curing period, curing shall be carried out as on unformed surfaces, using suitable materials. Surfaces shall be cured by ponding, by continuous sprinkling, by continuously saturated burlap or cotton mats, or by continuously saturated plastic coated burlap. Burlap and mats shall be clean and free from any contamination and shall be completely saturated before being placed on the concrete. The Contractor shall have an approved work system to ensure that moist curing is continuous 24 hours per day.

3.12.3 Membrane Forming Curing Compounds

Membrane forming curing compounds shall be used only on exterior slab surfaces. Exterior concrete slabs may be cured with a nonpigmented curing compound containing a fugitive dye in lieu of moist curing. Membrane curing shall not be used on surfaces that are to receive any subsequent treatment depending on adhesion or bonding to the concrete, including surfaces to which a smooth finish is to be applied or other concrete to be bonded. Membrane curing compound shall not be used on surfaces that are maintained at curing temperatures with free steam. Curing compound shall be applied to formed surfaces immediately after the forms are removed and prior to any patching or other surface treatment except the cleaning of loose sand, mortar, and debris from the surface. All surfaces shall be thoroughly moistened with water. Curing compound shall be applied to slab surfaces as soon as the bleeding water has disappeared, with the tops of joints being temporarily sealed to prevent entry of the compound and to prevent moisture loss during the curing period. The curing compound shall be applied in a two-coat continuous operation by approved motorized power-spraying equipment operating at a minimum pressure of 75 psi, at a uniform coverage of not more than 400 square feet per gallon for each coat, and the second coat shall be applied perpendicular to the first coat. Concrete surfaces which have been subjected to rainfall within 3 hours after curing compound has been applied shall be resprayed by the method and at the coverage specified. Surfaces on which clear compound is used shall be shaded from direct rays of the sun for the first 3 days. Surfaces coated with curing compound shall be kept free of foot and vehicular traffic, and from other sources of abrasion and contamination during the curing period.

3.12.4 Impervious Sheeting

Horizontal concrete surfaces may be cured using impervious sheets. However, except for plastic coated burlap, impervious sheeting alone shall not be used

for curing. Impervious-sheet curing shall only be used on horizontal or nearly horizontal surfaces. Surfaces shall be thoroughly wetted and be completely covered with the sheeting. Sheeting shall be at least 18 inches wider than the concrete surface to be covered. Covering shall be laid with light-colored side up. Covering shall be lapped not less than 12 inches and securely weighted down or shall be lapped not less than 4 inches and taped to form a continuous cover with completely closed joints. The sheet shall be weighted to prevent displacement so that it remains in contact with the concrete during the specified length of curing. Coverings shall be folded down over exposed edges of slabs and secured by approved means. Sheets shall be immediately repaired or replaced if tears or holes appear during the curing period.

3.12.5 Ponding or Immersion

Concrete shall be continually immersed throughout the curing period. Water shall not be more than 20 degrees F less than the temperature of the concrete.

3.12.6 Cold Weather Curing and Protection

When the daily ambient low temperature is less than 32 degrees F the temperature of the concrete shall be maintained above 40 degrees F for the first seven days after placing. During the period of protection removal, the air temperature adjacent to the concrete surfaces shall be controlled so that concrete near the surface will not be subjected to a temperature differential of more than 25 degrees F as determined by suitable temperature measuring devices furnished by the Government, as required, and installed adjacent to the concrete surface and 2 inches inside the surface of the concrete. The installation of the thermometers shall be made by the Contractor as directed.

3.13 SETTING BASE PLATES AND BEARING PLATES

After being properly positioned, column base plates, bearing plates for beams and similar structural members, and machinery and equipment base plates shall be set to the proper line and elevation with damp-pack bedding mortar, except where nonshrink grout is indicated. The thickness of the mortar or grout shall be approximately 1/24 the width of the plate, but not less than 3/4 inch. Concrete and metal surfaces in contact with grout shall be clean and free of oil and grease, and concrete surfaces in contact with grout shall be damp and free of laitance when grout is placed. Nonshrink grout shall be used for column bases.

3.13.1 Damp-Pack Bedding Mortar

Damp-pack bedding mortar shall consist of 1 part cement and 2-1/2 parts fine aggregate having water content such that a mass of mortar tightly squeezed in the hand will retain its shape but will crumble when disturbed. The space between the top of the concrete and bottom of the bearing plate or base shall be packed with the bedding mortar by tamping or ramming with a bar or rod until it is completely filled.

3.13.2 Nonshrink Grout

Nonshrink grout shall be a ready-mixed material requiring only the addition of water. Water content shall be the minimum that will provide a flowable mixture and completely fill the space to be grouted without segregation, bleeding, or reduction of strength.

3.13.2.1 Mixing and Placing of Nonshrink Grout

Mixing and placing shall be in conformance with the material manufacturer's instructions and as specified therein. Ingredients shall be thoroughly dry-mixed before adding water. After adding water, the batch shall be mixed for 3 minutes. Batches shall be of size to allow continuous placement of freshly mixed grout. Grout not used within 30 minutes after mixing shall be discarded. The space between the top of the concrete or machinery-bearing surface and the plate shall be filled solid with the grout. Forms shall be of wood or other equally suitable material for completely retaining the grout on all sides and on top and shall be removed after the grout has set. The placed grout shall be carefully worked by rodding or other means to eliminate voids; however, overworking and breakdown of the initial set shall be avoided. Grout shall not be retempered or subjected to vibration from any source. Where clearances are unusually small, placement shall be under pressure with a grout pump. Temperature of the grout, and of surfaces receiving the grout, shall be maintained at 65 to 85 degrees F until after setting.

3.13.2.2 Treatment of Exposed Surfaces

For metal-oxidizing nonshrink grout, exposed surfaces shall be cut back 1 inch and immediately covered with a parge coat of mortar consisting of 1 part portland cement and 2-1/2 parts fine aggregate by weight, with sufficient water to make a plastic mixture. The parge coat shall have a smooth finish. For other mortars or grouts, exposed surfaces shall have a smooth-dense finish and be left untreated. Curing shall comply with paragraph CURING AND PROTECTION.

3.14 TESTING AND INSPECTION FOR CONTRACTOR QUALITY CONTROL

The Contractor shall perform the inspection and tests described below and, based upon the results of these inspections and tests, shall take the action required and shall submit specified reports. When, in the opinion of the Contracting Officer, the concreting operation is out of control, concrete placement shall cease and the operation shall be corrected. The laboratory performing the tests shall be onsite and shall conform with ASTM C 1077. Materials may be subjected to check testing by the Government from samples obtained at the manufacturer, at transfer points, or at the project site. The Government may inspect the laboratory, equipment, and test procedures prior to start of concreting operations and at periodic intervals thereafter for conformance with ASTM C 1077.

3.14.1 Quality of Aggregates

Thirty days prior to the start of concrete placement, the Contractor shall perform all tests for aggregate quality required by ASTM C 33.

3.14.2 Batch-Plant Control

The measurement of concrete materials including cementitious materials, each size of aggregate, water, and admixtures shall be continuously controlled. The aggregate weights and amount of added water shall be adjusted as necessary to compensate for free moisture in the aggregates. The amount of air-entraining agent shall be adjusted to control air content within specified limits. A report shall be prepared indicating type and source of cement used, amount and source of admixtures used, aggregate source, the required aggregate

and water weights per cubic yard, amount of water as free moisture in each size of aggregate, and the batch aggregate and water weights per cubic yard for each class of concrete batched during each day's plant operation.

3.14.3 Concrete Mixture

a. Air Content Testing: Air content tests shall be made when test specimens are fabricated. In addition, at least two tests for air content shall be made on randomly selected batches of each separate concrete mixture produced during each 8-hour period of concrete production. Tests shall be made in accordance with ASTM C 231.

b. Slump Testing: In addition to slump tests which shall be made when test specimens are fabricated, at least four slump tests shall be made on randomly selected batches in accordance with ASTM C 143 for each separate concrete mixture produced during each 8-hour or less period of concrete production each day. Samples for slump shall be taken at the mixer. However, the Contractor is responsible for delivering the concrete to the placement site at the stipulated slump. If the Contractor's materials or transportation methods cause slump loss between the mixer and the placement, correlation samples shall be taken at the placement site as required by the Contracting Officer, and the slump at the mixer controlled as directed.

c. Temperature: The temperature of the concrete shall be measured when compressive strength specimens are fabricated. Measurement shall be in accordance with ASTM C 1064. The temperature shall be reported along with the compressive strength data.

d. Strength Specimens: At least one set of test specimens shall be made, for compressive or flexural strength as appropriate, on each different concrete mixture placed during the day for each 50 cubic yards or portion thereof of that concrete mixture placed each day. Additional sets of test specimens shall be made, as directed by the Contracting Officer, when the mixture proportions are changed or when low strengths have been detected. A truly random (not haphazard) sampling plan shall be developed by the Contractor and approved by the Contracting Officer prior to the start of construction. The plan shall assure that sampling is done in a completely random and unbiased manner. A set of test specimens for concrete with a 28-day specified strength per paragraph Strength Requirements in PART 1 shall consist of four specimens, two to be tested at 7 days and two at 28 days. Test specimens shall be molded and cured in accordance with ASTM C 31 and tested in accordance with ASTM C 39 for test cylinders and ASTM C 78 for test beams. Results of all strength tests shall be reported immediately to the Contracting Officer.

3.14.4 Inspection Before Placing

Foundations, construction joints, forms, and embedded items shall be inspected by the Contractor in sufficient time prior to each concrete placement in order to certify to the Contracting Officer that they are ready to receive concrete. The results of each inspection shall be reported in writing.

3.14.5 Placing

The placing foreman shall supervise placing operations, shall determine that the correct quality of concrete or grout is placed in each location as specified and as directed by the Contracting Officer, and shall be responsible for measuring and recording concrete temperatures and ambient temperature hourly during placing operations, weather conditions, time of placement, volume placed, and method of placement. The placing foreman shall not permit batching and placing to begin until it has been verified that an adequate number of vibrators in working order and with competent operators are available. Placing shall not be continued if any pile of concrete is inadequately consolidated. If any batch of concrete fails to meet the temperature requirements, immediate steps shall be taken to improve temperature controls.

3.14.6 Curing Inspection

a. Moist Curing Inspections. At least once each shift, and not less than twice per day on both work and non-work days, an inspection shall be made of all areas subject to moist curing. The surface moisture condition shall be noted and recorded.

b. Moist Curing Corrective Action. When a daily inspection report lists an area of inadequate curing, immediate corrective action shall be taken, and the required curing period for those areas shall be extended by 1 day.

c. Membrane Curing Inspection. No curing compound shall be applied until the Contractor has verified that the compound is properly mixed and ready for spraying. At the end of each operation, the Contractor shall estimate the quantity of compound used by measurement of the container and the area of concrete surface covered, shall compute the rate of coverage in square feet per gallon, and shall note whether or not coverage is uniform.

d. Membrane Curing Corrective Action. When the coverage rate of the curing compound is less than that specified or when the coverage is not uniform, the entire surface shall be sprayed again.

e. Sheet Curing Inspection. At least once each shift and once per day on non-work days, an inspection shall be made of all areas being cured using impervious sheets. The condition of the covering and the tightness of the laps and tapes shall be noted and recorded.

f. Sheet Curing Corrective Action. When a daily inspection report lists any tears, holes, or laps or joints that are not completely closed, the tears and holes shall promptly be repaired or the sheets replaced, the joints closed, and the required curing period for those areas shall be extended by 1 day.

3.14.7 Cold-Weather Protection

At least once each shift and once per day on non-work days, an inspection shall be made of all areas subject to cold-weather protection. Any deficiencies shall be noted, corrected, and reported.

3.14.8 Reports

All results of tests or inspections conducted shall be reported informally as they are completed and in writing daily. During periods of cold-weather protection, reports of pertinent temperatures shall be made daily. These requirements do not relieve the Contractor of the obligation to report certain failures immediately as required in preceding paragraphs. Such reports of failures and the action taken shall be confirmed in writing in the routine reports. The Contracting Officer has the right to examine all contractor quality control records.

-- End of Section --

SECTION 04200

MASONRY

PART 1 GENERAL

1.1 REFERENCES

The publications listed below form a part of this specification to the extent referenced. The publications are referred to in the text by basic designation only.

AMERICAN SOCIETY FOR TESTING AND MATERIALS (ASTM)

ASTM A 82	(1994) Steel Wire, Plain, for Concrete Reinforcement
ASTM A 153	(1996) Zinc Coating (Hot-Dip) on Iron and Steel Hardware
ASTM A 615	(1995) Deformed and Plain Billet-Steel Bars for Concrete Reinforcement
ASTM C 67	(1994) Sampling and Testing Brick and Structural Clay Tile
ASTM C 90	(1995) Loadbearing Concrete Masonry Units
ASTM C 140	(1995a) Sampling and Testing Concrete Masonry Units
ASTM C 216	(1995) Facing Brick (Solid Masonry Units Made from Clay or Shale)
ASTM C 270	(1995) Mortar for Unit Masonry
ASTM C 476	(1991) Grout for Masonry
ASTM C 641	(1982; R 1991) Staining Materials in Lightweight Concrete Aggregates
ASTM C 780	(1994) Preconstruction and Construction Evaluation of Mortars for Plain and Reinforced Unit Masonry
ASTM C 1019	(1989a; R 1993) Sampling and Testing Grout
ASTM D 2000	(1990; R 1994) Rubber Products in Automotive Applications
ASTM D 2240	(1991) Rubber Property - Durometer Hardness
ASTM D 2287	(1992) Nonrigid Vinyl Chloride Polymer and Copolymer Molding and Extrusion Compounds
ASTM E 447	(1992b) Compressive Strength of Masonry Prisms

1.2 SUBMITTALS

Government approval is required for submittals with a "GA" designation; submittals having an "FIO" designation are for information only. The following shall be submitted in accordance with SECTION 01330 SUBMITTAL PROCEDURES:

SD-01 Data

Face Brick; GA. Cast Stone Items; FIO.

Manufacturer's descriptive data.

SD-08 Statements

Cold Weather Installation; GA.

Cold weather construction procedures.

SD-09 Reports

Field Testing of Mortar; GA. Field Testing of Grout; GA. Prism tests; GA.

Test reports from an approved independent laboratory. Test reports on a previously tested material shall be certified as the same as that proposed for use in this project.

Special Inspection; GA.

Copies of masonry inspector reports.

SD-13 Certificates

Face Brick; FI0. Concrete Masonry Units (CMU); FIO. Control Joint Keys; FIO. Anchors, Ties, and Bar Positioners; FIO. Expansion-Joint Materials; FIO. Joint Reinforcement; FIO. Reinforcing Steel Bars and Rods; FIO. Cast Stone Items; FIO. Mortar Admixtures; FIO. Grout Admixtures; FIO.

Certificates of compliance stating that the materials meet the specified requirements.

SD-14 Samples

Cast Stone Items; GA. Face Brick; GA.

Color samples of three stretcher units and one unit for each type of special shape. Units shall show the full range of color and texture.

Anchors, Ties, and Bar Positioners; GA.

Two of each type used.

Expansion-Joint Material; GA.

One piece of each type used.

Joint Reinforcement; GA.

One piece of each type used, including corner and wall intersection pieces, showing at least two cross wires.

Portable Panel; GA.

One panel of face brick, 2 feet by 2 feet, containing approximately 24 brick facings to establish range of color and texture.

1.3 SAMPLE MASONRY PANELS

After material samples are approved and prior to starting masonry work, sample masonry panels shall be constructed for each type and color of masonry required. Separate panels shall be constructed for building walls and exterior screen walls. At least 48 hours prior to constructing the sample panels, the Contractor shall submit written notification to the Contracting Officer's Representative. Sample panels shall not be built in, or as part of the structure, but shall be located where directed.

1.3.1 Configuration

Panels shall be L-shaped or otherwise configured to represent all of the wall elements. Panels shall be of the size necessary to demonstrate the acceptable level of workmanship for each type of masonry represented on the project. The minimum size of a straight panel or a leg of an L-shaped panel shall be 8 feet long by 6 feet high.

1.3.2 Composition

Panels shall show full color range, texture, and bond pattern of the masonry work. The Contractor's method for mortar joint tooling; grouting of reinforced vertical cores, collar joints, bond beams, and lintels; positioning, securing, and lapping of reinforcing steel; positioning and lapping of joint reinforcement (including prefabricated corners); and cleaning of masonry work shall be demonstrated during the construction of the panels. Installation or application procedures for anchors, wall ties, CMU control joints, brick expansion joints, insulation, flashing, brick, row lock courses and weep holes shall be shown in the sample panels. The panels shall contain a masonry bonded corner that includes a bond beam corner. Panels shall show installation of electrical boxes and conduit. Panels shall contain a 2 foot by 2 foot opening placed at least 2 feet above the panel base and 2 feet away from all free edges, corners, and control joints. Required reinforcing shall be provided around this opening as well as at wall corners and control joints.

1.3.3 Construction Method

Temporary provisions shall be demonstrated to preclude mortar or grout droppings in the cavity and to provide a clear open air space of the dimensions shown on the drawings. The panel shall demonstrate the method that will be used to bring up the masonry wythes; support the reinforcing bars; and grout cells, bond beams, lintels, and collar joints using the requirements specified herein. If sealer is specified to be applied to the masonry units, sealer shall be applied to the sample panels. Panels shall be built on a properly designed concrete foundation.

1.3.4 Usage

The completed panels shall be used as the standard of workmanship for the type of masonry represented. Masonry work shall not commence until the sample panel for that type of masonry construction has been completed and approved. Panels shall be protected from the weather and construction operations until the masonry work has been completed and approved. After completion of the work, the sample panels, including all foundation concrete, shall become the property of the Contractor and shall be removed from the construction site.

1.4 DELIVERY, HANDLING, AND STORAGE

Materials shall be delivered, handled, stored, and protected to avoid chipping, breakage, and contact with soil or contaminating material.

1.4.1 Masonry Units

Concrete masonry units shall be covered or protected from inclement weather and shall conform to the moisture content as specified in ASTM C 90 when delivered to the jobsite. In addition, glass block units and prefaced concrete units shall be stored with their finish surfaces covered. Prefabricated lintels shall be marked on top sides to show either the lintel schedule number or the number and size of top and bottom bars.

1.4.2 Reinforcement, Anchors, and Ties

Steel reinforcing bars, coated anchors, ties, and joint reinforcement shall be stored above the ground. Steel reinforcing bars and uncoated ties shall be free of loose mill scale and rust.

1.4.3 Cementitious Materials, Sand and Aggregates

Cementitious and other packaged materials shall be delivered in unopened containers, plainly marked and labeled with manufacturers' names and brands. Cementitious material shall be stored in dry, weathertight enclosures or be completely covered. Cement shall be handled in a manner that will prevent the inclusion of foreign materials and damage by water or dampness. Sand and aggregates shall be stored in a manner to prevent contamination or segregation.

1.5 SPECIAL INSPECTION

A qualified masonry inspector approved by the Contracting Officer shall perform inspection of the masonry work. Minimum qualifications for the masonry inspector shall be 5 years of reinforced masonry inspection experience or acceptance by a State, municipality, or other governmental body having a program of examining and certifying inspectors for reinforced masonry construction. The masonry inspector shall be present during preparation of masonry prisms, sampling and placing of masonry units, placement of reinforcement (including placement of dowels in footings and foundation walls), inspection of grout space, immediately prior to closing of cleanouts, and during grouting operations. The masonry inspector shall assure Contractor compliance with the drawings and specifications. The masonry inspector shall keep a complete record of all inspections and shall submit daily written reports to the Quality Control Supervisory Representative reporting the quality of masonry construction.

PART 2 PRODUCTS

2.1 GENERAL REQUIREMENTS

The source of materials which will affect the appearance of the finished work shall not be changed after the work has started except with Contracting Officer's approval.

2.2 FACE BRICK

Color range and texture of face brick shall be as indicated and shall conform to the approved sample. Grade SW shall be used. Brick shall be tested for efflorescence. Brick units shall be delivered factory-blended to provide a uniform appearance and color range in the completed wall.

Brick shall conform to ASTM C 216, Type FBS. Brick size shall be modular and the nominal size of the brick used shall be 2-5/8 inches thick, 4 inches wide, and 8 inches long. Minimum average compressive strength of the brick shall be 3,000 psi with individual brick have a compressive strength less than 2,500 psi.

2.3 CONCRETE MASONRY UNITS (CMU)

Hollow and solid concrete masonry units shall conform to ASTM C 90, Type I, Lightweight. Cement shall have a low alkali content and be of one brand.

2.3.1 Aggregates

Lightweight aggregates and blends of lightweight and heavier aggregates in proportions used in producing the units, shall comply with the following requirements when tested for stain-producing iron compounds in accordance with ASTM C 641: by visual classification method, the iron stain deposited on the filter paper shall not exceed the "light stain" classification.

2.3.2 Kinds and Shapes

Units shall be modular in size and shall include closer, jamb, header, lintel, and bond beam units and special shapes and sizes to complete the work as indicated. Units used in exposed masonry surfaces in any one building shall have a uniform fine to medium texture and a uniform color.

2.3.3 Fire-Rated CMU

Concrete masonry units used in fire-rated construction shown on the drawings shall be of minimum equivalent thickness for the fire rating indicated and the corresponding type of aggregates indicated in TABLE I. Units containing more than one of the aggregates listed in TABLE I will be rated on the aggregate requiring the greater minimum equivalent thickness to produce the required fire rating.

TABLE I

FIRE-RATED CONCRETE MASONRY UNITS

See note (a) below

Aggregate Type	Minimum equivalent thickness in inches for fire rating of: 4 hours	3 hours	2 hours
Pumice	4.7	4.0	3.0
Expanded slag	5.0	4.2	3.3
Expanded clay, shale, or slate	5.7	4.8	3.7
Limestone, scoria, cinders or unexpanded slag	5.9	5.0	4.0
Calcareous gravel	6.2	5.3	4.2
Siliceous gravel	6.7	5.7	4.5

(a) Minimum equivalent thickness shall equal net volume as determined in conformance with ASTM C 140 divided by the product of the actual length and height of the face shell of the unit in inches. Where walls are to receive plaster or be faced with brick, or otherwise form an assembly; the thickness of plaster or brick or other material in the assembly will be included in determining the equivalent thickness.

2.4 CAST STONE ITEMS

Cast stone items shall be factory-made units from a plant regularly engaged in producing cast stone. Unless otherwise indicated, concrete (except the outer 1 inch) shall be 4,000 psi minimum conforming to Section 03300 CAST-IN-PLACE STRUCTURAL CONCRETE using 1/2 inch to No. 4 nominal-size coarse aggregate, and minimum reinforcement shall be the reinforcement required for handling of the units. Clearance of 3/4 inch shall be maintained between reinforcement and faces of units. The outer 1 inch shell shall be a mixture of white cement, sand and colorants with no coarse aggregate. Unless cast stone items have been subjected during manufacture to saturated-steam pressure of at least 120 pounds per square inch for at least 5 hours, the items, after casting, shall be either damp-cured for 24 hours or steam-cured and shall then be aged under cover for 28 days or longer. Cast stone members weighing over 80 pounds shall have built-in loops of galvanized wire or other approved provisions for lifting and anchoring. Units shall have beds and joints at right angles to the face, with sharp true arises and shall be cast with drip grooves on the underside where units overhang walls. Exposed-to-view surfaces shall be free of surface voids, spalls, cracks, and chipped or broken edges. Units exposed-to-view shall be of uniform appearance and color. Unless otherwise specified, units shall have a smooth dense finish. Prior to use, each item shall be wetted and inspected for crazing. Items showing evidence of dusting, spalling, crazing, or having surfaces treated with a protective coating will be rejected.

2.4.1 Sills and Copings

Sills and copings shall be cast with washes. Sills for windows having mullions shall be cast in sections with head joints at mullions and a 1/4 inch allowance for mortar joints. The ends of sills, except a 3/4 inch wide margin at exposed surfaces, shall be roughened for bond.

2.4.2 Splash Blocks

Splash blocks shall be as detailed. Reinforcement shall be the manufacturer's standard.

2.5 MORTAR

Mortar shall be Type S in accordance with the proportion specification of ASTM C 270 except Type S cement-lime mortar proportions shall be 1 part cement, 1/2 part lime and 4-1/2 parts aggregate. Cement shall have a low alkali content and be of one brand. Aggregates shall be from one source.

2.6 GROUT

Grout shall conform to ASTM C 476. Cement used in grout shall have a low alkali content. Grout slump shall be between 8 and 10 inches. Proportions shall not be changed and materials with different physical or chemical characteristics shall not be used in grout for the work unless additional evidence is furnished that the grout meets the specified requirements.

2.6.1 Grout Barriers

Grout barriers for vertical cores shall consist of fine mesh wire, fiberglass, or expanded metal.

2.7 ANCHORS, TIES, AND BAR POSITIONERS

Anchors and ties shall be fabricated without drips or crimps and shall be zinc-coated in accordance with ASTM A 153, Class B-2. Steel wire used for anchors and ties shall be fabricated from steel wire conforming to ASTM A 82. Anchors and ties shall be sized to provide a minimum of 5/8 inch mortar cover from either face.

2.7.1 Wall Ties

Wall ties shall be rectangular-shaped or Z-shaped fabricated of 3/16 inch diameter zinc-coated steel wire. Rectangular wall ties shall be no less than 4 inches wide. Wall ties may also be of a continuous type conforming to paragraph JOINT REINFORCEMENT. Adjustable type wall ties shall consist of two essentially U-shaped elements fabricated of 3/16 inch diameter zinc-coated steel wire. Adjustable ties shall be of the double pintle to eye type and shall allow a maximum of 1/2 inch eccentricity between each element of the tie. Play between pintle and eye opening shall be not more than 1/16 inch. The pintle and eye elements shall be formed so that both can be in the same plane.

2.7.2 Adjustable Anchors

Adjustable anchors shall be 3/16 inch diameter steel wire, triangular-shaped. Anchors attached to steel shall be 5/16 inch diameter steel bars placed to provide 1/16 inch play between flexible anchors and structural steel members. Spacers shall be welded to rods and columns. Equivalent welded-on steel anchor rods or shapes standard with the flexible-anchor manufacturer may be furnished when approved. Welds shall be cleaned and given one coat of zinc-rich touch up paint.

2.7.3 Bar Positioners

Bar positioners, used to prevent displacement of reinforcing bars during the course of construction, shall be factory fabricated from 9 gauge steel wire or equivalent, and coated with a hot-dip galvanized finish. Not more than one wire shall cross the cell.

2.8 JOINT REINFORCEMENT

Joint reinforcement shall be factory fabricated from steel wire conforming to ASTM A 82, welded construction. Tack welding will not be acceptable in reinforcement used for wall ties. Wire shall have zinc coating conforming to ASTM A 153, Class B-2. All wires shall be a minimum of 9 gauge. Reinforcement shall be ladder type design, having one longitudinal wire in the mortar bed of each face shell for hollow units and one wire for solid units. Joint reinforcement shall be placed a minimum of 5/8 inch cover from either face. The distance between crosswires shall not exceed 16 inches. Joint reinforcement for straight runs shall be furnished in flat sections not less than 10 feet long. Joint reinforcement shall be provided with factory formed corners and intersections. Joint reinforcement may be furnished with adjustable wall tie features.

2.9 REINFORCING STEEL BARS AND RODS

Reinforcing steel bars and rods shall conform to ASTM A 615, Grade 60.

2.10 CONTROL JOINT KEYS

Control joint keys shall be a factory fabricated solid section of natural or synthetic rubber (or combination thereof) conforming to ASTM D 2000 or polyvinyl chloride conforming to ASTM D 2287. The material shall be resistant to oils and solvents. The control joint key shall be provided with a solid shear section not less than 5/8 inch thick and 3/8 inch thick flanges, with a tolerance of plus or minus 1/16 inch. The control joint key shall fit neatly, but without forcing, in masonry unit jamb sash grooves. The control joint key shall be flexible at a temperature of minus 30 degrees F after five hours exposure, and shall have a durometer hardness of not less than 70 when tested in accordance with ASTM D 2240.

2.11 EXPANSION-JOINT MATERIALS

Backer rod and sealant shall be adequate to accommodate joint compression equal to 50 percent of the width of the joint. The backer rod shall be compressible rod stock of polyethylene foam, polyurethane foam, butyl rubber foam, or other flexible, nonabsorptive material as recommended by the sealant manufacturer. Sealant shall conform to Section 07900 JOINT SEALING.

2.12 FLASHING

Flashing shall be as specified in Section 07600 SHEET METALWORK, GENERAL.

2.13 WEEP HOLE VENTILATORS

Weephole ventilators shall be prefabricated aluminum grill type vents designed to prevent insect entry with maximum air entry. Ventilators shall be sized to match modular construction with a standard 3/8 inch mortar joint.

PART 3 EXECUTION

3.1 ENVIRONMENTAL REQUIREMENTS

3.1.1 Hot Weather Installation

The following precautions shall be taken if masonry is erected when the ambient air temperature is more than 99 degrees F in the shade and the relative humidity is less than 50 percent. All masonry materials shall be shaded from direct sunlight; mortar beds shall be spread no more than 4 feet ahead of masonry; masonry units shall be set within one minute of spreading mortar; and after erection, masonry shall be protected from direct exposure to wind and sun for 48 hours.

3.1.2 Cold Weather Installation

Before erecting masonry when ambient temperature or mean daily air temperature falls below 40 degrees F, a written statement of proposed cold weather construction procedures shall be submitted for approval. The following precautions shall be taken during all cold weather erection.

3.1.2.1 Preparation

Ice or snow formed on the masonry bed shall be thawed by the application of heat. Heat shall be applied carefully until the top surface of the masonry is dry to the touch. Sections of masonry deemed frozen and damaged shall be removed before continuing construction of those sections.

a. Air Temperature 40 to 32 Degrees F.: Sand or mixing water shall be heated to produce mortar temperatures between 40 degrees F and 120 degrees F.

b. Air Temperature 32 to 25 Degrees F.: Sand and mixing water shall be heated to produce mortar temperatures between 40 degrees F and 120 degrees F. Temperature of mortar on boards shall be maintained above freezing.

c. Air Temperature 25 to 20 Degrees F.: Sand and mixing water shall be heated to provide mortar temperatures between 40 degrees F and 120 degrees F. Temperature of mortar on boards shall be maintained above freezing. Sources of heat shall be used on both sides of walls under construction. Windbreaks shall be employed when wind is in excess of 15 mph.

d. Air Temperature 20 Degrees F and below: Sand and mixing water shall be heated to provide mortar temperatures between 40 degrees F and 120 degrees F. Enclosure and auxiliary heat shall be provided to

maintain air temperature above 32 degrees F. Temperature of units when laid shall not be less than 20 degrees F.

3.1.2.2 Completed Masonry and Masonry Not Being Worked On

a. Mean daily air temperature 40 degrees F to 32 degrees F.: Masonry shall be protected from rain or snow for 24 hours by covering with weather-resistive membrane.

b. Mean daily air temperature 32 degrees F to 25 degrees F.: Masonry shall be completely covered with weather-resistant membrane for 24 hours.

c. Mean Daily Air Temperature 25 Degrees F to 20 Degrees F.: Masonry shall be completely covered with insulating blankets or equally protected for 24 hours.

d. Mean Daily Temperature 20 Degrees F and Below: Masonry temperature shall be maintained above 32 degrees F for 24 hours by enclosure and supplementary heat, by electric heating blankets, infrared heat lamps, or other approved methods.

3.2 LAYING MASONRY UNITS

Masonry units shall be laid in running bond pattern. Facing courses shall be level with back-up courses, unless the use of adjustable ties has been approved in which case the tolerances shall be plus or minus 1/2 inch. Each unit shall be adjusted to its final position while mortar is still soft and plastic. Units that have been disturbed after the mortar has stiffened shall be removed, cleaned, and relaid with fresh mortar. Air spaces, cavities, chases, expansion joints, and spaces to be grouted shall be kept free from mortar and other debris. Units used in exposed masonry surfaces shall be free from chipped edges or other imperfections detracting from the appearance of the finished work. Vertical joints shall be kept plumb. Units being laid and surfaces to receive units shall be free of water film and frost. Solid units shall be laid in a nonfurrowed full bed of mortar. Mortar for veneer wythes shall be beveled and sloped toward the center of the wythe from the cavity side. Units shall be shoved into place so that the vertical joints are tight. Vertical joints of brick and the vertical face shells of concrete masonry units, except where indicated at control, expansion, and isolation joints, shall be completely filled with mortar. Mortar will be permitted to protrude up to 1/2 inch into the space or cells to be grouted. Means shall be provided to prevent mortar from dropping into the space below. In double wythe construction, the inner wythe may be brought up not more than 16 inches ahead of the outer wythe. Collar joints shall be filled with mortar or grout during the laying of the facing wythe, and filling shall not lag the laying of the facing wythe by more than 8 inches.

3.2.1 Surface Preparation

Surfaces upon which masonry is placed shall be cleaned of laitance, dust, dirt, oil, organic matter, or other foreign materials and shall be slightly roughened to provide a surface texture with a depth of at least 1/8 inch. Sandblasting shall be used, if necessary, to remove laitance from pores and to expose the aggregate.

3.2.2 Forms and Shores

Forms and shores shall be sufficiently rigid to prevent deflections which may result in cracking or other damage to supported masonry and sufficiently tight to prevent leakage of mortar and grout. Supporting forms and shores shall not be removed in less than 10 days.

3.2.3 Concrete Masonry Units

Units in pilasters, starting courses on footings, lintels, and beams, and where cells are to be filled with grout shall be full bedded in mortar under both face shells and webs. Other units shall be full bedded under both face shells. Head joints shall be filled solidly with mortar for a distance in from the face of the unit not less than the thickness of the face shell. Jamb units shall be of the shapes and sizes to conform with wall units. Solid units may be incorporated in the masonry work where necessary to fill out at corners, gable slopes, and elsewhere as approved.

3.2.4 Face Brick

Brick facing shall be laid with the better face exposed. Brick shall be laid in running bond with each course bonded at corners, unless otherwise indicated.

3.2.4.1 Wetting of Units

Wetting of brick units having an initial rate of absorption of more than 1 gram per minute per square inch of bed surface shall be in conformance with ASTM C 67. The method of wetting shall ensure that each unit is nearly saturated but surface dry when laid.

3.2.4.2 Solid Units

Bed, head, and collar joints shall be completely filled with mortar.

3.2.5 Tolerances

Masonry shall be laid plumb, true to line, with courses level. Bond pattern shall be kept plumb throughout. Corners shall be square unless noted otherwise. Except for walls constructed of prefaced concrete masonry units, masonry shall be laid within the following tolerances (plus or minus unless otherwise noted):

TABLE II
TOLERANCES

Variation from the plumb in the lines and surfaces of walls	
In adjacent masonry units	1/8 inch
In 10 feet	1/4 inch
In 20 feet	3/8 inch
In 40 feet or more	1/2 inch
Variations from the plumb for external corners, expansion joints, and other conspicuous lines	
In 20 feet	1/4 inch
In 40 feet or more	1/2 inch
Variations from the level for exposed lintels, sills, parapets, horizontal grooves, and other conspicuous lines	
In 20 feet	1/4 inch
In 40 feet or more	1/2 inch
Variation from level for bed joints and top surfaces of bearing walls	
In 10 feet	1/4 inch
In 40 feet or more	1/2 inch
Variations from horizontal lines	
In 10 feet	1/4 inch
In 20 feet	3/8 inch
In 40 feet or more	1/2 inch
Variations in thickness of walls	
Minus	1/4 inch
Plus	1/2 inch

3.2.6 Cutting and Fitting

Full units of the proper size shall be used wherever possible, in lieu of cut units. Cutting and fitting, including that required to accommodate the work of others, shall be done by masonry mechanics using power masonry saws. Concrete masonry units may be wet or dry cut. Wet cut units, before being placed in the work, shall be dried to the same surface-dry appearance as uncut units being laid in the wall. Cut edges shall be clean, true and sharp. Openings in the masonry shall be made carefully so that wall plates, cover plates or escutcheons required by the installation will completely conceal the openings and will have bottoms parallel with the masonry bed joints. Reinforced masonry lintels shall be provided above openings over 12 inches wide for pipes, ducts, cable trays, and other wall penetrations, unless steel sleeves are used.

3.2.7 Jointing

Joints shall be tooled when the mortar is thumbprint hard. Horizontal joints shall be tooled last. Joints shall be brushed to remove all loose and excess mortar. Mortar joints shall be finished as follows:

3.2.7.1 Flush Joints

Joints in concealed masonry surfaces and joints at electrical outlet boxes in wet areas shall be flush cut. Flush cut joints shall be made by cutting off the mortar flush with the face of the wall.

3.2.7.2 Tooled Joints

Joints in exposed interior masonry surfaces shall be tooled slightly concave. Joints shall be tooled with a jointer slightly larger than the joint width so that complete contact is made along the edges of the unit. Tooling shall be performed so that the mortar is compressed and the joint surface is sealed. Jointer of sufficient length shall be used to obtain a straight and true mortar joint.

3.2.7.3 Door and Window Frame Joints

On the exposed interior side of frames, joints between frames and abutting masonry walls shall be raked to a depth of 1/4 inch. On the exterior side of exterior frames, joints between frames and abutting masonry walls shall be raked to a depth of 5/8 inch.

3.2.8 Joint Widths

Joint widths shall be as follows:

3.2.8.1 Concrete Masonry Units

Concrete masonry units shall have 3/8 inch joints.

3.2.8.2 Brick

Brick joint widths shall be 3/8 inch. Brick expansion joint widths shall be as shown.

3.2.9 Embedded Items

Spaces around built-in items shall be filled with mortar. Openings around flush-mount electrical outlet boxes in wet locations shall be pointed with mortar. Anchors, ties, wall plugs, accessories, flashing, pipe sleeves and other items required to be built-in shall be embedded as the masonry work progresses. Anchors, ties and joint reinforcement shall be fully embedded in the mortar. Cells receiving anchor bolts and cells of the first course below bearing plates shall be filled with grout.

3.2.10 Unfinished Work

Unfinished work shall be stepped back for joining with new work. Toothing may be resorted to only when specifically approved. Loose mortar shall be removed and the exposed joints shall be thoroughly cleaned before laying new work.

3.2.11 Masonry Wall Intersections

Each course shall be masonry bonded at corners and elsewhere as shown. Masonry walls shall be anchored or tied together at corners and intersections with bond beam reinforcement and prefabricated corner or tee pieces of joint reinforcement as shown.

3.2.12 Partitions

Partitions shall be continuous from floor to underside of roof deck where shown. Openings in firewalls around joists or other structural members shall be filled as indicated or approved.

3.3 ANCHORED VENEER CONSTRUCTION

The inner and outer wythes shall be completely separated by a continuous airspace as shown on the drawings. Both the inner and the outer wythes shall be laid up together except when adjustable joint reinforcement assemblies are approved for use. When both wythes are not brought up together, through-wall flashings shall be protected from damage until they are fully enclosed in the wall. The airspace between the wythes shall be kept clear and free of mortar droppings by temporary wood strips laid on the wall ties and carefully lifted out before placing the next row of ties. A coarse gravel or drainage material shall be placed behind the weep holes in the cavity to a minimum depth of 4 inches of coarse aggregate or 10 inches of drainage material to keep mortar droppings from plugging the weep holes.

3.4 WEEP HOLES

Weep holes shall be provided not more than 24 inches on centers in mortar joints of the exterior wythe above wall flashing, over foundations, bond beams, and any other horizontal interruptions of the cavity. Weep holes shall be formed by removal of all mortar from a brick head joint. Removal must be done while the mortar is still plastic. At the option of the Contractor weep holes may be constructed using weep hole ventilators. Weep holes shall be kept free of mortar and other obstructions.

3.5 COMPOSITE WALLS

Masonry wythes shall be tied together with continuous joint reinforcement at every second CMU course. Reinforcing wires shall be laid not closer than 5/8 inch to either masonry face. Ties shall not extend through control joints. Collar joints between masonry facing and masonry backup shall be filled solidly with grout.

3.6 MORTAR

Mortar shall be mixed in a mechanically operated mortar mixer for at least 3 minutes, but not more than 5 minutes. Measurement of ingredients for mortar shall be by volume. Ingredients not in containers, such as sand, shall be accurately measured by the use of measuring boxes. Water shall be mixed with the dry ingredients in sufficient amount to provide a workable mixture which will adhere to the vertical surfaces of masonry units. Mortar that has stiffened because of loss of water through evaporation shall be retempered by adding water to restore the proper consistency and workability. Mortar that has reached its initial set or that has not been used within 2-1/2 hours after mixing shall be discarded.

3.7 REINFORCING STEEL

Reinforcement shall be cleaned of loose, flaky rust, scale, grease, mortar, grout, or other coating which might destroy or reduce its bond prior to placing grout. Bars with kinks or bends not shown on the drawings shall not be used. Reinforcement shall be placed prior to grouting. Unless otherwise indicated, vertical wall reinforcement shall extend to within 2 inches of tops of walls.

3.7.1 Positioning Bars

Vertical bars shall be accurately placed within the cells at the positions indicated on the drawings. A minimum clearance of 1/2 inch shall be maintained between the bars and masonry units. Minimum clearance between parallel bars shall be one diameter of the reinforcement. Vertical reinforcing may be held in place using bar positioners located near the ends of each bar and at intermediate intervals of not more than 192 diameters of the reinforcement. Column and pilaster ties shall be wired in position around the vertical steel. Ties shall be in contact with the vertical reinforcement and shall not be placed in horizontal bed joints.

3.7.2 Splices

Bars shall be lapped a minimum of 48 diameters of the reinforcement.

3.8 JOINT REINFORCEMENT

Joint reinforcement shall be installed at 16 inches on center or as indicated. Reinforcement shall be lapped not less than 6 inches. Prefabricated sections shall be installed at corners and wall intersections. The longitudinal wires of joint reinforcement shall be placed to provide not less than 5/8 inch cover to either face of the unit.

3.9 PLACING GROUT

Cells containing reinforcing bars shall be filled with grout. Hollow masonry units in walls or partitions supporting plumbing, heating, or other mechanical fixtures, voids at door and window jambs, and other indicated spaces shall be filled solid with grout. Cells under lintel bearings on each side of openings shall be filled solid with grout for full height of openings. Walls below grade, lintels, and bond beams shall be filled solid with grout. Units other than open end units may require grouting each course to preclude voids in the units. Grout not in place within 1-1/2 hours after water is first added to the batch shall be discarded. Sufficient time shall be allowed between grout lifts to preclude displacement or cracking of face shells of masonry units. If blowouts, flowouts, misalignment, or cracking of face shells should occur during construction, the wall shall be torn down and rebuilt.

3.9.1 Horizontal Grout Barriers

Grout barriers shall be embedded in mortar below cells of hollow units receiving grout.

3.9.2 Grouting Equipment

3.9.2.1 Grout Pumps

Pumping through aluminum tubes will not be permitted. Pumps shall be operated to produce a continuous stream of grout without air pockets, segregation, or contamination. Upon completion of each day's pumping, waste materials and debris shall be removed from the equipment, and disposed of outside the masonry.

3.9.2.2 Vibrators

Internal vibrators shall maintain a speed of not less than 5,000 impulses per minute when submerged in the grout. At least one spare vibrator shall be maintained at the site at all times. Vibrators shall be applied at uniformly spaced points not further apart than the visible effectiveness of the machine. Duration of vibration shall be limited to time necessary to produce satisfactory consolidation without causing segregation.

3.9.3 Grout Placement

Masonry shall be laid to the top of a pour before placing grout. Grout shall be placed using a hand bucket, concrete hopper, or grout pump to completely fill the grout spaces without segregation of the aggregates. Vibrators shall not be inserted into lower pours that are in a semi-solidified state. The height of grout pours shall be limited to four feet.

Grout shall be placed at a rate that will not cause displacement of the masonry due to hydrostatic pressure of the grout. Mortar protruding more than 1/2 inch into the grout space shall be removed before beginning the grouting operation. Grout pours 12 inches or less in height shall be consolidated by mechanical vibration or by puddling. Grout pours over 12 inches in height shall be consolidated by mechanical vibration and reconsolidated by mechanical vibration after initial water loss and settlement has occurred. Vibrators shall not be inserted into lower pours that are in a semi-solidified state.

3.10 BOND BEAMS

Bond beams shall be filled with grout and reinforced as indicated on the drawings. Grout barriers shall be installed under bond beam units to retain the grout as required. Reinforcement shall be continuous, including around corners, except through control joints or expansion joints, unless otherwise indicated on the drawings. Where splices are required for continuity, reinforcement shall be lapped 48 bar diameters. A minimum clearance of 1/2 inch shall be maintained between reinforcement and interior faces of units.

3.11 CONTROL JOINTS

Control joints shall be provided and constructed as indicated. The vertical mortar joint at control joint locations shall be continuous, including through all bond beams. This shall be accomplished by utilizing half blocks in alternating courses on each side of the joint. The control joint key shall be interrupted in courses containing continuous bond beam steel. In single wythe exterior masonry walls, the exterior control joints shall be raked to a depth of 3/4 inch; backer rod and sealant shall be installed in accordance with Section 07900 JOINT SEALING. Exposed interior control joints shall be raked to a depth of 1/4 inch. Concealed control joints shall be flush cut.

3.12 BRICK EXPANSION JOINTS

Brick expansion joints shall be provided and constructed as shown on the drawings. Joints shall be kept free of mortar and other debris.

3.13 LINTELS

3.13.1 Masonry Lintels

Masonry lintels shall be constructed with lintel units filled solid with grout in all courses and reinforced as indicated on the drawings. Lintel reinforcement shall extend beyond each side of masonry opening 40 bar diameters or 24 inches, whichever is greater. Reinforcing bars shall be supported in place prior to grouting and shall be located 1/2 inch above the bottom inside surface of the lintel unit.

3.13.2 Steel Lintels

Steel lintels shall be as shown on the drawings. Lintels shall be set in a full bed of mortar with faces plumb and true. Steel lintels shall have a minimum bearing length of 8 inches unless otherwise indicated on the drawings.

3.14 SILLS AND COPINGS

Sills and copings shall be set in a full bed of mortar with faces plumb and true.

3.15 INSULATION

Anchored veneer walls shall be insulated, where shown, by installing board-type insulation on the cavity side of the inner wythe. Insulation material is specified in Section 07210 BUILDING INSULATION. Board type insulation shall be applied directly to the masonry or thru-wall flashing with adhesive. Insulation shall be neatly fitted between obstructions without impaling of insulation on ties or anchors. The insulation shall be applied in parallel courses with vertical joints breaking midway over the course below and shall be applied in moderate contact with adjoining units without forcing, and shall be cut to fit neatly against adjoining surfaces.

3.16 SPLASH BLOCKS

Splash blocks shall be located as shown.

3.17 POINTING AND CLEANING

After mortar joints have attained their initial set, but prior to hardening, mortar and grout daubs or splashings shall be completely removed from masonry-unit surfaces that will be exposed or painted. Before completion of the work, defects in joints of masonry to be exposed or painted shall be raked out as necessary, filled with mortar, and tooled to match existing joints. Immediately after grout work is completed, scum and stains which have percolated through the masonry work shall be removed using a high pressure stream of water and a stiff bristled brush. Masonry surfaces shall not be cleaned, other than removing excess surface mortar, until mortar in joints has hardened. Masonry surfaces shall be left clean, free of mortar daubs, dirt,

stain, and discoloration, including scum from cleaning operations, and with tight mortar joints throughout. Metal tools and metal brushes shall not be used for cleaning.

3.17.1 Concrete Masonry Unit Surfaces

Exposed concrete masonry unit surfaces shall be dry-brushed at the end of each day's work and after any required pointing, using stiff-fiber bristled brushes.

3.17.2 Brick Surfaces

Exposed brick masonry surfaces shall be cleaned as necessary to obtain surfaces free of stain, dirt, mortar and grout daubs, efflorescence, and discoloration or scum from cleaning operations. After cleaning, the sample panel of similar material shall be examined for discoloration or stain as a result of cleaning. If the sample panel is discolored or stained, the method of cleaning shall be changed to assure that the masonry surfaces in the structure will not be adversely affected. The exposed masonry surfaces shall be water-soaked and then cleaned with a solution proportioned 1/2 cup trisodium phosphate and 1/2 cup laundry detergent to one gallon of water or cleaned with a proprietary masonry cleaning agent specifically recommended for the color and texture by the clay products manufacturer. The solution shall be applied with stiff fiber brushes, followed immediately by thorough rinsing with clean water. Proprietary cleaning agents shall be used in conformance with the cleaning product manufacturer's printed recommendations. Efflorescence shall be removed in conformance with the brick manufacturer's recommendations.

3.18 BEARING PLATES

Bearing plates for beams, joists, joist girders and similar structural members shall be set to the proper line and elevation with damp-pack bedding mortar, except where non-shrink grout is indicated. Bedding mortar and non-shrink grout shall be as specified in Section 03300 CAST-IN-PLACE STRUCTURAL CONCRETE.

3.19 PROTECTION

Facing materials shall be protected against staining. Top of walls shall be covered with nonstaining waterproof covering or membrane when work is not in progress. Covering of the top of the unfinished walls shall continue until the wall is waterproofed with a complete roof or parapet system. Covering shall extend a minimum of 2 feet down on each side of the wall and shall be held securely in place. Before starting or resuming, top surface of masonry in place shall be cleaned of loose mortar and foreign material.

3.20 TEST REPORTS

3.20.1 Field Testing of Mortar

At least three specimens of mortar shall be taken each day. A layer of mortar 1/2 to 5/8 inch thick shall be spread on the masonry units and allowed to stand for one minute. The specimens shall then be prepared and tested for compressive strength in accordance with ASTM C 780.

3.20.2 Field Testing of Grout

Field sampling and testing of grout shall be in accordance with the applicable provisions of ASTM C 1019. A minimum of three specimens of grout per day shall be sampled and tested. Each specimen shall have a minimum ultimate compressive strength of 2000 psi at 28 days.

3.20.3 Efflorescence Test

Brick which will be exposed to weathering shall be tested for efflorescence. Tests shall be scheduled far enough in advance of starting masonry work to permit retesting if necessary. Sampling and testing shall conform to the applicable provisions of ASTM C 67. Units meeting the definition of "effloresced" will be subjected to rejection.

3.20.4 Prism Tests

At least one prism test sample shall be made for each 5,000 square feet of wall but not less than three such samples shall be made for any building. Three prisms shall be used in each sample. Prisms shall be tested in accordance with ASTM E 447. Seven-day tests may be used provided the relationship between the 7- and 28-day strengths of the masonry is established by the tests of the materials used. Compressive strength shall not be less than 1,500 psi at 28 days. If the compressive strength of any prism falls below the specified value by more than 100 psi, steps shall be taken to assure that the load-carrying capacity of the structure is not jeopardized. If the likelihood of low-strength masonry is confirmed and computations indicate that the load-carrying capacity may have been significantly reduced, tests of cores drilled, or prisms sawed, from the area in question may be required. In such case, three specimens shall be taken for each prism test more than 100 psi below the specified value. Masonry in the area in question shall be considered structurally adequate if the average compressive strength of three specimens is equal to at least 85 percent of the specified value, and if the compressive strength of no single specimen is less than 75 percent of the specified value. Additional testing of specimens extracted from locations represented by erratic core or prism strength test results shall be permitted.

-- End of Section --

SECTION 05120

STRUCTURAL STEEL

PART 1 GENERAL

1.1 REFERENCES

The publications listed below form a part of this specification to the extent referenced. The publications are referred to in the text by basic designation only.

AMERICAN INSTITUTE OF STEEL CONSTRUCTION (AISC)

AISC LRFD, Vol I	(1993) Load & Resistance Factor Design Manual, Vol 1 - Structural Members, Specifications and Codes
AISC LRFD, Vol II	(1993) Load & Resistance Factor Design Manual, Vol II - Connections
AISC-04	(1989) Specification for Structural Steel Buildings - Allowable Stress Design and Plastic Design
AISC S303	(1992) Code of Standard Practice for Steel Buildings and Bridges
AISC S342L	(1993) Load and Resistance Factor Design Specification for Structural Steel Buildings
AISC S329	(1986) Allowable Stress Design Specification for Structural Joints Using ASTM A325 or ASTM A490 Bolts

AMERICAN SOCIETY FOR TESTING AND MATERIALS (ASTM)

ASTM A 6	(1995c) General Requirements for Rolled Structural Bars, Plates, Shapes, and Sheet Piling
ASTM A 36	(1994) Carbon Structural Steel
ASTM A 53	(1995a) Pipe, Steel, Black and Hot-Dipped, Zinc-Coated Welded and Seamless
ASTM A 307	(1994) Carbon Steel Bolts and Studs, 60,000 PSI Tensile Strength
ASTM A 325	(1994) Structural Bolts, Steel, Heat Treated, 120/105 ksi Minimum Tensile Strength
ASTM A 490	(1993) Heat-Treated Steel Structural Bolts, 150 ksi Minimum Tensile Strength
ASTM A 500	(1993) Cold-Formed Welded and Seamless Carbon Steel Structural Tubing in Rounds and Shapes

ASTM A 563	(1994) Carbon and Alloy Steel Nuts
ASTM F 844	(1990) Washers, Steel, Plain (Flat), Unhardened for General Use

AMERICAN SOCIETY OF MECHANICAL ENGINEERS (ASME)

ASME B46.1	(1985) Surface Texture (Surface Roughness, Waviness and Lay)

AMERICAN WELDING SOCIETY (AWS)

AWS A2.4	(1993) Standard Symbols for Welding, Brazing and Nondestructive Examination
AWS D1.1	(1994) Structural Welding Code - Steel

STEEL STRUCTURES PAINTING COUNCIL (SSPC)

SSPC Paint 25	(1991) Red Iron Oxide, Zinc Oxide, Raw Linseed Oil and Alkyd Primer (without Lead and Chromate Pigments)

1.2 GENERAL REQUIREMENTS

Structural steel fabrication and erection shall be performed by an organization experienced in structural steel work of equivalent magnitude. The Contractor shall be responsible for correctness of detailing, fabrication, and for the correct fitting of structural members. Connections, for any part of the structure not shown on the contract drawings, shall be considered simple shear connections and shall be designed and detailed in accordance with pertinent provisions of AISC S329. Substitution of sections or modification of connection details will not be accepted unless approved by the Contracting Officer. AISC-04 shall govern the work. Welding shall be in accordance with AWS D1.1. High-strength bolting shall be in accordance with AISC S329.

1.3 SUBMITTALS

Government approval is required for submittals with a "GA" designation; submittals having an "FIO" designation are for information only. The following shall be submitted in accordance with Section 01330 SUBMITTAL PROCEDURES:

SD-04 Drawings

Structural Steel System; GA. Structural Connections; GA.

Shop and erection details including members (with their connections) not shown on the contract drawings. Welds shall be indicated by standard welding symbols in accordance with AWS A2.4.

SD-08 Statements

Erection; FIO.

Erection plan of the structural steel framing required. Erection plan shall conform to the requirements of AISC S303, shall be submitted prior to erection, and shall describe all necessary temporary supports, including the sequence of installation and removal.

SD-13 Certificates

Mill Test Reports; FIO.

Certified copies of mill test reports for structural steel, structural bolts, nuts, washers and other related structural steel items.

Welder Qualifications; FIO.

Certified copies of welder qualifications test records showing qualification in accordance with AWS D1.1.

1.4 STORAGE

Material shall be stored out of contact with the ground in such manner and location as will minimize deterioration.

PART 2 PRODUCTS

2.1 STRUCTURAL STEEL

2.1.1 Carbon Grade Steel

Carbon grade steel shall conform to ASTM A 36.

2.2 STRUCTURAL TUBING

Structural tubing shall conform to ASTM A 500, Grade B.

2.3 STEEL PIPE

Steel pipe shall conform to ASTM A 53, Type E, Grade B.

2.4 HIGH STRENGTH BOLTS AND NUTS

High strength bolts shall conform to ASTM A 325, Type 1 with carbon steel nuts conforming to ASTM A 563, Grade C.

2.5 CARBON STEEL BOLTS

Carbon steel bolts shall conform to ASTM A 307, Grade A with carbon steel nuts conforming to ASTM A 563, Grade A.

2.6 NUTS DIMENSIONAL STYLE

Carbon steel nuts shall be Hex Style when used with ASTM A 307 bolts or Heavy Hex style when used with ASTM A 325 or ASTM A 490 bolts.

2.7 WASHERS

Plain washers shall conform to ASTM F 844.

2.8 PAINT

Paint shall conform to SSPC Paint 25.

PART 3 EXECUTION

3.1 FABRICATION

Fabrication shall be in accordance with the applicable provisions of AISC-04. Fabrication and assembly shall be done in the shop to the greatest extent possible. Compression joints depending on contact bearing shall have a surface roughness not in excess of 500 micro inches as determined by ASME B46.1, and ends shall be square within the tolerances for milled ends specified in ASTM A 6. Structural steelwork, except surfaces of steel to be encased in concrete, surfaces to be field welded, surfaces to be fireproofed, and contact surfaces of friction-type high-strength bolted connections shall be prepared for painting in accordance with the AISC-04 and primed with the specified paint.

3.2 ERECTION

Erection of structural steel shall be in accordance with the applicable provisions of AISC-04.

3.2.1 Connections

Anchor bolts and other connections between the structural steel and foundations shall be provided and shall be properly located and built into connecting work.

3.2.2 Base Plates and Bearing Plates

Column base plates for columns and bearing plates for beams, girders, and similar members shall be provided. Base plates and bearing plates shall be provided with full bearing after the supported members have been plumbed and properly positioned, but prior to placing superimposed loads. Separate setting plates under column base plates will not be permitted. The area under the plate shall be damp-packed solidly with bedding mortar, except where nonshrink grout is indicated on the drawings. Bedding mortar and grout shall be as specified in Section 03300 CAST-IN-PLACE STRUCTURAL CONCRETE.

3.2.3 Field Welded Connections

Field welded structural connections shall be completed before load is applied.

3.2.4 Field Priming

After erection, the field bolt heads and nuts, field welds, and any abrasions in the shop coat shall be cleaned and primed with paint of the same quality as that used for the shop coat.

-- End of Section --

SECTION 05210

STEEL JOISTS

PART 1 GENERAL

1.1 REFERENCES

The publications listed below form a part of this specification to the extent referenced. The publications are referred to in the text by basic designation only.

STEEL JOIST INSTITUTE (SJI)

SJI-01	(1994) Standard Specifications Load Tables and Weight Tables for Steel Joists and Joist Girders

1.2 SUBMITTALS

Government approval is required for submittals with a "GA" designation; submittals having an "FIO" designation are for information only. The following shall be submitted in accordance with Section 01330 SUBMITTAL PROCEDURES:

SD-04 Drawings

Steel Joists; GA.

Detail drawings shall include fabrication and erection details, specifications for shop painting, and identification markings of joists.

SD-13 Certificates

Steel Joists; FIO.

Certificates stating that the steel joists have been designed and manufactured in accordance with SJI-01. Complete engineering design computations may be submitted in lieu of the certification.

1.3 DESCRIPTION

Steel joists are designated on the drawings in accordance with the standard designations of the Steel Joist Institute. Joists of other standard designations or joists with properties other than those shown may be substituted for the joists designated provided the structural properties are equal to or greater than those of the joists shown and provided all other specified requirements are met.

1.4 DELIVERY AND STORAGE

Materials shall be delivered to the site in undamaged condition and stored off the ground in a well drained location, protected from damage, and easily accessible for inspection and handling.

PART 2 PRODUCTS

2.1 OPEN WEB STEEL JOISTS

Open web steel joists shall conform to SJI-01, K-Series. Joists shall be designed to support the loads given in the standard load tables of SJI-01.

2.2 ACCESSORIES AND FITTINGS

Accessories and fittings, including end supports and bridging, shall be in accordance with the standard specifications under which the members were designed.

2.3 SHOP PAINTING

Joists and accessories shall be shop painted with a rust-inhibiting primer paint.

PART 3 EXECUTION

3.1 ERECTION

Installation of joists shall be in accordance with the standard specification under which the member was produced. Joists shall be handled in a manner to avoid damage. Damaged joists shall be removed from the site, except when field repair is approved and such repairs are satisfactorily made in accordance with the manufacturer's recommendations. Joists shall be accurately set, and end anchorage shall be in accordance with the standard specification under which the joists were produced. Joist bridging shall be located as indicated on the drawings. Anchoring shall be secured in place prior to the application of any construction loads. Any temporary loads shall be distributed so that the carrying capacity of any joist is not exceeded. Loads shall not be applied to bridging during construction or in the completed work. Abraded, corroded, and field welded areas shall be cleaned and touched up with the same type of paint used in the shop painting.

3.2 BEARING PLATES

Bearing plates shall be provided with full bearing after the supporting members have been plumbed and properly positioned, but prior to placing superimposed loads. The area under the plate shall be damp-packed solidly with bedding mortar, except where nonshrink grout is indicated on the drawings. Bedding mortar and grout shall be as specified in Section 03300 CAST-IN-PLACE STRUCTURAL CONCRETE.

-- End of Section --

SECTION 05300

STEEL DECKING

PART 1 GENERAL

1.1 REFERENCES

The publications listed below form a part of this specification to the extent referenced. The publications are referred to in the text by basic designation only.

AMERICAN IRON AND STEEL INSTITUTE (AISI)

AISI-01	(1986; Addenda 1989) Cold-Formed Steel Design Manual

AMERICAN SOCIETY FOR TESTING AND MATERIALS (ASTM)

ASTM A 611	(1994) Steel, Sheet, Carbon, Cold-Rolled, Structural Quality
ASTM A 653	(1995) Steel Sheet, Zinc-Coated (Galvanized) or Zinc-Iron Alloy coated (Galvannealed) by the Hot-Dip Process
ASTM A 792	(1995) Steel Sheet, 55% Aluminum-Zinc Alloy-Coated by the Hot-Dip Process, General Requirements

STEEL DECK INSTITUTE (SDI)

SDI-02	(1987; Amended 1991) Diaphragm Design Manual
SDI Pub No 28	(1995) Design Manual for Composite Decks, Form Decks, Roof Decks, and Cellular Metal Floor Deck with Electrical Distribution

1.2 SUBMITTALS

Government approval is required for submittals with a "GA" designation; submittals having an "FIO" designation are for information only. The following shall be submitted in accordance with Section 01330 SUBMITTAL PROCEDURES:

SD-01 Data

Deck Units; FIO.

Design computations for the structural properties of the deck units or SDI certification that the units are designed in accordance with SDI specifications.

SD-04 Drawings

Deck Units; FIO. Accessories; FIO. Attachments; GA. Holes and Openings; GA.

Drawings shall include type, configuration, structural properties, location, and necessary details of deck units, accessories, and supporting members; size and location of holes to be cut and reinforcement to be provided; location and sequence of fastener connections; and the manufacturer's erection instructions.

SD-13 Certificates

Deck Units; FIO. Attachments; FIO.

Manufacturer's certificates attesting that the decking material meets the specified requirements. Manufacturer's certificate attesting that the operators are authorized to use the low-velocity piston tool.

1.3 DELIVERY, STORAGE, AND HANDLING

Deck units shall be delivered to the site in a dry and undamaged condition, stored off the ground with one end elevated, and stored under a weathertight covering permitting good air circulation. Finish of deck units shall be maintained at all times by using touch-up paint whenever necessary to prevent the formation of rust.

PART 2 PRODUCTS

2.1 DECK UNITS

Deck units shall conform to SDI Pub No 28. Panels of maximum possible lengths shall be used to minimize end laps. Fabricate deck units in lengths to span 3 or more supports with flush, telescoped, or nested 4 inch laps at ends, and interlocking, or nested side laps, unless otherwise indicated. Deck with cross-sectional configuration differing from the units indicated may be used, provided that the properties of the proposed units, determined in accordance with AISI-01, are equal to or greater than the properties of the units indicated and that the material will fit the space provided without requiring revisions to adjacent materials or systems.

2.1.1 Attic Floor Deck

Steel deck shall conform to ASTM A 611. Roof deck units shall be fabricated of the steel design thickness required by the design drawings and shall be shop painted or zinc-coated in conformance with ASTM A 653, G60 coating class or aluminum-zinc coated in accordance with ASTM A 792 Coating Designation AZ55.

2.2 TOUCH-UP PAINT

Touch-up paint for shop-painted units shall be of the same type used for the shop painting, and touch-up paint for zinc-coated units shall be an approved galvanizing repair paint with a high-zinc dust content. Finish of deck units and accessories shall be maintained by using touch-up paint whenever necessary to prevent the formation of rust.

2.3 ADJUSTING PLATES

Adjusting plates or segments of deck units shall be provided in locations too narrow to accommodate full-size units. As far as practical, the plates shall be the same thickness and configuration as the deck units.

2.4 CLOSURE PLATES

2.4 Cover Plates to Close Panels

Cover plates shall be configured to close panel edge and end conditions and where panels change direction or abut.

2.4 Column Closures to Close Openings

Column closures shall be configured to close openings between steel deck and structural steel columns.

2.4 Sheet Metal

Where deck is cut for passage of pipes, ducts, columns, etc., and deck is to remain exposed, provide a neatly cut sheet metal collar to cover edges of deck and to facilitate the installation of a sealant to seal the opening air tight. Do not cut deck until after installation of supplemental supports.

2.5 SEALANT

Sealant for end and side laps shall be preformed tape sealant as specified in Section 07900 JOINT SEALING.

PART 3 EXECUTION

3.1 ERECTION

In addition to structural requirements the installation of the attic floor decking shall be made in such a manner that an airtight barrier is created between the attic and the spaces below.

Erection of deck and accessories shall be in accordance with SDI-02, the design drawings, the special procedures indicated, and the approved detail drawings. Damaged deck and accessories including material which is permanently stained or contaminated, with burned holes or deformed shall not be installed. The deck units shall be placed on secure supports, properly adjusted, and aligned at right angles to supports before being permanently secured in place. The deck shall not be used for storage or as a working platform until the units have been secured in position. Loads shall be distributed by appropriate means to prevent damage during construction and to the completed assembly. The maximum uniform distributed storage load shall not exceed the design live load. There shall be no loads suspended directly from the steel deck.

3.2 ATTACHMENTS

All fasteners shall be installed in accordance with the manufacturer's recommended procedure, except as otherwise specified. The deck units shall be fastened with screws to supports as indicated on the design drawings and in accordance with requirements of SDI Pub No 28. Welding of steel deck will not

be permitted. Holes and similar defects will not be acceptable. Deck ends shall be lapped 4 inches and sealed with preformed tape sealant. All partial or segments of deck units shall be attached to structural supports in accordance with Section 2.5 of SDI-02.

Sides of panels shall be nested with a continuous strip of tape sealant between the mating surfaces. Each sheet shall be attached to the adjacent sheet with sheet metal screws spaced at maximum 12 inch centers.

3.3 HOLES AND OPENINGS

All holes and openings required shall be coordinated with the drawings, specifications, and other trades. Holes and openings shall be drilled or cut, reinforced and framed as indicated on the drawings or described in the specifications and as required for rigidity and load capacity. Holes and openings less than 6 inches across require no reinforcement. Holes and openings 6 to 12 inches across shall be reinforced by 0.0474 inch thick steel sheet at least 12 inches wider and longer than the opening and be fastened to the steel deck at each corner of the sheet and at a maximum of 6 inches on center. Holes and openings larger than 12 inches shall be reinforced by steel angles installed perpendicular to the steel joists and supported by the adjacent steel joists. Steel angles shall be installed perpendicular to the deck ribs and shall be fastened to the angles perpendicular to the steel joists.

-- End of Section --

SECTION 05500

MISCELLANEOUS METAL

PART 1 GENERAL

1.1 REFERENCES

The publications listed below form a part of this specification to the extent referenced. The publications are referred to in the text by basic designation only.

ALUMINUM ASSOCIATION (AA)

AA DAF-45	(1980; R 1993) Designation System for Aluminum Finishes

AMERICAN NATIONAL STANDARDS INSTITUTE (ANSI)

ANSI A14.3	(1992) Ladders - Fixed - Safety Requirements

AMERICAN SOCIETY FOR TESTING AND MATERIALS (ASTM)

ASTM A 53	(1996) Pipe, Steel, Black and Hot-Dipped, Zinc-Coated, Welded and Seamless
ASTM A 123	(1989a) Zinc (Hot-Dip Galvanized) Coatings on Iron and Steel Products
ASTM A 653	(1996) Steel Sheet, Zinc-Coated (Galvanized) or Zinc-Iron Alloy-Coated (Galvannealed) by the Hot-Dip Process
ASTM A 924	(1996a) Steel Sheet, Metallic-Coated by the Hot-Dip Process

AMERICAN WELDING SOCIETY (AWS)

AWS D1.1	(1994) Structural Welding Code - Steel

COMMERCIAL ITEM DESCRIPTIONS (CID)

CID A-A-344	(Rev B) Lacquer, Clear Gloss, Exterior, Interior

NATIONAL ASSOCIATION OF ARCHITECTURAL METAL MANUFACTURERS (NAAMM)

NAAMM MBG 532	(1988) Heavy Duty Metal Bar Grating Manual

1.2 SUBMITTALS

Government approval is required for submittals with a "GA" designation; submittals having an "FIO" designation are for information only. The following shall be submitted in accordance with Section 01330 SUBMITTAL PROCEDURES:

SD-04 Drawings

Miscellaneous Metal Items; FIO.

Detail drawings indicating material thickness, type, grade, and class; dimensions; and construction details. Drawings shall include catalog cuts, erection details, manufacturer's descriptive data and installation instructions, and templates.

1.3 GENERAL REQUIREMENTS

The Contractor shall verify all measurements and shall take all field measurements necessary before fabrication. Welding to or on structural steel shall be in accordance with AWS D1.1. Items specified to be galvanized, when practicable and not indicated otherwise, shall be hot-dip galvanized after fabrication. Galvanizing shall be in accordance with ASTM A 123, ASTM A 653, or ASTM A 924, as applicable. Exposed fastenings shall be compatible materials, shall generally match in color and finish, and shall harmonize with the material to which fastenings are applied. Materials and parts necessary to complete each item, even though such work is not definitely shown or specified, shall be included. Poor matching of holes for fasteners shall be cause for rejection. Fastenings shall be concealed where practicable. Thickness of metal and details of assembly and supports shall provide strength and stiffness. Joints exposed to the weather shall be formed to exclude water.

1.4 DISSIMILAR MATERIALS

Where dissimilar metals are in contact, or where aluminum is in contact with concrete, mortar, masonry, wet or pressure-treated wood, or absorptive materials subject to wetting, the surfaces shall be protected with a coat of bituminous paint or asphalt varnish.

1.5 WORKMANSHIP

Miscellaneous metalwork shall be well formed to shape and size, with sharp lines and angles and true curves. Drilling and punching shall produce clean true lines and surfaces. Welding shall be continuous along the entire area of contact except where tack welding is permitted. Exposed connections of work in place shall not be tack welded. Exposed welds shall be ground smooth. Exposed surfaces of work in place shall have a smooth finish, and unless otherwise approved, exposed riveting shall be flush. Where tight fits are required, joints shall be milled. Corner joints shall be coped or mitered, well formed, and in true alignment. Work shall be accurately set to established lines and elevations and securely fastened in place. Installation shall be in accordance with manufacturer's installation instructions and approved drawings, cuts, and details.

1.6 ANCHORAGE

Anchorage shall be provided where necessary for fastening miscellaneous metal items securely in place. Anchorage not otherwise specified or indicated shall include slotted inserts made to engage with the anchors, expansion shields, and power-driven fasteners when approved for concrete; toggle bolts and through bolts for masonry; machine and carriage bolts for steel; and lag bolts and screws for wood.

1.7 ALUMINUM FINISHES

Unless otherwise specified, aluminum items shall have hand sanded or machine finish to a 240 grit. The thickness of the coating shall be not less than that specified for protective and decorative type finishes for items used in interior locations or architectural Class I type finish for items used in exterior locations in AA DAF-45. Items to be anodized shall receive a polished satin finish. Aluminum surfaces to be in contact with concrete or masonry during construction shall be protected with a field coat conforming to CID A-A-344.

1.8 SHOP PAINTING

Surfaces of ferrous metal except galvanized surfaces, shall be cleaned and shop coated with the manufacturer's standard protective coating unless otherwise specified. Surfaces of items to be embedded in concrete shall not be painted. Items to be finish painted shall be prepared according to manufacturer's recommendations or as specified.

PART 2 PRODUCTS

2.1 ACCESS DOORS AND PANELS

Doors and panels shall be flush type unless otherwise indicated. Frames for access doors shall be fabricated of not lighter than 16 gauge steel with welded joints and finished with anchorage for securing into construction. Access doors shall be a minimum of 14 by 20 inches and of not lighter than 14 gauge steel, with stiffened edges, complete with attachments. Access doors shall be hinged to frame and provided with a flush face, screw driver operated latch. Exposed metal surfaces shall have a baked enamel finish.

2.2 PIPE GUARDS (BOLLARDS)

Pipe guards shall be heavy duty steel pipe conforming to ASTM A 53, Type E or S, weight STD, black finish.

2.3 DOWNSPOUT BOOTS

Downspout boots shall be cast iron with receiving bells sized to fit downspouts.

2.4 FLOOR GRATINGS AND FRAMES

Grating shall be carbon steel designed in accordance with NAAMM MBG 532 to meet the indicated load requirements. Edges shall be banded with bars 1/4 inch less in height than bearing bars for grating sizes above 3/4 inch. Banding bars shall be flush with the top of bearing grating. Frames shall be of welded steel construction finished to match the grating. Floor gratings and frames shall be galvanized after fabrication.

2.5 LADDERS

Ladders shall be galvanized steel or aluminum, fixed rail type designed and fabricated in accordance with ANSI A14.3.

2.6 MISCELLANEOUS

Miscellaneous plates and shapes for items that do not form a part of the structural steel framework, such as lintels, sill angles, miscellaneous mountings, and frames, shall be provided to complete the work.

2.7 ATTIC ACCESS SCUTTLE

Scuttles shall be of aluminum or galvanized steel not less than 14 gauge, with 3 inch beaded flange welded and ground at corners. Scuttle shall be sized to provide the minimum clear opening indicated. Cover and curb shall be insulated with 1 inch thick rigid insulation covered and protected by aluminum sheet or galvanized steel liner not less than 26 gauge. Scuttle shall be completely assembled with heavy hinges, compression spring operators enclosed in telescopic tubes, positive snap latch with turn handles on inside and outside and neoprene draft seal. Fasteners shall be provided for padlocking on the inside. The cover shall be equipped with an automatic hold-open arm complete with handle to permit one hand release.

2.8 STEEL DOOR FRAMES

Steel door frames built from structural shapes shall be neatly mitered and securely welded at the corners with all welds ground smooth. Jambs shall be provided with 2 by 1/4 by 12 inch bent, adjustable metal anchors spaced not over 2 feet 6 inches on centers. Provision shall be made to stiffen the top member for all spans over 3 feet. Continuous door stops shall be made of 1-1/2 by 5/8 inch bars.

2.9 TRENCH FRAMES

Trench frames shall be designed to meet the indicated load requirements. Trench frames and anchors shall be all welded steel construction designed to match grating. Frame size and construction shall be such that the frame will finish flush with the top of the grating and the floor.

2.10 WINDOW SUB-SILL

Window sub-sill shall be of extruded aluminum alloy of size and design indicated. Not less than two anchors per window section shall be provided for securing into mortar joints of masonry sill course. Sub-sills shall have a paint finish matching window frame finish.

PART 3 EXECUTION

3.1 GENERAL INSTALLATION REQUIREMENTS

All items shall be installed at the locations shown and according to the manufacturer's recommendations. Items listed below require additional procedures as specified.

3.2 REMOVABLE ACCESS PANELS

A removable access panel not less than 12 by 12 inches shall be installed directly below each valve, flow indicator, damper, or air splitter that is located above the ceiling.

3.3 INSTALLATION OF PIPE GUARDS (BOLLARDS)

Pipe guards shall be set vertically in concrete piers. Piers shall be constructed of, and the hollow cores of the pipe filled with, concrete specified in SECTION 03300 CAST-IN-PLACE STRUCTURAL CONCRETE having a compressive strength of 3000 psi.

3.4 INSTALLATION OF DOWNSPOUT BOOTS

Downspouts shall be secured to building through integral lips with appropriate fasteners.

3.5 TRENCH FRAMES

Trench frames shall finish flush with the floor.

-- End of Section --

SECTION 06100

ROUGH CARPENTRY

PART 1 GENERAL

1.1 REFERENCES

The publications listed below form a part of this specification to the extent referenced. The publications are referred to in the text by basic designation only.

AMERICAN FOREST AND PAPER ASSOCIATION (AFPA)

AFPA-T901	(1991; Supple 1993; Addenda Apr 95) National Design Specification for Wood Construction
AFPA T11-WCD1	(1988) Manual for Wood Frame Construction

AMERICAN INSTITUTE OF TIMBER CONSTRUCTION (AITC)

AITC 111	(1979) Recommended Practice for Protection of Structural Glued Laminated Timber During Transit, Storage and Erection

APA-THE ENGINEERED WOOD ASSOCIATION (APA)

APA E445	(1991; Rev Jan 1996) Performance Standards and Policies for Structural-Use Panels
APA EWS R540	(1996) Proper Storage and Handling of Glulam Beams

AMERICAN SOCIETY FOR TESTING AND MATERIALS (ASTM)

ASTM F 547	(1977; R 1990) Definitions of Terms Relating to Nails for Use with Wood and Wood-Base Materials

AMERICAN WOOD-PRESERVERS' ASSOCIATION (AWPA)

AWPA C2	(1995) Lumber, Timber, Bridge Ties and Mine Ties - Preservative Treatment by Pressure Processes
AWPA C9	(1995) Plywood - Preservative Treatment by Pressure Processes
AWPA M4	(1995) Standard for the Care of Preservative-Treated Wood Products
AWPA P5	(1996) Standards for Waterborne Preservatives

DEPARTMENT OF COMMERCE (DOC)

DOC PS 1	(1996) Voluntary Product Standard - Construction and Industrial Plywood
DOC PS 2	(1992) Performance Standards for Wood-Based Structural-Use Panels

SOUTHERN PINE INSPECTION BUREAU (SPIB)

SPIB-1001	(1994) Standard Grading Rules for Southern Pine Lumber

WESTERN WOOD PRODUCTS ASSOCIATION (WWPA)

WWPA-01	(1995; Supple Nos. 1, 2, and 3) Western Lumber Grading Rules 95

1.2 DELIVERY AND STORAGE

Materials shall be delivered to the site in undamaged condition, stored off ground in fully covered, well ventilated areas, and protected from extreme changes in temperature and humidity. Laminated timber shall be handled and stored in accordance with AITC 111 or APA EWS R540.

PART 2 PRODUCTS

2.1 LUMBER AND SHEATHING

2.1.1 Grading and Marking

2.1.1.1 Lumber Products

Lumber shall bear an authorized gradestamp or grademark recognized by ALSC, or an ALSC recognized certification stamp, mark, or hammerbrand.

2.1.1.2 Plywood and other Sheathing Products

Materials shall bear the grademark or other identifying marks indicating grades of material and rules or standards under which produced, including requirements for qualifications and authority of the inspection organization. Except for plywood and structural-use panels, bundle marking will be permitted in lieu of marking each individual piece. Surfaces that are to be exposed to view shall not bear grademarks or other types of identifying marks.

2.1.2 Sizes

Lumber and material sizes shall conform to requirements of the rules or standards under which produced. Lumber shall be surfaced on four sides. Unless otherwise specified, sizes indicated are nominal sizes, and actual sizes shall be within manufacturing tolerances allowed by the standard under which the product is produced.

2.1.3 Treatment

Exposed areas of treated wood that are cut or drilled after treatment shall receive a field treatment in accordance with AWPA M4. The following items shall be treated:

a. Wood members in contact with or within 18 inches of soil.

b. Wood members in contact with water.

c. Wood members exposed to the weather.

d. Wood members set into concrete regardless of location, including flush-with-deck wood nailers for roofs.

e. Wood members in contact with concrete or masonry.

2.1.3.1 Lumber

Lumber shall be treated in accordance with AWPA C2 with waterborne preservatives listed in AWPA P5 to a retention level as follows:

a. 0.25 pcf intended for above ground use.
b. 0.40 pcf intended for ground contact and fresh water use.

2.1.3.2 Plywood

Plywood shall be treated in accordance with AWPA C9 with waterborne preservatives listed in AWPA P5 to a retention level as follows:

a. 0.25 pcf intended for above ground use.
b. 0.40 pcf intended for ground contact and fresh water use.

2.1.4 Moisture Content

At the time lumber and other materials are delivered and when installed in the work their moisture content shall be as follows:

a. Treated and Untreated Lumber:

4 inches or less, nominal thickness, 19 percent maximum. 5 inches or more, nominal thickness, 23 percent maximum in a 3 inch perimeter of the timber cross-section.

b. Materials Other Than Lumber: In accordance with standard under which product is produced.

2.1.5 Plywood

Plywood shall conform to DOC PS 1, APA E445 or DOC PS 2, in the grades and thicknesses indicated.

2.1.6 Miscellaneous Wood Members

2.1.6.1 Furring

Furring strips shall be SPIB-1001 Southern Pine, number 2, common; or WWPA-01 Douglas Fir-Larch, construction, standard grade.

2.1.6.2 Fascia and Soffit Boards

SPIB-1001 Southern Pine, No. 2; or WWPA-01 Douglas Fir-Larch, construction grade.

2.1.6.3 Blocking

Blocking shall be standard or number 2 grade, any specie.

2.2 ACCESSORIES AND NAILS

Markings shall identify both the strength grade and the manufacturer. Accessories and nails shall conform to the following:

2.2.1 Bolts: Lag, Toggle, and Miscellaneous Bolts and Screws

Type, size, and finish indicated. Where not indicated use the best suited for intended use. Finish options include zinc compounds, cadmium, and aluminum paint impregnated finishes.

2.2.2 Expansion Shields

Type and size best suited for intended use.

2.2.3 Nails

ASTM F 547, size and type best suited for purpose. In general, 8-penny or larger nails shall be used for nailing through 1 inch thick lumber and for toe nailing 2 inch thick lumber; 16-penny or larger nails shall be used for nailing through 2 inch thick lumber. Nails used with treated lumber and sheathing shall be galvanized. Nailing shall be in accordance with the recommended nailing schedule contained in AFPA T11-WCD1. Where detailed nailing requirements are not specified, nail size and spacing shall be sufficient to develop an adequate strength for the connection. The connection's strength shall be verified against the nail capacity tables in AFPA-T901. Reasonable judgement backed by experience shall ensure that the designed connection will not cause the wood to split. If a load situation exceeds a reasonable limit for nails, a specialized connector shall be used.

PART 3 EXECUTION

3.1 INSTALLATION OF MISCELLANEOUS WOOD MEMBERS

3.1.1 Nailers and Nailing Strips

Nailers and nailing strips shall be provided as necessary for the attachment of finish materials. Anchors shall extend through the entire thickness of the nailer. Strips shall be run in lengths as long as practicable, butt jointed, cut into wood framing members when necessary, and rigidly secured in place.

3.1.2 Furring Strips

Furring strips shall be provided at the locations shown. Furring strips shall be installed at 16 inches on center unless otherwise shown, run in lengths as long as practicable, butt jointed and rigidly secured in place.

-- End of Section --

SECTION 06400

MILLWORK

PART 1 GENERAL

1.1 APPLICABLE PUBLICATIONS

The publications listed below form a part of this specification to the extent referenced. The publications are referred to in the text by the basic designation only.

AMERICAN NATIONAL STANDARDS INSTITUTE, INC. (ANSI) PUBLICATION

A156.9 (1975) Cabinet Hardware

AMERICAN PLYWOOD ASSOCIATION (APA) PUBLICATION

Design/Construction Guide Residential and Commercial (1979, Rev Mar. 1985)

ARCHITECTURAL WOODWORK INSTITUTE (AWI)

Architectural Woodwork Quality Standards, Guide Specifications and Quality Certification Program (Fifth Edition) (1988)

BUILDERS HARDWARE MANUFACTURERS ASSOCIATION (BHMA)

BHMA A156.18 (1987) Materials and Finishes

FEDERAL SPECIFICATION (FED. SPEC.)

MMM-A-130B Adhesive, Contact

NATIONAL ELECTRICAL MANUFACTURERS ASSOCIATION (NEMA) STANDARD

LD 3 (1980) High-Pressure Decorative Laminates

1.2 GENERAL

Wood cabinets shall be Architectural Cabinets, Custom grade constructed in conformance with Section 400 and 400B of the AWI Architectural Woodwork Quality Standards (except as modified herein) and with the details shown on the drawings. Where construction requirements of the drawings exceed those of the AWI Standards, the drawings govern. Construction shall be of the flush overlay type as indicated on the drawings. Shelves shall be adjustable type. All exposed surfaces of cabinet work shall be covered with plastic laminate and shall conform to Section 400B of the AWI Architectural Woodwork Quality Standards. Counters shall be provided with watertight sink rim. Cabinets shall be of the indicated configuration. Drawers shall be removable and shall be equipped with position stops to avoid accidental complete withdrawals.

This section revised
by AMDT 0001

1.3 SUBMITTALS

Government approval is required for submittals with a "GA" designation; submittals having an "FIO" designation are for information only. The following shall be submitted in accordance with Section 01330; SUBMITTAL PROCEDURES.

SD-04 Shop Drawings

Cabinets; GA. Vanities; GA. Milled Hardwood; GA.

Drawings shall show each type of cabinet and related items and shall clearly indicate the complete layout of the cabinets and accessories, and pertinent details of construction, fabrication, and attachments.

SD-13 Certificates

Cabinets; FIO.

Certificates shall certify that cabinets are constructed in conformance with specified AWI Architectural Woodwork Quality Standards.

SD-14 Samples

Cabinets; FIO. Window Stools; FIO. Milled Hardwood; GA.

Samples to be submitted for approval with the shop drawings shall include the items listed below. In lieu of individual samples, complete minimum size cabinets may be furnished as samples. Mockup units are not acceptable.

Countertop and back splash - One section, 4 inches wide, containing both.

Door and drawer front - One of each, with hardware mounted, finished as required.

Window stools - One full sized unit. If acceptable, the submitted unit may be installed in the construction.

Milled hardwood trim - one twelve inch long piece of each shape. Samples shall include the full range of defects to be provided in the final product.

PART 2 PRODUCTS

2.1 WOOD CABINETS

2.1.1 General

All exposed parts of wood cabinets shall be laminate clad in accordance with AWI Architectural Woodwork Quality Standards, Section 400B. Design, color, and finish shall be as indicated on the drawings. Tops of shelves and face frames shall be considered exposed. Particle board, OSB, or other wood products using formaldehyde based adhesives are prohibited.

This section revised
by AMDT 0001

2.1.2 Cabinet Body, Shelves and Doors

Cabinet body, shelves and doors shall be constructed of any 3/4-inch thick grade I or II panel product permitted by AMI Architectural Woodwork Quality Standards, Section 400B and 200 as restricted by paragraph 2.1.1. Material used for shelves shall be capable of spanning the indicated spans without deflecting more than 1/4 inch at the midspan when loaded to 30 pounds per lineal foot. Doors shall be edge banded with laminate matching face material and shall be backed with white plastic laminate. Other body parts shall be backed with backer sheets of high pressure plastic laminate Grade BK20 applied to the non-exposed side of all core material.

2.1.3 Face Frames

Face frames shall be constructed of any 3/4 inch thick lumber or panel product permitted by AWI Architectural Woodwork Quality Standards, Section 100, 200 and 400B as restricted by paragraph 2.1.1. Hardware attachment shall be considered in the selection of the material.

2.1.4 Plastic Laminates

Plastic laminate shall conform to NEMA Pub. No. LD 3. Adhesive shall conform to Fed. Spec. MMM-A-130, Type I. Continuous sheets of longest lengths practicable shall be provided. Joints in surface sheeting shall be tight and flush and held to a practicable minimum. Type GP50 plastic laminate shall be used.

2.2 HARDWARE

Finish on all items of exposed hardware shall conform to BHMA A156.18 626, satin chrome. Finish on all concealed hardware may be the standard finish of the manufacturer but the finish for any particular item shall be the same for all items of that type furnished. Hardware behind doors and drawer fronts may be considered concealed:

Each door shall receive:

1 pair	Self-Closing Hinges	1560 Series	Stanley
1	Pull	4483	Stanley

Each drawer shall receive:

1 set	Drawer Guides	1300	KV
1	Pull	4483	Stanley

Other cabinet hardware shall be:

	Shelf Standards	255	KV
	Shelf Supports	256	KV

This section revised
by AMDT 0001

2.3 KITCHEN COUNTERTOPS AND BACK SPLASH

2.3.1 General

Countertop and back splash core shall be constructed of 3/4-inch plywood, B-B EXT-APA (exterior glue) or marine grade plywood. Facing, edging and trim shall consist of plastic laminate cut and fitted to all exposed edges and faces.

2.3.2 Plastic Laminates

Plastic laminate shall conform to NEMA Pub. No. LD 3. Adhesive shall conform to Fed. Spec. MMM-A-130, Type I. Continuous sheets of longest lengths practicable shall be provided. Joints in surface sheeting shall be tight and flush and held to a practicable minimum. Type GP50 plastic laminate shall be used.

2.3.3 Sink Rims

Sink rims shall be of the corrosion-resisting steel clamping type, sized to the sink, and a standard product of a manufacturer regularly producing this type of equipment. Separate sink rims are not required where self rimming type sinks are provided.

2.3.4 Backer Sheets

Backer sheets of high pressure plastic laminate Grade BK20 shall be applied to the underside of all core material.

2.4 VANITY TOPS

Vanity tops shall be fabricated from a decorative solid composite mineral/acrylic surfacing material with color and pattern extending through the body of the material.

2.5 WINDOW STOOLS

Window stools shall be constructed as indicated on the drawings of the same materials as vanity tops.

2.6 HARDWOOD TRIM AND MOLDINGS

Hardwood trim and moldings shall be milled from quarter sawn White Oak, AWI grade I or II. Trim and molding shapes shall be as indicated on the drawings. All hardwood is to receive a transparent finish unless indicated otherwise on the drawings.

This section revised
by AMDT 0001

PART 3 EXECUTION

3.1 INSTALLATION

3.1.1 Wall and Base Cabinets

Wall and base cabinets shall be installed level, plumb, and true to line, and shall be attached to the walls or floors with suitable devices to securely anchor each unit. Countertops, accessories and hardware shall be installed as indicated. Joints with walls or other similar construction shall be maintained at 1/8 inch and filled with a continuous bead of No. 1 Caulking Compound. Color shall match the color of the countertop or millwork item making the junction. Closer and filler strips shall be provided as required to scribe to adjacent construction. Prior to final acceptance, the Contractor shall align all doors, adjust all hardware, and leave cabinets in a clean and neat condition.

3.1.2 Window Stools

Window stools shall be carefully trimmed to the contour and profile of the window opening and set in a full bed of mastic. Edges of sill shall be held back 1/8 inch from adjoining construction (wall jambs, window frame, etc.) and sealed with a continuous bead of colored caulk. Depth of caulk shall be a minimum of 1/4 inch. Caulk shall be tooled flush with the surface of the stool.

3.2 HARDWOOD TRIM AND MOLDINGS

Hardwood trim and moldings shall be installed in accordance with AWI Architectural Woodwork Quality Standards for Premium Grade Architectural Woodwork.

3.3 CAULKING is covered in SECTION; 07900 JOINT SEALING.

-- End of Section --

This section revised
by AMDT 0001

SECTION 07210

BUILDING INSULATION

PART 1 GENERAL

1.1 REFERENCES

The publications listed below form a part of this specification to the extent referenced. The publications are referred to in the text by basic designation only.

AMERICAN SOCIETY FOR TESTING AND MATERIALS (ASTM)

ASTM C 518	(1991) Steady-State Heat Flux Measurements and Thermal Transmission Properties By Means of the Heat Flow Meter Apparatus
ASTM C 552	(1991) Cellular Glass Thermal Insulation
ASTM C 553	(1992) Mineral Fiber Blanket Thermal Insulation for Commercial and Industrial Applications
ASTM C 578	(1995) Rigid Preformed, Cellular Polystyrene Thermal Insulation
ASTM C 591	(1994) Unfaced Preformed Rigid Cellular Polyisocyanurate Thermal Insulation
ASTM C 665	(1994) Mineral-Fiber Blanket Thermal Insulation for Light Frame Construction and Manufactured Housing

1.2 SUBMITTALS

Government approval is required for submittals with a "GA" designation; submittals having an "FIO" designation are for information only. The following shall be submitted in accordance with Section 01330 SUBMITTAL PROCEDURES:

SD-01 Data

Thermal Insulation; FIO. Acoustical Insulation; FIO.

Manufacturer's descriptive data.

SD-13 Certificates

Thermal Insulation; FIO. Acoustical Insulation; FIO

Manufacturer's certificates attesting that insulation provided meets the specified requirements.

1.3 DELIVERY AND STORAGE

Materials shall be delivered to the site in undamaged condition, stored off ground in fully covered, well ventilated areas, and protected from moisture

PART 2 PRODUCTS

2.1 THERMAL INSULATION

Thermal resistance of insulation shall be not less than the R-values shown. R-values shall be determined at 75 degrees F in accordance with ASTM C 518. Insulation shall contain the highest practicable percentage of recovered material which has been recovered or diverted from solid waste, but not including material reused in a manufacturing process. Where two materials have the same price and performance, the one containing the higher recovered material content shall be provided. Insulation shall be the standard product of a manufacturer and factory marked or identified with manufacturer's name or trademark and R-value. Identification shall be on individual pieces or individual packages. Materials containing more than one percent asbestos will not be allowed. Insulation shall conform to the following:

2.1.1 Type A Insulation

Rigid board; polystyrene conforming to ASTM C 578, Type II, polyurethane conforming to ASTM C 591, Type II or cellular glass conforming to ASTM C 552, Type I or IV. Thermal resistance, 'R', shall be not less than 6.

2.1.2 Type B Insulation

Rigid board; polyurethane conforming to ASTM C 591; or extruded polystyrene conforming to ASTM C 578, Type IV. Maximum thickness shall be one inch and the thermal resistance, 'R', shall be not less than 6.

2.1.3 Type C Insulation

Batt or blanket; glass fiber conforming to ASTM C 665, Type I (unfaced); mineral fiber conforming to ASTM C 665, Type I (unfaced); or mineral fiber conforming to ASTM C 553, Type I, class 6 (unfaced). Width is optional. Thermal resistance ,'R', shall be not less than 30.

2.2 ACOUSTICAL INSULATION

Unfaced mineral fiber blanket insulation produced by combining mineral fibers of glass or slag or a combination of glass and slag with thermosetting resins to comply with ASTM C 665 for Type I (blankets without membrane facing). Density of acoustical batts shall be not less than 4 pounds per cubic foot.

PART 3 EXECUTION

3.1 INSTALLATION OF INSULATION

Insulation shall be installed after construction has advanced to a point that the installed insulation will not be damaged by remaining work. For thermal insulation the actual installed thickness shall provide the R-values shown. For acoustical insulation the installed thickness shall be as shown. Insulation shall be installed on the weather side of such items as electrical boxes and water lines. Unless otherwise specified, installation shall be in accordance with the manufacturer's recommendation.

-- End of Section --

SECTION 07240

EXTERIOR INSULATION AND FINISH SYSTEM

PART 1 GENERAL

1.1 REFERENCES

The publications listed below form a part of this specification to the extent referenced. The publications are referred to in the text by basic designation only.

AMERICAN SOCIETY FOR TESTING AND MATERIALS (ASTM)

ASTM B 117	(1994) Operating Salt Spray (Fog) Testing Apparatus
ASTM C 67	(1994) Sampling and Testing Brick and Structural Clay Tile
ASTM C 578	(1992) Rigid, Cellular Polystyrene Thermal Insulation
ASTM C 920	(1987) Elastomeric Joint Sealants
ASTM C 1149	(1990) Self-Supported Spray-Applied Cellulosic Thermal or Acoustical Insulation, or Both
ASTM D 968	(1993) Abrasion Resistance of Organic Coatings by Falling Abrasive
ASTM E 84	(1995) Surface Burning Characteristics of Building Materials
ASTM E 96	(1994) Water Vapor Transmission of Materials
ASTM E 330	(1990) Structural Performance of Exterior Windows, Curtain Walls, and Doors by Uniform Static Air Pressure Difference
ASTM G 23	(1995) Operating Light-Exposure Apparatus (Carbon-Arc Type) With and Without Water for Exposure of Nonmetallic Materials
ASTM G 53	(1993) Operating Light- and Water-Exposure Apparatus (Fluorescent UV-Condensation Type) For Exposure of Nonmetallic Materials

EIFS INDUSTRY MEMBERS ASSOCIATION (EIMA)

EIMA 101.86	(1992; Rev May 1994) Resistance of Exterior Insulation and Finish Systems to the Effects of Rapid Deformation (Impact)

INTERNATIONAL CONFERENCE OF BUILDING OFFICIALS (ICBO)

ICBO-102S94 (1994) Uniform Building Code Standards: Uniform Building Code, Vol. III

1.2 DESCRIPTION

The exterior insulation and finish system (EIFS) shall be a job-fabricated exterior wall covering consisting of insulation, reinforcing fabric, base coat, finish coat, and accessories. The system shall be the standard product of a manufacturer regularly engaged in furnishing exterior insulation and finish systems and shall be installed by an applicator approved by the system manufacturer. EIFS shall be polymer base, Class PB. Color and finish shall match the color and finish indicated in Section 09915 COLOR SCHEDULE.

1.3 PERFORMANCE REQUIREMENTS

1.3.1 Test Specimens

Unless otherwise noted, the test specimens shall consist of reinforcement, base coat and finish coat applied in accordance with the manufacturer's printed recommendations to an insulation board common to the system. These test specimens shall be suitably sized for the apparatus used and be allowed to cure for a minimum of 28 days prior to testing.

1.3.1.1 Flame Spread

Flame spread test samples consist of base coat, fabric and finish coat, mounted on a non-combustible substrate. When tested in accordance with ASTM E 84, the samples shall have a flame spread rating of 25 or less.

1.3.1.2 Full Scale Wall Fire Test

Full scale wall fire test specimens shall include the complete system with no less than 4 inches of insulation. Test shall be performed in accordance with ICBO-102S94, Section 17-6. The specimen shall not contribute to significant or horizontal flame spread.

1.3.2 Impact Test

The exterior insulation and finish system shall have been tested in accordance with EIMA 101.86 using a specimen consisting of cured finish system over 1 inch thick insulation with base coat and reinforcing fabric in a complete assembly typical of the project application. Specimen shall withstand an impact of 25-49 inch-pounds except where the system is installed adjacent to or within 5 feet of doors. At those locations, the portion of the system below 6 feet above the floor shall withstand an impact of 90-150 inch pounds.

1.3.3 Structural Performance Test

The system shall have been tested in accordance with ASTM E 330 to minimum positive and negative pressures of 20 psf. Test panels shall be 4 feet by 4 feet minimum, consisting of the typical system assembly.

1.4 SUBMITTALS

Government approval is required for submittals with a "GA" designation; submittals having an "FIO" designation are for information only. The following shall be submitted in accordance with Section 01330 SUBMITTAL PROCEDURES:

SD-06 Instructions

Exterior Insulation and Finish System; FIO.

Two copies of manufacturer's standard printed instructions for installation of the system. Instructions shall include manufacturer's recommended details for corner treatment, jambs, sills, openings, joints and other special applications.

SD-09 Reports

Exterior Insulation and Finish System; FIO.

Test Reports indicating that the system complies with the specified performance tests. Tests shall be by an approved, independent testing laboratory.

SD-14 Samples

Exterior Insulation and Finish System; GA.

Two samples of each exterior insulation and finish system. Each sample shall be one foot square, minimum, and shall be identical to the proposed installation in thickness, color, texture, insulation and workmanship.

SD-08 Statements

Manufacturer's Approval and License; FIO.

Statement from manufacturer attesting that the applicator is approved and licensed to install the system.

1.5 DELIVERY AND STORAGE

Materials shall be delivered to the jobsite in their original unopened packages, clearly marked with the manufacturer's name, brand name, and description of contents. Storage shall be in accordance with the manufacturer's recommendations in a clean, dry, well-ventilated area. Stored materials shall be protected from sunlight, and kept away from excessive heat. Coating materials which would be damaged by freezing shall be kept at a temperature not less than 40 degrees F. Insulation board shall not be exposed to flame or other ignition sources.

PART 2 PRODUCTS

2.1 ADHESIVE

Adhesive shall be the manufacturer's standard product, including primer as required, and shall be compatible with the substrate to which the system is applied.

2.2 INSULATION

Insulation shall conform to ASTM C 578, type as recommended by the system manufacturer and shall be compatible with other system components. Insulation shall be aged a minimum of 6 weeks by air drying, or equivalent prior to installation. Insulation shall be a standard product of the manufacturer and shall be factory marked with the manufacturer's name or trade mark, the material specification number, the R-value at 75 degrees F, and thickness. Thickness of insulation shall be based on specified R-value, but no single layer shall be less than 3/4 inch thick and the total thickness shall be not less than 2 inches in the field and 1 inch at the recessed archways. Boards shall be marked individually. The thermal resistance of insulation in the system shall be not less than 10 in the field and 5 at the recessed archways.

2.3 BASE COAT

Base coat shall be the manufacturer's standard product and shall be compatible with the finish coat.

2.4 REINFORCING FABRIC

Reinforcing fabric shall be balanced, open weave, glass fiber fabric made from twisted multi-end strands specifically treated for compatibility with the other materials of the system.

2.5 FINISH COATING

Finish coating shall be manufacturer's standard product, uniform in color and conforming to the following requirements. Specimens for tests shall have been cured for a minimum of 28 days.

TEST	METHOD	RESULTS
Abrasion Resistance	ASTM D 968	528 quarts of sand-slight - smoothing - no loss of film integrity.
Accelerated weathering Light and water exposure	ASTM G 23 or ASTM G 53	2000 hours. No deterioration
Mildew-fungus resistance	ASTM C 1149	Expose for 28 days at 95 percent RH, 90 degrees F temperature. No growth of mildew or fungus.
Salt spray resistance	ASTM B 117	Withstand 300 hours - No deleterious effects.
Water vapor	ASTM E 96	Not more than 18 grains an hour per square foot.

TEST	METHOD	RESULTS
Absorption-freeze (Pre-weighed 4" by 8" specimens; 1" insulation, faced with finish coat cured and stored in air; tested with edges and back open.)	ASTM C 67 50 Cycles: 20 hrs. at -9 degrees C; 4-hr. thaw in water	After 50 cycles - Total weight gain of not more than 6.2 grams. No checking, splitting, or cracking.

2.6 SEALANT

Sealant shall meet requirements of ASTM C 920, Class 25, and shall be compatible with the finish system. Type, Grade, and Use shall be as recommended by both the sealant manufacturer and the system manufacturer. When required, primer, bond breaker and backstop shall be non-staining, and as recommended by the sealant manufacturer and the system manufacturer.

2.7 ACCESSORIES

Accessories shall conform to the drawings and recommendations of the system manufacturer and shall include trim, edging, sealant and filler rod required for proper installation of the system.

PART 3 EXECUTION

3.1 SURFACE PREPARATION

Surface shall be free of oil, loose materials or protrusions which will interfere with the system installation.

3.2 ENVIRONMENTAL CONDITION

Unless a higher temperature is required by the system manufacturer, the ambient air temperature shall be 40 degrees F or greater and rising at the time of installation of the system and shall be predicted to remain at 40 degrees F or greater for at least 24 hours after installation.

3.3 INSULATION BOARD AND REINFORCING FABRIC

Unless otherwise specified by the system manufacturer, insulation boards shall be placed horizontally from a level base line. Vertical joints shall be staggered and insulation boards interlocked at corners. Joints of insulation shall be butted tightly. Surfaces of adjacent insulation boards shall be flush at joints. Joints of insulation shall be offset from substrate joints. Reinforcing glass fabric shall be installed in accordance with the manufacturer's instructions. Heavy duty mesh shall be installed adjacent to and within 5 feet of doorways in that portion of the wall below a line 6 feet above the floor.

3.4 ADHESIVE SYSTEM

Primer (if required by the manufacturer) and adhesive shall be prepared and applied with a stainless steel trowel to substrate in accordance with the manufacturer's instructions. The pattern of the reinforcing fabric shall not be visible.

3.5 BASE COAT

Base coat shall be mixed in accordance with the manufacturer's instructions and applied to insulated wall surfaces, trowelling the material into the reinforcing fabric in a tight coat and doubling back to provide complete coverage of the reinforcing fabric, panel joints and fasteners. Base coat may be used to level out surface areas when permitted by the manufacturer.

3.6 FINISH COATING

Finish coating shall be applied and leveled in one operation. Final texture shall be obtained by trowels, floats, or by spray application as necessary to achieve the required finish. Finish surfaces shall be plane, with no deviation greater than 1/4 inch when tested with a 10 foot straightedge.

3.7 SEALANT

Edges of the exterior insulation and finish system shall be sealed at openings as recommended by the system manufacturer.

-- End of Section --

SECTION 07270

FIRESTOPPING

PART 1 GENERAL

1.1 REFERENCES

The publications listed below form a part of this specification to the extent referenced. The publications are referred to in the text by basic designation only.

AMERICAN SOCIETY FOR TESTING AND MATERIALS (ASTM)

ASTM E 84	(1995a) Surface Burning Characteristics of Building Materials
ASTM E 814	(1994b) Fire Tests of Through-Penetration Fire Stops

UNDERWRITERS LABORATORIES (UL)

UL-05	(1995; Supple) Fire Resistance Directory
UL 723	(1993; Rev Apr 1994) Test for Surface Burning Characteristics of Building Materials
UL 1479	(1994) Fire Tests of Through-Penetration Firestops

1.2 SUBMITTALS

Government approval is required for submittals with a "GA" designation; submittals having an "FIO" designation are for information only. The following shall be submitted in accordance with Section 01330 SUBMITTAL PROCEDURES:

SD-04 Drawings

Firestopping Materials; FIO.

Detail drawings including manufacturer's descriptive data, typical details, installation instructions and the fire-test data and/or report as appropriate for the fire resistance rated construction and location. Submittal shall indicate the firestopping material to be provided for each type of application. When more than 5 penetrations are to receive firestopping, drawings shall indicate location and type of application.

SD-13 Certificates

Firestopping Materials; FIO.

Certificates attesting that firestopping material complies with the specified requirements. The label or listing of the Underwriters Laboratories will be acceptable evidence. In lieu of the label or listing, a written certificate may be submitted from an approved, nationally recognized testing agency

equipped to perform such services, stating that the items have been tested and conform to the specified requirements and testing methods.

Installer Qualifications; FIO.

Certification stating that installer is qualified and trained to install the specified firestopping material.

Inspection; FIO.

Manufacturer's representative certification stating that firestopping work has been inspected and found to be applied according to the manufacturer's recommendations and the specified requirements.

1.3 GENERAL REQUIREMENTS

Firestopping shall consist of furnishing and installing a material or a combination of materials to form an effective barrier against the spread of flame, smoke and gases, and maintain the integrity of fire resistance rated walls, partitions, floors, and ceiling-floor assemblies, including through-penetrations and construction joints. Through-penetrations include the annular space around pipes, tubes, conduit, wires, cables and vents. Construction joints include those used to accommodate expansion, contraction, wind, or seismic movement; firestopping material shall not interfere with the required movement of the joint.

1.4 STORAGE AND DELIVERY

Materials shall be delivered in the original unopened packages or containers showing name of the manufacturer and the brand name. Materials shall be stored off the ground and shall be protected from damage and exposure to elements. Damaged or deteriorated materials shall be removed from the site.

1.5 INSTALLER QUALIFICATIONS

Installer of firestopping material shall be trained by the manufacturer or the manufacturer's representative, and shall have a minimum of 3 years experience in the installation of firestopping of the type specified.

PART 2 PRODUCTS

2.1 FIRESTOPPING MATERIALS

Firestopping materials shall consist of commercially manufactured products complying with the following minimum requirements:

2.1.1 Fire Hazard Classification

Material shall have a flame spread of 25 or less, and a smoke developed rating of 50 or less, when tested in accordance with ASTM E 84 or UL 723. Material shall be an approved firestopping material as listed in UL-05.

2.1.2 Toxicity

Material shall be nontoxic to humans at all stages of application.

2.1.3 Fire Resistance Rating

Firestopping will not be required to have a greater fire resistance rating than that of the assembly in which it is being placed.

2.1.3.1 Through-Penetrations

Firestopping materials for through-penetrations, as described in paragraph GENERAL REQUIREMENTS, shall provide "F" and "T" fire resistance ratings in accordance with ASTM E 814 or UL 1479, except that T Ratings are not required for penetrations smaller than or equal to a 4 inch nominal pipe or 16 square inches in overall cross sectional area. Fire resistance ratings shall be not less than the assembly being fire stopped.

2.1.3.2 Construction Joints and Gaps

Fire resistance ratings of construction joints, as described in paragraph GENERAL REQUIREMENTS, and gaps such as those between roof decks and walls shall be the same as the construction in which they occur.

PART 3 EXECUTION

3.1 PREPARATION

Areas to receive firestopping shall be free of dirt, grease, oil, or loose materials which may affect the fitting or fire resistance of the firestopping system.

3.2 INSTALLATION

Firestopping material shall completely fill void spaces regardless of geometric configuration, subject to tolerance established by the manufacturer. Firestopping for filling floor voids 4 inches or more in any direction shall be capable of supporting the same load as the floor is designed to support or shall be protected by a permanent barrier to prevent loading or traffic in the firestopped area. Firestopping shall be installed in accordance with manufacturer's written instructions. Firestopping shall be provided in the following locations, except in floor slabs on grade:

a. Penetrations of duct, conduit, tubing, cable and pipe through fire-resistance rated walls, partitions, and ceiling-floor assemblies.

b. Gaps at perimeter of fire-resistance rated walls and partitions, such as between the top of the walls and the bottom of roof decks.

c. Construction joints in fire rated walls and partitions.

d. Other locations where required to maintain fire resistance rating of the construction.

3.3 INSPECTION

Firestopped areas shall not be covered or enclosed until inspection is complete and approved. A manufacturer's representative shall inspect the applications initially to ensure adequate preparations (clean surfaces suitable for application, etc.) and periodically during the work to assure

that the completed work has been accomplished according to the manufacturer's written instructions and the specified requirements.

-- End of Section --

SECTION 07416

STRUCTURAL STANDING SEAM METAL ROOF (SSSMR) SYSTEM

PART 1 GENERAL

1.1 REFERENCES

The publications listed below form a part of this specification to the extent referenced. The publications are referred to in the text by basic designation only.

AMERICAN INSTITUTE OF STEEL CONSTRUCTION (AISC)

AISC-04	(1989) Specification for Structural Steel Buildings - Allowable Stress Design, Plastic Design

AMERICAN IRON AND STEEL INSTITUTE (AISI)

AISI-01	(1986; Addenda 1989) Cold-Formed Steel Design Manual

AMERICAN SOCIETY FOR TESTING AND MATERIALS (ASTM)

ASTM A 463	(1996a) Steel Sheet, Aluminum-Coated, by the Hot-Dip Process
ASTM A 653	(1996) Steel Sheet, Zinc-Coated (Galvanized) or Zinc-Iron Alloy-Coated (Galvannealed) by the Hot-Dip Process
ASTM A 792	(1995) Steel Sheet, 55% Aluminum-Zinc Alloy-Coated by the Hot-Dip Process
ASTM B 117	(1994) Operating Salt Spray (Fog) Testing Apparatus
ASTM C 518	(1991) Steady-State Heat Flux Measurements and Thermal Transmission Properties by Means of the Heat Flow Meter Apparatus
ASTM C 991	(1992) Flexible Glass Fiber Insulation for Pre-Engineered Metal Buildings
ASTM D 522	(1993a) Mandrel Bend Test of Attached Organic Coatings
ASTM D 714	(1987; R 1994) Evaluating Degree of Blistering of Paints
ASTM D 968	(1993) Abrasion Resistance of Organic Coatings by Falling Abrasive
ASTM D 1308	(1987; R 1993) Effect of Household Chemicals on Clear and Pigmented Organic Finishes

ASTM D 1654	(1992) Evaluation of Painted or Coated Specimens Subjected to Corrosive Environments
ASTM D 2244	(1993) Calculation of Color Differences from Instrumentally Measured Color Coordinates
ASTM D 2247	(1994) Testing Water Resistance of Coatings in 100% Relative Humidity
ASTM D 2794	(1993) Resistance of Organic Coatings to the Effects of Rapid Deformation (Impact)
ASTM D 3359	(1995) Measuring Adhesion by Tape Test
ASTM D 4214	(1989) Evaluating the Degree of Chalking of Exterior Paint Films
ASTM D 4587	(1991) Conducting Tests on Paint and Related Coatings and Materials Using a Fluorescent UV-Condensation Light- and Water-Exposure Apparatus
ASTM E 84	(1996a) Surface Burning Characteristics of Building Materials
ASTM E 96	(1995) Water Vapor Transmission of Materials
ASTM E 1592	(1995) Structural Performance of Sheet Metal Roof and Siding Systems by Uniform Static Air Pressure Difference

AMERICAN SOCIETY OF CIVIL ENGINEERS (ASCE)

ASCE 7	(1995) Minimum Design Loads for Buildings and Other Structures

1.2 GENERAL REQUIREMENTS

The Contractor shall furnish a manufacturer's standard product which satisfies all requirements contained herein and has been verified by load testing and independent design analyses to meet the specified design requirements.

1.2.1 Manufacturer

The SSSMR system shall be the product of a manufacturer who has been in the practice of manufacturing SSSMR systems for a period of not less than 3 years and has been involved in at least five projects similar in size and complexity to this project.

1.2.2 Installer

The installer shall be certified by the SSSMR system manufacturer to have experience in installing at least three projects that are of comparable size, scope and complexity as this project for the particular roof system furnished. The installer may be either employed by the manufacturer or be an independent installer.

1.3 DESIGN REQUIREMENTS

The design of the SSSMR system shall be provided by the Contractor as a complete system. Members and connections not indicated on the drawings shall be designed by the Contractor. Roof panels, components, transitions, accessories, and assemblies shall be supplied by the same manufacturer.

1.3.1 Design Criteria

Design criteria shall be in accordance with ASCE 7 unless otherwise specified.

1.3.2 Dead Loads

The dead load shall be the weight of the SSSMR system. Collateral loads such as sprinklers, mechanical and electrical systems, and ceilings shall not be attached to the panels.

1.3.3 Live Loads

1.3.3.1 Concentrated Loads

The panels and anchor clips shall be capable of supporting a 300 pound concentrated load. The concentrated load shall be applied at the panel midspan and will be resisted by a single standing seam metal roof panel assumed to be acting as a beam. The undeformed shape of the panel shall be used to determine the section properties.

1.3.3.2 Uniform Loads

The panels and concealed anchor clips shall be capable of supporting the minimum uniform live load indicated on the contract drawings.

1.3.4 Roof Snow Loads

The design roof snow loads shall be as shown on the contract drawings.

1.3.5 Wind Loads

The design wind uplift pressure for the roof system shall be as shown on the contract drawings. The design uplift force for each connection assembly shall be that pressure given for the area under consideration, multiplied by the tributary load area of the connection assembly. The safety factor listed below shall be applied to the design force and compared against the ultimate capacity. Prying shall be considered when figuring fastener design loads.

a. Single fastener in each connection.....3.0
b. Two or more fasteners in each connection...2.25

1.3.6 Thermal Loads

Roof panels shall be free to move in response to the expansion and contraction forces resulting from a total temperature range of 200 degrees F during the life of the structure.

1.3.7 Framing Members Supporting the SSSMR System

The Contractor is responsible for the design of the purlin system, including any required bridging or bracing, and the design of the purlin connection to the primary structural frame but is not responsible for the design of the primary structural frame which supports the purlins.

Any additions/revisions to primary framing members supporting the purlins to accommodate the manufacturer/fabricator's design shall be the Contractor's responsibility and shall be submitted for review and approval. New or revised framing members and their connections shall be designed in accordance with AISC-04 or AISI-01. Maximum deflection of the purlin system under applied live load, snow, or wind load shall not exceed 1/180 of the span length.

1.3.8 Roof Panels Design

Panels shall be designed in accordance with AISI-01. The structural section properties used in the design of the panels shall be determined using the unloaded shape of the roof panels. The calculated panel deflection from concentrated loads shall not exceed 1/180 of the span length. The calculated panel deflection under applied live load, snow, or wind load shall not exceed 1/180 times the span length. Deflections shall be based on panels being continuous across three or more supports. Deflection shall be calculated and measured along the major ribs of the panels.

1.3.9 Accessories and Their Fasteners

Accessories and their fasteners shall be capable of resisting the specified design wind uplift forces and shall allow for thermal movement of the roof panel system. Exposed fasteners shall not restrict free movement of the roof panel system resulting from thermal forces. There shall be a minimum of two fasteners per clip. Single fasteners with a minimum diameter of 3/8 inch will be allowed when the supporting structural members are prepunched or predrilled.

1.4 PERFORMANCE REQUIREMENTS

The SSSMR shall be tested for wind uplift resistance in accordance with ASTM E 1592; SSSMR systems previously tested and approved by the Corps of Engineers' STANDARD TEST METHOD FOR STRUCTURAL PERFORMANCE OF SSMRS BY UNIFORM STATIC AIR PRESSURE DIFFERENCE may be acceptable. Two tests shall be performed. Test 1 shall simulate the edge condition with one end having crosswise restraint and other end free of crosswise restraint. The maximum span length for the edge condition shall be 30 inches. Test 2 shall simulate the interior condition with both ends free of crosswise restraint. The maximum span length for the interior condition shall be 5.0 feet. External reinforcement, such as clamps on the ribs, shall not be installed to improve uplift resistance. Bolts through seams shall not be installed.

1.5 SUBMITTALS

Government approval is required for submittals with a "GA" designation; submittals having an "FIO" designation are for information only. The following shall be submitted in accordance with Section 01330 SUBMITTAL PROCEDURES:

SD-01 Data

Design Analysis; GA.

Design analysis signed by a Registered Professional Engineer employed by the SSSMR manufacturer. The design analysis shall include a list of the design loads, and complete calculations for the support system (purlins), roofing system and its components; valley designs, gutter/downspout calculations, screw pullout test results, and shall indicate how expected thermal movements are accommodated.

SD-04 Drawings

Structural Standing Seam Metal Roof System; GA.

Metal roofing drawings and specifications and erection drawings; shop coating and finishing specifications; and other data as necessary to clearly describe design, materials, sizes, layouts, standing seam configuration, construction details, provisions for thermal movement, line of panel fixity, fastener sizes and spacings, sealants and erection procedures. Drawings shall reflect the intent of the architectural detailing using the manufacturer's proprietary products and fabricated items as required. The SSSMR system shop drawings shall be provided by the metal roofing manufacturer.

SD-08 Statements

Qualifications; FIO.

Qualifications of the manufacturer and installer.

SD-09 Reports

Test Report for Uplift Resistance of the SSSMR; GA.

The report shall include the following information:

a. Details of the SSSMR system showing the roof panel cross-section with dimensions and thickness.

b. Details of the anchor clip, dimensions, and thickness.

c. Type of fasteners, size, and the number required for each connection.

d. Purlins size and spacing used in the test.

e. Description of the seaming operation including equipment used.

f. Maximum allowable uplift pressures. These pressures are determined from the ultimate load divided by a factor of safety equal to 1.65.

g. Any additional information required to identify the SSSMR system tested.

h. Signature and seal of an independent registered engineer who witnessed the test.

SD-13 Certificates

Structural Standing Seam Metal Roof System; GA.

a. Certification that the actual thickness of uncoated sheets used in SSSMRS components including roofing panels, subpurlins, and concealed anchor clips complies with specified requirements.

b. Certification that materials used in the installation are mill certified.

c. Previous certification of SSSMR system tested under the Corps of Engineers' Standard Test Method in lieu of ASTM E 1592 testing.

d. Certification that the sheets to be furnished are produced under a continuing quality control program and that a representative sample consisting of not less than three pieces has been tested and has met the quality standards specified for factory color finish.

e. Certification of installer.

f. Warranty certificate. At the completion of the project the Contractor shall furnish signed copies of the 5-year Warranty for Structural Standing Seam Metal Roof (SSSMR) System, a sample copy of which is attached to this section, and the 20-year Manufacturer's Material Warranties.

SD-14 Samples

Accessories; GA.

One sample of each type of flashing, trim, closure, thermal spacer block, cap and similar items. Size shall be sufficient to show construction and configuration.

Roof Panels; GA.

One piece of each type to be used, 9 inches long, full width.

Factory Color Finish; GA.

Three 3 by 5 inches samples of each type and color.

Fasteners; GA.

Two samples of each type to be used, with statement regarding intended use. If so requested, random samples of bolts, nuts, and washers as delivered to the job site shall be taken in the presence of the Contracting Officer and provided to the Contracting Officer for testing to establish compliance with specified requirements.

Insulation; FIO.

One piece, 12 by 12 inches, of each type and thickness to be used, with a label indicating the rated permeance (if faced) and R-values. The flame spread, and smoke developed rating shall be shown on the label or provided in a letter of certification.

Gaskets and Insulating Compounds; FIO.

Two samples of each type to be used and descriptive data.

Sealant; FIO.

One sample, approximately 1 pound, and descriptive data.

Concealed Anchor Clips; GA.

Two samples of each type used.

Purlins; GA.

One piece, 9 inches long.

EPDM Rubber Boots; FIO.

One piece of each type.

1.6 DELIVERY AND STORAGE

Materials shall be delivered to the site in a dry and undamaged condition and stored out of contact with the ground. Materials shall be covered with weathertight coverings and kept dry. Storage conditions shall provide good air circulation and protection from surface staining.

1.7 WARRANTIES

The SSSMR system shall be warranted as outlined below. Any emergency temporary repairs conducted by the owner shall not negate the warranties.

1.7.1 Contractor's Weathertightness Warranty

The SSSMR system shall be warranted by the Contractor on a no penal sum basis for a period of five years against material and workmanship deficiencies; system deterioration caused by ordinary exposure to the elements and service design loads, water leaks, and wind uplift damage. The SSSMR system covered under this warranty shall include the entire roofing system including, but not limited to, the following: panel seams and joint, all accessories, components and trim; penetrations such as vents, curbs, and skylights; interior or exterior gutters and downspouts; eaves, ridge, hip, valley, rake, gable, wall, or other roof system flashings installed to provide a weathertight roof system; and items specified in other sections of these specifications that become part of the structural standing seam metal roof system. All material and workmanship deficiencies, system deterioration caused by ordinary exposure to the elements and service design loads, water leaks and wind uplift damage shall be repaired as approved by the Contracting Officer. This warranty shall warrant and cover the entire cost of repair or replacement, including all material, labor, and related markups. The Contractor may supplement this warranty with written warranties from the installer and/or manufacturer, which shall be submitted along with Contractor's warranty; however, the Contractor shall be ultimately responsible for this warranty. The Contractor's written warranty shall be as outlined in attached example WARRANTY FOR STRUCTURAL STANDING SEAM METAL ROOF (SSSMR) SYSTEM, and shall start upon final acceptance of the facility or the date the Government takes possession, whichever is

earlier. It shall be understood that the Contractor's Performance Bond will remain effective throughout the five year Contractor's warranty period for the entire SSSMR system as outlined above.

1.7.2 Manufacturer's Material Warranties.

The Contractor shall furnish, in writing, the following manufacturer's material warranties which cover all SSSMR system components such as roof panels, anchor clips and fasteners, flashing, accessories, and trim, fabricated from coil material:

a. A manufacturer's 20 year material warranty warranting that the aluminum, zinc-coated steel, aluminum-zinc alloy coated steel or aluminum-coated steel as specified herein will not rupture, structurally fail, fracture, deteriorate, or become perforated under normal design atmospheric conditions and service design loads. Liability under this warranty shall be limited exclusively to the cost of either repairing or replacing nonconforming, ruptured, perforated, or structurally failed coil material.

b. A manufacturer's 20 year exterior material finish warranty on the factory colored finish warranting that the finish, under normal atmospheric conditions at the site, will not crack, peel, or delaminate; chalk in excess of a numerical rating of eight, as determined by ASTM D 4214 test procedures; or change color in excess of five CIE or Hunter Lab color difference (delta E) units in accordance with ASTM D 2244. Liability under this warranty is exclusively limited to refinishing with an air-drying version of the specified finish or replacing the defective coated material.

PART 2 PRODUCTS

2.1 ROOF PANELS

Panels shall be steel and shall have a factory color finish. Length of sheets shall be sufficient to cover the entire length of any unbroken roof slope for slope lengths that do not exceed 30 feet. When length of run exceeds 30 feet and panel laps are provided, each sheet in the run shall extend over three or more supports. Sheets longer than 100 feet may be furnished if approved by the Contracting Officer. Width of sheets shall provide not more than 24 inches of coverage in place. Standing seams shall be rolled during installation by an electrically driven seaming machine. Height of standing seams shall be not less than 2-1/2 inches.

2.1.1 Roof Panel Construction

Panels shall be zinc-coated steel conforming to ASTM A 653; aluminum-zinc alloy coated steel conforming to ASTM A 792, AZ 55 coating; or aluminum-coated steel conforming to ASTM A 463, Type 2, coating designation T2 65. Uncoated panels shall be 0.0239 inch thick minimum. Panels shall be within 95 percent of tested thickness.

2.2 CONCEALED ANCHOR CLIPS

Concealed anchor clips shall be the same as the tested roofing system. Clip bases shall have factory punched or drilled holes for attachment. Clips shall be made from multiple pieces with the allowance for the total thermal movement

required to take place within the clip. Single piece clips may be acceptable when the manufacturer can substantiate that the system can accommodate the thermal cyclic movement under sustained live or snow loads.

2.3 ACCESSORIES

Flashing, trim, metal closure strips, caps and similar metal accessories shall be the manufacturer's standard products. Exposed metal accessories shall be finished to match the panels furnished. Molded closure strips shall be bituminous-saturated fiber, closed-cell or solid-cell synthetic rubber or neoprene, or polyvinyl chloride premolded to match configuration of the panels and shall not absorb or retain water. Die cast metal closures shall be installed with double bead tape sealant and fasteners that stitch the panel to a 16 gauge preformed backer plate to ensure a positive compression of the tape sealant. The use of a continuous angle butted to the panel ends to form a closure will not be allowed.

2.4 FASTENERS

Fasteners for roof panels shall be zinc-coated steel, aluminum, corrosion resisting steel, or nylon capped steel, type and size specified below or as otherwise approved for the applicable requirements. Fasteners for structural connections shall provide both tensile and shear ultimate strengths of not less than 750 pounds per fastener. Fasteners for accessories shall be the manufacturer's standard. Exposed roof fasteners shall be sealed or have sealed washers on the exterior side of the roof to waterproof the fastener penetration. Washer material shall be compatible with the roofing; have a minimum diameter of 3/8 inch for structural connections; and gasketed portion of fasteners or washers shall be neoprene or other equally durable elastomeric material approximately 1/8 inch thick. Exposed fasteners for factory color finished panels shall be factory finished to match the color of the panels.

2.4.1 Screws

Screws for attaching anchor devices shall be not less than No. 14. Actual screw pull out test results shall be performed for the actual material gage and yield strength of the structural purlins or subpurlins to which the clip is to be anchored/attached. Other screws shall be as recommended by the manufacturer to meet the strength design requirements of the panels.

2.4.2 Bolts

Bolts shall be not less than 1/4 inch diameter, shouldered or plain shank as required, with locking washers and nuts.

2.4.3 Structural Blind Fasteners

Blind screw-type expandable fasteners shall be not less than 1/4 inch diameter. Blind (pop) rivets shall be not less than 9/32 inch minimum diameter.

2.5 PURLINS

Cold formed supporting structural members/purlins shall have a minimum thickness of 0.059 inches and a minimum tensile yield strength of 50000 psi. Hot rolled structural members shall have a minimum thickness of 0.25 inches

and a minimum tensile yield strength of 36000 psi. Purlins shall be galvanized or given one coat of shop paint.

2.6 FACTORY COLOR FINISH

Panels shall have a factory applied polyvinylidene fluoride finish on the exposed side. The exterior finish shall consist of a baked-on topcoat with an appropriate prime coat. Color shall match the color indicated in Section 09915 COLOR SCHEDULE. The exterior coating shall be a nominal 2 mil thickness consisting of a topcoat of not less than 0.7 mil dry film thickness and the paint manufacturer's recommended primer of not less than 1.0 mil thickness. The interior color finish shall consist of a 0.2 mil thick prime coat. The exterior color finish shall meet the test requirements specified below.

2.6.1 Salt Spray Test

A sample of the sheets shall withstand a salt spray test for a minimum of 1000 hours in accordance with ASTM B 117, including the scribe requirement in the test. Immediately upon removal of the panel from the test, the coating shall receive a rating of 10, no blistering, as determined by ASTM D 714; and a rating of 8, 1/32 inch failure at scribe, as determined by ASTM D 1654.

2.6.2 Formability Test

When subjected to testing in accordance with ASTM D 522 Method B, 1/8 inch diameter mandrel, the coating film shall show no evidence of cracking to the naked eye.

2.6.3 Accelerated Weathering, Chalking Resistance and Color Change

A sample of the sheets shall be tested in accordance with ASTM D 4587, test condition B or (as appropriate) D for 1000 total hours. The coating shall withstand the weathering test without cracking, peeling, blistering, loss of adhesion of the protective coating, or corrosion of the base metal. Protective coating that can be readily removed from the base metal with tape in accordance with ASTM D 3359, Test Method B, shall be considered as an area indicating loss of adhesion. Following the accelerated weathering test, the coating shall have a chalk rating not less than No. 8 in accordance with ASTM D 4214 test procedures, and the color change shall not exceed 5 CIE or Hunter Lab color difference (delta E) units in accordance with ASTM D 2244. For sheets required to have a low gloss finish, the chalk rating shall be not less than No. 6 and the color difference shall be not greater than 7 units.

2.6.4 Humidity Test

When subjected to a humidity cabinet test in accordance with ASTM D 2247 for 1000 hours, a scored panel shall show no signs of blistering, cracking, creepage or corrosion.

2.6.5 Impact Resistance

Factory-painted sheet shall withstand direct and reverse impact in accordance with ASTM D 2794 0.500 inch diameter hemispherical head indenter, equal to 1.5 times the metal thickness in mils, expressed in inch-pounds, with no loss of adhesion.

2.6.6 Abrasion Resistance Test

When subjected to the falling sand test in accordance with ASTM D 968, Method A, the coating system shall withstand a minimum of 80 liters of sand before the appearance of the base metal. The term "appearance of base metal" refers to the metallic coating on steel or the aluminum base metal.

2.6.7 Pollution Resistance

Coating shall show no visual effects when covered spot tested in a 10 percent hydrochloric acid solution for 24 hours in accordance with ASTM D 1308.

2.7 INSULATION

Thermal resistance of insulation shall be not less than 10. R-values shall be determined at a mean temperature of 75 degrees F in accordance with ASTM C 518. Insulation shall be a standard product with the insulation manufacturer, factory marked or identified with insulation manufacturer's name or trademark and R-value. Identification shall be on individual pieces or individual packages. Blanket insulation shall have a facing as specified in paragraph VAPOR RETARDER. Insulation, including facings, shall have a flame spread not in excess of 25 and a smoke developed rating not in excess of 50 when tested in accordance with ASTM E 84. The stated R-value of the insulation shall be certified by an independent Registered Professional Engineer if tests are conducted in the insulation manufacturer's laboratory. Insulation shall be blanket type conforming to ASTM C 991.

2.8 INSULATION RETAINERS

Insulation retainers shall be type, size, and design necessary to adequately hold the insulation and to provide a neat appearance. Metallic retaining members shall be nonferrous or have a nonferrous coating. Nonmetallic retaining members, including adhesives used in conjunction with mechanical retainers or at insulation seams, shall have a fire resistance classification not less than that permitted for the insulation.

2.9 SEALANT

Sealants shall be elastomeric type containing no oil or asphalt. Exposed sealant shall be colored to match the applicable building color and shall cure to a rubberlike consistency. Sealant placed in the roof panel standing seam ribs shall be provided in accordance with the manufacturer's recommendations.

2.10 GASKETS AND INSULATING COMPOUNDS

Gaskets and insulating compounds shall be nonabsorptive and suitable for insulating contact points of incompatible materials. Insulating compounds shall be nonrunning after drying.

2.11 VAPOR RETARDER

2.11.1 Vapor Retarders

Insulation facing shall have a permeability of 0.1 perm or less when tested in accordance with ASTM E 96. Facing shall be white of reinforced foil with a vinyl finish or sheet vinyl. Facings and finishes shall be factory applied.

2.12 EPDM RUBBER BOOTS

Flashing devices around pipe penetrations shall be flexible, one-piece devices molded from weather-resistant EPDM rubber. Rubber boot material shall be as recommended by the manufacturer. The boots shall have base rings made of aluminum or corrosion resisting steel that conform to the contours of the roof panel to form a weather-tight seal.

PART 3 EXECUTION

3.1 MANUFACTURER'S REPRESENTATION

A representative of the roofing system shall be present at the site of the work during the installation of roofing panels. Representative shall inspect the installation to assure that the design requirements are met.

3.2 INSTALLATION

Installation shall be in accordance with the manufacturer's erection instructions and drawings. Dissimilar materials which are not compatible when contacting each other shall be insulated by means of gaskets or insulating compounds. Molded closure strips shall be installed wherever roofing sheets terminate in open-end configurations, exclusive of flashings. The closure strip installation shall be weather-tight and sealed. Screws shall be installed with a clutching screw gun, to assure screws are not stripped. Field test shall be conducted on each gun prior to starting installation and periodically thereafter to assure it is adjusted properly to install particular type and size of screw as recommended by manufacturer's literature. Improper or mislocated drill holes shall be plugged with an oversize screw fastener and gasketed washer; however, sheets with an excess of such holes or with such holes in critical locations shall not be used. Exposed surfaces and edges shall be kept clean and free from sealant, metal cuttings, hazardous burrs, and other foreign material. Stained, discolored, or damaged sheets shall be removed from the site.

3.2.1 Field Forming of Panels

When roofing panels are formed from factory-color-finished steel coils at the project site, the same care and quality control measures that are taken in shop forming of roofing panels shall be observed. Rollformer shall be operated by the metal roofing manufacturer's representative. In cold weather conditions, preheating of the steel coils to be field formed shall be performed as necessary just prior to the rolling operations.

3.2.2 Purlins

Unless otherwise shown, purlins shall be anchored to the primary structural framing members with bolts or screws. The purlin spacing shall be as indicated on the contract drawings.

3.2.3 Roof Panel Installation

Roof panels shall be installed with the standing seams in the direction of the roof slope. The side seam connections for installed panels shall be completed at the end of each day's work. Method of applying joint sealant shall conform to the manufacturer's recommendation to achieve a complete weather-tight installation. End laps of panels shall be provided in accordance with the

manufacturer's instructions. Closures, flashings, EPDM rubber boots, roof curbs, and related accessories shall be installed according to the manufacturer's drawings. Fasteners shall not puncture roofing sheets except as provided for in the manufacturer's instructions for erection and installation. Expansion joints for the standing seam roof system shall be installed at locations indicated on the contract drawings and other locations indicated on the manufacturer's drawings.

3.2.4 Concealed Anchor Clips

Concealed anchor clips shall be fastened directly to the structural framing members. Attachment to the substrate (when provided) or to the panels is not permitted. The maximum distance, parallel to the seams, between clips shall be 30 inches on center at the corner, edge, and ridge zones, and 5 feet maximum on centers for the remainder of the roof.

3.3 INSULATION INSTALLATION

Insulation shall be installed continuous over entire roof surface over the Apparatus Bay. Where expansion joints, terminations, and other connections are made, the cavity shall be filled with batt insulation with vapor retarder providing equivalent R-value and perm rating as remaining insulation. Insulation shall be installed as indicated and in accordance with manufacturer's instructions.

Blanket insulation shall be installed between and parallel to the purlins with tabs of a facer lapping on the top face of the purlins. Thermal blocks shall be provided over purlins, between clips. A second layer of unfaced insulation shall be added between purlins to provide full R-value. Blanket insulation shall be supported by an integral facing or other commercially available support system.

3.4 VAPOR RETARDER INSTALLATION

Integral facing on blanket insulation shall have the facing lapped and sealed with a compatible tape to provide a vapor tight membrane. Insulation shall be installed with the face side toward the building interior.

3.5 CLEANING AND TOUCH-UP

Exposed SSSMR systems shall be cleaned at completion of installation. Debris that could cause discoloration and harm to the panels, flashings, closures and other accessories shall be removed. Grease and oil films, excess sealants, and handling marks shall be removed and the work shall be scrubbed clean. Exposed metal surfaces shall be free of dents, creases, waves, scratch marks, and solder or weld marks. Immediately upon detection, abraded or corroded spots on shop-painted surfaces shall be wire brushed and touched up with the same material used for the shop coat. Factory color finished surfaces shall be touched up with the manufacturer's recommended touch up paint.

CONTRACTOR'S FIVE (5) YEAR NO PENAL SUM WARRANTY
FOR
STRUCTURAL STANDING SEAM METAL ROOF (SSSMR) SYSTEM

PROJECT DESCRIPTION AND LOCATION (Include Bldg. No.):_____
CORPS OF ENGINEERS CONTRACT NUMBER:_____
SPECIFICATION SECTION NUMBER & DESCRIPTION:
07416 STRUCTURAL STANDING SEAM METAL ROOF (SSSMR) SYSTEM

CONTRACTOR:_____
ADDRESS:_____
POINT OF CONTACT:_____
TELEPHONE NUMBER:_____

OWNER:_____
ADDRESS:_____
POINT OF CONTACT:_____
TELEPHONE NUMBER:_____

CONSTRUCTION AGENT:_____
ADDRESS:_____
POINT OF CONTACT:_____
TELEPHONE NUMBER:_____

THE SSSMR SYSTEM INSTALLED ON THE ABOVE NAMED BUILDING IS WARRANTED BY _____ _____ FOR A PERIOD OF FIVE (5) YEARS AGAINST WORKMANSHIP AND MATERIAL DEFICIENCIES, WIND DAMAGE, STRUCTURAL FAILURE AND LEAKAGE. THE SSSMR SYSTEM COVERED UNDER THIS WARRANTY SHALL INCLUDE THE ENTIRE ROOFING SYSTEM, INCLUDING THE STANDING SEAM METAL ROOF PANELS, PANEL FINISHES, ROOFING SECUREMENT COMPONENTS, ALL ACCESSORIES, COMPONENTS, AND TRIM; INCLUDING PENETRATIONS SUCH VENTS, CURBS, SKYLIGHTS; INTERIOR OR EXTERIOR GUTTERS AND DOWNSPOUTS; EAVES, RIDGE, HIP, VALLEY, RAKE, GABLE, WALL, OR OTHER ROOF SYSTEM FLASHINGS INSTALLED TO PROVIDE A WEATHERTIGHT ROOF SYSTEM; AND ITEMS SPECIFIED IN OTHER SECTIONS OF THE SPECIFICATIONS THAT ARE PART OF THE SSSMR SYSTEM. ALL LEAKS SHALL BE REPAIRED AS APPROVED BY THE CONTRACTING OFFICER. THIS WARRANTY SHALL COVER THE ENTIRE COST OF REPAIR OR REPLACEMENT, INCLUDING ALL MATERIAL, LABOR, AND RELATED MARKUPS. THE ABOVE REFERENCED WARRANTY COMMENCED ON THE DATE OF FINAL ACCEPTANCE ON _____ AND WILL REMAIN IN EFFECT FOR STATED DURATION FROM THIS DATE.

SIGNED, DATED, AND NOTARIZED (BY COMPANY PRESIDENT)

_____
(Company President) (Date)

(SEE REVERSE SIDE FOR SUPPLEMENTAL PROVISIONS AND EXCLUSIONS)

CONTRACTOR'S FIVE (5) YEAR NO PENAL SUM WARRANTY
FOR
STRUCTURAL STANDING SEAM METAL ROOF (SSSMR) SYSTEM
(continued)

THE CONTRACTOR MAY SUPPLEMENT THIS WARRANTY WITH WRITTEN WARRANTIES FROM THE INSTALLER AND/OR MANUFACTURER OF THE SSSMR SYSTEM, WHICH SHALL BE SUBMITTED ALONG WITH THE CONTRACTOR'S WARRANTY. HOWEVER, THE CONTRACTOR WILL BE ULTIMATELY RESPONSIBLE FOR THE WARRANTY AS OUTLINED IN THE SPECIFICATIONS AND AS INDICATED IN THIS WARRANTY EXAMPLE.

EXCLUSIONS FROM COVERAGE

1. NATURAL DISASTERS, ACTS OF GOD (LIGHTING, FIRE, EXPLOSIONS, SUSTAINED WIND FORCES IN EXCESS OF THE DESIGN CRITERIA, EARTHQUAKES, AND HAIL).

2. ACTS OF NEGLIGENCE OR ABUSE OR MISUSE BY GOVERNMENT OR OTHER PERSONNEL, INCLUDING ACCIDENTS, VANDALISM, CIVIL DISOBEDIENCE, WAR, OR DAMAGE CAUSED BY FALLING OBJECTS.

3. DAMAGE BY STRUCTURAL FAILURE, SETTLEMENT, MOVEMENT, DISTORTION, WARPAGE, OR DISPLACEMENT OF THE BUILDING STRUCTURE OR ALTERATIONS MADE TO THE BUILDING.

4. CORROSION CAUSED BY EXPOSURE TO CORROSIVE CHEMICALS, ASH OR FUMES GENERATED OR RELEASED INSIDE OR OUTSIDE THE BUILDING FROM CHEMICAL PLANTS, FOUNDRIES, PLATING WORKS, KILNS, FERTILIZER FACTORIES, PAPER PLANTS, AND THE LIKE.

5. FAILURE OF ANY PART OF THE SSSMR SYSTEM DUE TO ACTIONS BY THE OWNER TO INHIBIT FREE DRAINAGE FROM THE ROOF AND ALLOW PONDING WATER. CONTRACTOR'S DESIGN SHALL INSURE FREE DRAINAGE FROM THE ROOF AND NOT ALLOW PONDING WATER.

6. THIS WARRANTY APPLIES TO THE STRUCTURAL STANDING SEAM METAL ROOF (SSSMR) SYSTEM. IT DOES NOT INCLUDE ANY CONSEQUENTIAL DAMAGE TO THE BUILDING INTERIOR OR CONTENTS WHICH IS COVERED BY THE WARRANTY OF CONSTRUCTION CLAUSE INCLUDED IN THIS CONTRACT.

7. THIS WARRANTY CANNOT BE TRANSFERRED TO ANOTHER OWNER WITHOUT WRITTEN CONSENT OF THE CONTRACTOR AND THIS WARRANTY AND THE CONTRACT PROVISIONS WILL TAKE PRECEDENCE OVER ANY CONFLICTS WITH STATE STATUTES, UNLESS OTHERWISE APPROVED IN WRITING BY THE CONTRACTING OFFICER.

LEAKS SHALL BE RESPONDED TO WITHIN 48 HOURS OF RECEIPT OF NOTICE BY TELEPHONE OR IN WRITING FROM EITHER THE OWNER, OR CONTRACTING OFFICER. EMERGENCY REPAIRS, TO PREVENT FURTHER ROOF LEAKS, SHALL BE INITIATED IMMEDIATELY; A WRITTEN PLAN SHALL BE SUBMITTED FOR APPROVAL TO REPAIR OR REPLACE THIS SSSMR SYSTEM WITHIN SEVEN CALENDAR DAYS. ACTUAL WORK FOR PERMANENT REPAIRS OR REPLACEMENT SHALL BE STARTED WITHIN 30 DAYS AFTER RECEIPT OF NOTICE, AND COMPLETED WITHIN A REASONABLE TIME FRAME. IF THE CONTRACTOR FAILS TO ADEQUATELY RESPOND TO THE WARRANTY PROVISIONS, AS STATED IN THE CONTRACT AND AS CONTAINED HEREIN, THE CONTRACTING OFFICER MAY HAVE THE SSSMR SYSTEM REPAIRED OR REPAIRED BY OTHERS AND CHARGE THE COST TO THE CONTRACTOR.

A FRAMED COPY OF THIS WARRANTY SHALL BE POSTED IN THE MECHANICAL ROOM OR OTHER APPROVED LOCATION DURING THE ENTIRE WARRANTY PERIOD.

-- End of Section --

SECTION 07600

SHEET METALWORK, GENERAL

PART 1 GENERAL

1.1 REFERENCES

The publications listed below form a part of this specification to the extent referenced. The publications are referred to in the text by basic designation only.

AMERICAN SOCIETY FOR TESTING AND MATERIALS (ASTM)

ASTM A 167	(1996) Stainless and Heat-Resisting Chromium-Nickel Steel Plate, Sheet, and Strip
ASTM D 543	(1987) Resistance of Plastics to Chemical Reagents
ASTM D 822	(1995) Conducting Tests on Paint and Related Coatings and Materials Using Filtered Open-Flame Carbon-Arc Light and Water Exposure Apparatus
ASTM D 828	(1993) Tensile Breaking Strength of Paper and Paperboard
ASTM E 96	(1995) Water Vapor Transmission of Materials

INSECT SCREENING WEAVERS ASSOCIATION (ISWA)

ISWA IWS 089	(1990) Recommended Standards and Specifications for Insect Wire Screening (Wire Fabric)

SHEET METAL AND AIR CONDITIONING CONTRACTORS NATIONAL ASSOCIATION (SMACNA)

SMACNA-02	(1993) Architectural Sheet Metal Manual

1.2 GENERAL REQUIREMENTS

Sheet metalwork shall be accomplished to form weathertight construction without waves, warps, buckles, fastening stresses or distortion, and shall allow for expansion and contraction.

1.2.1 Coordination

Cutting, fitting, drilling, and other operations in connection with sheet metal required to accommodate the work of other trades shall be performed by sheet metal mechanics. Installation of sheet metal items used in conjunction with roofing shall be coordinated with roofing work to permit continuous roofing operations. Sheet metalwork pertaining to heating, ventilating, and air conditioning is specified in Division 15.

1.3 SUBMITTALS

Government approval is required for submittals with a "GA" designation; submittals having an "FIO" designation are for information only. The following shall be submitted in accordance with Section 01330 SUBMITTAL PROCEDURES:

SD-04 Drawings

Materials; GA.

Drawings of sheet metal items showing weights, gauges or thicknesses; types of materials; expansion-joint spacing; fabrication details; and installation procedures.

1.4 DELIVERY, STORAGE, AND HANDLING

Materials shall be adequately packaged and protected during shipment and shall be inspected for damage, dampness, and wet-storage stains upon delivery to the jobsite. Materials shall be clearly labeled as to type and manufacturer. Sheet metal items shall be carefully handled to avoid damage. Materials shall be stored in dry, ventilated areas until immediately before installation.

PART 2 PRODUCTS

2.1 MATERIALS

2.1.1 Accessories

Accessories and other items essential to complete the sheet metal installation, though not specifically indicated or specified, shall be provided.

2.1.2 Sealant

Unless otherwise specified, sealant shall be an elastomeric weather resistant sealant as specified in Section 07900 JOINT SEALING.

2.1.3 Fasteners

Fasteners shall be compatible with the fastened material and shall be the type best suited for the application.

2.1.4 Exposed-to-View Sheet Metal

All sheet metal used to fabricate exposed-to-view items such as gutters, downspouts, fasciae and trim shall be fabricated from pre-finished sheet metal of the same kind and quality as the material specified for roofing in Section 07416 STRUCTURAL STANDING SEAM METAL ROOF (SSSMR) SYSTEM. Where possible the sheet metalwork shall be fabricated from the same coil-stock or production run as the roofing material. All sheet metalwork shall be 24 gauge unless noted otherwise on the drawings.

2.1.5 Concealed Sheet Metal

Sheet metal used to fabricated metalwork items which are concealed from view, except through-wall flashings, may be fabricated from the same material as the

exposed-to-view sheet metal; or stainless steel conforming to ASTM A 167, Type 302 or 304, fully annealed, dead soft temper.

2.1.6 Through-Wall Flashing

a. Electro-sheet copper not less than 5 ounces, factory coated both sides with acid- and alkali-resistant bituminous compound not less than 6 ounces per square foot or factory covered both sides with asphalt-saturated cotton fabric, asphalt saturated glass-fiber fabric, or with 40 pound reinforced kraft paper bonded with asphalt.

b. Nonreinforced, waterproof, impermeable extruded elastomeric single ply sheeting not less than 30 mils thick.

c. Other through-wall flashing material may be used provided the following performance criteria are met.

(1) No cracking or flaking when bent 180 degrees over a 1/32 inch mandrel and rebent at the same point over the same mandrel in an opposite direction at 32 degrees F.

(2) Water vapor permeability not more than 2 perms when tested in accordance with ASTM E 96.

(3) Minimum breaking strength of 90 pounds per inch width in the weakest direction when tested in accordance with ASTM D 828.

(4) No visible deterioration after being subjected to a 400-hour direct weathering test in accordance with ASTM D 822.

(5) No shrinkage in length or width and less than 5 percent loss of breaking strength after a 10-day immersion, per ASTM D 543, in 5 percent (by weight) solutions, respectively, of sulfuric acid, hydrochloric acid, sodium hydroxide or saturated lime (calcium hydroxide).

2.1.7 Louver Screen

Type I commercial bronze insect screening conforming to ISWA IWS 089.

PART 3 EXECUTION

3.1 GENERAL

Items such as gutters, downspouts and louvers shall be fabricated in conformance with SMACNA-02 and as indicated. Unless otherwise specified or indicated, exposed edges shall be folded back to form a 1/2 inch hem on the concealed side, and bottom edges of exposed vertical surfaces shall be angled to form drips.

3.2 EXPANSION JOINTS

Expansion joints shall be provided as indicated. Where not indicated joints shall be provided as specified in SMACNA-02. Expansion joints in continuous sheet metal shall be provided at 40 foot intervals. Joints shall be evenly spaced. An additional joint shall be provided where the distance between the

last expansion joint and the end of the continuous run is more than half the required interval spacing.

3.3 CONNECTIONS AND JOINTING

3.3.1 Seaming

Flat-lock seams shall finish not less than 1 inch wide. Plain-lap seams shall lap not less than 3 inches unless otherwise specified. Flat seams shall be made in the direction of the flow.

3.4 CLEATS

A continuous cleat shall be provided where indicated or specified to secure loose edges of the sheet metalwork. Butt joints of cleats shall be spaced approximately 1/8 inch apart. The cleat shall be fastened to supporting wood construction with nails evenly spaced not over 12 inches on centers. Where the fastening is to be made to concrete or masonry, screws shall be used and shall be driven in expansion shields set in concrete or masonry.

3.5 GUTTERS AND DOWNSPOUTS

Gutters and downspouts shall be installed as indicated. Gutters shall be supported as indicated. Downspouts shall be rigidly attached to the building.

3.6 FLASHINGS

Flashings shall be installed at locations indicated and as specified below. Sealing shall be according to the flashing manufacturer's recommendations. Flashing shall be formed to direct water to the outside of the system. Flashings for roof penetrations are specified in Section 07416 STRUCTURAL STANDING SEAM METAL ROOF (SSSMR) SYSTEM.

3.6.1 Through-Wall Flashing

Through-wall flashing shall be laid with a layer of mortar above and below the flashing so that the total thickness of the two layers of the mortar and flashing are the same thickness as the regular mortar joints. Flashing shall not extend further into the masonry backup wall than the first mortar joint. Joints in flashing shall be lapped and sealed. Flashing shall be one piece for lintels and sills.

3.7 FASCIA

Fascia shall be fabricated and installed as indicated and in accordance with SMACNA-02.

3.8 INSTALLATION OF LOUVERS

Louvers shall be rigidly attached to the supporting construction. The installation shall be rain-tight. Louver screen shall be installed as indicated.

3.9 CONTRACTOR QUALITY CONTROL

The Contractor shall establish and maintain a quality control procedure for sheet metal used in conjunction with roofing to assure compliance of the

installed sheet metalwork with the contract requirements. Any work found not to be in compliance with the contract shall be promptly removed and replaced or corrected in an approved manner. Quality control shall include, but not be limited to, the following:

a. Observation of environmental conditions; number and skill level of sheet metal workers; condition of substrate.

b. Verification of compliance of materials before, during, and after installation.

c. Inspection of sheet metalwork for proper size and thickness, fastening and joining, and proper installation.

The actual quality control observations and inspections shall be documented and a copy of the documentation furnished to the Contracting Officer at the end of each day.

-- End of Section --

SECTION 07900

JOINT SEALING

PART 1 GENERAL

1.1 REFERENCES

The publications listed below form a part of this specification to the extent referenced. The publications are referred to in the text by basic designation only.

AMERICAN SOCIETY FOR TESTING AND MATERIALS (ASTM)

ASTM C 509	(1994) Elastomeric Cellular Preformed Gasket and Sealing Material
ASTM C 570	(1995) Oil- and Resin-Base Caulking Compound for Building Construction
ASTM C 734	(1993) Low-Temperature Flexibility of Latex Sealants After Artificial Weathering
ASTM C 834	(1995) Latex Sealants
ASTM C 920	(1994) Elastomeric Joint Sealants
ASTM C 1085	(1991) Butyl Rubber-Based Solvent-Release Sealants
ASTM D 217	(1994) Cone Penetration of Lubricating Grease
ASTM D 1056	(1991) Flexible Cellular Materials - Sponge or Expanded Rubber
ASTM E 84	(1996a) Surface Burning Characteristics of Building Materials

1.2 SUBMITTALS

Government approval is required for submittals with a "GA" designation; submittals having an "FIO" designation are for information only. The following shall be submitted in accordance with Section 01330 SUBMITTAL PROCEDURES:

SD-01 Data

Backing; FIO. Bond-Breaker; FIO. Sealant; FIO.

Manufacturer's descriptive data including storage requirements, shelf life, curing time, instructions for mixing and application, and primer data (if required). A copy of the Material Safety Data Sheet shall be provided for each solvent, primer or sealant material.

SD-13 Certificates

Sealant; FIO.

Certificates of compliance stating that the materials conform to the specified requirements.

1.3 ENVIRONMENTAL REQUIREMENTS

The ambient temperature shall be within the limits of 40 to 90 degrees F when the sealants are applied.

1.4 DELIVERY AND STORAGE

Materials shall be delivered to the job in the manufacturer's original unopened containers. The container label or accompanying data sheet shall include the following information as applicable: manufacturer, name of material, formula or specification number, lot number, color, date of manufacture, mixing instructions, shelf life, and curing time at the standard conditions for laboratory tests. Materials shall be handled and stored to prevent inclusion of foreign materials. Materials shall be stored at temperatures between 40 and 90 degrees F unless otherwise specified by the manufacturer.

PART 2 PRODUCTS

2.1 BACKING

Backing shall be 25 to 33 percent oversize for closed cell and 40 to 50 percent oversize for open cell material.

2.1.1 Rubber

Cellular rubber sponge backing shall be ASTM D 1056, Type 2, closed cell, Class A, round cross section.

2.1.2 Synthetic Rubber

Synthetic rubber backing shall be ASTM C 509, Option I, Type I preformed rods or tubes.

2.1.3 Neoprene

Neoprene backing shall be ASTM D 1056, closed cell expanded neoprene cord Type 2, Class C.

2.2 BOND-BREAKER

Bond-breaker shall be as recommended by the sealant manufacturer to prevent adhesion of the sealant to backing or to bottom of the joint.

2.3 PRIMER

Primer shall be non-staining type as recommended by sealant manufacturer for the application.

2.4 CAULKING

Oil- and resin-based caulking conforming to ASTM C 570 or latex sealant conforming to ASTM C 834.

2.4.1 ELASTOMERIC SEALANT

Elastomeric sealants shall be polyurethane sealant conforming to ASTM C 920 and the following:

a. Vertical Joints: Grade NS, Class 25, Use G.
b. Joints in Horizontal Planes: Grade NS, Class 12.5, Use T.

2.4.2 ACOUSTICAL SEALANT

Acoustical sealant shall be rubber or polymer-based acoustical sealant having a flame spread of 25 or less and a smoke developed rating of 50 or less when tested in accordance with ASTM E 84. Acoustical sealant shall have a consistency of 250 to 310 when tested in accordance with ASTM D 217, and shall remain flexible and adhesive after 500 hours of accelerated weathering as specified in ASTM C 734, and shall be non-staining.

2.4.3 BUTYL SEALANT

Butyl sealant shall be ASTM C 1085.

2.4.4 PREFORMED TAPE SEALANT

Preformed tape sealant shall be polybutylene or isoprene-butylene based pressure sensitive weather resistant tape sealant capable of sealing out moisture, air and dust when installed as recommended by the manufacturer. At temperatures from minus 30 to plus 160 degrees F, the sealant shall be non-bleeding and shall have no loss of adhesion. Cross-section dimensions shall be not less than 1/8 inch by 1 inch.

2.5 SOLVENTS AND CLEANING AGENTS

Solvents, cleaning agents, and accessory materials shall be provided as recommended by the manufacturer.

PART 3 EXECUTION

3.1 GENERAL

3.1.1 Surface Preparation

The surfaces of joints to receive sealant or caulk shall be free of all frost, condensation and moisture. Oil, grease, dirt, chalk, particles of mortar, dust, loose rust, loose mill scale, and other foreign substances shall be removed from surfaces of joints to be in contact with the sealant. Oil and grease shall be removed with solvent and surfaces shall be wiped dry with clean cloths. For surface types not listed below, the sealant manufacturer shall be contacted for specific recommendations.

3.1.2 Concrete and Masonry Surfaces

Where surfaces have been treated with curing compounds, oil, or other such materials, the materials shall be removed by sandblasting or wire brushing. Laitance, efflorescence and loose mortar shall be removed from the joint cavity.

3.1.3 Steel Surfaces

Steel surfaces to be in contact with sealant shall be scraped and wire brushed to remove loose mill scale. Protective coatings on steel surfaces shall be removed by a solvent that leaves no residue.

3.1.4 Aluminum Surfaces

Aluminum surfaces to be in contact with sealants shall be cleaned of temporary protective coatings. When masking tape is used for a protective cover, the tape and any residual adhesive shall be removed just prior to applying the sealant. Solvents used to remove protective coating shall be as recommended by the manufacturer of the aluminum work and shall be non-staining.

3.1.5 Wood Surfaces

Wood surfaces to be in contact with sealants shall be free of splinters and sawdust or other loose particles.

3.2 APPLICATION

3.2.1 Masking Tape

Masking tape may be placed on the finish surface on one or both sides of a joint cavity to protect adjacent finish surfaces from primer or sealant smears. Masking tape shall be removed within 10 minutes after joint has been filled and tooled.

3.2.2 Backing

Backing shall be installed to provide the indicated sealant depth. The installation tool shall be shaped to avoid puncturing the backing.

3.2.3 Bond-Breaker

Bond-breaker shall be applied to fully cover the bottom of the joint without contaminating the sides where sealant adhesion is required.

3.2.4 Primer

Primer shall be used on concrete masonry units, wood, or other porous surfaces in accordance with instructions furnished with the sealant. Primer shall be applied to the joint surfaces to be sealed. Surfaces adjacent to joints shall not be primed.

3.2.5 Sealant

Sealant shall be used before expiration of shelf life. Multi-component sealants shall be mixed according to manufacturer's printed instructions. Sealant in guns shall be applied with a nozzle of proper size to fit the width

of joint. Joints shall be sealed as detailed in the drawings. Sealant shall be forced into joints with sufficient pressure to expel air and fill the groove solidly. Sealant shall be installed to the indicated depth without displacing the backing. Unless otherwise indicated, specified, or recommended by the manufacturer, the installed sealant shall be dry tooled to produce a uniformly smooth surface free of wrinkles and to ensure full adhesion to the sides of the joint; the use of solvents, soapy water, etc., will not be allowed. Sealants shall be installed free of air pockets, foreign embedded matter, ridges and sags. Sealer shall be applied over the sealant when and as specified by the sealant manufacturer.

3.3 CLEANING

The surfaces adjoining the sealed joints shall be cleaned of smears and other soiling resulting from the sealant application as work progresses.

-- End of Section --

SECTION 08110

STEEL DOORS AND FRAMES

PART 1 GENERAL

1.1 REFERENCES

The publications listed below form a part of this specification to the extent referenced. The publications are referred to in the text by basic designation only.

AMERICAN SOCIETY FOR TESTING AND MATERIALS (ASTM)

ASTM C 236	(1989; R 1993) Steady-State Thermal Performance of Building Assemblies by Means of a Guarded Hot Box
ASTM C 976	(1990) Thermal Performance of Building Assemblies by Means of a Calibrated Hot Box
ASTM D 2863	(1991) Measuring the Minimum Oxygen Concentration to Support Candle-Like Combustion of Plastics (Oxygen Index)

DOOR AND HARDWARE INSTITUTE (DHI)

DHI A115.1G	(1994) Installation Guide for Doors and Hardware

NATIONAL FIRE PROTECTION ASSOCIATION (NFPA)

NFPA 80	(1995) Fire Doors and Windows
NFPA 80A	(1993) Protection of Buildings from Exterior Fire Exposures
NFPA 101	(1997) Safety to Life from Fire in Buildings and Structures
NFPA 252	(1995) Fire Tests of Door Assemblies

STEEL DOOR INSTITUTE (SDOI)

SDOI SDI-100	(1991) Standard Steel Doors and Frames
SDOI SDI-106	(1996) Standard Door Type Nomenclature
SDOI SDI-107	(1984) Hardware on Steel Doors (Reinforcement - Application)

1.2 SUBMITTALS

Government approval is required for submittals with a "GA" designation; submittals having an "FIO" designation are for information only. The following shall be submitted in accordance with Section 01330 SUBMITTAL PROCEDURES:

SD-04 Drawings

Steel Doors and Frames; FIO.

Drawings using standard door type nomenclature in accordance with SDOI SDI-106 indicating the location of each door and frame, elevation of each model of door and frame, details of construction, method of assembling sections, location and extent of hardware reinforcement, hardware locations, type and location of anchors for frames, and thicknesses of metal. Drawings shall include catalog cuts or descriptive data for the doors, frames, and weatherstripping including air infiltration data and manufacturers printed instructions.

SD-09 Reports

Fire Rated Doors; FIO.

A letter by a nationally recognized testing laboratory which identifies the product manufacturer, type, and model; certifying that the laboratory has tested a sample assembly in accordance with NFPA 252 and issued a current listing for same.

SD-13 Certificates

Fire Rated Doors; FIO. Thermal Insulated Doors; FIO.

a. Certification of Oversized Fire Doors: Certificates of compliance in accordance with the requirements of NFPA 252 for fire doors exceeding the sizes for which label service is available.

b. Certification of Thermal Insulating Rating: Certification or test report for thermal insulated doors shall show compliance with the specified requirements. The certification, or test report, shall list the parameters and the type of hardware and perimeter seals used to achieve the rating.

1.3 DELIVERY AND STORAGE

During shipment, welded unit type frames shall be strapped together in pairs with heads at opposite ends or shall be provided with temporary steel spreaders at the bottom of each frame; and knockdown type frames shall be securely strapped in bundles. Materials shall be delivered to the site in undamaged condition, and stored out of contact with the ground and under a weathertight covering permitting air circulation. Doors and assembled frames shall be stored in an upright position in accordance with DHI A115.1G. Abraded, scarred, or rusty areas shall be cleaned and touched up with matching finishes.

1.4 WARRANTY

Manufacturer's standard performance guarantees or warranties that extend beyond a 1 year period shall be provided.

PART 2 PRODUCTS

2.1 DOORS AND FRAMES

Doors and frames shall be factory fabricated in accordance with SDOI SDI-100 and the additional requirements specified herein. Door grade shall be heavy duty (Grade II) unless otherwise indicated on the door and door frame schedules. Doors and frames shall be prepared to receive hardware conforming to the templates and information provided under Section 08700 BUILDERS' HARDWARE. Doors and frames shall be reinforced, drilled, and tapped to receive mortised hinges, locks, latches, and flush bolts as required. Doors and frames shall be reinforced for surface applied hardware. Frames shall be welded type located. Door frames shall be furnished with a minimum of three jamb anchors and one floor anchor per jamb. Anchors shall be not less than 18 gauge steel or 7 gauge diameter wire. For wall conditions that do not allow the use of a floor anchor, an additional jamb anchor shall be provided. Rubber silencers shall be furnished for installation into factory predrilled holes in door frames; adhesively applied silencers are not acceptable. Where frames are installed in masonry walls, plaster guards shall be provided on door frames at hinges and strikes. Reinforcing of door assemblies for closers and other required hardware shall be in accordance with SDOI SDI-100 and the conditions of the fire door assembly listing when applicable. Exterior doors shall have top edges closed flush and sealed against water penetration.

2.2 FIRE RATED DOORS

Fire rated door assemblies shall bear the listing identification label of a nationally recognized testing laboratory qualified to perform tests of fire door assemblies in accordance with NFPA 252 and having a listing for the tested assemblies. The fire resistance rating shall be as shown. Doors exceeding the sizes for which listing label service is offered shall be in accordance with NFPA 252. Listing identification labels shall be constructed and permanently applied by a method which results in their destruction should they be removed.

2.3 THERMAL INSULATED DOORS

The interior of thermal insulated doors shall be completely filled with rigid plastic foam permanently bonded to each face panel. The thermal conductance (U-value) through the door shall not exceed 0.41 btu/hr when tested as an operational assembly in accordance with ASTM C 236 or ASTM C 976. Doors with cellular plastic cores shall have a minimum oxygen index rating of 22 percent when tested in accordance with ASTM D 2863.

2.4 LOUVERS

Louvers shall be provided in sidelite frames where indicated. Louvers shall be constructed as indicated and shall provide a rainproof opening. Insect screens as specified in Section 07600 SHEET METALWORK; GENERAL shall be provided on the interior side. Blank off panels, consisting of 16 gauge sheet metal shall also be provided where indicated by the mechanical drawings.

2.5 GLAZING

Glazing shall be as specified in Section 08810 GLASS AND GLAZING. Removable glazing beads shall be screw-on type.

PART 3 EXECUTION

3.1 INSTALLATION

Installation shall be in accordance with DHI A115.1G. Preparation for surface applied hardware shall be in accordance with SDOI SDI-107. Rubber silencers shall be installed in door frames after finish painting has been completed; adhesively applied silencers are not acceptable. Weatherstripping shall be installed at exterior door openings to provide a weathertight installation. Installation and operational characteristics of fire doors shall be in accordance with NFPA 80, NFPA 80A and NFPA 101. Hollow metal door frames shall be solid grouted in masonry walls.

3.1.1 Thermal Insulated Doors

Hardware and perimeter seals shall be adjusted for proper operation. Doors shall be sealed weathertight after installation of hardware and shall be in accordance with Section 07900 JOINT SEALING.

-- End of Section --

SECTION 08210

WOOD DOORS

PART 1 GENERAL

1.1 REFERENCES

The publications listed below form a part of this specification to the extent referenced. The publications are referred to in the text by basic designation only.

ARCHITECTURAL WOODWORK INSTITUTE (AWI)

AWI-02	(1994) Architectural Woodwork Quality Standards, Guide Specifications and Quality Certification Program

NATIONAL FIRE PROTECTION ASSOCIATION (NFPA)

NFPA 80	(1995) Fire Doors and Windows
NFPA 101	(1997) Safety to Life from Fire in Buildings and Structures
NFPA 252	(1995) Fire Tests of Door Assemblies

NATIONAL WOOD WINDOW & DOOR ASSOCIATION (NWWDA)

NWWDA I.S. 1-A	(1993) Architectural Wood Flush Doors

1.2 GENERAL REQUIREMENTS

1.2.1 Standard Products

Doors shall be of the type, size, and design indicated on the drawings, and shall be the standard products of manufacturers regularly engaged in the manufacture of wood doors.

1.2.2 Marking

Each door shall bear a stamp, brand, or other identifying mark indicating quality and construction of the door. The identifying mark or a separate certification shall include identification of the standard on which construction of the door is based, identity of the manufacturing plant, identification of the standard under which preservative treatment, if used, was made, and identification of the doors having a Type I glue bond.

1.3 SUBMITTALS

Government approval is required for submittals with a "GA" designation; submittals having an "FIO" designation are for information only. The following shall be submitted in accordance with Section 01330 SUBMITTAL PROCEDURES:

SD-04 Drawings

Wood Doors and Frames; FIO.

Drawings indicating the location of each door, elevation of each type of door, details of construction, marks to be used to identify the doors, and location and extent of hardware blocking. Drawings shall include catalog cuts or descriptive data for doors, weatherstripping, flashing, and thresholds to be used.

SD-06 Instructions

Fire Doors; FIO.

Manufacturers preprinted installation and touch-up instructions.

SD-13 Certificates

Adhesives; FIO.

Certificate stating that adhesives used for proposed doors do not contain any formaldehyde.

1.4 STORAGE

Doors shall be stored in fully covered areas and protected from damage and from extremes in temperature and humidity. Doors shall be stored on supports to prevent warping or twisting, and to provide ventilation. Factory cartons or wrappers shall be kept intact until installation.

1.5 HARDWARE

Hardware is specified in Section 08700 BUILDERS' HARDWARE.

1.6 GLAZING

Glazing is specified in Section 08810 GLASS AND GLAZING.

1.7 WARRANTY

Manufacturer's standard performance guarantees or warranties that extend beyond a 1 year period shall be provided.

PART 2 PRODUCTS

2.1 GENERAL FABRICATION REQUIREMENTS

2.1.1 Edge Sealing

Wood end-grain exposed at edges of doors shall be sealed prior to shipment.

2.1.2 Adhesives

Adhesives shall be in accordance with NWWDA I.S. 1-A, requirements for Type II Bond Doors (water-repellent). Adhesive for doors to receive a transparent finish shall be nonstaining. Adhesives shall contain no formaldehydes.

2.1.3 Prefitting

Doors shall be furnished prefitted or unfitted at the option of the Contractor.

2.2 FLUSH DOORS

Flush doors shall be solid core and shall conform to NWWDA I.S. 1-A, except for the one year acclimatization requirement in paragraph T-2, which shall not apply. Wood doors shall be 5-ply or 7-ply construction with faces, stiles, and rails bonded to the cores.

2.2.1 Core Construction

2.2.1.1 Solid Cores

Door construction shall be glued wood block core with vertical and horizontal edges bonded to the core. Where required by the indicated fire resistance rating cores may be mineral. Particle board cores will not be permitted. Blocking and hardware reinforcements for particle board and mineral core doors shall be in accordance with NWWDA I.S. 1-A.

2.2.2 Face Panels

2.2.2.1 Natural Finished Wood Veneer Doors

Veneer doors to receive natural finish shall be Custom Grade, plain sliced white oak veneer in accordance with NWWDA I.S. 1-A. Vertical stile strips shall be selected to provide edges of compatible species. Door finish shall be applied in the shop in accordance with paragraph FINISHING or field finished in accordance with paragraph FIELD FINISHING.

2.3 FIRE RATED DOORS

Fire rated door assemblies shall bear the listing identification label of a nationally recognized testing laboratory qualified to perform tests of fire door assemblies in accordance with NFPA 252 and having a listing for the tested assemblies. The specific time interval rating on the labels shall be as shown. Door assemblies shall be in accordance with NFPA 80. Listing identification on labels shall be constructed and permanently applied by a method which results in their destruction should they be removed.

2.3.1 Reinforcement Blocking

Fire rated doors shall be provided with hardware reinforcement blocking, and top, bottom, and intermediate rail blocking. Lock blocks shall be not less than 5 inches by 18 inches. Reinforcement blocking shall be in compliance with the manufacturer's labeling requirements. Reinforcement blocking shall not be of mineral material.

2.3.2 Stile Edges

Composite fire rated doors shall be provided with vertical stile edges that do not contain fire retardant salts.

2.4 FINISHING

2.4.1 Factory Coated Natural Finish

Doors indicated to receive factory coated natural finish shall be given a transparent finish conforming to AWI-02, Section 1500, Custom Grade, medium stain, medium rubbed sheen, close grain effect. Finish shall be AWI factory finish system Number TR3 or TR4. Color of the natural finish shall be in accordance with Section 09915 COLOR SCHEDULE. Edges of unfitted doors shall be field finished after fitting to the frames.

PART 3 EXECUTION

3.1 INSTALLATION OF DOORS

3.1.1 General Use Doors

Doors shall be fit, hung, and trimmed as required. Door shall have a clearance of 1/8 inch at the sides and top and shall have a bottom clearance of 1/4 inch over thresholds and 1/2 inch at other locations unless otherwise shown. The lock edge or both edges of doors shall be beveled at the rate of 1/8 inch in 2 inches. Cuts made on the job shall be sealed immediately after cutting, using a clear varnish or sealer. Bottom of doors shall be undercut to allow clear door swing over carpeted areas. Vertical edges of doors which have not been rounded or beveled at the factory shall be eased when the doors are installed.

3.1.2 Fire Doors

Installation, hardware, and operational characteristics shall conform to NFPA 80 and NFPA 101 and shall be in strict conformance with the manufacturer's printed instructions. Properly sized pilot holes shall be drilled for screws in door edges. Factory applied labels shall remain intact where installed. Labeled hinge stile edge and top edge of door shall not be trimmed. Lockstile edge and bottom edge may be trimmed only to the extent recommended by the door manufacturer.

3.2 FIELD FINISHING

Doors to receive field finishing, whether paint or natural finish, shall be factory primed or sealed, as required, and then shall be finished in accordance with Section 09900 PAINTING, GENERAL. Factory applied sealer shall not prevent doors from accepting field stain and finish. Color shall be in accordance with Section 09915 COLOR SCHEDULE. Field touch-up of factory finishes shall be in accordance with manufacturers instructions.

-- End of Section --

SECTION 08360

SECTIONAL OVERHEAD DOORS

PART 1 GENERAL

1.1 REFERENCES

The publications listed below form a part of this specification to the extent referenced. The publications are referred to in the text by basic designation only.

AMERICAN SOCIETY FOR TESTING AND MATERIALS (ASTM)

ASTM A 229/A 229M	(1993) Steel Wire, Oil-Tempered for Mechanical Springs
ASTM A 653/A 653M	(1996) Steel Sheet, Zinc-Coated (Galvanized) or Zinc-Iron Alloy-Coated (Galvannealed) by the Hot-Dip Process
ASTM E 330	(1990) Structural Performance of Exterior Windows, Curtain Walls, and Doors by Uniform Static Air Pressure Difference

AMERICAN SOCIETY OF CIVIL ENGINEERS (ASCE)

ASCE 7	(1995) Minimum Design Loads for Buildings and Other Structures

DOOR AND ACCESS SYSTEM MANUFACTURERS ASSOCIATION (DASMA)

DASMA 102	(1996) Specifications for Sectional Overhead Type Doors
DASMA 105	(1992) Test Method for Thermal Transmittance and Air Infiltration of Garage Doors

NATIONAL ELECTRICAL MANUFACTURERS ASSOCIATION (NEMA)

NEMA ICS 2	(1993) Industrial Control and Systems Controllers, Contactors, and Overload Relays Rated Not More Than 2,000 Volts AC or 750 Volts DC
NEMA ICS 6	(1993) Industrial Control and Systems, Enclosures
NEMA MG 1	(1993; Rev 1; Rev 2; Rev 3) Motors and Generators

NATIONAL FIRE PROTECTION ASSOCIATION (NFPA)

NFPA 70	(1996) National Electrical Code

1.2 DESCRIPTION

Sectional overhead doors shall conform to DASMA 102 and the requirements specified herein. Sectional overhead doors shall be of the standard lift type designed to slide up and back into a horizontal overhead position. Each door shall be provided with a permanent label showing the manufacturer's name and address and the model/serial number of the door.

1.2.1 Wind Load Requirements

Doors and components shall be designed to withstand wind loads determined by procedures in ASCE 7 and the wind speed indicated on the structural drawings. Doors shall be constructed to sustain a superimposed load, both inward and outward, equal to 1-1/2 times the minimum design wind load. The door shall support the superimposed loads for a minimum period of 10 seconds without evidence of serious damage and shall be operable after conclusion of the tests. Calculations shall be provided that prove the door design meets the design windload requirements or test data showing compliance with design windload requirements for the specific door design tested in accordance with the uniform static air pressure difference test procedures of ASTM E 330 shall be provided.

1.2.2 Operation Cycle Life

Doors shall be equipped with torsion springs designed to operate through a minimum of 100,000 cycles. One complete cycle of the door begins with the door in the closed position. The door is then moved to the open position and back to the closed position.

1.3 SUBMITTALS

Government approval is required for submittals with a "GA" designation; submittals having an "FIO" designation are for information only. The following shall be submitted in accordance with Section 01330 SUBMITTAL PROCEDURES:

SD-01 Data

Sectional Overhead Door Unit; FIO.

Manufacturer's catalog data, test data, and summary of forces and loads on walls/jambs.

SD-04 Drawings

Sectional Overhead Door Unit; FIO.

Drawings showing the location of each door including schedules. Drawings shall include elevations of each door type; details and method of anchorage; details of construction; method of assembling sections; location and installation of hardware; shape and thickness of materials; details of joints and connections; and details of tracks, rollers, power operators, controls, and other fittings.

SD-06 Instructions

Sectional Overhead Door Unit; FIO.

Manufacturer's preprinted installation instructions.

SD-13 Certificates

Design; FIO.

Manufacturer's certificates stating that the doors and operators have been designed to meet the specified requirements.

SD-19 Operation and Maintenance Manuals

Sectional Overhead Door Unit; FIO.

Six complete copies of maintenance instructions listing routine maintenance procedures, possible breakdowns and repairs, and troubleshooting guides. The instructions shall include simplified diagrams for the equipment as installed. Also spare parts data for each different item of material and equipment specified, including a complete list of parts and supplies, source of supply, and a list of high mortality maintenance parts. Six complete copies of operation instructions outlining the step-by-step procedure required for motorized door operation. The instructions shall include the manufacturer's name, model/serial number, service manual, parts list, and brief description of all equipment and their basic operating features.

1.4 DELIVERY AND STORAGE

Doors shall be delivered to the jobsite wrapped in a protective covering with the brands and names clearly marked thereon. Doors shall be stored in a dry location that is adequately ventilated and free from dust or water, and in a manner that permits easy access for inspection and handling. Doors shall be handled carefully to prevent damage to the faces, edges, and ends. Damaged items that cannot be restored to like-new condition shall be replaced.

1.5 WARRANTY

Manufacturer's standard performance guarantees or warranties that extend beyond a 1-year period shall be provided.

PART 2 PRODUCTS

2.1 SECTIONAL OVERHEAD DOORS

2.1.1 Door Sections

Sectional overhead door sections shall be of the height indicated or the manufacturer's standard, but the height of an intermediate section shall not exceed 24 inches. Bottom sections may be varied to suit door height but shall not exceed 30 inches in height. Meeting rails shall have interlocking joints to provide weatherproof closure and to assure alignment for the full width of the door. Door sections shall be double skin insulated panels with integral joint, and shall be formed of hot-dipped galvanized steel. Exterior skin shall be constructed of galvanized steel not lighter than 16 gauge with flush surface. The panel sections shall supply a minimum R-Value of 7.5 when tested

in accordance with DASMA 105. Panels shall be of the type standard with the manufacturer. Sections shall consist of a chlorofluorocarbon free urethane or polystyrene core not less than 1-3/8 inch thick, completely enclosed within metal facings. Exterior face of sections shall be as specified. Interior face shall have a minimum wall thickness of 0.010 inch steel.

2.1.2 Tracks

Tracks shall be the manufacturer's standard 2 inch track, formed of galvanized steel not lighter than 14 gauge Vertical tracks shall be attached to continuous steel angles not lighter than 11 gauge, installed on the walls, and shall be inclined through the use of adjustable brackets to provide a weathertight closure. Horizontal track shall be reinforced with galvanized-steel angles and shall be supported from overhead structural members and cross braced as required to provide a rigid installation.

2.1.3 Hardware

Heavy duty hinges, brackets, rollers, locking devices, and other hardware required for a complete installation shall be provided. Roller brackets and hinges shall be of minimum 14 gauge galvanized steel, and shall be securely attached to stiles with sheet metal screws or through bolts or with sheet metal screws into minimum 16 gauge stiles. Double hinges shall be provided at ends of panels for doors more than 16 feet wide. Rollers shall be provided with a minimum of 10 ball bearings. Doors shall be reinforced at roller-hinge connections.

2.1.4 Counterbalancing

Doors shall be counterbalanced by means of helical-wound torsion springs mounted on a steel shaft. Springs shall be oil-tempered springwire conforming to ASTM A 229/A 229M. Springs shall be adjustable, and shall be connected to doors with cable having a safety factor of at least 5 to 1.

2.1.5 Weatherstripping

Exterior doors shall be provided with weatherproof joints between sections. Head and jambs shall be provided with rubber or vinyl bulb or leaf type weatherstripping, or with nylon-brush type weatherstripping. Bottom of door shall be provided with a compressible neoprene, rubber, or vinyl weather seal. Weatherstripping shall be adjustable. On electric power operated doors, the bottom seal shall be a combination weather seal and sensing edge.

2.1.6 Operation

Doors shall be operated by means of electric power with auxiliary chain hoist. Equipment shall be designed and manufactured for usage in non-hazardous areas.

2.1.6.1 Electric Power With Auxiliary Chain-Hoist Operation

Electric power operators shall be heavy-duty industrial type. The unit shall operate the door through the operational cycle life specified. The electric power operator shall be complete with electric motor, auxiliary operation, necessary means of reduction, magnetic brake, brackets, push button controls, limit switches, magnetic reversing starter, and other accessories necessary to operate components specified in other paragraphs of this section. Operators shall be jackshaft type. The operator shall be designed so that the motor may

be removed without disturbing the limit-switch settings and without affecting the emergency chain operator. Doors shall be provided with an auxiliary operator for immediate emergency manual operation of the door in case of electrical failure. The emergency manual operating mechanism shall be arranged so that it may be operated from the floor without affecting the timing of the limit switches. A mechanical device shall be included that will disconnect the motor from the drive operating mechanism when the auxiliary operator is used. Operation shall be by means of galvanized endless chain operating over a sprocket and extending to within 3 feet of the floor. Operating force shall not exceed 35 pounds. Where control voltages differ from motor voltage, a control voltage transformer shall be provided in and as part of the electric power operator system. Control voltage shall not exceed 120 volts.

a. Motors: Drive motors shall conform to NEMA MG 1, shall be high-starting torque, reversible type, and shall be of sufficient horsepower and torque output to move the door in either direction from any position at a speed range of 6 to 8 inches per second without exceeding the rated capacity. Motors shall be suitable for operation on the current indicated on the electrical drawings and shall be suitable for across-the-line starting. Motors shall be designed to operate at full capacity over a supply voltage variation of plus or minus 10 percent of the motor voltage rating. Motors shall be provided with overload protection.

b. Controls: Controls shall be as indicated on the electrical drawings. Control equipment shall conform to NEMA ICS 2. Enclosures shall conform to NEMA ICS 6, Type 12 (industrial use). Exterior control stations (where indicated) shall be weatherproof key-operated type with corrosion-resistant cast-metal cover. Each control station shall be of the 3-position button type, marked "OPEN," "CLOSE," and "STOP." The "OPEN" and "STOP" controls shall be of the momentary contact type with seal-in contact. The "CLOSE" control shall be of the constant pressure type. When the door is in motion and the "STOP" control is pressed, the door shall stop instantly and remain in the stop position; from the stop position, the door shall be operable in either direction by the "OPEN" or "CLOSE" controls. Controls shall be of the full-guarded type to prevent accidental operation. Readily adjustable limit switches shall be provided to automatically stop the doors at their fully open and closed positions.

c. Sensing Edge Device: The bottom edge of electric power operated doors shall have a sensing edge that will immediately reverse the door movement upon contact with an obstruction and cause the door to return to its full open position. The sensing edge shall not substitute for a limit switch. Exterior doors shall be provided with a combination compressible weather seal and sensing edge. The sensing edge shall be an electrical type for non-hazardous areas with components connected in series to assure the edge is operable before the door will open.

d. Electrical Work: Conduit and wiring necessary for proper operation shall be provided under Section 16415 ELECTRICAL WORK, INTERIOR. Flexible connections between doors and fixed supports shall be made with extra flexible Type SJO cable, except in hazardous locations where wiring shall conform to NFPA 70, as appropriate. The cable

shall have a spring-loaded automatic take up reel or a coil cord equivalent device.

2.1.7 Locking

Locking shall consist of self-locking gearing with chain lock for emergency hand chain.

2.1.8 Finish

Steel surfaces shall be hot-dip galvanized G60 in accordance with ASTM A 653/A 653M, and shall be treated for paint adhesion and shall receive a baked on prime coat for field finishing. Finish coat shall be in accordance with Section 09900 PAINTING, GENERAL.

PART 3 EXECUTION

3.1 INSTALLATION

Doors shall be installed in accordance with approved detail drawings and manufacturer's instructions. Anchors and inserts for guides, brackets, motors, switches, hardware, and other accessories shall be accurately located. Upon completion, doors shall be free from warp, twist, or distortion. Doors shall be lubricated, properly adjusted, and demonstrated to operate freely. Doors to receive field finishing shall be finished in accordance with Section 09900 PAINTING, GENERAL. Caulking and sealants shall be in accordance with Section 07900 JOINT SEALING.

-- End of Section --

SECTION 08520

ALUMINUM WINDOWS

PART 1 GENERAL

1.1 REFERENCES

The publications listed below form a part of this specification to the extent referenced. The publications are referred to in the text by basic designation only.

AMERICAN ARCHITECTURAL MANUFACTURERS ASSOCIATION (AAMA)

AAMA 101	(1993) Voluntary Specifications for Aluminum and Poly(Vinyl Chloride) (PVC) Prime Windows and Glass Doors
AAMA 605.2	(1992; Addenda Feb 1994) Voluntary Specification for High Performance Organic Coatings on Architectural Aluminum Extrusions and Panels
AAMA 1503.1	(1988) Voluntary Test Method for Thermal Transmittance and Condensation Resistance of Windows, Doors and Glazed Wall Sections

AMERICAN SOCIETY FOR TESTING AND MATERIALS (ASTM)

ASTM E 283	(1991) Determining the Rate of Air Leakage Through Exterior Windows, Curtain Walls, and Doors Under Specified Pressure Differences Across the Specimen
ASTM E 330	(1990) Structural Performance of Exterior Windows, Curtain Walls, and Doors by Uniform Static Air Pressure Difference
ASTM E 547	(1993) Water Penetration of Exterior Windows, Curtain Walls, and Doors by Cyclic Static Air Pressure Differential

INSECT SCREENING WEAVERS ASSOCIATION (ISWA)

ISWA IWS 089	(1990) Recommended Standards and Specifications for Insect Wire Screening (Wire Fabric)

NATIONAL FIRE PROTECTION ASSOCIATION (NFPA)

NFPA 101	(1994) Safety to Life from Fire in Buildings and Structures

SCREEN MANUFACTURERS ASSOCIATION (SMA)

SMA 1004	(1987) Aluminum Tubular Frame Screens for Windows

1.2 WINDOW PERFORMANCE

Aluminum windows shall be designed to meet the following performance requirements. Testing requirements shall be performed by an independent testing laboratory or agency.

1.2.1 Structural Performance

Structural test pressures on window units shall be for positive load (inward) and negative load (outward) in accordance with ASTM E 330. After testing, there shall be no glass breakage, permanent damage to fasteners, hardware parts, support arms or actuating mechanisms or any other damage which could cause window to be inoperable. There shall be no permanent deformation of any main frame, sash or ventilator member in excess of the requirements established by AAMA 101 for the window types and classification specified in this section.

1.2.2 Air Infiltration

Air infiltration shall not exceed the amount established by AAMA 101 for each window type when tested in accordance with ASTM E 283.

1.2.3 Water Penetration

Water penetration shall not exceed the amount established by AAMA 101 for each window type when tested in accordance with ASTM E 547.

1.2.4 Thermal Performance

Thermal transmittance shall not exceed R-Value Class R3.33 when tested in accordance with AAMA 1503.1.

1.2.5 Life Safety Criteria

Windows in bunk rooms shall conform to NFPA 101 Life Safety Code for rescue and second means of escape.

1.3 SUBMITTALS

Government approval is required for submittals with a "GA" designation; submittals having an "FIO" designation are for information only. The following shall be submitted in accordance with Section 01330 SUBMITTAL PROCEDURES:

SD-01 Data

Aluminum Windows; FIO.

Manufacturer's descriptive data and catalog cut sheets.

SD-04 Drawings

Aluminum Windows; FIO. Insect Screens; FIO.

Drawings indicating elevations of window, rough-opening dimensions for each type and size of window, full-size sections, thicknesses of metal, fastenings, methods of installation and anchorage, connections with other work, type of

wall construction, size and spacing of anchors, method of glazing, types and locations of operating hardware, mullion details, weatherstripping details, screen details including method of attachment, and window schedules showing locations of each window type.

SD-06 Instructions

Aluminum Windows; FIO.

Manufacturer's preprinted installation instructions and cleaning instructions.

SD-09 Reports

Aluminum Windows; FIO.

Reports for each type of aluminum window attesting that identical windows have been tested and meet all performance requirements established under paragraph WINDOW PERFORMANCE.

SD-13 Certificates

Aluminum Windows; FIO.

Certificates stating that the aluminum windows are AAMA certified conforming to requirements of this section. Labels or markings permanently affixed to the window will be accepted in lieu of certificates.

SD-14 Samples

Aluminum Windows; GA.

Manufacturer's standard color samples of the specified finishes.

1.4 QUALIFICATION

Window manufacturer shall specialize in designing and manufacturing the type of aluminum windows specified in this section, and shall have a minimum of 5 years of documented successful experience. Manufacturer shall have the facilities capable of meeting contract requirements, single-source responsibility and warranty.

1.5 DELIVERY AND STORAGE

Aluminum windows shall be delivered to project site and stored in accordance with manufacturer's recommendations. Damaged windows shall be replaced with new windows.

1.6 WARRANTY

Manufacturer's standard performance guarantees or warranties that extend beyond a 1 year period shall be provided.

PART 2 PRODUCTS

2.1 ALUMINUM WINDOW TYPES

Aluminum windows shall consist of complete units including sash, glass, frame, subframes, weatherstripping, insect screens, and hardware. Windows shall conform to AAMA 101. Windows shall be double-glazed with thermally broken frames.

2.1.1 Single-Hung Windows

Aluminum single-hung windows shall conform to AAMA 101 DH-HC35 type which operate vertically with the weight of sash offset by a counterbalancing mechanism mounted in window to hold the sash stationary at any open position. Windows shall be provided with locking devices to secure the sash in the closed position. Counterbalancing mechanisms shall be easily replaced after installation.

2.2 WEATHERSTRIPPING

Weatherstripping for ventilating sections shall be of type designed to meet water penetration and air infiltration requirements specified in this section in accordance with AAMA 101, and shall be manufactured of material compatible with aluminum and resistant to weather. Weatherstrips shall be factory-applied and easily replaced in the field. Neoprene or polyvinylchloride weatherstripping are not acceptable where exposed to direct sunlight.

2.3 INSECT SCREENS

Insect screens shall be aluminum window manufacturer's standard design, and shall be provided on all windows. Insect screens shall be fabricated of roll-formed tubular-shaped aluminum frames conforming to SMA 1004 and (18 x 16) aluminum mesh screening conforming with ISWA IWS 089, Type III.

2.4 ACCESSORIES

2.4.1 Fasteners

Fastening devices shall be window manufacturer's standard design made from aluminum, non-magnetic stainless steel, cadmium-plated steel, nickel/chrome-plated steel or magnetic stainless steel in compliance with AAMA 101. Self-tapping sheet metal screws will not be acceptable for material thicker than 1/16 inch.

2.4.2 Hardware

Hardware shall be as specified for each window type and shall be fabricated of aluminum, stainless steel, cadmium-plated steel, zinc-plated steel or nickel/chrome-plated steel of quality established by AAMA 101.

2.4.3 Window Anchors

Anchoring devices for installing windows shall be made of aluminum, cadmium-plated steel, stainless steel, or zinc-plated steel conforming to AAMA 101.

2.5 GLASS AND GLAZING

Aluminum windows shall be factory glazed, designed for inside glazing, and field glazing for replacement. Glass shall be once inch insulating glass as specified in Section 08810 GLASS AND GLAZING. Units shall be complete with glass and glazing provisions to meet AAMA 101. Glazing material shall be compatible with aluminum, and shall not require painting.

2.6 FINISH

Exposed surfaces of aluminum windows shall be finished with a two-coat fluoropolymer coating system containing at least 70 percent by weight polyvinylidene fluoride, PVF2 resin, factory-applied, oven-baked, conforming to AAMA 605.2, with a primer coat of 0.20 to 0.30 mils and a color coat of minimum 1.0 mils, total dry film thickness of 1.20 to 1.3 mils. Finish shall be free of scratches and other blemishes. Color shall be in accordance with Section 09915 COLOR SCHEDULE.

PART 3 EXECUTION

3.1 INSTALLATION

Aluminum windows shall be installed in accordance with the contract drawings, shop drawings and manufacturer's published instructions. Aluminum surfaces in contact with masonry, concrete, wood and dissimilar metals other than stainless steel, zinc, cadmium or small areas of white bronze, shall be protected from direct contact using protective materials recommended by AAMA 101. The completed window installation shall be watertight and sealed in accordance with Section 07900 JOINT SEALING. Glass and glazing shall be factory installed in accordance with requirements of this section and Section 08810 GLASS AND GLAZING.

3.2 ADJUSTMENTS AND CLEANING

3.2.1 Hardware Adjustments

Final operating adjustments shall be made after glazing work is complete. Operating sash or ventilators shall operate smoothly and shall be weathertight when in locked position.

3.2.2 Cleaning

Aluminum window finish and glass shall be cleaned on exterior and interior sides in accordance with window manufacturer's recommendations. Alkaline or abrasive agents shall not be used. Precautions shall be taken to avoid scratching or marring window finish and glass surfaces.

-- End of Section --

SECTION 08700

BUILDERS' HARDWARE

PART 1 GENERAL

1.1 REFERENCES

The publications listed below form a part of this specification to the extent referenced. The publications are referred to in the text by basic designation only.

AMERICAN SOCIETY FOR TESTING AND MATERIALS (ASTM)

ASTM E 283	(1991) Determining the Rate of Air Leakage Through Exterior Windows, Curtain Walls and Doors Under Specified Pressure Differences Across the Specimen
ASTM F 883	(1990) Padlocks

BUILDERS HARDWARE MANUFACTURERS ASSOCIATION (BHMA)

BHMA-01	(Effective thru Jun 1995) Directory of Certified Locks & Latches
BHMA-02	(Effective thru Jul 1995) Directory of Certified Door Closers
BHMA-03	(Effective thru Jul 1996) Directory of Certified Exit Devices
BHMA ANSI/BHMA A156.1	(1988) Butts and Hinges
BHMA ANSI/BHMA A156.2	(1989) Bored and Preassembled Locks and Latches
BHMA ANSI/BHMA A156.3	(1994) Exit Devices
BHMA ANSI/BHMA A156.4	(1992) Door Controls - Closers
BHMA ANSI/BHMA A156.5	(1992) Auxiliary Locks & Associated Products
BHMA ANSI/BHMA A156.6	(1994) Architectural Door Trim
BHMA ANSI/BHMA A156.7	(1988) Template Hinge Dimensions
BHMA ANSI/BHMA A156.8	(1994) Door Controls - Overhead Stops and Holders
BHMA ANSI/BHMA A156.13	(1994) Mortise Locks & Latches
BHMA ANSI/BHMA A156.16	(1989) Auxiliary Hardware
BHMA ANSI/BHMA A156.18	(1993) Materials and Finishes
BHMA ANSI/BHMA A156.21	(1989) Thresholds

DOOR AND HARDWARE INSTITUTE (DHI)

DHI-03	(1989) Keying Systems and Nomenclature
DHI-04	(1976) Recommended Locations for Builders' Hardware for Custom Steel Doors and Frames
DHI-05	(1990) Recommended Locations for Architectural Hardware for Standard Steel Doors and Frames
DHI-A115.IG	(1994) Installation Guide for Doors and Hardware
DHI A115-W	(Varies) Wood Door Hardware Standards (Incl All5-W1 thru A115-W9)

NATIONAL FIRE PROTECTION ASSOCIATION (NFPA)

NFPA 80	(1995) Fire Doors and Windows
NFPA 101	(1997) Safety to Life from Fire in Buildings and Structures

1.2 SUBMITTALS

Government approval is required for submittals with a "GA" designation; submittals having an "FIO" designation are for information only. The following shall be submitted in accordance with Section 01330 SUBMITTAL PROCEDURES:

SD-01 Data

Hardware and Accessories; FIO.

Manufacturer's descriptive data, technical literature, catalog cuts, and installation instructions. Spare parts data for locksets, exit devices, closers, electric locks, electric strikes, electro-magnetic closer holder release devices, and electric exit devices, after approval of the detail drawings, and not later than 3 months prior to the date of beneficial occupancy. The data shall include a complete list of parts and supplies, with current unit prices and source of supply.

SD-07 Schedules

Hardware Schedule; GA.

Hardware schedule listing all items to be furnished. The schedule shall include for each item: the quantities; manufacturer's name and catalog numbers; the ANSI number specified, sizes; detail information or catalog cuts; finishes; door and frame size and materials; location and hardware set identification cross-references to drawings; corresponding reference standard type number or function number from manufacturer's catalog if not covered by ANSI or BHMA; and list of abbreviations and template numbers.

Keying Schedule; GA.

Keying schedule developed in accordance with DHI-03, after the keying meeting with the user.

SD-13 Certificates

Hardware and Accessories; FIO.

The hardware manufacturer's certificates of compliance stating that the supplied material or hardware item meets specified requirements. Each certificate shall be signed by an official authorized to certify in behalf of the product manufacturer and shall identify quantity and date or dates of shipment or delivery to which the certificates apply. A statement that the proposed hardware items appear in BHMA-01, BHMA-02 and BHMA-03 directories of certified products may be submitted in lieu of certificates.

1.3 PREDELIVERY CONFERENCE

Upon approval of the Hardware Schedule, the construction Contractor shall arrange a conference with the hardware supplier, Contracting Officer and the using agency to determine keying system requirements. Location of the key control storage system, set-up and key identification labeling will also be determined.

1.4 DELIVERY, STORAGE, AND HANDLING

Hardware shall be delivered to the project site in the manufacturer's original packages. Each article of hardware shall be individually packaged in the manufacturer's standard commercial carton or container, and shall be properly marked or labeled to be readily identifiable with the approved hardware schedule. Each change key shall be tagged or otherwise identified with the door for which its cylinder is intended. Where double cylinder functions are used or where it is not obvious which is the key side of a door, appropriate instructions shall be included with the lock and on the hardware schedule. Manufacturer's printed installation instructions, fasteners, and special tools shall be included in each package.

1.5 SPECIAL TOOLS

Special tools, such as those supplied by the manufacturer, unique wrenches, and dogging keys, shall be provided as required to adjust hardware items.

1.6 WARRANTY

Manufacturer's standard performance guarantees or warranties that extend beyond a one year period shall be provided.

1.7 OPERATION AND MAINTENANCE MANUALS

Three complete copies of maintenance instructions listing routine maintenance procedures, possible breakdowns and repairs, and troubleshooting guides shall be provided.

PART 2 PRODUCTS

2.1 GENERAL HARDWARE REQUIREMENTS

Hardware shall conform to the requirements specified herein and the HARDWARE SETS listing at the end of this section. Hardware set numbers correspond to the set numbers shown on the drawings.

2.2 TEMPLATES

Requirements for hardware to be mounted on metal doors or metal frames shall be coordinated between hardware manufacturer and door or frame manufacturer by use of templates and other information to establish location, reinforcement required, size of holes, and similar details. Templates of hinges shall conform to BHMA ANSI/BHMA A156.7.

2.3 HINGES

Hinges shall conform to BHMA ANSI/BHMA A156.1. Hinges used on metal doors and frames shall also conform to BHMA ANSI/BHMA A156.7. Except as otherwise specified, hinge sizes shall conform to the hinge manufacturer's printed recommendations.

2.3.1 Hinges for Reverse Bevel Doors with Locks

Hinges for reverse bevel doors with locks shall have pins that are made nonremovable by means such as a set screw in the barrel, or safety stud, when the door is in the closed position.

2.4 LOCKS AND LATCHES

To the maximum extent possible, locksets, latchsets and deadlocks shall be the products of a single manufacturer.

2.4.1 Bored Lock and Latchsets

Bored lock, latchsets, and strikes shall be series 4000 and shall conform to BHMA ANSI/BHMA A156.2, Grade 1. Bored type locks and latches shall have adjustable bevel fronts or otherwise conform to the shape of the door.

2.4.2 Lock Cylinders

Lock cylinders shall comply with BHMA ANSI/BHMA A156.5. Lock cylinder shall have not less than six pins. Cylinders shall have key removable type cores. Construction interchangeable cores shall be provided. Disassembly of knob or lockset shall not be required to remove core from lockset. All locksets, lockable exit devices, and padlocks shall accept same interchangeable cores.

2.4.3 Padlocks

Padlocks shall conform to ASTM F 883.

2.4.4 Lock Trim

Lock trim shall be cast, forged, or heavy wrought construction of commercial plain design. In addition to meeting the test requirement of BHMA ANSI/BHMA A156.2 or BHMA ANSI/BHMA A156.13, lever handles, roses, and escutcheons shall be 0.050 inch thick, if unreinforced. If reinforced, the outer shell shall be 0.035 inch thick and the combined thickness shall be 0.070 inch except that lever shanks shall be not less than 0.060 inch thick. Lever handles shall be of plain design with ends returned to no more than 1/2 inch from the door face.

2.5 EXIT DEVICES AND EXIT DEVICE ACCESSORIES

Exit devices and exit device accessories shall conform to BHMA ANSI/BHMA A156.3, Grade 1. Trim shall be of wrought construction and commercial plain design with straight, beveled, or smoothly rounded sides, corners, and edges. Adjustable strikes shall be provided for rim type and vertical rod devices. Touch bars shall be provided in lieu of conventional crossbars and arms.

2.6 KEYING

Locks shall be keyed in sets or subsets as scheduled. Locks shall be furnished with the manufacturer's standard construction key system. Change keys for locks shall be stamped with change number and the inscription "U.S. Property - Do Not Duplicate." Keys shall be supplied as follows:

Locks:	3 change keys each lock.
Blank keys:	10% total.

The keys shall be furnished to the Contracting Officer arranged in a container in sets or subsets as scheduled.

2.7 DOOR CLOSING DEVICES

Door closing devices shall be surface type conforming to BHMA ANSI/BHMA A156.4, Grade 1. Closing devices shall be products of one manufacturer for each type specified. The opening resistance of closing devices shall not exceed 15 1bf applied at the latch stile. Except as otherwise specified, sizes shall conform to the manufacturer's published recommendations. Closers for outswinging exterior doors shall have parallel arms or shall be top jamb mounted. Closers for doors close to a wall shall be of narrow projection so as not to strike the wall at the 90-degree open position.

2.8 DOOR CONTROLS - OVERHEAD HOLDERS

Door controls - overhead holders shall conform to BHMA ANSI/BHMA A156.8.

2.9 ARCHITECTURAL DOOR TRIM

Architectural door trim shall conform to BHMA ANSI/BHMA A156.6.

2.9.1 Kick Plates

Kick plates shall be Type J106 plastic, black in color. Width of plates shall be 2 inches less than door width for single doors and 1 inch less for pairs of doors. Height shall be 10 inches,.

2.9.2 Push Plates

2.9.2.1 Combination Push-Pull Plates

Combination push-pull plates shall be Type J303, 0.050 inch thick minimum stainless steel beveled four edges.

2.9.3 Door Pulls

Door pulls shall be Category J400 stainless steel of plain modern design. Pulls for hollow metal or mineral core wood doors shall be Type J405 thru-bolted to Type J301 flat push plates.

2.10 AUXILIARY HARDWARE

Auxiliary hardware shall conform to BHMA ANSI/BHMA A156.16.

2.11 MISCELLANEOUS

2.11.1 Metal Thresholds

Thresholds shall conform to BHMA ANSI/BHMA A156.21. Thresholds shall be extruded aluminum of the type indicated and shall provide proper clearance and an effective seal with specified weather stripping. Thresholds shall be beveled with slopes not exceeding 1:2 and with heights not exceeding 1/2 inch. Air leakage rate of weatherstripping shall not exceed 0.5 cubic feet per minute per lineal foot of crack when tested in accordance with ASTM E 283 at standard test conditions.

2.11.2 Rain Drips

Extruded aluminum, not less than 0.07 inch thick, painted. Door sill rain drips shall be 1-1/2 inches to 1-3/4 inches high by 5/8 inch projection. Overhead rain drips shall be approximately 1-1/2 inches high by 2-1/2 inches projection and shall extend 2 inches on either side of the door opening width.

2.11.3 Aluminum Housed Type Weatherseals

Weatherseals of the type indicated shall consist of extruded aluminum retainers not less than 0.07 inch wall thickness with vinyl, neoprene, silicone rubber, polyurethane or vinyl brush inserts. Aluminum shall be clear (natural) anodized. Weatherseal material shall be of an industrial/commercial grade. Seals shall remain functional through all weather and temperature conditions. Air leakage rate of weatherstripping shall not exceed 0.5 cubic feet per minute per lineal foot of crack when tested in accordance with ASTM E 283 at standard test conditions.

2.12 FASTENINGS

Fastenings of proper type, size, quantity, and finish shall be supplied with each article of hardware. Machine screws and expansion shields shall be used for attaching hardware to concrete or masonry. Fastenings exposed to the weather in the finished work shall be of brass, bronze, or stainless steel. Sex bolts, through bolts, or machine screws and grommet nuts shall employ one-way screws or other approved tamperproof screws.

2.13 FINISHES

Unless otherwise specified, finishes shall conform to those identified in BHMA ANSI/BHMA A156.18. Where painting of primed surfaces is required, painting is specified in Section 09900 PAINTING, GENERAL.

2.14 HARDWARE FOR FIRE DOORS

Hardware for fire doors shall conform to the requirements of NFPA 80 and NFPA 101.

PART 3 EXECUTION

3.1 APPLICATION

Hardware shall be located in accordance with DHI-04 and DHI-05, except that deadlocks shall be mounted 48 inches above finish floor. When approved, slight variations in locations or dimensions will be permitted. Application shall be in accordance with DHI-A115.IG or DHI A115-W. Door control devices for exterior doors such as closers and holders, shall be attached to doors with sex bolts. Alternate fastening methods may be approved by the Contracting Officer when manufacturers' documentation is submitted to verify that the fastening devices and door reinforcements are adequate to resist wind induced stresses.

3.1.1 Hardware for Fire Doors

Hardware for fire doors shall be installed in accordance with the requirements of NFPA 80. Exit devices installed on fire doors shall have a visible label bearing the marking "Fire Exit Hardware". Other hardware installed on fire doors, such as locksets, closers, and hinges shall have a visible label or stamp indicating that the hardware items have been approved by an approved testing agency for installation on fire-rated doors.

3.1.2 Door-Closing Devices

Door-closing devices shall be installed and adjusted in accordance with the templates and printed instructions supplied by the manufacturer of the devices. Insofar as practicable, doors opening to or from halls and corridors shall have the closer mounted on the room side of the door.

3.1.3 Kick Plates

Kick plates shall be installed on the push side of doors.

3.1.4 Thresholds

Thresholds shall be secured with a minimum of three fasteners per single door width and six fasteners per double door width with a maximum spacing of 12 inches. Exterior thresholds shall be installed in a bed of butyl sealant with expansion anchors and stainless steel screws. Minimum screw size shall be No. 10 length, dependent on job conditions, with a minimum of 3/4 inch thread engagement into the floor or anchoring device used.

3.1.5 Rain Drips

Door sill rain drips shall align with the bottom edge of the door. Overhead rain drips shall align with bottom edge of door frame rabbet. Drips shall be set in butyl sealant and fastened with stainless steel screws.

3.1.6 Weatherseals

Weatherseals shall be located as indicated, snug to door face and fastened in place with color matched metal screws after door and frames have been finish painted. Screw spacing shall be as recommended by manufacturer.

3.2 HARDWARE SETS

SET 1

3	Hinges	A8111, 626 Finish	
1	Exit Device	Grade 1 type 1, Function 08, 689 Finish	
1	Closer	C02021-PT4H, 689 Finish	
1	Kickplate	J106, Black	
1	Stop	L12161, 626 Finish	
3	Silencers	L03011, Gray color	
1	Set W/S	303CV	Pemko
1	Threshold	271A	Pemko
1	Door Stop	307CV	Pemko

SET 2

1	Padlock	606 Finish

Balance of hardware by Door Supplier

SET 3

3	Hinges	A5111, 630 Finish	
1	Exit Device	Grade 1 Type 1, Function 08, 689 Finish	
1	Cylinder	Type Required, 626 Finish	
1	Closer	C02061-PT4G, H, 689 Finish	
1	Kickplate	J106	
1	set W/S	322 CSN	Pemko
1	Door Sweep	307AV	Pemko
1	Threshold	271A with 282A riser	Pemko
1	Overhead Drip Cap	346C	Pemko

SET 4

3	Hinges	A5112, 630 Finish	
1	Lockset	F86 (Lever)	
1	Overhead/Stop Holders	C08511, 626 Finish	
1	Set W/S	303AV	Pemko
1	Door Sweep	307AV	Pemko
1	Threshold	271A with 282A riser	Pemko
1	Overhead Drip Cap	346C	Pemko

SET 5

3	Hinges	A5112, 630 Finish	
1	Lockset	F82 (Lever), 626 Finish	
1	Closer	C02061-PT4G, H, 689 Finish	
1	Kickplate	J106, Black	
1	Set W/S	322CSN	Pemko
1	Door Sweep	307AV	Pemko
1	Threshold	271A with 282A riser	Pemko
1	Overhead Drip Cap	346C	Pemko

SET 6

3	Hinges	A8112, 626 Finish
1	Privacy Lock	F76 (Lever), 626 Finish
1	Stop	L02161, 626 Finish
3	Silencers	L03011, Gray Color

SET 7

3	Hinges	A8112, 626 Finish
1	Lockset	F86 (Lever), 626 Finish
1	Closer	C02011-OR C02021-PT411, 689 Finish
1	Kickplate	J106, Black
1	Stop	L02161, 626 Finish
3	Silencers	L03011, Gray color

SET 8

3	Hinges	A8112, 626 Finish
1	Lockset	F82 (Lever), 626 Finish
1	Stop	L12161, 626 Finish
3	Silencers	L03011, Gray color

SET 9

3	Hinges	A8112, 626 Finish
1	Latchset	F75 Lever, 626 Finish
1	Stop	L12161, 626 Finish
3	Silencers	L03011, Gray color

SET 10

3	Hinges	A8112, 626 Finish	
1	Push Plate	J301, 626 Finish	
1	Pull Plate	J405, 626 Finish	
1	Stop/Holder	495 with 497 strike, 626 Finish	Ives
1	Kickplate	J102, Black	
3	Silencers	L03011, Gray	

-- End of Section --

SECTION 08810

GLASS AND GLAZING

PART 1 GENERAL

1.1 REFERENCES

The publications listed below form a part of this specification to the extent referenced. The publications are referred to in the text by basic designation only.

AMERICAN SOCIETY FOR TESTING AND MATERIALS (ASTM)

ASTM C 669	(1995) Glazing Compounds for Back Bedding and Face Glazing of Metal Sash
ASTM C 1036	(1991) Flat Glass
ASTM C 1048	(1992) Heat-Treated Flat Glass - Kind HS, Kind FT Coated and Uncoated Glass
ASTM D 395	(1989; R 1994) Rubber Property - Compression Set
ASTM E 773	(1988) Seal Durability of Sealed Insulating Glass Units
ASTM E 774	(1992) Sealed Insulating Glass Units

COMMERCIAL ITEM DESCRIPTION (CID)

CID A-A-378	(Basic) Putty: Linseed Oil Type, (for Wood-Sash-Glazing)

GLASS ASSOCIATION OF NORTH AMERICA (GANA)

GANA-01	(1990) Glazing Manual
GANA-04	(1995) Engineering Standards Manual

NATIONAL FIRE PROTECTION ASSOCIATION (NFPA)

NFPA 80	(1995) Fire Doors and Fire Windows
NFPA 252	(1995) Fire Tests of Door Assemblies

1.2 SUBMITTALS

Government approval is required for submittals with a "GA" designation; submittals having an "FIO" designation are for information only. The following shall be submitted in accordance with Section 01330 SUBMITTAL PROCEDURES:

SD-01 Data

Glass; FIO. Glazing Accessories; FIO.

Manufacturer's descriptive product data, handling and storage recommendations, installation instructions, and cleaning instructions.

SD-13 Certificates

Glass; FIO.

Certificates stating that the glass meets the specified requirements. Labels or manufacturers marking affixed to the glass will be accepted in lieu of certificates.

1.3 DELIVERY, STORAGE AND HANDLING

Glazing compounds shall be delivered to the site in the manufacturer's unopened containers. Glass shall be stored indoors in a safe, well ventilated dry location in accordance with manufacturer's instructions, and shall not be unpacked until needed for installation. Glass shall not be stored on site over 1 month.

1.4 WARRANTY

Manufacturer shall warrant insulating glass to be free of fogging or film formation on the internal glass surfaces caused by failure of the hermetic seal for a period of 10 years from Date of Substantial Completion. Warranty shall be signed by manufacturer.

PART 2 PRODUCTS

2.1 FLOAT GLASS

2.1.1 Annealed Glass

Annealed glass shall be Type I transparent flat type, Class 1 - clear, Quality q3 - glazing select, conforming to ASTM C 1036.

2.2 ROLLED GLASS

2.2.1 Wired Glass

Wired glass shall be Type II flat type, Class 1 - translucent, Quality q8 - glazing, Form 1 - wired and polished both sides conforming to ASTM C 1036. Wire mesh shall be polished stainless steel Mesh 1 - diamond. Wired glass for fire-rated doors shall be tested as part of a door assembly in accordance with NFPA 252.

2.3 INSULATING GLASS

Insulating glass shall be Class A preassembled units of dual-seal construction consisting of lites of glass separated by an aluminum spacer and dehydrated space conforming to ASTM E 773 and ASTM E 774. Aluminum spacer shall be roll-formed, with bent or tightly soldered joints to completely seal the spacer periphery and eliminate moisture and hydrocarbon vapor transmission into airspace through the corners. Primary seal shall be compressed

polyisobutylene and the secondary seal shall be a specially formulated silicone. Glass types shall be as follows:

2.3.1 Clear Insulating Glass

Glass for two-pane insulating units shall be Type I annealed glass, Class 1 - clear, Quality q3 - glazing select, conforming to ASTM C 1036.

2.4 HEAT-TREATED GLASS

Heat-treated glass shall conform to the following requirements.

2.4.1 Tempered Glass

Tempered glass shall be kind FT fully tempered transparent flat type, Class 1-clear, Condition A uncoated surface, Quality q3 - glazing select, conforming to ASTM C 1048 and GANA-04. Color shall be clear.

2.5 GLAZING ACCESSORIES

2.5.1 Putty and Glazing Compound

Glazing compound shall conform to ASTM C 669 for glazing to metal. Putty shall be linseed oil type conforming to CID A-A-378 for face-glazing primed wood. Putty and glazing compounds shall not be used with insulating glass or laminated glass.

2.5.2 Setting and Edge Blocking

Neoprene setting blocks shall be dense extruded type conforming to ASTM D 395, Method B, Shore A durometer between 70 and 90. Edge blocking shall be Shore A durometer of 50 (+ or - 5). Profiles, lengths and locations shall be as required and recommended in writing by glass manufacturer.

PART 3 EXECUTION

3.1 PREPARATION

Detrimental materials shall be removed from glazing rabbet and glass surfaces and wiped dry with solvent. Glazing surfaces shall be dry and free of frost.

3.2 INSTALLATION

Glass and glazing work shall be performed in accordance with approved shop drawings, GANA-01, glass manufacturer's instructions and warranty requirements. Glass shall be installed with factory labels intact and removed only when instructed. Wired glass shall be installed in accordance with NFPA 80. Edges and corners shall not be ground, nipped or cut after leaving factory. Springing, forcing or twisting of units during installation will not be permitted.

3.3 CLEANING

Upon completion of project, outside surfaces of glass shall be washed clean and the inside surfaces of glass shall be washed and polished in accordance with glass manufacturer's recommendations.

3.4 PROTECTION

Glass work shall be protected immediately after installation. Glazed openings shall be identified with suitable warning tapes, cloth or paper flags, attached with non-staining adhesives. Glass units which are broken, chipped, cracked, abraded, or otherwise damaged during construction activities shall be removed and replaced with new units.

-- End of Section --

SECTION 09250

GYPSUM WALLBOARD

PART 1 GENERAL

1.1 REFERENCES

The publications listed below form a part of this specification to the extent referenced. The publications are referred to in the text by basic designation only.

AMERICAN SOCIETY FOR TESTING AND MATERIALS (ASTM)

ASTM A 580	(1995a) Stainless and Heat Resisting Steel Wire
ASTM A 853	(1993) Steel Wire, Carbon, for General Use
ASTM B 164	(1993) Nickel-Copper Alloy Rod, Bar, and Wire
ASTM C 36	(1995) Gypsum Wallboard
ASTM C 475	(1994) Joint Compound and Joint Tape for Finishing Gypsum Board
ASTM C 645	(1995) Non-Load (Axial) Bearing Steel Studs, Runners (Track), and Rigid Furring Channels for Screw Application of Gypsum Board
ASTM C 754	(1996) Installation of Steel Framing Members to Receive Screw-Attached Gypsum Board
ASTM C 840	(1996) Application and Finishing of Gypsum Board
ASTM C 955	(1995) Load-Bearing (Transverse and Axial) Steel Studs, Runners (Tracks), and Bracing or Bridging for Screw Application of Gypsum Board and Metal Plaster Bases
ASTM C 1002	(1996a) Steel Drill Screws for the Application of Gypsum Board or Metal Plaster Bases
ASTM C 1047	(1994) Accessories for Gypsum Wallboard and Gypsum Veneer Base

GYPSUM ASSOCIATION (GA)

GA 216	(1996) Application and Finishing of Gypsum Board
GA 600	(1994) Fire Resistance Design Manual

UNDERWRITERS LABORATORIES (UL)

UL-05	(1997) Fire Resistance Directory

1.2 SYSTEM DESCRIPTION

1.2.1 Fire-Rated Construction

Joints of fire-rated gypsum board enclosures shall be closed and sealed in accordance with UL test requirements or GA requirements. Penetrations through rated partitions and ceilings shall be sealed tight in accordance with tested systems. Fire ratings shall be as indicated.

1.3 SUBMITTALS

Government approval is required for submittals with a "GA" designation; submittals having an "FIO" designation are for information only. The following shall be submitted in accordance with Section 01330 SUBMITTAL PROCEDURES:

SD-04 Drawings

Steel Framing; FIO. Control Joints; FIO. Fire-Resistant Assemblies; FIO.

Drawings and installation details for ceiling framing, furring, special wall framing, and framed openings in walls and ceilings.

SD-13 Certificates

Gypsum Wallboard; FIO. Steel Framing; FIO. Fire-Rated Gypsum Board; FIO.

Certificates stating that the steel framing and gypsum wallboard meet the specified requirements.

1.4 QUALIFICATIONS

Manufacturer shall specialize in manufacturing the types of material specified and shall have a minimum of 5 years of documented successful experience. Installer shall specialize in the type of gypsum board work required and shall have a minimum of 3 years of documented successful experience.

1.5 DELIVERY, STORAGE AND HANDLING

Materials shall be delivered in original containers bearing the name of manufacturer, contents, and brand name. Materials shall be stored off the ground in a weathertight structure for protection. Gypsum boards shall be stacked flat, off floor and supported to prevent sagging and warpage. Adhesives and joint materials shall be stored in accordance with manufacturer's printed instructions. Damaged or deteriorated materials shall be removed from jobsite.

1.6 ENVIRONMENTAL CONDITIONS

Environmental conditions for application and finishing of gypsum board shall be in accordance with ASTM C 840. During the application of gypsum board a room temperature of not less than 40 degrees F shall be maintained. Building spaces shall be ventilated to remove water not required for drying joint treatment materials. Drafts shall be avoided during dry hot weather to prevent materials from drying too rapidly.

PART 2 MATERIALS

2.1 NON-LOADBEARING STUD WALLS

2.1.1 Studs

Studs for non-loadbearing walls shall conform to ASTM C 645. Studs shall be C-shaped, roll formed steel with minimum uncoated design thickness of 22 gauge (0.0299 in) made from G40 hot-dip galvanized coated sheet.

2.1.2 Runner Tracks

Floor and ceiling runner tracks shall conform to ASTM C 645. Tracks shall be prefabricated, U-shaped with minimum 1 inch flanges, unpunched web, thickness to match studs, made from G40 hot-dip galvanized coated sheet.

2.2 LOADBEARING STUD WALLS

2.2.1 Studs

Studs for loadbearing walls shall conform to ASTM C 955. Studs shall be C-shaped roll formed steel made from minimum G60 hot-dip galvanized coated sheet. Stud sizes and base metal design thickness and structural properties shall be as indicated on the structural drawings.

2.2.2 Runner Tracks

Floor and ceiling runner tracks shall conform to ASTM C 955. Runners shall be prefabricated, U-shaped with minimum 3/4 inch flanges, unpunched web, thickness to match studs, made from G60 hot-dip galvanized coated sheet.

2.2.3 Bridging

Bridging for loadbearing walls shall conform to ASTM C 955. Bridging shall be minimum 3/4 x 3/4 inch cold-rolled steel channel with weld attachment clips at each stud or V-bar type weld or screw attached to each stud flange. Bridging shall be adequate to provide lateral support for the stud.

2.3 SUSPENDED CEILING FRAMING

Carrying channels shall be formed from 16 gauge (0.0548 in) thick cold-rolled steel, 1-1/2 x 3/4 inch. Furring members shall be formed from cold-rolled steel, 7/8 x 2-9/16 inch x 20 gauge. Carrying channels and furring members shall be made from hot-dip galvanized coated sheet.

2.4 GYPSUM BOARD

Gypsum board shall have square-cut ends, tapered or beveled edges and shall be maximum possible length. Gypsum board thickness shall be as shown.

2.4.1 Standard Gypsum Board

Regular gypsum board shall conform to ASTM C 36, and shall be 48 inches wide.

2.4.2 Fire-Rated Gypsum Board

Fire-rated gypsum board shall conform to ASTM C 36, and shall be Type X or Type C as required, 48 inches wide.

2.4.3 Foil-Backed Gypsum Board

Foil-backed gypsum board shall conform to ASTM C 36, regular or Type X, 48 inches wide. Gypsum board shall have aluminum foil vapor retarder laminated to back surface.

2.4.4 Tile Backer Board

Tile backer board is specified in Section 09310 CERAMIC TILE.

2.5 TRIM, MOLDINGS, AND ACCESSORIES

2.5.1 Taping and Embedding Compound

Taping and embedding compound shall conform to ASTM C 475. Compound shall be specifically formulated and manufactured for use in embedding tape at gypsum wallboard joints and fastener heads, and shall be compatible with tape and substrate.

2.5.2 Finishing or Topping Compound

Finishing or topping compound shall conform to ASTM C 475. Compound shall be specifically formulated and manufactured for use as a finishing compound for gypsum board.

2.5.3 All-Purpose Compound

All-purpose compound shall be specifically formulated and manufactured to use as a taping and finishing compound, and shall be compatible with tape and substrate.

2.5.4 Joint Tape

Joint tape shall conform to ASTM C 475 and shall be as recommended by gypsum board manufacturer.

2.5.5 Trim, Control Joints, Beads, Stops and Nosings

Items used to protect edges, corners, and to provide architectural features shall be in accordance with ASTM C 1047.

2.6 FASTENINGS

2.6.1 Screws

Screws shall conform to ASTM C 1002. Screws shall be self-drilling and self-tapping steel, Type G for gypsum board to gypsum board and Type S for wood or light-gauge steel framing.

2.6.2 Hangers

Suspended ceiling runner channel hangers shall be soft, annealed steel wire not less than No. 8 SWG, conforming to ASTM A 853 or flat iron or steel straps, at least 3/32 x 7/8 inch size, coated with zinc, cadmium, or rust-inhibiting paint.

2.6.3 Wire and Clip Type Fastenings

Tie wire, clips, rings, and other fastenings shall be corrosion-resisting steel conforming to ASTM A 580, composition 302, 304, or 316, Condition A, or nickel-copper alloy conforming to ASTM B 164, annealed condition.

2.6.3.1 Clips

Clips used in lieu of tie wire for securing furring channels to runner channels in ceiling construction shall be made from strip not less than 1/8 inch thick or shall be hairpin clip, formed of wire not less than 0.01620 inch nominal diameter. Other clips and rings or fastenings of similar materials shall be equivalent in holding power to that provided by tie wire for the specific application.

PART 3 EXECUTION

3.1 INTERIOR WALL FRAMING

Steel framing and furring members shall be installed in accordance with ASTM C 754. Members shall be in alignment with spacings not to exceed the maximum spacings indicated on drawings. Runners shall be aligned accurately at the floor and ceiling and securely anchored.

3.1.1 Wall Openings

The framing system shall provide for the installation and anchorage of the required subframes or finish frames for wall openings at doors, pass-through openings, and access panels. Studs at openings shall be 20 gauge (0.0359 in) minimum bare metal thickness and spot grouted at jamb anchor inserts. Double studs shall be fastened together with screws and secured to floor and overhead runners. Two studs placed back-to-back shall be used for framing doors.

3.1.2 Wall Control Joints

Control joints in the walls and furring shall be constructed with double framing members installed 1/2 inch apart. Control joints shall be installed at masonry control joints and at other locations indicated on the drawings.

3.2 SUSPENDED CEILING FRAMING

Suspended ceiling system framing shall be installed in accordance with ASTM C 754.

3.2.1 Hangers

Hangers shall be spaced not more than 48 inches along runner channels and 36 inches in the other direction or 42 inches in both directions unless otherwise indicated. Locations of hanger wires shall be coordinated with other work. Hangers at ends of runner channels shall be located not more than 6 inches

from wall. Hanger wire shall be looped around bottom chord of open-web steel joists, or secured to structural elements with suitable fasteners. Sags or twists which develop in the suspended system shall be adjusted. Damaged or faulty parts shall be replaced.

3.2.2 Main Runners

Main runner channels shall be spaced at 48 inch maximum centers and installed in accordance with ASTM C 754. Hanger wires shall be double strand saddle-tied to runner channels and the ends of hanger wire shall be twisted three times around itself. Main runners shall be located to within 6 inches of the paralleling wall to support the ends of cross furring. Main runners shall not come in contact with abutting masonry or concrete walls. Where main runners are spliced, ends shall be overlapped 12 inches with flanges of channels interlocked, and shall be securely tied at each end of splice with wire looped twice around the channels.

3.2.3 Furring Channels

Furring channels shall be spaced at maximum centers of 16 inches and installed in accordance with ASTM C 754. Furring channels shall be secured to the runner channels and to structural supports at each crossing with tie wire, hairpin clips, or equivalent fastenings. Furring channels shall be located within 2 inches of parallel walls and beams, and shall be cut 1/2 inch short of abutting walls.

3.2.4 Ceiling Openings

Support members shall be provided as required at ceiling openings for access panels, recessed light fixtures, and air supply or exhaust. Support members shall be not less than 1-1/2 inch main runner channels and vertically installed suspension wires or straps shall be located to provide at least the minimum support specified herein for furring and wallboard attachment. Intermediate structural members not a part of the structural system, shall be provided for attachment or suspension of support members.

3.2.5 Light Fixtures

Light fixtures shall not be supported directly from suspended ceiling runners. Hanger wires for recessed or surface mounted light fixtures shall be anchored to structure at four corners of light fixtures, and additional wires shall be provided at appropriate locations to carry the weight of light fixtures.

3.2.6 Control Joints

Ceiling control joints for expansion and contraction shall be located where indicated on drawings.

3.3 APPLICATION OF GYPSUM BOARD

Gypsum board shall be installed in accordance with ASTM C 840 and GA 216 and as specified. Edges and ends of gypsum boards shall be cut to obtain neat fitting joints. End joints of adjoining boards shall be staggered, and shall be staggered on opposite sides of wall. Boards shall be applied with moderate contact without forcing in place. Holes for pipes, fixtures or other small openings shall be cut with a tool which will provide a neat fit. Screws shall be driven so that the heads are slightly below the plane of paper face.

Fracturing the paper face or damaging the core shall be avoided. Trim shall be installed at external and internal angles formed by the intersecting gypsum board surfaces with other surfaces. Corner beads shall be installed to vertical and horizontal corners in accordance with manufacturer's published instructions.

3.3.1 Foil-Backed Gypsum Board

Foil-backed gypsum board shall be placed with reflective surface against framing members.

3.4 TRIM, MOLDINGS, AND ACCESSORIES INSTALLATION

Trim, moldings and accessories shall be installed in accordance with GA 216.

3.5 TAPING AND FINISHING

Gypsum board taping and finishing shall be performed in accordance with ASTM C 840. Boards shall be kept free of dirt, oil and other foreign matter that could cause a lack of bond. Screw heads, dents, gouges, and cut-outs shall be filled with joint compound and sanded. Accessories at exposed joints, edges, corners, openings, and similar locations shall be taped, floated with joint compound, and sanded to produce surfaces ready for gypsum board finishes.

3.6 FIRE-RESISTANT ASSEMBLIES

Gypsum wallboard construction for fire-rated assemblies shall be in accordance with UL-05, or GA 600 for the design number indicated on drawings.

3.7 PATCHING

Surface defects and damage shall be corrected as required to leave gypsum board smooth, uniform in appearance, and ready to receive finish as specified.

-- End of Section --

SECTION 09310

CERAMIC TILE

PART 1 GENERAL

1.1 REFERENCES

The publications listed below form a part of this specification to the extent referenced. The publications are referred to in the text by basic designation only.

AMERICAN NATIONAL STANDARDS INSTITUTE (ANSI)

ANSI A108.1A	(1992) Installation of Ceramic Tile in the Wet-Set Method, with Portland Cement Mortar
ANSI A108.1B	(1992) Installation of Ceramic Tile on a Cured Portland Cement Mortar Setting Bed with Dry-Set or Latex Portland Cement Mortar
ANSI A108.5	(1992) Installation of Ceramic Tile with Dry-Set Portland Cement Mortar or Latex-Portland Cement Mortar
ANSI A108.6	(1992) Installation of Ceramic Tile with Chemical Resistant, Water Cleanable Tile-Setting and Grouting Epoxy
ANSI A108.8	(1992) Installation of Ceramic Tile with Chemical Resistant Furan Mortar and Grout
ANSI A108.11	(1992) Interior Installation of Cementitious Backup Units
ANSI A118.1	(1992) Dry-Set Portland Cement Mortar
ANSI A118.3	(1992) Chemical Resistant, Water Cleanable Tile Setting and Grouting Epoxy and Water Cleanable Tile Setting Epoxy Adhesive
ANSI A118.4	(1992) Latex-Portland Cement Mortar
ANSI A118.6	(1992) Ceramic Tile Grouts
ANSI A118.9	(1992) Test Methods and Specifications for Cementitious Backer Units
ANSI A137.1	(1988) Ceramic Tile

AMERICAN SOCIETY FOR TESTING AND MATERIALS (ASTM)

ASTM A 185	(1994) Steel Welded Wire Fabric, Plain, for Concrete Reinforcement
ASTM C 33	(1993) Concrete Aggregates

ASTM C 144	(1993) Aggregate for Masonry Mortar
ASTM C 150	(1996) Portland Cement
ASTM C 206	(1984; R 1992) Finishing Hydrated Lime
ASTM C 207	(1991; R 1992) Hydrated Lime for Masonry Purposes
ASTM C 241	(1990) Abrasion Resistance of Stone Subjected to Foot Traffic
ASTM C 373	(1988; R 1994) Water Absorption, Bulk Density, Apparent Porosity, and Apparent Specific Gravity of Fired Whiteware Products
ASTM C 648	(1984; R 1994) Breaking Strength of Ceramic Tile
ASTM C 847	(1995) Metal Lath
ASTM C 1026	(1987; R 1992) Measuring the Resistance of Ceramic Tile to Freeze-Thaw Cycling
ASTM C 1027	(1984; R 1990) Determining Visible Abrasion Resistance of Glazed Ceramic Tile
ASTM C 1028	(1989) Determining the Static Coefficient of Friction of Ceramic Tile and Other Like Surfaces by the Horizontal Dynamometer Pull-Meter Method

MARBLE INSTITUTE OF AMERICA (MIA)

MIA-01	(1991) Design Manual IV Dimensional Stone

TILE COUNCIL OF AMERICA (TCA)

TCA-01	(1995) Handbook for Ceramic Tile Installation

1.2 SUBMITTALS

Government approval is required for submittals with a "GA" designation; submittals having an "FIO" designation are for information only. The following shall be submitted in accordance with Section 01330 SUBMITTAL PROCEDURES:

SD-01 Data

Tile; FIO. Setting-Bed; FIO. Mortar, Grout, and Adhesive; FIO.

Manufacturer's catalog data.

SD-06 Instructions

Tile; FIO. Mortar and Grout; FIO.

Manufacturers preprinted installation and cleaning instructions.

SD-13 Certificates

Tile; FIO. Mortar, Grout, and Adhesive; FIO.

Certificates indicating conformance with specified requirements. A master grade certificate shall be furnished for tile.

SD-14 Samples

Tile; GA. Accessories; GA. Marble Thresholds; GA.

Samples of sufficient size to show color range, pattern, type and joints.

1.3 DELIVERY AND STORAGE

Materials shall be delivered to the project site in manufacturer's original unopened containers with seals unbroken and labels and hallmarks intact. Materials shall be kept dry, protected from weather, and stored under cover.

1.4 ENVIRONMENTAL REQUIREMENTS

Ceramic tile work shall not be performed unless the substrate and ambient temperature is at least 50 degrees F and rising. Temperature shall be maintained above 50 degrees F while the work is being performed and for at least 7 days after completion of the work. When temporary heaters are used they shall be vented to the outside to avoid carbon dioxide damage to new tilework.

1.5 WARRANTY

Manufacturer's standard performance guarantees or warranties that extend beyond a 1-year period shall be provided.

PART 2 PRODUCTS

2.1 TILE

Tile shall be standard grade conforming to ANSI A137.1. Containers shall be grade sealed. Seals shall be marked to correspond with the marks on the signed master grade certificate. Tile shall be impact resistant with a minimum breaking strength for wall tile of 90 lbs and 250 lbs for floor tile in accordance with ASTM C 648. Tile for cold climate projects shall be rated frost resistant by the manufacturer as determined by ASTM C 1026. Water absorption shall be 0.5 maximum percent in accordance with ASTM C 373. Floor tile shall have a minimum static coefficient of friction of 0.5 in accordance with ASTM C 1028. Tile shall be Class III as rated by the manufacturer when tested in accordance with ASTM C 1027 for abrasion resistance as related to foot traffic.

2.1.1 Mosaic Tile

Ceramic mosaic tile and trim shall be unglazed natural clay. Tile size shall be 1 x 1 inch. Color shall be in accordance with Section 09915 COLOR SCHEDULE. Tile may be furnished in pre-grouted sheets.

2.1.2 Quarry Tile

Quarry tile and trim shall be unglazed with abrasive surface. Tile shall be 6 x 6 x 1/2 inch. Color shall be in accordance with Section 09915 COLOR SCHEDULE.

2.1.3 Glazed Wall Tile

Glazed wall tile and trim shall be cushion edged with matte glaze. Tile shall be 4-1/4 x 4-1/4 inches. Color shall be in accordance with Section 09915 COLOR SCHEDULE. Tile may be provided in pre-grouted sheets.

2.2 SETTING-BED

The setting-bed shall be composed of the following:

2.2.1 Aggregate for Concrete Fill

Aggregate shall conform to ASTM C 33. Maximum size of coarse aggregate shall not be greater than one-half the thickness of concrete fill.

2.2.2 Portland Cement

Cement shall conform to ASTM C 150, Type I, white for wall mortar and gray for other uses.

2.2.3 Sand

Sand shall conform to ASTM C 144.

2.2.4 Hydrated Lime

Hydrated lime shall conform to ASTM C 206, Type S or ASTM C 207, Type S.

2.2.5 Metal Lath

Metal lath shall be flat expanded type conforming to ASTM C 847, and weighing not less than 2.5 pounds per square yard.

2.2.6 Reinforcing Wire Fabric

Wire fabric shall conform to ASTM A 185. Wire shall be either 2 x 2 inch mesh, 16/16 wire or 1-1/2 x 2 inch mesh, 16/13 wire.

2.3 WATER

Water shall be potable.

2.4 MORTAR, GROUT, AND ADHESIVE

Mortar, grout, and adhesive shall conform to the following:

2.4.1 Dry-Set Portland Cement Mortar

ANSI A118.1.

2.4.2 Latex-Portland Cement Mortar

ANSI A118.4.

2.4.3 Grout for Wall Tile

ANSI A118.6; silicone rubber grout.

2.4.4 Grout for Floor Tile

Epoxy resin grout complying with ANSI A118.3.

2.4.5 Cementitious Backer Board

Cementitious backer units shall comply with ANSI A118.9.

2.5 MARBLE THRESHOLDS

Marble thresholds shall be of size required by drawings or conditions. Marble shall be Group A as classified by MIA-01. Marble shall have a fine sand-rubbed finish and shall be gray in color. Marble abrasion shall be not less than 12.0 when tested in accordance with ASTM C 241.

PART 3 EXECUTION

3.1 PREPARATORY WORK AND WORKMANSHIP

Surface to receive tile shall be inspected and shall conform to the requirements of ANSI A108.1A or ANSI A108.1B for surface conditions for the type setting bed specified and for workmanship. Variations of surface to be tiled shall fall within maximum values shown below:

TYPE	WALLS	FLOORS
Dry-Set Mortar	1/8 inch in 8 ft.	1/8 inch in 10 ft.
Organic Adhesives	1/8 inch in 8 ft.	1/16 inch in 3 ft.
Latex portland cement mortar	1/8 inch in 8 ft.	1/8 inch in 10 ft.
Epoxy	1/8 inch in 8 ft.	1/8 inch in 10 ft.

3.2 GENERAL INSTALLATION REQUIREMENTS

Tile work shall not be started until roughing in for mechanical and electrical work has been completed and tested, and built-in items requiring membrane waterproofing have been installed and tested. Floor tile installation shall not be started in spaces requiring wall tile until after wall tile has been installed. Tile in colors and patterns indicated shall be applied in the area shown on the drawings. Tile shall be installed with the respective surfaces in true even planes to the elevations and grades shown. Special shapes shall be provided as required for sills, jambs, recesses, offsets, external corners, and other conditions to provide a complete and neatly finished installation. Tile bases and coves shall be solidly backed with mortar.

3.3 INSTALLATION OF WALL TILE

Wall tile shall be installed in accordance with the TCA-01, method W244 in showers and method W243 at all other walls.

3.3.1 Cementitious Backer Board

Cementitious backer units shall be installed in accordance with ANSI A108.11. Fasteners shall be type design for cement board application.

3.3.2 Setting Bed

Dry-set or latex-portland cement shall be used to install tile in accordance with ANSI A108.5.

3.3.3 Grout

Grout installation shall conform to ANSI A108.8.

3.4 INSTALLATION OF FLOOR TILE

Floor tile shall be installed in accordance with TCA-01, method F112.

3.4.1 Workable or Cured Mortar Bed

Floor tile shall be installed over a workable mortar bed or a cured mortar bed at the option of the Contractor. Workable mortar bed materials and installation shall conform to ANSI A108.1A. Cured mortar bed and materials shall conform to ANSI A108.1B. Joints between quarry tile shall be between 1/4 inch and 3/8 inch in width and shall be uniform in width.

3.4.2 Dry-Set and Latex-Portland Cement

Dry-set or latex-portland cement mortar shall be used to install tile directly over cured mortar beds in accordance with ANSI A108.5.

3.4.3 Resinous Grout

Quarry tile shall be grouted with epoxy resin grout. Joints shall be raked and cleaned to the full depth of the tile and neutralized when recommended by the resin manufacturer. Epoxy resin grout shall be installed in conformance with ANSI A108.6. Installation of resin grout shall be in strict accordance with manufacturer's instructions for proportioning, mixing, installing, and curing. Recommended temperature shall be maintained in the area and on the surface to be grouted. After grouting, tile shall be left free of grout stain.

3.4.4 Concrete Fill

Concrete fill shall be composed by volume of 1 part portland cement to 3 parts fine aggregate to 4 parts coarse aggregate, and mixed with water to as dry a consistency as practicable. The fill shall be spread, tamped, and screeded to a true plane, and pitched to drains or leveled as shown. Concrete fill shall be thoroughly damp cured before application of setting-bed material . Concrete fill shall be reinforced with one layer of reinforcement, with the uncut edges lapped the width of one mesh and the cut ends and edges lapped not less than 2 inches. Laps shall be tied together with 18 gauge wire every 10 inches along the finished edges and every 6 inches along the cut ends and edges. The reinforcement shall be supported and secured in the centers of concrete fills. The mesh shall be continuous; except where expansion joints occur, mesh shall be cut and discontinued across such joints. Reinforced concrete fill shall be provided under the setting-bed where the distance

between the under-floor surface and the finished tile floor surface is 2 inches or greater, and shall be of such thickness that the mortar setting-bed over the concrete fill shall be not less than 3/4 inch nor more than 1-1/4 inches thick at any point.

3.5 INSTALLATION OF MARBLE THRESHOLDS

Thresholds shall be installed where indicated in a manner similar to that of the ceramic tile floor. Thresholds shall be the full width of the opening. Head joints at ends shall not exceed 1/4 inch in width and shall be grouted full as specified for ceramic tile.

3.6 CLEANING AND PROTECTING

Upon completion, tile surfaces shall be thoroughly cleaned in accordance with manufacturer's approved cleaning instructions. Acid shall not be used for cleaning glazed tile. Floor tile with resinous grout or with factory mixed grout shall be cleaned in accordance with instructions of the grout manufacturer. After the grout has set, tile wall surfaces shall be given a protective coat of a noncorrosive soap or other approved method of protection. Tiled floor areas shall be covered with building paper before foot traffic is permitted over the finished tile floors. Board walkways shall be laid on tiled floors that are to be continuously used as passageways by workmen. Damaged or defective tiles shall be replaced.

-- End of Section --

SECTION 09445

RESINOUS TERRAZZO FLOORING

PART 1 GENERAL

1.1 REFERENCES

The publications listed below form a part of this specification to the extent referenced. The publications are referred to in the text by basic designation only.

AMERICAN SOCIETY FOR TESTING AND MATERIALS (ASTM)

ASTM D 56 (1993) flash Point by Tag Closed Tester

NATIONAL TERRAZZO & MOSAIC ASSOCIATION (NTMA)

NTMA-01 (1995) Terrazzo Information Guide

1.2 GENERAL

Resinous terrazzo flooring in the colors indicated shall be applied in the areas shown. Flooring shall be an epoxy terrazzo system that conforms to the requirements specified in paragraphs 2.01A and B of NTMA-01 or a polyester terrazzo flooring system that conforms to the requirements specified in paragraphs 2.01A and B of NTMA-01.

1.3 SUBMITTALS

Government approval is required for submittals with a "GA" designation; submittals having an "FIO" designation are for information only. The following shall be submitted in accordance with Section 01330 SUBMITTAL PROCEDURES:

SD-01 Data

Terrazzo Floor System; FIO. Mixing, Proportioning, and Installation; FIO. Cleaning and Sealing; FIO.

Resin manufacturer's descriptive data, mixing, proportioning, and installation instructions. Maintenance literature for terrazzo cleaning and sealing shall be included.

SD-04 Drawings

Terrazzo Floor System; FIO.

Drawings indicating the type, size, and layout of divider strips and control joint strips.

SD-13 Certificates

Terrazzo Floor System; FIO.

Certificates indicating conformance with specified requirements.

SD-14 Samples

Terrazzo Floor System; GA.

Two 6 by 6 inches, (minimum) samples of each color of resinous terrazzo and two 6 inches lengths, of each type of strip.

1.4 QUALIFICATION OF APPLICATOR

Applicator shall be approved by the resin manufacturer and shall have a minimum of 3 years experience in the application of the materials to be used and shall have completed 8 successful installations within the past 2 years.

1.5 DELIVERY AND STORAGE

Materials shall be delivered to the project site in manufacturer's original unopened containers. Materials shall be kept in a clean, dry, area with temperatures controlled between 50 to 90 degrees F.

1.6 ENVIRONMENTAL REQUIREMENTS

Areas to receive terrazzo shall be maintained at a temperature above 50 degrees F for 2 days prior to installation and for 7 days following installation.

PART 2 PRODUCTS

2.1 PRIMER

Primer shall be a material recommended by the resin manufacturer which will penetrate the pores of the substrate and bond with the topping to form a permanent monolithic bond between the substrate and the topping.

2.2 RESIN

Resin for the specified terrazzo flooring shall conform to the requirements shown in NTMA-01.

2.3 FILLERS

Fillers, if required, shall be inert mineral or cellulosic material as recommended by the manufacturer and best suited for the resin binder used. Fillers shall be furnished in the quantity necessary to impart the required color and physical characteristics.

2.4 MARBLE CHIPS

Marble chips shall be of domestic origin of sizes and colors to match NTMA-01 color plate indicated in Section 09915 COLOR SCHEDULE. Chips shall be a range of sizes up to and including the NTMA Standard No. 0 and Standard No. 1 for 1/4 in. thick floors and Standard No. 0 through Standard No. 2 for 3/8 in. thick floors.

2.5 STRIPS

2.5.1 Divider Strips

Divider strips shall be depth as required, and of brass or zinc.

2.6 GROUT

Grout shall be as recommended by the manufacturer of the resin.

2.7 SEALER

Sealer shall have a pH factor between 7 and 10 and shall be a penetrating type specially prepared for use on terrazzo. The sealer shall not discolor or amber the terrazzo and shall produce a slip resistant surface. Flash point of sealer shall be a minimum of 80 degrees F when tested in accordance with ASTM D 56.

PART 3 EXECUTION

3.1 PREPARATION OF CONCRETE SUBFLOOR

Installation of the floor topping shall not commence until the concrete substrate is at least 28 days old. The concrete surfaces shall be prepared in accordance with the instructions of the resin manufacturer.

3.2 MIXING, PROPORTIONING, AND INSTALLATION

Mixing, proportioning, and installing shall be in accordance with the approved instructions of the manufacturer. Strips shall be installed in locations indicated. The topping shall be applied to give a finish thickness of 1/4 in. Bases shall be cove type cast-in-place with 1 inch radius cove and shall be 4 in. high at toilet rooms and 6 inches high at showers.

3.3 CLEANING AND SEALING

The terrazzo shall be washed with a neutral cleaner and where required shall be cleaned with a fine abrasive to remove any stains or cement smears. The cleaned surfaces shall be rinsed. When dry, a terrazzo sealer shall be applied in accordance with the manufacturer's directions.

3.4 PROTECTION

The terrazzo work shall be covered and protected from damage until completion of the work of all other trades.

-- End of Section --

SECTION 09650

RESILIENT FLOORING

PART 1 GENERAL

1.1 REFERENCES

The publications listed below form a part of this specification to the extent referenced. The publications are referred to in the text by basic designation only.

AMERICAN SOCIETY FOR TESTING AND MATERIALS (ASTM)

ASTM D 4078	(1992) Water Emulsion Floor Polish
ASTM F 1066	(1995a) Vinyl Composition Floor Tile
ASTM F 1344	(1993) Rubber Floor Tile

1.2 SUBMITTALS

Government approval is required for submittals with a "GA" designation; submittals having an "FIO" designation are for information only. The following shall be submitted in accordance with Section 01330 SUBMITTAL PROCEDURES:

SD-01 Data

Resilient Flooring and Accessories; FIO.

Manufacturer's descriptive data and installation instructions including cleaning and maintenance instructions.

SD-14 Samples

Resilient Flooring and Accessories; GA.

Three samples of each indicated color and type of flooring and base. Sample size shall be minimum 2-1/2 by 4 inches.

1.3 DELIVERY AND STORAGE

Materials shall be delivered to the building site in original unopened containers bearing the manufacturer's name, project identification, and handling instructions. Materials shall be stored in a clean dry area with temperature maintained above 70 degrees F for 2 days prior to installation, and shall be stacked according to manufacturer's recommendations. Materials shall be protected from the direct flow of heat from hot-air registers, radiators and other heating fixtures and appliances.

1.4 ENVIRONMENTAL REQUIREMENTS

Areas to receive resilient flooring shall be maintained at a temperature above 70 degrees F and below 100 degrees F for 2 days before application, during application and 2 days after application. A minimum temperature of 55 degrees F shall be maintained thereafter.

1.5 SCHEDULING

Resilient flooring application shall be scheduled after the completion of other work which would damage the finished surface of the flooring.

1.6 WARRANTY

Manufacturer's standard performance guarantees or warranties that extend beyond a one year period shall be provided.

1.7 EXTRA MATERIALS

Extra flooring material of each color and pattern shall be furnished at the rate of 20 tiles and 5 square feet of sheet flooring. Extra materials shall be from the same lot as those installed. Extra base material composed of 20 linear feet of each color shall be furnished.

PART 2 PRODUCTS

2.1 VINYL-COMPOSITION TILE

Vinyl-composition tile shall conform to ASTM F 1066, Class 2,(through pattern tile), Composition 1, asbestos-free, and shall be 12 inches square and 1/8 inch thick. Tile shall have the color and pattern uniformly distributed throughout the thickness of the tile. Flooring in any one continuous area shall be from the same lot and shall have the same shade and pattern.

2.2 RUBBER FLOORING

Rubber tile shall conform to ASTM F 1344 Class 1 homogeneous construction, Type A (solid color) 30 inches square. Surface shall be raised square minipastille studs with chamfered edges. Stud profile shall be low. Overall thickness shall be 1/8 inch thick.

2.3 RESILIENT BASE

Base shall be manufacturers standard rubber or vinyl, straight style (installed with carpet) and coved style (installed with flooring). Base shall be 4 inches high and a minimum 1/8 inch thick. Preformed outside corners shall be furnished.

2.4 TRANSITION STRIP

A vinyl or rubber transition strip tapered to meet abutting material shall be provided.

2.5 ADHESIVE

Adhesive for flooring and wall base shall be as recommended by the flooring manufacturer.

2.6 POLISH

Polish shall conform to ASTM D 4078.

2.7 CAULKING AND SEALANTS

Caulking and sealants shall be in accordance with Section 07900 JOINT SEALING.

2.8 MANUFACTURER'S COLOR AND TEXTURE

Color and texture shall be in accordance with Section 09915 COLOR SCHEDULE.

PART 3 EXECUTION

3.1 EXAMINATION/VERIFICATION OF CONDITIONS

The Contractor shall examine and verify that site conditions are in agreement with the design package and shall report all conditions that will prevent a proper installation. The Contractor shall not take any corrective action without written permission from the Government.

3.2 SURFACE PREPARATION

Flooring shall be in a smooth, true, level plane, except where indicated as sloped. Before any work under this section is begun, all defects such as rough or scaling concrete, low spots, high spots, and uneven surfaces shall have been corrected, and all damaged portions of concrete slabs shall have been repaired as recommended by the flooring manufacturer. Concrete curing compounds, other than the type that does not adversely affect adhesion, shall be entirely removed from the slabs. Paint, varnish, oils, release agents, sealers, waxers, and adhesives shall be removed, as recommended by the flooring manufacturer.

3.3 MOISTURE TEST

The suitability of the concrete subfloor for receiving the resilient flooring with regard to moisture content shall be determined by a moisture test as recommended by the flooring manufacturer.

3.4 INSTALLATION OF VINYL-COMPOSITION TILE

Tile flooring shall be installed with adhesive in accordance with the manufacturer's installation instructions. Tile lines and joints shall be kept square, symmetrical, tight, and even. Edge width shall vary as necessary to maintain full-size tiles in the field, but no edge tile shall be less than one-half the field tile size, except where irregular shaped rooms make it impossible. Flooring shall be cut to, and fitted around, all permanent fixtures, built-in furniture and cabinets, pipes, and outlets. Edge tile shall be cut, fitted, and scribed to walls and partitions after field flooring has been applied.

3.5 INSTALLATION OF RUBBER FLOORING

Rubber flooring shall be installed with adhesive in accordance with the manufacturer's written installation instructions. Lines and joints shall be kept square, symmetrical, tight, and even. Edge width shall vary as necessary to maintain full-size tiles in the field, but no edge pieces shall be less than one-half the field size, except where irregular shaped rooms make it impossible. Flooring shall be cut to, and fitted around, all permanent

fixtures, built-in furniture and cabinets, pipes, and outlets. Edges shall be cut, fitted, and scribed to walls and partitions after field flooring has been applied.

3.6 INSTALLATION OF EDGE STRIPS

Edge strips shall be secured with adhesive as recommended by the manufacturer. Edge strips shall be provided at locations where flooring termination is higher than the adjacent finished flooring and at other locations indicated on the drawings.

3.7 INSTALLATION OF BASE

Wall base shall be installed with adhesive in accordance with the manufacturer's written instructions. Base joints shall be tight and base shall be even with adjacent resilient flooring. Voids along the top edge of base at masonry walls shall be filled with caulk.

3.8 CLEANING

Immediately upon completion of installation of tile in a room or an area, flooring and adjacent surfaces shall be cleaned to remove all surplus adhesive. After installation, flooring shall be washed with a cleaning solution, rinsed thoroughly with clear cold water, and, except for raised pattern rubber flooring, rubber tile and sheet rubber flooring, rubber stair treads, and static control vinyl tile, given two coats of polish in accordance with manufacturers written instructions. After each polish coat, floors shall be buffed to an even luster with an electric polishing machine. Raised pattern rubber tile shall be cleaned and maintained as recommended by the manufacturer.

3.9 PROTECTION

From the time of laying until acceptance, flooring shall be protected from damage as recommended by the flooring manufacturer. Flooring which becomes damaged, loose, broken, or curled shall be removed and replaced.

-- End of Section --

SECTION 09680

CARPET

PART 1 GENERAL

1.1 REFERENCES

The publications listed below form a part of this specification to the extent referenced. The publications are referred to in the text by basic designation only.

AMERICAN ASSOCIATION OF TEXTILE CHEMISTS AND COLORISTS (AATCC)

AATCC TM-16	(1993) Test Method: Colorfastness to Light
AATCC TM-134	(1991) Test Method: Electrostatic Propensity of Carpets
AATCC TM-165	(1993) Test Method: Colorfastness to Crocking: Carpets - AATCC Crockmeter Method
AATCC TM-174	(1993) Test Method: Antimicrobial Activity Assessment of Carpet

AMERICAN SOCIETY FOR TESTING AND MATERIALS (ASTM)

ASTM D 418	(1993) Pile Yarn Floor Covering Construction
ASTM D 3278	(1989) Test Methods for Flash Point of Liquids by Setaflash Closed-Cup Apparatus

CARPET AND RUG INSTITUTE (CRI)

CRI 104	(1994) Commercial Carpet Installation Standard

CODE OF FEDERAL REGULATIONS (CFR)

16 CFR 1630	Standard for the Surface Flammability of Carpet and Rugs

1.2 SUBMITTALS

Government approval is required for submittals with a "GA" designation; submittals having an "FIO" designation are for information only. The following shall be submitted in accordance with Section 01330 SUBMITTAL PROCEDURES:

SD-01 Data

Carpet and Accessories; FIO.

Manufacturer's catalog data and printed documentation stating physical characteristics, durability, resistance to fading, and flame resistance characteristics for each type of carpet material and installation accessory.

SD-04 Drawings

Installation; FIO.

Drawings indicating areas receiving carpet, carpet types, textures and patterns, direction of pile, location of seams, and locations of edge molding.

SD-06 Instructions

Carpet and Accessories; FIO.

Manufacturer's printed installation instructions for the carpet, including preparation of substrate, seaming techniques, and recommended adhesives and tapes.

SD-14 Samples

Carpet and Accessories; GA.

a. Carpet: Three "Production Quality" samples 27 x 18 inches of each carpet proposed for use, showing quality, pattern, and color specified.

b. Vinyl Moldings: Three pieces of each type at least 12 inches long.

SD-19 Operation and Maintenance Manuals

Carpet and Accessories; FIO.

Two copies of carpet manufacturer's maintenance instructions describing recommended type of cleaning equipment and material, spotting and cleaning methods, and cleaning cycles.

1.3 REGULATORY REQUIREMENTS

Carpet and adhesives shall bear the Carpet and Rug Institute (CRI) Indoor Air Quality (IAQ) label. Carpet type bearing the label will indicate that the carpet has been tested and meets the criteria of the CRI IAQ Carpet Testing Program, and minimizes the impact on indoor air quality.

1.4 DELIVERY AND STORAGE

Materials shall be delivered to the site in the manufacturer's original wrappings and packages clearly labeled with the manufacturer's name, brand name, size, dye lot number, and related information. Materials shall be stored in a clean, dry, well ventilated area, protected from damage and soiling, and shall be maintained at a temperature above 60 degrees F for 2 days prior to installation.

1.5 ENVIRONMENTAL REQUIREMENTS

Areas in which carpeting is to be installed shall be maintained at a temperature above 60 degrees F for 2 days before installation, during installation, and for 2 days after installation. A minimum temperature of 55 degrees F shall be maintained thereafter for the duration of the contract. Traffic or movement of furniture or equipment in carpeted area shall not be

permitted for 24 hours after installation. Other work which would damage the carpet shall be completed prior to installation of carpet.

1.6 WARRANTY

Manufacturer's standard performance guarantees or warranties that extend beyond a one-year period shall be provided.

1.7 EXTRA MATERIAL

Extra material from same dye lot consisting of full width continuous broadloom shall be provided for future maintenance. A minimum of 4 square yards shall be provided.

PART 2 PRODUCTS

2.1 CARPET

Carpet shall be first quality; free of visual blemishes, streaks, poorly dyed areas, fuzzing of pile yarn, spots or stains, and other physical and manufacturing defects. Carpet materials and treatments shall be reasonably nonallergenic and free of other recognized health hazards. All grade carpets shall have a static control construction which gives adequate durability and performance.

2.1.1 Physical Characteristics

Carpet shall comply with the following:

a. Carpet Construction: Woven.

b. Type: Broadloom 12 feet minimum usable carpet width.

c. Pile Type: Patterned loop.

d. Pile Fiber: Commercial branded nylon continuous filament.

e. Pile or Wire Height: Minimum 0.187 inch in accordance with ASTM D 418.

f. Gauge or Pitch: Minimum 1/10 inch in accordance with ASTM D 418.

g. Stitches or Rows/Wires: Minimum 9.5 per square inch.

h. Finished Pile Yarn Weight: Minimum 28 ounces per square yard. This does not include weight of backings. Weight shall be determined in accordance with ASTM D 418.

i. Pile Density: Minimum 6900.

j. Dye Method: Solution dyed.

k. Backing Materials: Primary backing materials shall be polypropylene. Secondary backing to suit project requirements shall be those customarily used and accepted by the trade for each type of carpet, except when a special unitary back designed for gluedown is provided.

2.1.2 Performance Requirements

a. Static Control: Static control shall be provided to permanently control static buildup to less than 3.5 kV when tested at 20 percent relative humidity and 70 degrees F in accordance with AATCC TM-134.

b. Flammability and Critical Radiant Flux Requirements: Carpet shall comply with 16 CFR 1630.

c. Tuft Bind: Tuft bind force required to pull a tuft or loop free from carpet backing shall be a minimum 9 pound average force.

d. Additional Performance Characteristics:

(1) Antimicrobial: Nontoxic antimicrobial treatment in accordance with AATCC TM-174, Part I (qualitative), guaranteed by the carpet manufacturer to last the life of the carpet.

e. Colorfastness to Crocking: Dry and wet crocking shall comply with AATCC TM-165 and shall have a minimum rating of step 4 on the AATCC Color Transference Chart for all colors.

f. Colorfastness to Light: Colorfastness to light shall comply with AATCC TM-16 and shall have a minimum 4 grey scale rating after 40 hours.

g. Delamination Strength: Delamination strength for tufted carpet with a secondary back shall be minimum of 2.5 lb./inch.

2.2 ADHESIVES AND CONCRETE PRIMER

Adhesives and concrete primers for installation of carpet shall be waterproof, nonflammable, meet local air-quality standards, and shall be as recommended by the carpet manufacturer. Seam adhesive shall be waterproof, nonflammable, and nonstaining as recommended by the carpet manufacturer. Release adhesive for modular tile carpet shall be as recommended by the carpet manufacturer. Adhesives flashpoint shall be minimum 140 degrees F in accordance with ASTM D 3278.

2.3 MOLDING

Vinyl molding shall be heavy-duty and designed for the type of carpet being installed. Floor flange shall be a minimum 2 inches wide. Color shall be black.

2.4 TAPE

Tape for seams shall be as recommended by the carpet manufacturer for the type of seam used in installation.

2.5 COLOR, TEXTURE, AND PATTERN

Color, texture, and pattern shall be in accordance with Section 09915 COLOR SCHEDULE.

PART 3 EXECUTION

3.1 SURFACE PREPARATION

Carpet shall not be installed on surfaces that are unsuitable and will prevent a proper installation. Holes, cracks, depressions, or rough areas shall be repaired using material recommended by the carpet or adhesive manufacturer. Floor shall be free of any foreign materials and swept broom clean. Before beginning work, subfloor shall be tested with glue and carpet to determine "open time" and bond.

3.2 MOISTURE AND ALKALINITY TEST

Concrete slab shall be tested for moisture content and excessive alkalinity in accordance with CRI 104. The moisture content shall not exceed a hygrometer reading of 65 percent.

3.3 PREPARATION OF CONCRETE SUBFLOOR

Installation of the carpeting shall not commence until concrete substrate is at least 90 days old. The concrete surfaces shall be prepared in accordance with instructions of the carpet manufacturer. Type of concrete sealer, when required, shall be compatible with the carpet.

3.4 INSTALLATION

Installation shall be in accordance with the manufacturer's instructions and CRI 104. Edges of carpet meeting hard surface flooring shall be protected with molding. Installation shall be in accordance with the molding manufacturer's instructions.

3.4.1 Broadloom Installation

Broadloom carpet shall be installed direct glue down and shall be smooth, uniform, and secure, with a minimum of seams. Seams shall be uniform, unnoticeable, and treated with a seam adhesive. Side seams shall be run toward the light where practical and where such layout does not increase the number of seams. Breadths shall be installed parallel, with carpet pile in the same direction. Patterns shall be accurately matched. Cutouts shall be neatly cut and fitted securely. Seams at doorways shall be located parallel to and centered directly under doors. Seams shall not be made perpendicular to doors or at pivot points. Seams at changes in directions of corridors shall follow the wall line parallel to the carpet direction.

3.5 CLEANING AND PROTECTION

3.5.1 Cleaning

After installation of the carpet, debris, scraps, and other foreign matter shall be removed. Soiled spots and adhesive shall be removed from the face of the carpet with appropriate spot remover. Protruding face yarn shall be cut off and removed. Carpet shall be vacuumed clean.

3.5.2 Protection

The installed carpet shall be protected from soiling and damage with heavy, reinforced, nonstaining kraft paper, plywood, or hardboard sheets. Edges of

kraft paper protection shall be lapped and secured to provide a continuous cover. Traffic shall be restricted for at least 45 hours. Protective covering shall be removed when directed by the Contracting Officer.

3.6 REMNANTS

Remnants remaining from the installation, consisting of scrap pieces more than 2 feet in dimension with more than 6 square feet total, shall be provided. Non-retained scraps shall be removed from site.

-- End of Section --

SECTION 09900

PAINTING, GENERAL

PART 1 GENERAL

1.1 REFERENCES

The publications listed below form a part of this specification to the extent referenced. The publications are referred to in the text by basic designation only.

AMERICAN CONFERENCE OF GOVERNMENTAL INDUSTRIAL HYGIENISTS (ACGIH)

ACGIH-02	(1996) Threshold Limit Values for Chemical Substances and Physical Agents and Biological Exposure Indices

AMERICAN SOCIETY FOR TESTING AND MATERIALS (ASTM)

ASTM D 3273	(1994) Resistance to Growth of Mold on the Surface of Interior Coating in an Environmental Chamber
ASTM D 3274	(1995) Evaluating Degree of Surface Disfigurement of Paint Films by Microbial (Fungal or Algal) Growth or Soil and Dirt Accumulation
ASTM D 4214	(1989) Evaluating the Degree of Chalking of Exterior Paint Films
ASTM D 4258	(1988; R 1992) Surface Cleaning Concrete for Coating

COMMERCIAL ITEM DESCRIPTIONS (CID)

CID A-A-1500	(Rev A) Sealer, Surface (Latex Block Filler)

FEDERAL SPECIFICATIONS (FS)

FS TT-C-555	(Rev B; Am 1) Coating, Textured (for Interior and Exterior Masonry Surfaces)

STEEL STRUCTURES PAINTING COUNCIL (SSPC)

SSPC SP 1	(1982) Solvent Cleaning
SSPC SP 2	(1995) Hand Tool Cleaning
SSPC SP 3	(1995) Power Tool Cleaning

1.2 SUBMITTALS

Government approval is required for submittals with a "GA" designation; submittals having an "FIO" designation are for information only. The

following shall be submitted in accordance with Section 01330 SUBMITTAL PROCEDURES:

SD-01 Data

Paint; FIO.

The names, quantity represented, and intended use for the proprietary brands of materials proposed to be used.

SD-06 Instructions

Mixing and Thinning; FIO. Application; FIO.

Manufacturer's current printed product description, material safety data sheets (MSDS) and technical data sheets for each coating system. Detailed mixing, thinning and application instructions, minimum and maximum application temperature, and curing and drying times between coats for epoxy coatings. Detailed application instructions for textured coatings shall be provided.

SD-13 Certificates

Lead; FIO. Mildewcide and Insecticide; FIO. Volatile Organic Compound (VOC) Content; FIO.

Certificate stating that paints for interior use contain no mercurial mildewcide or insecticide. Certificate stating that paints proposed for use contain not more than 0.06 percent lead by weight of the total nonvolatile. Certificate stating that paints proposed for use meet Federal VOC regulations and those of the of the local Air Pollution Control Districts having jurisdiction over the geographical area in which the project is located.

1.3 PACKAGING, LABELING, AND STORING

Paints shall be in sealed containers that legibly show the designated name, formula or specification number, batch number, color, quantity, date of manufacture, manufacturer's formulation number, manufacturer's directions including any warnings and special precautions, and name of manufacturer. Pigmented paints shall be furnished in containers not larger than 5 gallons. Paints and thinner shall be stored in accordance with the manufacturer's written directions and as a minimum stored off the ground, under cover, with sufficient ventilation to prevent the buildup of flammable vapors and at temperatures between 40 and 95 degrees F.

1.4 ENVIRONMENTAL CONDITIONS

Unless otherwise recommended by the paint manufacturer, the ambient temperature shall be between 45 and 95 degrees F when applying coatings other than water-thinned and epoxy coatings. Water-thinned coatings shall be applied only when ambient temperature is between 50 and 90 degrees F. Epoxy coatings shall be applied only within the minimum and maximum temperatures recommended by the coating manufacturer.

1.5 SAFETY AND HEALTH

Work shall comply with applicable Federal, State, and local laws and regulations, and with the ACCIDENT PREVENTION PLAN, including the Activity

Hazard Analysis as specified in the CONTRACT CLAUSES. The Activity Hazard Analysis shall include analyses of the potential impact of painting operations on painting personnel and on others involved in and adjacent to the work zone.

1.5.1 Worker Exposures

Exposure of workers to hazardous chemical substances shall not exceed limits established by ACGIH-02, or as required by a more stringent applicable regulation.

1.5.2 Toxic Compounds

Toxic products having ineffective physiological warning properties, such as no or low odor or irritation levels, shall not be used unless approved by the Contracting Officer.

1.5.3 Training

Workers having access to an affected work area shall be informed of the contents of the applicable material data safety sheets (MDSS) and shall be informed of potential health and safety hazard and protective controls associated with materials used on the project. An affected work area is one which may receive mists and odors from the painting operations. Workers involved in preparation, painting and clean-up shall be trained in the safe handling and application, and the exposure limit, for each material which the worker will use in the project. Personnel having a need to use respirators and masks shall be instructed in the use and maintenance of such equipment.

1.5.4 Coordination

Work shall be coordinated to minimize exposure of building occupants, other Contractor personnel, and visitors to mists and odors from preparation, painting and clean-up operations.

PART 2 PRODUCTS

2.1 PAINT

The term "paint" as used herein includes emulsions, enamels, paints, stains, varnishes, sealers, cement-emulsion filler, and other coatings, whether used as prime, intermediate, or finish coat. Paint shall conform to the requirements listed in the painting schedules at the end of this section, except when the required amount of a material of a particular batch is 50 gallons or less, an approved first-line proprietary paint material with similar intended formulation, usage and color to that specified may be used. Additional requirements are as follows:

2.1.1 Colors and Tints

Colors shall be as selected from manufacturer's standard colors, as indicated. Manufacturer's standard color is for identification of color only. Tinting of epoxy and urethane paints shall be done by the manufacturer. Stains shall conform in shade to manufacturer's standard color. The color of the undercoats shall vary slightly from the color of the next coat.

2.1.2 Mildewcide and Insecticide

Paint specified for all coats applied to fabrics and vapor barrier jackets over insulation shall contain a mildewcide that will not adversely affect the color, texture, or durability of the coating. The mildewcide shall be incorporated into the paint by the manufacturer and shall attain a surface disfigurement rating of 8 or greater when tested in accordance with ASTM D 3273 and evaluated in accordance with ASTM D 3274. Mercurial mildewcide shall not be used in interior paint. Insecticides shall not be used in paint.

2.1.3 Lead

Paints containing lead in excess of 0.06 percent by weight of the total nonvolatile content (calculated as lead metal) shall not be used.

2.1.4 Chromium

Paints containing zinc chromate or strontium chromate pigments shall not be used.

2.1.5 Volatile Organic Compound (VOC) Content

Paints shall comply with applicable federal, state and local laws enacted to insure compliance with Federal Clean Air Standards and shall conform to the restrictions of the local air pollution control authority.

PART 3 EXECUTION

3.1 PROTECTION OF AREAS NOT TO BE PAINTED

Items not to be painted which are in contact with or adjacent to painted surfaces shall be removed or protected prior to surface preparation and painting operations. Items removed prior to painting shall be replaced when painting is completed. Following completion of painting, workmen skilled in the trades involved shall reinstall removed items. Surfaces contaminated by coating materials shall be restored to original condition.

3.2 SURFACE PREPARATION

Surfaces to be painted shall be clean and free of foreign matter before application of paint or surface treatments. Oil and grease shall be removed prior to mechanical cleaning. Cleaning shall be programmed so that dust and other contaminants will not fall on wet, newly painted surfaces. Exposed ferrous metals such as nail heads on or in contact with surfaces to be painted with water-thinned paints, shall be spot-primmed with a suitable corrosion-inhibitive primer capable of preventing flash rusting and compatible with the coating specified for the adjacent areas.

3.2.1 Concrete Masonry Surfaces

Concrete masonry surfaces shall be allowed to dry at least 30 days before painting. Surfaces shall be cleaned in accordance with ASTM D 4258. Glaze, efflorescence, laitance, dirt, grease, oil, asphalt, surface deposits of free iron and other foreign matter shall be removed prior to painting. Smooth surfaces to receive epoxy coatings shall be acid-etched or mechanically abraded as specified by the coating manufacturer, rinsed with water, allowed

to dry, and treated with the manufacturer's recommended conditioner prior to application of the first coat.

3.2.2 Ferrous Surfaces

Ferrous surfaces including those that have been shop-coated, shall be solvent-cleaned or detergent-washed in accordance with SSPC SP 1. Surfaces that contain loose rust, loose mill scale, and other foreign substances shall be cleaned mechanically with hand tools according to SSPC SP 2 or power tools according to SSPC SP 3. Shop-coated ferrous surfaces shall be protected from corrosion by treating and touching up corroded areas immediately upon detection.

3.2.3 Nonferrous Metallic Surfaces

Galvanized, aluminum and aluminum-alloy, lead, copper, and other nonferrous metal surfaces shall be solvent-cleaned or detergent-washed in accordance with SSPC SP 1.

3.2.4 Gypsum Board Surfaces

Gypsum board surfaces shall be dry and shall have all loose dirt and dust removed by brushing with a soft brush, rubbing with a cloth, or vacuum-cleaning prior to application of the first-coat material. A damp cloth or sponge may be used if paint will be water-based.

3.2.5 Mastic-Type Surfaces

Mastic-type surfaces shall be prepared by removing foreign material.

3.2.6 Wood Surfaces

Wood surfaces shall be cleaned of foreign matter. Moisture content of the wood shall not exceed 12 percent as measured by a moisture meter, unless otherwise authorized. Wood surfaces adjacent to surfaces to receive water-thinned paints shall be primed and/or touched up before applying water-thinned paints. Small, dry seasoned knots shall be scraped, cleaned, and given a thin coat of commercial knot sealer, before application of the priming coat. Pitch on large, open, unseasoned knots and all other beads or streaks of pitch shall be scraped off, or, if it is still soft, removed with mineral spirits or turpentine, and the resinous area shall be thinly coated with knot sealer. Finishing nails shall be set, and all holes and surface imperfections shall be primed. After priming, holes and imperfections in finish surfaces shall be filled with putty or plastic wood filler, colored to match the finish coat if natural finish is required, allowed to dry, and sanded smooth. Putty or wood filler shall be compatible with subsequent coatings.

3.2.6.1 Interior Wood Stain

Interior wood surfaces to receive stain shall be sanded. Oak and other open-grain wood to receive stain shall be given a coat of wood filler not less than 8 hours before the application of stain; excess filler shall be removed and the surface sanded smooth.

3.2.7 Previously Painted Surfaces

Previously painted surfaces damaged during construction shall be thoroughly cleaned of all grease, dirt, dust or other foreign matter. Blistering, cracking, flaking and peeling or other deteriorated coatings shall be removed. Slick surfaces shall be roughened. Damaged areas such as, but not limited to, nail holes, cracks, chips, and spalls shall be repaired with suitable material to match adjacent undamaged areas. Edges of chipped paint shall be feather edged and sanded smooth. Rusty metal surfaces shall be cleaned as per SSPC requirements. Solvent, mechanical, or chemical cleaning methods shall be used to provide surfaces suitable for painting. Chalk shall be removed so that when tested in accordance with ASTM D 4214, the chalk resistance rating is no less than 8. New, proposed coatings shall be compatible with existing coatings. If existing surfaces are glossy, the gloss shall be reduced.

3.3 MIXING AND THINNING

When thinning is approved as necessary to suit surface, temperature, weather conditions, or application methods, paints may be thinned in accordance with the manufacturer's directions. When thinning is allowed, paints shall be thinned immediately prior to application with not more than 1 pint of suitable thinner per gallon. The use of thinner shall not relieve the Contractor from obtaining complete hiding, full film thickness, or required gloss. Thinning shall not cause the paint to exceed limits on volatile organic compounds. Paints of different manufacturers shall not be mixed.

3.3.1 Cement-Emulsion Filler Coat

Cement and aggregate shall be dry-mixed so that uniform distribution and intermixing are obtained. Mixing liquid and one-half of the total amount of water shall be premixed and added gradually to the white portland cement and aggregate with constant stirring until a thick, smooth material is obtained. Emulsion paint shall then be added to the mixture and stirred until uniformity is obtained. The blend shall have a thick, creamy consistency. The remainder of the water shall be added if necessary to obtain a material with adequate application properties. Blending resin emulsion or emulsion paint with any other component shall be done with caution; too rapid an agitation will cause air entrapment and foaming.

3.3.2 Two-Component Systems

Two-component systems shall be mixed in accordance with manufacturer's instructions. Any thinning of the first coat to ensure proper penetration and sealing shall be as recommended by the manufacturer for each type of substrate.

3.4 APPLICATION

Painting practices shall comply with applicable federal, state and local laws enacted to insure compliance with Federal Clean Air Standards. Unless otherwise specified or recommended by the paint manufacturer, paint may be applied by brush, roller, or spray. At the time of application, paint shall show no signs of deterioration. Uniform suspension of pigments shall be maintained during application. Each coat of paint shall be applied so dry film shall be of uniform thickness and free from runs, drops, ridges, waves, pinholes or other voids, laps, brush marks, and variations in color, texture, and finish. Hiding shall be complete. Rollers for applying paints and

enamels shall be of a type designed for the coating to be applied and the surface to be coated. Special attention shall be given to insure that all edges, corners, crevices, welds, and rivets receive a film thickness equal to that of adjacent painted surfaces. Paints, except water-thinned types, shall be applied only to surfaces that are completely free of moisture as determined by sight or touch.

3.4.1 Ventilation

Affected areas shall be ventilated during paint application so that workers exposure to chemical substances shall not exceed limits as established by ACGIH-02, or as required by a more stringent applicable regulation. Interior work zones having a volume of 10,000 cubic feet or less shall be ventilated at a minimum of 2 air exchanges per hour. Ventilation in larger work zones shall be maintained by means of mechanical exhaust. Solvent vapors shall be exhausted outdoors, away from air intakes and workers. Return air inlets in the work zone shall be temporarily sealed before start of work until the coatings have dried.

3.4.2 Respirators

Operators and personnel in the vicinity of operating paint sprayers shall wear respirators.

3.4.3 First Coat

The first coat on CMU, gypsum wallboard, and other absorptive surfaces shall include repeated touching up of suction spots or overall application of primer or sealer to produce uniform color and gloss. Excess sealer shall be wiped off after each application. The first coat on both faces of wood doors shall be applied at essentially the same time. Glazed doors and sashes shall be given the specified coating system within 3 weeks of the time they are glazed, but not before the glazing material has set; paint shall overlay glass about 70 mils all around. Each varnish coat shall be sanded lightly prior to application of subsequent coats.

3.4.4 Timing

Surfaces that have been cleaned, pretreated, and otherwise prepared for painting shall be given a coat of the specified first coat as soon as practical after such pretreatment has been completed, but prior to any deterioration of the prepared surface. Sufficient time shall elapse between successive coats to permit proper drying. This period shall be modified as necessary to suit weather conditions. Oil-based or oleoresinous solvent-type paints shall be considered dry for recoating when the paint feels firm, does not deform or feel sticky under moderate pressure of the thumb, and the application of another coat of paint does not cause the undercoat to lift or lose adhesion. Manufacturer's instructions for application, curing and drying time between coats of two-component systems shall be followed.

3.4.5 Stains

Stain shall be applied at the rate specified in the manufacturer's printed directions. Oil-type stain shall be applied by brushing with the grain for the full length of the piece and immediately wiped to produce a uniform, transparent film with natural grain exposed.

3.4.6 Fillers

Concrete and masonry surface voids shall be filled; however, surface irregularities need not be completely filled. The dried filler shall be uniform and free of pinholes. Filler shall not be applied over caulking compound.

3.4.6.1 Cement-Emulsion Filler

Immediately before filler application, surfaces shall be dampened uniformly and thoroughly, with no free surface water visible, by several applications of potable water with a fog spray, allowing time between the sprayings for water to be absorbed. Cement-emulsion filler shall be scrubbed into the surface vigorously with a stiff-bristled brush having tampico or palmyra bristles not longer than 2-1/2 inches. At least 24 hours shall elapse before applying exterior emulsion paint over cement-emulsion filler. When the ambient temperature is over 85 degrees F, cement-emulsion filler surfaces shall be dampened lightly with a fog spray of potable water immediately prior to application of the subsequent paint coat.

3.4.6.2 Latex Filler

Latex filler, CID A-A-1500, may be used on interior surfaces only and shall be applied according to the manufacturer's instructions. Surface voids shall be filled and excess filler shall be removed from the surface with a rubber squeegee. The filler shall be allowed to dry the length of time specified by the manufacturer prior to applying successive coats of paint.

3.4.7 Textured Coating

Application of textured coating, FS TT-C-555, shall be as specified in the manufacturer's printed directions.

3.4.8 Ferrous-Metal Primer

Primer for ferrous-metal shall be applied to ferrous surfaces to receive paint other than asphalt varnish prior to deterioration of the prepared surface. The semitransparent film applied to some pipes and tubing at the mill is not to be considered a shop coat, but shall be overcoated with the specified ferrous-metal primer prior to application of finish coats.

3.5 PIPE COLOR CODE MARKING

Pipe color code marking is covered in Division 15. Preparation and application is covered in this section.

3.6 SURFACES TO BE PAINTED

Surfaces listed in the painting schedules at the end of this section, other than those listed in paragraph SURFACES NOT TO BE PAINTED, shall be painted as scheduled. Fire rating labels on doors and frames shall be protected during painting operation to prevent defacement. Do not remove rating labels.

3.7 SURFACES NOT TO BE PAINTED

Surfaces of hardware, fittings, and other factory finished items shall not be painted. Surfaces of exterior brick and cast stone shall not be painted.

3.8 CLEANING

Cloths, cotton waste and other debris that might constitute a fire hazard shall be placed in closed metal containers and removed at the end of each day. Upon completion of the work, staging, scaffolding, and containers shall be removed from the site or destroyed in an approved manner. Paint and other deposits on adjacent surfaces shall be removed and the entire job left clean and acceptable.

3.9 PAINTING SCHEDULE

The "PAINTING SCHEDULE" prescribes the surfaces to be painted, and the number and types of coats of paint required.

3.9.1 Manufacturers

The naming of manufacturers in the "PAINTING SCHEDULE" is not intended to limit competition among bidders but is intended to establish a standard of quality. Except where otherwise indicated, the use of brand names in the following schedule is not intended to express a preference for the named manufacturer, but is intended to establish the standard of quality required. Paint of equal or better quality with equal properties may be supplied by any of the following manufacturers.

(1) Sherwin-Williams
(2) PPG Industries
(3) Devoe & Raynolds
(4) Glidden
(5) Benjamin Moore
(6) Pratt & Lambert
(7) Tnemec Company, Inc.

3.9.2 Shop-Painted Items

Surfaces of items finish-painted by the manufacturer, or specified to be finish-painted under other sections of the specifications, are exempted from the requirements for surface preparation and painting. Shop-primed items shall receive surface preparation and finish painting as required by this section.

3.9.3 The following schedule of finishes is not intended to mention every particular item which will receive painter's finish, but is intended to establish the type and quality of finish which will be required on various materials.

3.9.4 Surface preparation designations indicated as SSPS are those of the Structural Steel Painting Council. Surface preparation designation indicated S-W are those of the Sherwin-Williams Company.

3.9.5 Paint System "1"

Used on all exterior and interior non-galvanized ferrous surfaces which are not factory pre-finished.

a. Finish type: Alkyd enamel.
b. Sheen: Gloss.

c. Application method: Brush or spray.
d. Surface preparation: SSPC SP 2 or SSPC SP 3 followed by SSPC SP 1.
e. Primer: One coat Sherwin-Williams series B50 metal primer to a minimum dry film thickness of 2.5 mils.
f. Finish: Two coats Sherwin-Williams series B55 Enamel to a minimum dry film thickness of 3.0 mils per coat.

3.9.6 Paint System "2":

Used on exterior concrete masonry surfaces which are exposed to view.

a. Finish type: Alkyd enamel.
b. Sheen: Gloss.
c. Application method: Brush or roller.
d. Surface preparation: S-W 3.
e. Filler: One coat cement emulsion filler.
f. Primer: One coat Sherwin-Williams series B46 Masonry Conditioner.
g. Finish: Two coats Sherwin-Williams series A2 Oil Base Paint to a minimum dry film thickness of 2.1 mils per coat.

3.9.7 Paint System "3"

Used on interior drywall surfaces where this Paint System is indicated by the Room Finish Schedule.

a. Finish type: Latex.
b. Sheen: Eggshell.
c. Application method: Brush or roller.
d. Surface preparation: S-W 8.
e. Primer: One coat Sherwin-Williams series B28 latex wall primer to a minimum dry film thickness of 1.1 mils.
f. Finish: Two coats Sherwin-Williams series B20W200 interior latex to a minimum dry film thickness of 1.6 mils per coat.

3.9.8 Paint System "4"

Used on interior concrete masonry surfaces where this Paint System is indicated by the Room Finish Schedule.

a. Finish type: Latex/alkyd.
b. Sheen: Eggshell.
c. Application method: Brush or roller.
d. Surface preparation: S-W 3.
e. Primer: One or more coats Sherwin-Williams series B25 block filler.
f. Finish: Two coats Sherwin-Williams series B33 interior alkyd to a minimum dry film thickness of 1.8 mils per coat.

3.9.9 Paint System "5"

Used on interior drywall surfaces where this Paint System is indicated by the Room Finish Schedule.

a. Finish type: Latex/alkyd.
b. Sheen: Gloss.
c. Application method: Brush or roller.
d. Surface preparation: S-W 8.

e. Primer: One coat Sherwin-Williams series B28 latex wall primer to a minimum dry film thickness of 1.1 mils.
f. Finish: Two coats Sherwin-Williams series B35W200 interior alkyd to a minimum dry film thickness of 1.6 mils per coat.

3.9.10 Paint System "6"

Used on drywall surfaces where this Paint System is indicated by the Room Finish Schedule.

a. Finish type: Water based epoxy.
b. Sheen: Gloss.
c. Application method: Brush or roller.
d. Surface preparation: S-W 8.
e. Primer: One coat Sherwin-Williams series B28 latex wall primer to a minimum dry film thickness of 1.1 mils.
f. Finish: Two coats Sherwin-Williams series B70 catalyzed epoxy to a minimum dry film thickness of 2.5 mils per coat.

3.9.11 Paint System "7"

Used on interior concrete masonry surfaces where this Paint System is indicated by the Room Finish Schedule.

a. Finish type: Water based epoxy.
b. Sheen: Gloss.
c. Application method: Brush or roller.
d. Surface preparation: S-W 3.
e. Primer: One or more coats Sherwin-Williams series B25 block filler.
f. Finish: Two coats Sherwin-Williams series B70 catalyzed epoxy to a minimum dry film thickness of 2.5 mils per coat.

3.9.12 Paint System "8"

Used on painted interior wood surfaces including painted doors.

a. Finish type: Alkyd.
b. Sheen: Semi-gloss.
d. Application method: Brush or spray.
e. Surface preparation: S-W 24.
f. Primer: One coat Sherwin-Williams series B49 enamel undercoater to a minimum dry film thickness of 1.9 mils.
g. Finish: Two coats Sherwin-Williams series B34 alkyd semi-gloss enamel to a minimum dry film thickness of 1.7 mils per coat.

3.9.13 Paint System "8"

Used on interior natural finished wood including natural finished wood doors.

a. Finish type: Alkyd / polyurethane.
b. Sheen: Satin.
c. Application method: Brush and rag.
d. Surface preparation: S-W 24.
e. Primer: One coat Sherwin-Williams seried A48 oil stain (wiped).

f. Finish: One coat Sherwin-Williams series A67 polyrethane varnish, gloss and One coat Sherwin-Williams series A67 polyrethane varnish, hand rubbed satin. Minimum dry film thickness of 1.7 mils per coat.

-- End of Section --

SECTION 09915

COLOR SCHEDULE

PART 1 GENERAL

1.1 REFERENCES

The publications listed below form a part of this specification to the extent referenced. The publications are referred to in the text by the basic designation only.

1.2 GENERAL

This section covers only the color of the exterior and interior materials and products that are exposed to view in the finished construction. The word "color" as used herein includes surface color and pattern. Requirements for quality and method of installation are covered in other appropriate sections of the specifications. Specific locations where the various materials are required are shown on the drawings. Items not designated for color in this section may be specified in other sections. When color is not designated for items, the Contractor shall propose a color for approval.

1.3 SUBMITTALS

Government approval is required for submittals with a "GA" designation; submittals having an "FIO" designation are for information only. The following shall be submitted in accordance with Section 01330 SUBMITTAL DESCRIPTIONS:

SD-14 Samples

Color board; GA.

Three sets of color boards, not less than 45 days after the Contractor is given Notice to proceed but before color selection is needed for any material submittal, complying with the following requirements:

a. Color boards shall reflect all actual finish textures, patterns, and colors required for this contract.

b. Materials shall be labeled with the finish type, manufacturer's name, pattern, and color reference.

c. Samples shall be on size 8-1/2 by 11 inch boards.

d. Samples for this color board are required in addition to samples requested in other specification sections.

e. Color boards shall be submitted to the Contracting Officer.

PART 2 PRODUCTS

2.1 REFERENCE TO MANUFACTURER'S COLOR

Where color is shown as being specific to one manufacturer, an equivalent color by another manufacturer may be submitted for approval. Manufacturers

and materials specified are not intended to limit the selection of equal colors from other manufacturers.

2.2 COLOR SCHEDULE

The color schedule lists the colors, patterns and textures required for exterior and interior finishes, including both factory applied and field applied colors.

2.2.1 Exterior Walls

Exterior wall colors shall apply to exterior wall surfaces including recesses at entrances and projecting vestibules. Conduit shall be painted to closely match the adjacent surface color. Wall color shall be provided to match the colors listed below.

a. Brick: Acme, #105, Golden Sunset.

b. Mortar: Natural Grey.

c. Paint on CMU: Match EIFS color.

f. Insulation and Finish System: Dryvit, Quartzputz, #109, Eggshell Cream.

g. Cast Stone: Light Buff.

h. Glass and Glazing: Clear.

2.2.2 Exterior Trim

Exterior trim shall be provided to match the colors listed below.

a. Windows, Doors and Door Frames: Anodized Dark Bronze.

b. Fascia: Match roof color (Terra Cotta).

c. Downspouts, Gutters, Louvers, and Flashings: Match roof color (Terra Cotta).

d. Soffits and Ceilings: White.

e. Caulking and Sealants: Match adjacent surface color as close as possible using standard colors of the manufacturer.

2.2.3 Exterior Roof

Roof color shall apply to exterior roof surfaces including sheet metal flashings and copings, mechanical units, roof trim, pipes, conduits, electrical appurtenances, and similar items. Roof color shall be provided to match the colors listed below.

a. Metal: Vincent Metals, ColorKlad, Terra Cotta.

2.2.4 Interior Finishes - Color Scheme 1 - Rooms 101, 102 and 116

Materials shall be provided to match the colors listed below.

a. Ceilings (Paint) - Rooms 102 and 116 only: Sherwin Williams, #SW 1004, Pure White.

b. Walls (Paint): Sherwin Williams, #SW 1093, Beige Sand.

c. Wainscot (Paint) - Room 101 only: Sherwin Williams, #SW 1097, Yorkshire Brown.

d. Base (Rubber) - Rooms 102 and 116 only: Roppe, #62, Mocha.

e. Base (Paint) - Room 101 only: Sherwin Williams, #SW 1096, Basic Brown.

2.2.5 Interior Finishes - Color Scheme 2 - Rooms 103 through 106, 109, 110, 113 through 115, and 117 through 119

Materials shall be provided to match the colors listed below.

a. Ceilings (Paint): Sherwin Williams, #SW 1004, Pure White.

b. Walls (Paint): Sherwin Williams, #SW 1095, Off White.

c. Walls (Vinyl Wall Fabric) - Rooms 103 through 106, 113 through 115, and 117 through 119 only: Koroseal Wallcoverings, Raphael, #H321-90, Misty.

d. Wainscot (Sisal) - Rooms 113, 115, 117 and 119 only: Design Materials #4233 (Blue in color).

e. Base (Rubber) - Rooms 113, 115 and 117 through 119 only: Roppe, #87, Blue.

f. Base (Rubber) - Rooms 105 through 106, 109, 110 and 114 only: Roppe, #89, Walnut.

g. Floors (VCT) - Rooms 115, and 117 through 119 only: Azrock, Cortina Complement, #V-787, Stratus.

h. Floors (VCT) - Rooms 109 and 110 only: Azrock, Aegean Stone, #AS-173, Clay Pot.

i. Floors (Rubber) - Room 116 only: Roppe, #89, Walnut.

j. Floors (Carpet) - Rooms 103 through 105 only: Mohawk, Woodwind, #WDE/808, Hazelnut.

k. Floors (Quarry Tile) - Rooms 113 and 114 only: Dal Quarry, #250, Galaxy Ironspot.

l. Doors (Paint): Sherwin Williams, #SW 1076, Caravelle Brown.

m. Door Frames (Paint): Sherwin Williams, #SW 1075, Earthenware.

n. Chair Rails (Vinyl) - Rooms 103 through 105, 113 and 115 only: Acrovyn Interiors, #190, Caisson.

o. Cabinets and Window Sills (Plastic Laminate): Nevamar, #FS-2-2T, Forest Landscape.

p. Countertops (Solid Surfacing): Corian, Sequoia.

2.2.6 Interior Finishes - Color Scheme 3 - Rooms 107, 108, 111 and 112

Materials shall be provided to match the colors listed below.

a. Ceilings (Paint): Sherwin Williams, #SW 1004, Pure White.

b. Walls (Paint): Sherwin Williams, #SW 1046, Stately White.

c. Walls (Ceramic Tile): Dal-Tile, #D-163, Innocent Blush.

d. Base (Rubber) - Rooms 107 and 111 only: Roppe, #89, Walnut.

e. Base and Floor (Terrazzo) - Rooms 108 and 112: The National Terrazzo and Mosaic Association, #S-363-4.

f. Floors (VCT) - Rooms 107 and 111 only: Azrock, Stone Granada, #SG-331, Pebble.

g. Doors (Paint): Sherwin Williams, #SW 1055, Truffle.

h. Door Frames (Paint): Sherwin Williams, #SW 1056, Baronial Brown.

i. Countertops (Solid Surfacing): Corian, Champagne.

PART 3 EXECUTION (Not Applicable)

-- End of Section --

SECTION 09950

WALLCOVERINGS

PART 1 GENERAL

1.1 REFERENCES

The publications listed below form a part of this specification to the extent referenced. The publications are referred to in the text by basic designation only.

AMERICAN SOCIETY FOR TESTING AND MATERIALS (ASTM)

ASTM E 84	(1996a) Surface Burning Characteristics of Building Materials
ASTM F 793	(1993) Standard Classification of Wallcovering by Durability Characteristics

1.2 SUBMITTALS

Government approval is required for submittals with a "GA" designation; submittals having an "FIO" designation are for information only. The following shall be submitted in accordance with Section 01330 SUBMITTAL PROCEDURES:

SD-01 Data

Wallcovering and Accessories; FIO.

Manufacturer's descriptive data, documentation stating physical characteristics, flame resistance, mildew and germicidal characteristics.

SD-06 Instructions

Installation; FIO.

Preprinted installation instructions for wallcovering and accessories.

Maintenance; FIO.

Preprinted cleaning and maintenance instructions for wallcovering and accessories.

SD-13 Certificates

Wallcovering; FIO.

Manufacturer's statement attesting that the product furnished meets or exceeds specification requirements. The statement must; be dated after the award of the contract, state Contractor's name and address, name the project and location, and list the requirements being certified.

SD-14 Samples

Wallcovering and Accessories; GA.

Samples of each indicated type, pattern, and color of wallcovering. Samples of wall covering shall be minimum 5 x 7 inches and of sufficient size to show pattern repeat.

1.3 DELIVERY AND STORAGE

Materials shall be delivered to the site in manufacturers original unopened containers labeled with manufacturers name, pattern, texture, size and related information. Materials shall be stored in accordance with the manufacturer's instructions in a clean dry ventilated area with temperature maintained above 60 degrees F for two days prior to installation.

1.4 ENVIRONMENTAL REQUIREMENTS

Areas to receive wallcovering shall be maintained at a temperature above 60 degrees F for 7 days before, during, and 7 days after application.

1.5 WARRANTY

Manufacturer's standard performance guarantees or warranties that extend beyond a one-year period shall be provided.

1.6 EXTRA MATERIALS

Extra material from the same dye lot consisting of 0.5 yards of full-width wallcovering for each 30 linear yards of wallcovering installed shall be provided for maintenance.

PART 2 PRODUCTS

2.1 WALLCOVERINGS

Wallcoverings shall be material designed specifically for the specified use. The wallcovering shall contain a non-mercury based mildewcide. The wallcovering shall be type made without the use of cadmium based stabilizers. Wallcovering shall have a Class A flame spread rating of 0-25 and smoke development rating of 0-50 when tested in accordance with ASTM E 84.

2.1.1 Wallcovering Type A

Wallcovering Type A shall be a vinyl coated woven or nonwoven fabric with germicidal additives and shall conform to ASTM F 793, Category V Type II, (13.1 to 24 ounces) total weight per square yard and width of 54 inches.

2.1.2 Wallcovering Type B

Wallcovering Type B shall be a woven natural sisal fiber without backing and shall be colorfast, stain, and soil resistant, reversible and flame retardant. Wallcovering shall meet or exceed the following:

a. Face fiber content: Natural sisal fibers.
b. Construction: Boucle weave.
c. Total weight: 53 ounces per square yard.

d. Width: 120 inches.
e. Flame spread rating: ASTM E 84, Class A.

2.2 WALL LINER

Wall liner shall be a non-woven polyester cellulose blend having a minimum weight of 3.7 ounces per square yard and a total minimum thickness of 0.013 inches. Wall liner shall have a Class A flame spread rating of 0-25 and smoke development rating of 0-50 when tested in accordance with ASTM E 84.

2.3 WAINSCOT CAP

Wainscot cap shall be integrally colored extruded vinyl about 1-1/4 inch high with a pinless metal track receiver. Configuration shall be similar to Mercer 940 standard T edge with 980 pinless metal track.

2.4 PRIMER AND ADHESIVE

Primer and adhesive shall be of a type recommended by the wallcovering manufacturer and shall contain a non-mercury based mildewcide. Adhesive shall be strippable type. Adhesive to install cap shall be of a type recommended by the manufacturer of the wainscot cap.

2.5 COLOR, TEXTURE, AND PATTERN

Color, texture, and pattern shall be in accordance with Section 09915 COLOR SCHEDULE.

PART 3 EXECUTION

3.1 EXAMINATION

Contractor shall inspect all areas and conditions under which wallcoverings are to be installed. Contractor shall notify in writing of any conditions detrimental to the proper and timely completion of the installation. Work will proceed only when conditions have been corrected and accepted by the installer.

3.2 SURFACE PREPARATION

Wallcovering shall not be applied to surfaces that are rough, that contain stains that will bleed through the wallcovering, or that are otherwise unsuitable for proper installation. Cracks and holes shall be filled and rough spots shall be sanded smooth. Surfaces to receive wallcovering shall be thoroughly dry. Interior surfaces of exterior masonry walls shall be sealed to prevent moisture penetration, then primed with a wallcovering primer in accordance with the manufacturer's instructions. Moisture content of plaster, concrete, and masonry shall be tested with an electric moisture meter and reading shall be not more than 5 percent. Masonry walls shall have flush joints. Concrete and masonry walls shall be coated with a thin coat of joint compound or cement plaster as a substrate preparation. To promote adequate adhesion of wall lining over masonry walls, the walls shall be primed as recommended by the wall lining manufacturer. Surface of walls shall be primed as required by manufacturer's instructions to permit ultimate removal of wallcovering from the wall surface. Primer shall be allowed to completely dry before adhesive application.

3.3 INSTALLATION

3.3.1 Wall Lining

Wall lining shall be installed over masonry walls that are to receive wallcovering. Lining shall be installed in accordance with the manufacturer's installation instructions. Lining shall be installed perpendicular to wallcovering to prevent overlapping of seams between lining and wallcovering.

3.3.2 Vinyl and Fabric Wallcovering

Wallcovering shall be installed in accordance with the manufacturer's installation instructions. Glue and adhesive spillage shall be immediately removed from wallcovering face and seams with a remover recommended by the manufacturer. After the installation is complete, the fabric wallcovering shall be vacuumed with a ceiling to floor motion.

3.3.3 Wainscot Cap

Wainscot cap shall be installed at the tops of all wainscot which occur on walls without a chair rail, and in accordance with the manufacturer's printed instructions.

3.4 CLEAN-UP

Upon completion of the work, wallcovering shall be left clean and free of dirt or soiling. Surplus materials, rubbish, and debris resulting from the wallcovering installation shall be removed and area shall be left clean.

-- End of Section --

SECTION 10100

MISCELLANEOUS ITEMS

PART 1 GENERAL

1.1 GENERAL REQUIREMENTS

Supplementary parts necessary to complete each item shall be included even though such work is not shown definitely or specified. The Contractor shall furnish to the proper trades, all anchors, sockets, or fastenings required for securing items to other construction. Details and specifications of items for which standard products are available, are representative guides of requirements for such items. Standard products, generally meeting such requirements, will be accepted, if details of construction and installation are approved by the Contracting Officer. Gages of sheet iron and steel specified are U.S. Standard for sheet and plate. Extruded section shall be at least 1/8-inch thick, unless otherwise specified or shown on the drawings.

1.2 SUBMITTALS

Government approval is required for submittals with a "GA" designation; submittals having an "FIO" designation are for information only. The following shall be submitted in accordance with Section 01330 SUBMITTAL PROCEDURES:

SD-01 Data

Tackboards; FIO. Fire Extinguishers and Cabinets; FIO.

Provide manufacturer's data substantiating that materials and fabrication comply with requirements indicated.

SD-04 Drawings

Tackboards; FIO.

Shop drawings shall include sections of typical trim members and dimensioned elevations. Show anchors, grounds, reinforcement, accessories, layout, and installation details.

SD-14 Samples

Vinyl-fabric-faced Cork Tackboards; FIO.

Manufacturer's color charts consisting of actual sections of vinyl fabric, showing the full range of colors, textures, and patterns available for each type of vinyl-fabric-faced cork tackboard indicated.

Aluminum Frame; FIO.

Samples of each finish type and color, on 6-inch-long sections of extrusions and not less than 4-inch squares of sheet or plate, showing the full range of colors available.

Tackboards; FIO.

Sample panels not less than 8-1/2 inches by 11 inches. Include a sample panel for each color, texture, and pattern required.

PART 2 PRODUCTS

2.1 TACK BOARDS

Tackboards shall be the products of one manufacturer. Tackboard shall have 1/4-inch thick core face factory laminated to a hardboard or particleboard core, and shall be provided with a factory installed aluminum frame. Color of the cork shall be as indicated in Section 09915 COLOR SCHEDULE.

2.2 FIRE EXTINGUISHER CABINETS

Metal fire extinguisher cabinets shall be furnished and installed where shown on the drawings. Cabinets shall be of the recessed type suitable for 2-1/2 gallon extinguishers. Box and trim shall be of heavy gauge rolled steel. Door shall be a rigid frame with full length piano type hinge and double strength (DSA) glass panel. Door and box shall be prime-coated inside and out. Cabinets shall be fire resistance rated at the same rating as the wall into which they are being installed.

PART 3 EXECUTION

3.1 INSTALLATION, GENERAL

3.1.1 Layout

Install items included in this section in locations and at mounting heights indicated, or if not indicated, at heights to comply with applicable regulations of governing authorities. Where the item is not regulated by any governing authority and also not indicated, installation shall be as directed by the Contracting Officer.

3.1.2 Anchorage

Installation of the various specialty items shall be in accordance with the manufacturer's written instructions using anchors, fasteners, and hardware appropriate for the substrate and part being anchored or attached. Where possible use concealed anchors. Where concealed anchors are not practical, the finish of exposed portions of anchors shall harmonize with the part being attached or anchored.

3.2 TACKBOARDS

3.2.1 Layout and Preparation

Deliver factory-built tackboard units completely assembled in one piece without joints.

3.2.2 Installation

Install units in locations and at mounting heights indicated and in accordance with the manufacturer's instructions. Keep perimeter lines straight, plumb,

and level. Provide grounds, clips, backing materials, adhesives, brackets, anchors, trim, and accessories necessary for a complete installation.

3.3 FIRE EXTINGUISHERS AND CABINETS

3.3.1 Recessed Cabinets

Prepare recesses in walls for fire extinguisher cabinets as required by type and size of cabinet and style of trim and to comply with manufacturer's instructions.

Securely fasten mounting brackets and fire extinguisher cabinets to structure, square and plumb, to comply with manufacturer's instructions.

3.4 ADJUST AND CLEAN

Adjust all specialty items in accordance with the manufacturer's written instructions. Verify that accessories required for each unit have been properly installed and that operating units function properly. Clean all surfaces in accordance with the manufacturer's instructions.

-- End of Section --

SECTION 10160

TOILET PARTITIONS

PART 1 GENERAL

1.1 REFERENCES

The publications listed below form a part of this specification to the extent referenced. The publications are referred to in the text by basic designation only.

CODE OF FEDERAL REGULATIONS (CFR)

36 CFR 1191	Americans with Disabilities Act (ADA) Accessibility Guidelines for Buildings and Facilities

FEDERAL SPECIFICATIONS (FS)

FS RR-P-1352	(Rev C) Partitions, Toilet, Complete

FEDERAL STANDARDS (FED-STD)

FED-STD 795	(Basic) Uniform Federal Accessibility Standards

1.2 SYSTEM DESCRIPTION

Toilet partition system, including toilet enclosures, room entrance screens, and urinal screens, shall be a complete and usable system of panels, hardware, and support components. The partition system shall be provided by a single manufacturer and shall be a standard product as shown in the most recent catalog data. The partition system shall comply with FED-STD 795 and 36 CFR 1191 for areas as shown.

1.3 SUBMITTALS

Government approval is required for submittals with a "GA" designation; submittals having an "FIO" designation are for information only. The following shall be submitted in accordance with Section 01330 SUBMITTAL PROCEDURES:

SD-01 Data

Urinal Screens; FIO.

Manufacturer's technical data and catalog cuts including installation and cleaning instructions.

SD-04 Drawings

Urinal Screens; FIO.

Drawings showing plans, elevations, details of construction, hardware, reinforcing, fittings, mountings, and anchorings.

SD-14 Samples

Urinal Screens; GA.

Manufacturer's standard color charts and color samples.

1.4 DELIVERY, STORAGE, AND HANDLING

Components shall be delivered to the jobsite in the manufacturer's original packaging with the brand, item identification, and project reference clearly marked. Components shall be stored in a dry location that is adequately ventilated and free from dust, water, or other contaminants and shall have easy access for inspection and handling.

1.5 WARRANTY

Manufacturer's standard performance guarantees or warranties that extend beyond a 1 year period shall be provided.

PART 2 PRODUCTS

2.1 URINAL SCREENS

Urinal screens shall conform to FS RR-P-1352, Type I, Style F, Finish 5 (solid plastic). Width and height of urinal screens shall be as shown.

2.2 HARDWARE

Hardware shall conform to FS RR-P-1352 for the specified type and style of partitions. Hardware finish shall be highly resistant to alkalies, urine, and other common toilet room acids.

2.3 COLORS

Color shall be as specified in Section 09915 COLOR SCHEDULE.

PART 3 EXECUTION

3.1 INSTALLATION

Urinal screens shall be installed straight and plumb in accordance with approved manufacturer's instructions with horizontal lines level and rigidly anchored to the supporting construction. Anchorage to walls shall be by through-bolting. Drilling and cutting for installation of anchors shall be at locations that will be concealed in the finished work.

3.2 CLEANING

Screens shall be cleaned in accordance with approved manufacturer's instructions and shall be protected from damage until accepted.

-- End of Section --

SECTION 10440

INTERIOR SIGNAGE

PART 1 GENERAL

1.1 REFERENCES

The publications listed below form a part of this specification to the extent referenced. The publications are referred to in the text by basic designation only.

ALUMINUM ASSOCIATION (AA)

AA DAF-45	(1980) Designation System for Aluminum Finishes
AA PX-1	(1989) Registration Record of Aluminum Association Alloy Designations and Chemical Composition Limits for Aluminum Alloys in the Form of Castings and Ingot
AA SAA-46	(1978) Standards for Anodized Architectural Aluminum

AMERICAN NATIONAL STANDARDS INSTITUTE (ANSI)

ANSI Z97.1	(1984; Rev 1994) Safety Performance Specifications and Methods of Test for Safety Glazing Materials Used in Buildings

AMERICAN SOCIETY FOR TESTING AND MATERIALS (ASTM)

ASTM B 209	(1996) Aluminum and Aluminum-Alloy Sheet and Plate
ASTM B 221	(1996) Aluminum and Aluminum-Alloy Extruded Bars, Rods, Wire, Shapes, and Tubes

1.2 GENERAL

Interior signage shall be of the sizes and types shown on the drawings, shall conform to the requirements specified herein, and shall be provided at the locations indicated. Signs shall be complete with lettering, framing as detailed, and related components for a complete installation. Signs shall be the standard product of a manufacturer regularly engaged in the manufacture of such products and shall essentially duplicate signs that have been in satisfactory use at least 2 years prior to bid opening.

This section revised
by AMDT 0001

1.3 SUBMITTALS

Government approval is required for submittals with a "GA" designation; submittals having an "FIO" designation are for information only. The following shall be submitted in accordance with Section 01330 SUBMITTAL PROCEDURES:

SD-01 Data

Interior Signage; FIO.

Manufacturer's descriptive data, catalogs cuts, installation and cleaning instructions.

SD-04 Drawings

Interior Signage; GA.

Drawings showing elevations of each type of sign, dimensions, details and methods of mounting or anchoring, shape and thickness of materials, and details of construction. A schedule showing the location of each sign type shall be included.

SD-14 Samples

Interior Signage; GA.

One sample of each of the following sign types showing typical quality and workmanship. The samples may be installed in the work, provided each sample is identified and location recorded.

Two samples of manufacturer's standard color chips for each material requiring color selection.

1.4 DELIVERY AND STORAGE

Materials shall be delivered to the jobsite in manufacturer's original packaging and stored in a clean, dry area.

PART 2 PRODUCTS

2.1 COLOR, FINISH, AND CONTRAST

Color shall be in accordance with Section 09915 COLOR SCHEDULE. The characters and background of signs shall be eggshell, matte, or other non-glare finish. Characters and symbols shall contrast with their background - either light characters on a dark background or dark characters on a light background.

2.2 CHARACTER PROPORTIONS AND HEIGHTS

Letters and numbers on signs shall have a width-to-height ratio between 3:5 and 1:1 and a stroke-width-to-height ratio between 1:5 and 1:10. Characters

This section revised
by AMDT 0001

and numbers on signs shall be sized according to the viewing distance from which they are to be read. The minimum height is measured using an upper case letter X. Lower case characters are permitted.

2.3 ALUMINUM ALLOY PRODUCTS

Aluminum extrusions shall be at least 1/8 inch thick, and aluminum plate or sheet shall be at least 0.0508 inch thick. Extrusions shall conform to ASTM 8 221; plate and sheet shall conform to ASTM B 209. Where anodic coatings are specified, alloy shall conform to AA PK-1 alloy designation 514.0. Exposed anodized aluminum finishes shall be as shown and shall conform to AA SAA-46.

2.3.1 Anodic Coating

Anodized finish shall conform to AA DAF-45 clear (natural) designation AA-M10-C22-A31, Architectural Class II 0.4 mil or thicker.

2.4 VINYL SHEETING FOR GRAPHICS

Vinyl sheeting for graphics shall be a minimum 0.003 inch film thickness. Film shall include a precoated pressure sensitive adhesive backing.

2.5 ACRYLIC SHEET

Acrylic sheet for panels and components shall conform to ANSI Z97.1.

2.6 PLAQUE SIGNS

Plaque signs shall be a modular type signage system. Signs shall be fabricated of acrylic plastic conforming to ANSI Z97.1.

2.6.1 Standard Modular Plaque Signs

Plaque signs shall consist of matte finish acrylic plastic 1/8 inch thick. Frames shall be aluminum. Corners of signs shall be squared.

2.6.2 Type of Mounting For Plaque Signs

Surface mounted signs shall be provided with 1/16 inch thick vinyl foam tape. Sign inserts shall be provided with 1/16 inch thick foam tape.

2.7 GRAPHICS

2.7.1 Raised and Brailled Characters and Pictorial Symbol Signs (Pictograms)

Letters and numbers on signs shall be raised 1/32 inch upper case, sans serif or simple serif type and shall be accompanied with Grade 2 Braille. Raised characters shall be at least 5/8 inch height, but no higher than 2 inches. Pictograms shall be accompanied by the equivalent verbal description placed directly below the pictogram. The border dimension of the pictogram shall be 6 inches minimum in height. Signs shall use the international symbol of accessibility.

This section revised
by AMDT 0001

2.7.2 Graphics Application

Signage graphics shall conform to the following:

a. Pressure sensitive precision cut vinyl letters shall be provided. Edges and corners of finished letter forms and graphics shall be true and clean.

- - or - -

Message shall be applied to panel using the silkscreen process. Silkscreened images shall be executed with photo screens prepared from original art. No handcut screens will be accepted. Original art shall be defined as artwork that is a first generation reproduction of the specified art. Edges and corners shall be clean.

b. Tactile characters and symbols shall be raised 1/32 inch minimum from the sign face. Signs shall be of one piece construction. Add-on characters are not acceptable.

2.7.3 Messages

Provide one sign for each door. Signs shall bear the room number and name of the room being served. Final text of massage shall be provided by the Contracting Officer. Helvetica medium. Type size as indicated.

2.8 ANCHORS AND-FASTENERS

Exposed anchor and fastener materials shall be compatible with metal to which applied and shall have matching color and finish. Anchorage system shall be of the type recommended by the manufacturer of the indicated substrate. Where recommended by signage manufacturer, foam tape pads may be used for anchorage. Foam tape pads shall be minimum 1/16 inch thick closed cell vinyl foam with adhesive backing. Adhesive shall be transparent, long aging, high tech formulation on two sides of the vinyl foam. Adhesive surfaces shall be protected with a 5 mil green flatstock treated with silicone. Foam pads shall be sized for the signage as per signage manufacturer's recommendations.

2.9 FABRICATION AND MANUFACTURE

2.9.1 Workmanship

Holes for bolts and screws shall be drilled or punched. Drilling and punching shall produce clean, true lines and surfaces. Exposed surfaces of work shall have a smooth finish and exposed riveting shall be flush. Fastenings shall be concealed where practicable.

2.9.2 Dissimilar Materials

Where dissimilar metals are in contact, the surfaces will be protected to prevent galvanic or corrosive action.

This section revised
by AMDT 0001

PART 3 EXECUTION

3.1 INSTALLATION

Signs shall be installed in accordance with approved manufacturer's instructions at locations shown on the drawings. Signs shall be installed plumb and true at mounting heights indicated, and by method shown or specified. Except where indicated otherwise signs shall be installed on the wall adjacent to the latch side of the door. Mounting height shall be 60 inches above the finish floor to the centerline of the sign. Mounting location for such signage shall be so that a person may approach within 3 inches of signage without encountering protruding objects or standing within the swing of a door. Signs on doors or other surfaces shall not be installed until finishes on such surfaces have been installed.

3.1.1 Anchorage

Anchorage shall be in accordance with approved manufacturer's instructions.

3.1.2 Protection and Cleaning

The work shall be protected against damage during construction. Frames, and other sign surfaces shall be cleaned in accordance with the manufacturer's approved instructions.

-- End of Section --

This section revised
by AMDT 0001

SECTION 10800

TOILET ACCESSORIES

PART 1 GENERAL

1.1 REFERENCES

The publications listed below form a part of this specification to the extent referenced. The publications are referred to in the text by basic designation only.

AMERICAN SOCIETY FOR TESTING AND MATERIALS (ASTM)

ASTM C 1036 (1991) Flat Glass

COMMERCIAL ITEM DESCRIPTIONS (CID)

CID A-A-2380 (Basic) Dispenser, Paper Towel

1.2 SUBMITTALS

Government approval is required for submittals with a "GA" designation, submittals having an "FIO" designation are for information only. The following shall be submitted in accordance with Section 01330 SUBMITTAL PROCEDURES:

SD-01 Data

Finishes; FIO. Accessory Items; FIO.

Manufacturer's descriptive data and catalog cuts indicating materials of construction, fasteners proposed for use for each type of wall construction, mounting instructions, and operation instructions.

SD-14 Samples

Finishes; FIO. Accessory Items; FIO.

One sample of each accessory proposed for use. Approved samples may be incorporated into the finished work, provided they are identified and their locations noted.

1.3 DELIVERY, STORAGE, AND HANDLING

Toilet accessories shall be wrapped for shipment and storage, delivered to the jobsite in manufacturer's original packaging and stored in a clean, dry area protected from construction damage and vandalism.

PART 2 PRODUCTS

2.1 MANUFACTURED UNITS

Toilet accessories shall be provided where indicated in accordance with paragraph SCHEDULE. Each accessory item shall be complete with the necessary mounting plates, shall be of sturdy construction with corrosion resistant surface.

2.1.1 Anchors and Fasteners

Anchors and fasteners shall be capable of developing a restraining force commensurate with the strength of the accessory to be mounted and shall be suited for use with the supporting construction. Exposed fasteners shall be of tamperproof design and shall be finished to match the accessory.

2.1.2 Finishes

Except where noted otherwise, finishes on metal shall be provided as follows:

Metal	Finish
Stainless steel	No. 4 satin finish
Carbon steel, copper alloy, and brass	Chromium plated, bright

2.2 ACCESSORY ITEMS

Accessory items shall conform to the requirements specified below.

2.2.1 Grab Bar (GB)

Grab bar shall be 18 gauge, 1-1/4 inches OD Type 304 stainless steel. Grab bar shall be form and length as indicated. Exposed mounting flange shall have set screw mounting holes concealed on the lip of the flange. Grab bar shall have peened non-slip surface. Installed bars shall be capable of withstanding a 500 pound vertical load without coming loose from the fastenings and without obvious permanent deformation. Space between wall and grab bar shall be 1/2 inch.

2.2.2 Glass Mirrors

Glass for mirrors shall be Type I transparent flat type, Class 1-clear. Glazing Quality q1 1/4 inch thick conforming to ASTM C 1036. Glass color shall be clear. Glass shall be coated on one surface with silver coating, copper protective coating, and mirror backing paint. Silver coating shall be highly adhesive pure silver coating of a thickness which shall provide reflectivity of 83 percent or more of incident light when viewed through 1/4 inch thick glass, and shall be free of pinholes or other defects. Copper protective coating shall be pure bright reflective copper, homogeneous without sludge, pinholes or other defects, and shall be of proper thickness to prevent "adhesion pull" by mirror backing paint. Mirror backing paint shall consist of two coats of special scratch and abrasion-resistant paint and shall be baked in uniform thickness to provide a protection for silver and copper coatings which will permit normal cutting and edge fabrication. Except for tilt mirror, all mirrors shall be 18 inches by 24 inches in size.

2.2.3 Mirror, Tilt (MT)

Tilt mirror shall be surface mounted and shall provide full visibility for person in a wheelchair. Mirror shall have fixed tilt, extending at least 4 inches from the wall at the top and tapering to 1 inch at the bottom. Size shall be 18 inches by 30 inches. Glass for mirrors shall conform to ASTM C 1036 and paragraph Glass Mirrors.

2.2.4 Paper Towel Dispenser (PTD)

Paper towel dispenser shall conform to CID A-A-2380, shall be constructed of not less than 0.269 inch Type 304 stainless steel, and shall be surface mounted. Locking mechanism shall be tumbler key lock. Dispenser shall be designed to dispense C-fold towels.

2.2.5 Shower Curtain Rods (SCR)

Shower curtain rods shall be Type 304 stainless steel 1-1/4 inch OD by 0.049 inch minimum straight length to meet installation conditions.

2.2.6 Soap Holder (SH)

Soap holder shall be surface mounted Type 304 stainless steel. Separate supports shall be stainless steel.

2.2.7 Shelf, Metal, Light Duty (SMLD)

Light duty metal shelf shall be supported between brackets or on brackets. Brackets shall prevent lateral movement of the shelf. Shelf shall be 18 inches long. Shelf and brackets shall be stainless steel.

2.2.8 Towel Bar (TB)

Towel bar shall be stainless steel with a minimum thickness of .015 inch. Bar shall be minimum 3/4 inch diameter, or 5/8 inch square. Finish shall be satin.

2.2.9 Double Robe Hook

Towel pin shall have concealed wall fastenings, and a double pin integral with or permanently fastened to wall flange. Maximum projection shall be 4 inches. Design shall be consistent with design of other accessory items.

2.2.10 Toilet Tissue Dispenser (TTD)

Toilet tissue holder shall be Type II - surface mounted for one roll of tissue.

2.2.11 Mop Rack

Mop rack shall be 2 surface mounted stainless steel shelf/rack with synthetic rubber rotating cam-locks to capture mop handles. Rack shall accommodate a minimum of 4 mops and/or brooms.

PART 3 EXECUTION

3.1 INSTALLATION

Toilet accessories shall be securely fastened to the supporting construction in accordance with the manufacturer's approved instructions. Accessories shall be protected from damage from the time of installation until acceptance.

-- End of Section --

US Army Corps
of Engineers
Tulsa District

TWO COMPANY SATELLITE FIRE STATION
FORT SILL, OKLAHOMA

PN: 45652 FY: 98

Volume 4 Specifications Divisions 11 thru 15
(Section 15950)

PROFESSIONAL DESIGN GROUP
Consulting Engineers & Architects
3545 NW 58th Suite 200
Oklahoma City, Oklahoma 73112

APRIL 1998

SECTION 11302

PREFABRICATED GRAVITY OIL/WATER SEPARATOR

PART 1 GENERAL

1.1 SUMMARY (Not Applicable)

1.2 REFERENCES

The publications listed below form a part of this specification to the extent referenced. The publications are referred to in the text by basic designation only.

ENVIRONMENTAL PROTECTION AGENCY (EPA)

EPA MCAWW	Methods of Chemical Analysis of Water and Wastes.

1.3 SUBMITTALS

Government approval is required for submittals with a "GA" designation; submittals having an "FIO" designation are for information only. The following shall be submitted in accordance with Section 01300, SUBMITTAL DESCRIPTIONS:

SD-01 Data

Calculations; GA

Calculations shall be submitted showing the hydraulic overflow rate with respect to the number of square feet of horizontal surface area.

SD-04 Drawings

Fabrication/Erection/Installation Drawings; FIO

Manufacturer's drawings for the oil/water separator, including the separate oil-storage tank or compartment, indicating dimensions, location of all fittings and accessories, operating and performance characteristics and performance test results, along with the manufacturer's recommended installation procedures shall be submitted.

1.4 NAMEPLATES

Each oil/water separator shall have a nameplate securely attached, bearing the manufacturer's name, address, and catalog or model number. In lieu of nameplate, the manufacturer's name or trademark may be cast integrally, or stamped, or otherwise permanently marked.

1.5 PERFORMANCE TESTING

1.5.1 Testing Procedure

A representative model of the oil/water separator proposed shall be tested prior to installation. Test procedure shall be as follows:

a. Fill the oil/water separator with fresh clean water to maximum capacity, flush, and drain.

b. Refill the separator to maximum capacity with fresh, clean water at 50 +/- 5 degrees F. Fill the oil separation compartment with new S.A.E. 30 lubricating oil to the level where skimming will begin.

c. In order to stabilize internal working components, introduce a flow to the separator inlet, of fresh water at 50 +/- 5 degrees F, flowing at a steady uninterrupted rate equal to the rated capacity of the unit being tested, completely mixed with new S.A.E. 30 lubricating oil in a concentration of one quart per five gallons of fresh water. Flow shall be terminated when skimming action within the separator has stabilized.

d. Introduce an artificial waste stream to the separator inlet. The waste stream shall consist of a flow of fresh, clean water at 50 +/- 5 degrees F, flowing at a steady uninterrupted rate of 10 +/- 1 gpm for a duration of 30 minutes. After the first 5 minutes has elapsed, combine with the waste stream, 5 quarts of new S.A.E. 30 lubricating oil, to be completely mixed with the waste stream and added uniformly for the duration of the second 5 minutes of the 30 minute test.

e. During the above mentioned 30 minute test, all skimmings shall be collected for analysis of product skim, and the effluent shall be continuously sampled with an approved composite sampler, collecting no less than 2,000 ml of representative effluent, for analysis of free oil and grease.

f. If the quantity of product skim is less than 5 quarts, the entire test shall be repeated.

1.5.2 Sample Analysis

Samples shall be collected and tested for product skim and free oil and grease. Testing shall be by an approved independent laboratory or organization regularly employed in the analysis of water and wastewater.

1.5.2.1 Product Skim

Product skim shall be analyzed by pouring the skimmings obtained during the 30 minute test into a graduated cylinder. After sitting at room temperature for sufficient time to differentiate between oil and any water present, the volume of water shall be noted and subtracted from the total volume. The remaining volume will be the volume of oil and shall be reported as a percentage of the total volume of product skim.

1.5.2.2 Free Oil and Grease

Two representative samples shall be taken for analysis. Sample number 1 shall be analyzed for total oil and grease in accordance

with EPA MCAWW, Method 413.2. Sample number 2 shall be placed in a straight-walled separatory funnel and allowed to settle for 2 hours. After separation, the drawn water layer shall be acidified to a pH level of 1 to 2 and analyzed in accordance with EPA MCAWW, Method 413.2. The results of this analysis shall be reported as emulsified and dissolved oil and grease. Free oil and grease, for the purpose of separator performance, shall be determined by subtracting the results of sample 2 analysis (emulsified oil and grease) from the results of sample 1 (total oil and grease).

1.5.3 Alternative Test Methods

Alternative methods of testing the proposed oil/water separator may be submitted for approval by the Contracting Officer.

PART 2 PRODUCTS

2.1 GENERAL

Gravity oil/water separator shall provide for extraction of grit, suspended settleable solids, free oil, grease, kerosine, and gasoline residues from the apparatus bay floor drains. The separator shall be a UL Type II double wall steel with the UL label on the outer shell, prefabricated or package type unit structurally designed for installation shown without detrimental buckling, distortion, or other defects. The shell and components shall be corrosion resistant. The oil/water separator shall have an integral oil storage capacity as indicated. The storage tank shall be steel. Steel tanks shall be protected from corrosion in accordance with the Steel Tank Institute sti-P3. The unit shall be provided with a high oil level alarm and interstitial leak detection. The level and leak detection alarm panel shall be mounted 48-inches above the floor where indicated. The tank shall be provided with the fittings shown.

2.2 DESIGN

The separator shall be based on gravity separation and continuous flow. The design shall not require the use of chemical aids, adsorbents, or other additives in order to meet the requirements herein. The use of pumping equipment or other motorized mechanical aids will not be allowed. However, the use of coalescing plates or other static equipment is acceptable. Coalescing plates spacing shall be 3/4-inch maximum and shall be inclined between 45 and 60 degrees. The inlet shall be constructed to uniformly distribute the wastewater and create laminar flow conditions. The highest elevation of wastewater within the separator unit shall be no higher than the invert of the top (crown) of the outlet pipe or, if provided, the dynamic liquid level above the outlet overflow weir. The outlet portion of the separator shall have curtain walls, baffles or other arrangements to assure that floating oil and grease cannot enter the effluent.

2.3 PERFORMANCE REQUIREMENTS

a. The separator shall be rated for a continuous wastewater flow of 40 gpm at 45 F to 75 F.

b. The sedimentation chamber of the separator shall have a hydraulic overflow rate not greater than 0.35 gallons per min. per

square foot of horizontal surface area, and a sludge storage capacity of not less than 4.5 cubic feet.

c. Effluent composite concentration of free oil and grease shall not be greater than 15 mg/l.

d. Product skim shall not contain less than 50 percent by volume of free oil content.

PART 3 EXECUTION

3.1 PREPARATION

Excavation and Backfill for the oil/water separator shall be in accordance with Section 02221, EXCAVATION, FILLING, AND BACKFILLING FOR BUILDINGS.

3.2 INSTALLATION

Installation shall be in accordance with the manufacturer's recommended installation procedures.

3.3 HYDROSTATIC TESTING

After installation of the oil/water separator, and prior to backfilling, the Contractor shall fill the unit with clean water. The structure shall show no signs of leakage after a 30 minute period.

-- End of Section --

SECTION 11452

APPLIANCES

PART 1 GENERAL

This section covers appliances as indicated on the drawings and as specified herein. The Contractor shall provide and install appliances indicated to be provided by Contractor.

1.1 SUBMITTALS

Government approval is required for submittals with a "GA' designation; submittals having an "FIO" designation are for information only. The following shall be submitted in accordance with Section 01330; SUBMIT$AL PROCEDURES:

SD-01 Data

Appliances; FIO

Catalog cuts and descriptive material shall be submitted for approval in accordance with the requirements of the SPECIAL CLAUSES. Descriptive material shall include rough-in dimensions, details and full information on required electrical and other services required to provide a functional appliance.

SD-14 Samples

Appliances; FIO

Samples of finish color options shall be submitted for approval and/or color selection.

PART 2 PRODUCTS

2.1 SCHEDULE OF APPLIANCES

The following schedule is coordinated with the drawings. Refer to those drawings for quantities and locations of the various items of Residential Appliances. The term "provided by" means the same as "furnish and install".

2.1.1 ITEM 1: Range

Provided by: Contractor.

Size: 30 inches.

Fuel: Electric.

Color: White.

Manufacturer and Model No.: General Electric No. JSS16PW or equal.

This section added
by AMDT 0001

2.1.2 ITEM 2: Range Hood

Provided by: Contractor

Size: 30 inches

Performance: 410 cfm minimum (vertical exhaust).

Type: Vent to outside.

Color: White.

Manufacturer and Model No.: General Electric No. 376V or equal.

2.1.3 ITEM 3: Refrigerator

Provided by: Contractor.

Size: Approximately 36 inches wide x 32 inches deep (including handle) x 68 inches.

Minimum Capacity: 15.5 cubic feet cooler, 9 cubic feet freezer.

Color: White.

Options: Ice maker.

Manufacturer: General Electric No. TXF25PAY.

2.1.4 ITEM 4: Disposal

REFER MECHANICAL SECTION 15400 FOR DISPOSAL SPECIFICATION.

2.1.5 ITEM 5: Fire Extinguishing System - Range Hood

2.1.5.1 General

The fire extinguishing system shall be capable of detecting a cooking grease fire originating on the cook top, extinguish the fire, and prevent re-ignition, while at the same time, shut-off the gas supply to surface elements on the kitchen cook top. Each system shall be provided with a means to distribute the chemical agent, fire detection components, container for storing the chemical, valve assembly with pressure gauge, mounting bracket for container, and appliance shut-off device. The fire extinguishing system shall have a current U.L. listing and must be certified to meet Federally required response times to operate and extinguish a fire within 90 seconds after auto ignition of cooking oil in a test vessel.

2.1.5.2 Chemical Agent

Dry Chemical: Shall conform to the requirements of National Fire Protection Association (NFPA) Standard No. 17 for Dry Chemical Fire Extinguishing Systems.

This section added
by AMDT 0001

2.1.5.3 Cylinder and Valve Assembly

The extinguisher cylinder and valve assembly shall be provided fully charged with chemical and pressurized with dry nitrogen in accordance with Listed requirements. A pressure gauge attached to the valve assembly shall be positioned to allow visual inspection when installed within a kitchen cabinet. Maximum allowable height of container (including valve assembly and mounting bracket) shall not exceed 12 inches. The container and valve assembly shall be of the re-serviceable type and provide maintenance requirements synonymous with that required for portable hand-held fire extinguishers, according to National Fire Protection Association (NFPA) Standard 10. The container and valve assembly shall be provided factory assembled to the mounting bracket. Assembly shall include a pre-mounted activation switch for the appliance shut-off device, actuation spring and necessary attachment for the Fire Detection Unit.

The complete extinguisher cylinder and valve assembly shall be installed in a protected area above the range hood (normally, kitchen cabinets). Installations which expose extinguisher cylinder and valve assembly to direct cooking heat and grease will not be accepted.

2.1.5.4 Appliance Nozzles

Appliance nozzles shall be constructed of brass, stainless steel or a combination thereof. Appliance nozzles with painted surfaces shall not be accepted. Appliance nozzles shall not extend below the lowest component of the range hood. Design shall provide equal distribution of chemical agent and allow chemical to flow effectively with low velocity to avoid splattering of burning grease.

2.1.5.5 Fire Detection Unit

Reusable Thermal Links: The fire detection unit shall consist of 1/16 inch stainless steel cable, "S" hooks, cable crimps, corner pulleys and reusable thermal links, plus other necessary hardware for complete installation. Each fire detection unit, when installed, shall provide a thermal link over each cooking surface burner, have no exposed cable ends protruding under range hood, and prevent detection components from splattering grease during system actuation. Components shall not extend (when installed) below the lowest component of the range hood. The temperature rating of thermal links shall prevent pre-mature system actuation from normal cooking temperatures common with residential type gas and/or electric cook top burners. Only those fire extinguishing systems to have passed the "Exposure Temperature Test for Detector Links n in accordance with Underwriters Laboratories Incorporated (U.L.) criteria (Subject 300A) shall be considered. Reusable thermal links shall not require periodic replacement.

2.1.5.6 Chemical Agent Distribution Component

Rigid Piping and Flexible Hose: Rigid pipe, pipe fittings and flexible hose shall be provided factory assembled and ready for installation into kitchen cabinet space. The use of copper tubing shall not be accepted. Pipe, pipe

This section added
by AMDT 0001

fittings and flexible hose shall comply with National Fire Protection Association (NFPA) Standard No. 17 for Dry Chemical Extinguishing Systems. The combination of pipe and flexible hose shall have been investigated by Underwriters Laboratories Incorporated (U.L.) and Listed for this service.

2.1.5.7 Appliance Shut-Down Device

Cook top shall be provided with a Listed device to automatically shut-off the gas supply to surface burners on the kitchen cook top upon actuation of the fire extinguishing system. The gas supply shall remain "off" until manually reset. Electrical power cut-off to kitchen range hood exhaust fan shall not be required for Underwriters Laboratories Incorporated (U.L.) Listed fire extinguishing systems.

2.1.5.8 Gas Cook Top Shut-off

Cook top shall be provided with a U.L. Listed pneumatic operated gas valve. The shut-off is activated by pressure transmitted to the valve through a Teflon tube encased in a stainless steel braided cover that connects to the valve on one end and to the distribution assembly on the other end. The valves shall be designed to close upon activation of the system and remain closed until manually reset. Valve pipe size shall be 3/4 inch unless otherwise specified.

PART 3 EXECUTION

3.1 INSTALLATION

Appliances shall be installed level, plumb, and true to line, and shall be attached to the appropriate construction with suitable devices to securely anchor each unit. Appliances shall be installed in accordance with the manufacturer's written instructions. All connections to utilities and/or power shall be made. Prior to final acceptance, the Contractor shall level appliances, align all doors, adjust all hardware, test appliances for appropriate operation and leave in a clean, neat, and properly operating condition.

-- End of Section --

This section added
by AMDT 0001

SECTION 13080

SEISMIC PROTECTION FOR MECHANICAL, ELECTRICAL EQUIPMENT

PART 1 GENERAL

1.1 REFERENCES

The publications listed below form a part of this specification to the extent referenced. The publications are referred to in the text by basic designation only.

AMERICAN NATIONAL STANDARDS INSTITUTE (ANSI)

AMERICAN SOCIETY FOR TESTING AND MATERIALS (ASTM)

ASTM A 36	(1996) Carbon Structural Steel
ASTM A 53	(1995a) Pipe, Steel, Black and Hot-Dipped, Zinc-Coated Welded and Seamless
ASTM A 153	(1996) Zinc Coating (Hot-Dip) on Iron and Steel Hardware
ASTM A 307	(1994) Carbon Steel Bolts and Studs, 60,000 PSI Tensile Strength
ASTM A 500	(1993) Cold-Formed Welded and Seamless Carbon Steel Structural Tubing in Rounds and Shapes
ASTM A 563	(1994) Carbon and Alloy Steel Nuts
ASTM A 603	(1994) Zinc-Coated Steel Structural Wire Rope
ASTM A 653	(1996) Steel Sheet, Zinc-Coated (Galvanized) or Zinc-Iron Alloy-Coated (Galvannealed) by the Hot-Dip Process
ASTM E 488	(1990) Strength of Anchors in Concrete and Masonry Elements

AMERICAN SOCIETY OF MECHANICAL ENGINEERS (ASME)

ASME B18.2.1	(1981; Supple 1991; R 1992) Square and Hex Bolts and Screws (Inch Series)
ASME B18.2.2	(1987; R 1993) Square and Hex Nuts (Inch Series)

INTERNATIONAL CONFERENCE OF BUILDING OFFICIALS (ICBO)

ICBO-01	(1994) Uniform Building Code (3 Vol.)

SHEET METAL AIR CONDITIONING CONTRACTORS' NATIONAL ASSOCIATION (SMACNA)

SMACNA-12	(1991; Appx E, 1993) Seismic Restraint Manual Guidelines for Mechanical Systems

UNDERWRITERS LABORATORIES (UL)

UL 1570	(1995) Fluorescent Lighting Fixtures

UL 1571 (1991; Rev thru Mar 95) Incandescent Lighting Fixtures

1.2 SYSTEM DESCRIPTION

1.2.1 General

The requirements for seismic protection measures described in this section shall be applied to mechanical/electrical equipment and systems specified herein. Seismic protection requirements shall be in accordance with ICBO-01 using an importance factor of 1.5 and shall be provided in addition to any other requirements called for in other sections of these specifications. This facility shall be designed as being in seismic zone 2; no other zone values shall be used to establish bracing requirements. Lateral support against earthquake induced forces shall be accomplished by positive attachments without consideration of friction resulting from gravity loads.

1.2.2 Mechanical/Electrical Equipment

Mechanical/electrical equipment shall include the following items to the extent required on the drawings or in other sections of these specifications:

Water Heaters
Water and Gas Piping
Air and Refrigerant Compressors
Air Handling Units
Light Fixtures
Transformers
Unit Heaters
Exhaust Fans

1.2.3 Mechanical/Electrical Systems

The following mechanical and electrical systems shall be installed as required on the drawings and other sections of these specifications and shall be seismically protected in accordance with this specification:

All Piping Inside the Building in Accordance With This Specification
All Water Supply Systems
Storm and Sanitary Sewer Systems

1.2.4 Equipment and Systems

The bracing for the following mechanical/electrical equipment and systems shall be developed by the Contractor in accordance with the requirements of this specification:

1.2.5 Exclusion

Seismic protection of piping for fire protection systems shall be installed as specified in Sections 15330 WET PIPE SPRINKLER SYSTEM, FIRE PROTECTION.

1.2.6 Pipes and Ducts Requiring No Special Seismic Restraints

Seismic restraints may be omitted from the following installations:

a. Gas piping less than 1 inch inside diameter.

b. Piping in boiler and mechanical equipment rooms less than 1-1/4 inches inside diameter.

c. All other piping less than 1-1/2 inches inside diameter.

d. Electrical conduit less than 2-1/2 inches inside diameter.

e. Rectangular air handling ducts less than 4 square feet in cross sectional area.

f. Round air handling ducts less than 18 inches in diameter.

g. Piping suspended by individual hangers 12 inches or less in length from the top of pipe to the bottom of the supporting structural member where the hanger is attached, except as noted below.

h. Ducts suspended by hangers 12 inches or less in length from the top of the duct to the bottom of the supporting structural member, except as noted below.

In exemptions g. and h. all hangers shall meet the length requirements. If the length requirement is exceeded by one hanger in the run, the entire run shall be braced.

1.2.7 All Other Interior Piping, Conduit, and Ducts

Interior piping, conduit, and ducts not covered by paragraphs Exclusion or Pipes and Ducts Requiring No special Seismic Restraints shall be seismically protected in accordance with the provisions herein.

1.3 SUBMITTALS

Government approval is required for submittals with a "GA" designation; submittals having an "FIO" designation are for information only. The following shall be submitted in accordance with Section 01330 SUBMITTAL PROCEDURES:

SD-01 Data

Bracing and Coupling; GA. Lighting Fixtures in Buildings; GA. Miscellaneous Equipment; GA.

Copies of the design calculations with the detail drawings. Calculations shall be stamped by a registered engineer and shall verify the capability of structural members to which bracing is attached for carrying the load from the brace.

SD-04 Drawings

Bracing and Coupling; GA. Flexible Couplings or Joints; GA. Resilient Vibration Isolation Devices; GA. Lighting Fixtures in Buildings; GA. Miscellaneous Equipment; GA.

Detail drawings along with catalog cuts, templates, and erection and installation details, as appropriate, for the items listed. Submittals shall be complete in detail; shall indicate thickness, type, grade, class of metal, and dimensions; and shall show construction details, reinforcement, anchorage, and installation with relation to the building construction.

PART 2 PRODUCTS

2.1 MATERIALS AND EQUIPMENT

Materials and equipment shall conform to the requirements specified below:

2.1.1 Bolts and Nuts

Squarehead and hexhead bolts, and heavy hexagon nuts, ASME B18.2.1, ASME B18.2.2, or ASTM A 307 for bolts and ASTM A 563 for nuts. Bolts and nuts used underground and/or exposed to weather shall be galvanized in accordance with ASTM A 153.

2.1.2 Sway Bracing

Material used for members listed in this section and on the drawings, shall be structural steel conforming with the following:

a. Plates, rods, and rolled shapes, ASTM A 36.

b. Wire rope, ASTM A 603.

c. Tubes, ASTM A 500, Grade B.

d. Pipes, ASTM A 53, Type E or S, Grade B.

e. Light gauge angles, less than 1/4 inch thickness, ASTM A 653.

2.1.3 Flexible Couplings

Flexible couplings shall have same pressure and temperature ratings as adjoining pipe.

2.1.3.1 Flexible Mechanical Joints

a. Mechanical couplings for steel or cast iron pipe shall be of the sleeve type and shall provide a tight flexible joint under all reasonable conditions, such as pipe movement caused by expansion, contraction, slight settling or shifting of the ground, minor variations in trench gradients, and traffic vibrations. Where permitted in other sections of these specifications, joints utilizing split-half couplings with grooved or shouldered pipe ends may be used.

b. Sleeve-type couplings shall be used for joining plain-end pipe sections. The coupling shall consist of one steel middle ring, two steel followers, two gaskets, and necessary steel bolts and nuts to compress the gaskets. Underground bolts shall be high-strength type as specified above.

2.1.4 Lighting Fixture Supports

Fixture supports shall be malleable iron. Lighting fixtures and supports shall conform to UL 1570 or UL 1571 as applicable.

PART 3 EXECUTION

3.1 BRACING AND COUPLING

Bracing and coupling shall conform to the arrangements shown. Provisions of this paragraph apply to all piping within a 5 foot line around outside of building unless buried in the ground. Piping grouped for support on trapeze-type hangers shall be braced at the same intervals as determined by the smallest diameter pipe of the group. No trapeze-type hanger shall be secured with less than two 1/2 inch bolts. Bracing rigidly attached to pipe flanges, or similar, shall not be used where it would interfere with thermal expansion of piping.

3.2 FLEXIBLE COUPLINGS OR JOINTS

3.2.1 Building Piping

Flexible couplings or joints in building piping shall be provided at bottom of all pipe risers larger than 3-1/2 inches in diameter. Flexible couplings or joints shall be braced laterally without interfering with the action of the flexible coupling or joint. Cast iron waste and vent piping need only comply with these provisions when caulked joints are used. Flexible bell and spigot pipe joints using rubber gaskets or no-hub fittings may be used at each branch adjacent to tees and elbows for underground waste piping inside of building to comply with these requirements.

3.2.2 Underground Piping

Underground piping and 4 inch or larger conduit, shall have flexible couplings installed where the piping enters the building. The couplings shall accommodate 1/2inches of relative movement between the pipe and the building in any direction. Additional flexible couplings shall be provided where shown on the drawings.

3.3 PIPE SLEEVES

Pipe sleeves in interior non-fire rated walls shall be sized as indicated on the drawings to provide clearances that will permit differential movement of piping without the piping striking the pipe sleeve.

3.4 SPREADERS

Spreaders shall be provided between adjacent piping runs to prevent contact during seismic activity whenever pipe or insulated pipe surfaces are less than 4 inches apart. Spreaders shall be applied at same interval as sway braces at an equal distance between the sway braces. If rack type hangers are used where the pipes are restrained from contact by mounting to the rack, spreaders are not required for pipes mounted in the rack. Spreaders shall be applied to surface of bare pipe and over insulation on insulated pipes utilizing high-density inserts and pipe protection shields in accordance with the requirements of Section 15250 THERMAL INSULATION FOR MECHANICAL SYSTEMS.

3.5 ANCHOR BOLTS

3.5.1 Cast-In-Place

Floor or pad mounted equipment shall use cast-in-place anchor bolts, except as specified below. One nut shall be provided on each bolt. Anchor bolts shall conform to the following tabulation for the various equipment weights and specified seismic zone or the manufacturer's installation recommendations, whichever is the most stringent, unless otherwise shown on the drawings. Anchor bolts that exceed the normal depth of equipment foundation piers or pads shall either extend into concrete floor or the foundation shall be increased in depth to accommodate bolt lengths.

3.5.2 Minimum Bolt Sizes, Cast-In-Place Anchor Bolts

Maximum Equipment Weight (Pounds)	Minimum Bolt Sizes (Inches)* Zone 2
500	1/2
1,000	1/2
5,000	1/2
10,000	1/2

*Based on four bolts per item, a minimum embedment of 12 bolt diameters, a minimum bolt spacing of 16 bolt diameters and a minimum edge distance of 12 bolt diameters. Equivalent total cross-sectional area shall be used when more than four bolts per item are provided. Anchor bolts shall conform to ASTM A 307. Anchor bolts shall have an embedded straight length equal to at least 12 times nominal diameter of the bolt.

3.5.3 Expansion or Chemically Bonded Anchors

Expansion or chemically bonded anchors shall not be used unless test data in accordance with ASTM E 488 has been provided to verify the adequacy of the specific anchor and application. The expansion anchor size shall be not less than that required in paragraph Minimum Bolt Sizes, Cast-In-Place Anchor Bolts. Expansion and chemically bonded anchors shall be installed in accordance with the manufacturer's recommendations. The allowable forces shall be adjusted for the spacing between anchor bolts and the

distance between the anchor bolt and the nearest edge, as specified by the manufacturer.

3.5.3.1 General Testing

Expansion and chemically bonded anchors shall be tested in place after installation. The tests shall occur not more than 24 hours after installation of the anchor and shall be conducted by an independent testing agency; testing shall be performed on random anchor bolts as described below.

3.5.3.2 Torque Wrench Testing

Torque wrench testing shall be done on not less than 50 percent of the total installed expansion anchors and at least one anchor for every piece of equipment containing more than two anchors. The test torque shall equal the minimum required installation torque as required by the bolt manufacturer. Torque wrenches shall be calibrated at the beginning of each day the torque tests are performed. Torque wrenches shall be recalibrated for each bolt diameter whenever tests are run on bolts of various diameters. The applied torque shall be between 20 and 100 percent of wrench capacity. The test torque shall be reached within one half turn of the nut, except for 3/8 inch sleeve anchors which shall reach their torque by one quarter turn of the nut. If any anchor fails the test, similar anchors not previously tested shall be tested until 10 consecutive anchors pass. Failed anchors shall be retightened and retested to the specified torque; if the anchor still fails the test it shall be replaced.

3.6 RESILIENT VIBRATION ISOLATION DEVICES

Selection of anchor bolts for vibration isolation devices and/or snubbers for equipment base and foundations shall follow the same procedure as in paragraph ANCHOR BOLTS except that an equipment weight equal to five times the actual equipment weight shall be used.

3.6.1 Resilient and Spring-Type Vibration Devices

Vibration isolation devices shall be selected so that the maximum movement of equipment from the static deflection point shall be 0.5 inches.

3.7 SWAY BRACES FOR PIPING

Sway braces shall be provided to prevent movement of the pipes under seismic loading. Braces shall be provided in both the longitudinal and transverse directions, relative to the axis of the pipe. The bracing shall not interfere with thermal expansion requirements for the pipes as described in other sections of these specifications.

3.7.1 Transverse Sway Bracing

Transverse sway bracing for steel and copper pipe shall be provided at intervals not to exceed those given in the tabulation below as modified for each seismic zone. All runs shall have a minimum of two transverse braces. Transverse sway bracing for pipes of materials other than steel and copper shall be provided at intervals not to exceed the hanger spacing as specified in Section 15400 PLUMBING, GENERAL PURPOSE.

3.7.2 Maximum Span for Transverse Sway Braces in Seismic Zone 4

Pipe Diameter	Std. Wgt. Steel Pipe - 40S		Ex. Strong Steel Pipe - 80S		Copper Tube Type L	
(in.)	*L(ft.)	**F(lbs.)	*L(ft.)	**F(lbs.)	*L(ft.)	**F(lbs.)
1	22	70	22	80	11	17
1-1/2	25	140	26	180	12	35
2	29	220	30	290	14	70
2-1/2	32	380	33	460	15	110
3	34	550	35	710	17	150
3-1/2	36	730	38	930	18	220
4	39	960	40	1,200	19	300
5	41	1,440	44	1,900	20	470
6	45	2,120	46	2,750	22	730

*L Maximum span between lateral supports multiplied by 1.2 for Zone 2

**F Horizontal force on the brace multiplied by 0.6 for Zone 2.

NOTE: Bracing shall consist of at least one vertical angle 2 x 2 x 16 gauge and one diagonal angle of the same size.

3.7.3 Longitudinal Sway Bracing

Longitudinal sway bracing shall be provided at 40 foot intervals except when the location of sway braces is shown on the drawings for the particular piping system. All runs shall have one longitudinal brace minimum. Sway braces shall be constructed in accordance with the drawings. Branch lines, walls, or floors shall not be used as sway braces.

3.7.4 Vertical Runs

Vertical runs of piping shall be braced at not more than 10 foot vertical intervals. For tubing, bracing shall be provided at no more than 4 foot spacing. Vertical braces shall be above the center of gravity of the span being braced. All sway braces shall be constructed in accordance with the drawings. Branch lines, walls, or floors shall not be used as sway braces.

3.7.5 Anchor Rods, Angles, and Bars

Anchor rods, angles, and bars shall be bolted to either pipe clamps or pipe flanges at one end and cast-in-place concrete or masonry insert or clip angles bolted to the steel structure on the other end. Rods shall be solid metal or pipe as specified below. Anchor rods, angles, and bars shall not exceed lengths given in the tabulation below.

3.7.6 Maximum Length for Anchor Braces

Type	Size (Inches)	Maximum Length* (Feet/Inches)	Allowable Loads* (kips)
Angles	1-1/2 x 1-1/2 x 1/4	4-10	5.7
	2 x 2 x 1/4	6-6	7.8
	2-1/2 x 1-1/2 x 1/4	8-0	9.8
	3 x 2-1/2 x 1/4	8-10	10.8
	3 x 3 x 1/4	9-10	11.9
Rods	3/4	3-1	3.7
	7/8	3-8	5.0
Flat Bars	1-1/2 x 1/4	1-2	3.1
	2 x 1/4	1-2	4.1
	2 x 3/8	1-9	6.2
Pipes (40S)	1	7-0	4.1
	1-1/4	9-0	5.5
	1-1/2	10-4	6.6
	2	13-1	8.9

*Based on the slenderness ratio of l/r 200 and ASTM A 36 steel, where l is the length of the brace and r is the least radius of gyration of the brace.

3.7.7 Clamps and Hangers

Clamps or hangers on uninsulated pipes shall be applied directly to pipe. Insulated piping shall have clamps or hangers applied over insulation in accordance with Section 15250 THERMAL INSULATION FOR MECHANICAL SYSTEMS.

3.7.8 Bolts

Bolts used for attachment of anchors to pipe and structure shall be not less than 1/2 inch diameter.

3.8 SWAY BRACES FOR DUCTS

3.8.1 Braced Ducts

Bracing details and spacing for rectangular and round ducts shall be in accordance with SMACNA-12, including Appendix E, using Seismic Hazard Level C.

3.8.2 Unbraced Ducts

Hangers for unbraced ducts shall be positively attached to the duct within 2 inches of the top of the duct with a minimum of two #10 sheet metal screws. Unbraced ducts shall be installed with a 6 inch minimum clearance to vertical ceiling hanger wires.

3.9 SWAY BRACES FOR CONDUIT

Conduit shall be braced as for an equivalent weight pipe.

3.10 EQUIPMENT SWAY BRACING

3.10.1 Suspended Equipment

Equipment sway bracing shall be provided for items supported from overhead floor or roof structures. Braces shall consist of angles, rods, wire rope, bars, or pipes arranged as shown and secured at both ends with not less than 1/2 inch bolts. Braces shall conform to paragraph Maximum Length for Anchor Braces. Sufficient braces shall be provided for equipment to resist

a horizontal force equal to 0.56 times the weight of equipment without exceeding safe working stress of bracing components. Details of equipment bracing shall be submitted for approval. In lieu of bracing with vertical supports, these items may be supported with hangers inclined at 45 degrees directed up and radially away from equipment and oriented symmetrically in 90-degree intervals on the horizontal plane, bisecting the angles of each corner of the equipment, provided that supporting members are properly sized to support operating weight of equipment when hangers are inclined at a 45-degree angle.

3.10.2 Floor or Pad Mounted Equipment

3.10.2.1 Shear Resistance

Floor mounted equipment shall be bolted to the floor. Requirements for the number and installation of bolts to resist shear forces shall be in accordance with paragraph ANCHOR BOLTS.

3.10.2.2 Overturning Resistance

The ratio of the height of the equipment (measured from the base to the center of gravity of the equipment) to the minimum distance between anchor bolts shall be used to determine if overturning forces need to be considered in the sizing of anchor bolts. If this ratio is greater than 4.44 the bolt values in paragraph Minimum Bolt Sizes, Cast-In-Place Anchor Bolts shall not be used and calculations shall be provided to verify the adequacy of the anchor bolts for combined shear and overturning.

3.11 MISCELLANEOUS EQUIPMENT

3.11.1 Rigidly Mounted Equipment

The following specific items of equipment to be furnished under this contract shall be constructed and assembled to withstand a horizontal lateral force of 0.11 times the operating weight of the equipment, at vertical center of gravity of the equipment without causing permanent deformation, dislocations, separation of components, or other damage, which would render the equipment inoperative for significant periods of time following an earthquake.

Rigidly Mounted Equipment

Air-Handling Units
Engine-Generators
Transformers

3.12 LIGHTING FIXTURES IN BUILDINGS

Lighting fixtures and supports shall conform to the following:

3.12.1 Pendant Fixtures

Loop and hook or swivel hanger assemblies for pendant fixtures shall be fitted with a restraining device to hold the stem in the support position during earthquake motions. Pendant-supported fluorescent fixtures shall also be provided with a flexible hanger device at the attachment to the fixture channel to preclude breaking of the support. The motion of swivels or hinged joints shall not cause sharp bends in conductors or damage to insulation.

3.12.2 Recessed Fluorescent Fixtures

Recessed fluorescent individual or continuous-row mounted fixtures shall be supported by a seismic-resistant suspended ceiling support system and shall be fastened thereto at each corner of the fixture with bolts or approved clips; or shall be provided with fixture support wires attached to the building structural members using two wires for individual fixtures,

attached to opposite corners, and one wire per unit of continuous row mounted fixtures. Each wire support shall be capable of supporting four times the weight of the fixture. Recessed lighting fixtures not over 56 pounds in weight and suspended or pendant-hung fixtures not over 20 pounds in weight may be supported by and attached directly to the ceiling system runners by a positive attachment such as screws or bolts, number and size as required by design seismic zone. Fixture accessories, including louvers, diffusers, and lenses shall have lock or screw attachments.

3.12.3 Assembly Mounted on Outlet Box

A supporting assembly that is intended to be mounted on an outlet box shall be designed to accommodate mounting features on 4 inch boxes, 3 inch plaster rings, and fixture studs.

3.12.4 Surface-Mounted Fluorescent Fixtures

Surface-mounted fluorescent individual or continuous-row fixtures shall be attached to a seismic-resistant ceiling support system. Fixture support devices for attaching to suspended ceilings shall be a locking-type scissor clamp or a full loop band that will securely attach to the ceiling support. Fixtures attached to underside of a structural slab shall be properly anchored to the slab at each corner of the fixture.

3.12.5 Wall-Mounted Emergency Light Unit

Each wall-mounted emergency light unit shall be secured to remain in place during a seismic disturbance.

3.12.6 Lateral Force

Light fixture bracing shall be designed to resist a lateral force of 0.56 times the fixture weight.

-- End of Section --

SECTION 15190

IDENTIFICATION OF PIPING

PART 1 GENERAL

1.1 SUMMARY

This section covers identification of the piping systems.

1.2 REFERENCES

The publications listed below forms a part of this specification to the extent referenced. The publication is referred to in the text by the basic designation only.

FEDERAL STANDARD

FD 595 (Rev A w/ Chg. Notices 1-6) Colors.

1.3 SUBMITTALS (Not Applicable)

PART 2 PRODUCTS

2.1 PAINT FOR IDENTIFICATION BANDS AND BLOCKS

Bands or block paints shall be as specified in SECTION 09900 - PAINTING, GENERAL for the finish specified.

2.2 COLOR

The colors used shall conform to the color chips identified by numbers specified in FS 595. Colors shall be as follows:

Color	Number
Yellow	13655
Black	17038
Green	14260
Red	11105
White	17875

2.3 PRESSURE SENSITIVE AND SLIP-ON PLASTIC PIPE MARKERS

At the option of the Contractor, pressure-sensitive pipe markers or slip-on plastic pipe markers of the applicable size and color may be used.

2.4 BRASS TAGS

Where pipes are too small for such application, a brass identification tag shall be fastened securely at specified locations. Tags shall be 1 1/2-inch in diameter with depressed black figures 1/2-inch high.

PART 3 EXECUTION

3.1 APPLICATION

Bands and blocks shall be a minimum of two coats of gloss paint. Surface preparation, materials, and application of paint shall conform to the requirements of the SECTION: PAINTING, GENERAL. Color of bands or blocks shall be as specified hereinafter. Legends and bands or blocks shall be

placed to be easily read from operating positions. Adjacent to legend, arrows shall be painted to indicate the direction of flow of material under normal operating conditions.

3.2 LOCATIONS

All piping in buildings and heating tunnels shall be identification painted with bands or blocks and legends of colors herein designated. Plumbing and heating piping in finished spaces such as offices and quarters shall not be color banded. Banding or blocking and legends shall be applied to the piping at locations as follows:

a. Adjacent to each valve.

b. Adjacent to each strainer.

c. Each branch and riser at take-off.

d. At each pipe passage through wall, floor and ceiling construction.

e. At each pipe passage to underground.

f. At not more than 40 feet spacing on straight pipe runs.

3.3 BAND OR BLOCK AND LETTER SIZE

The band or block and letter sizes corresponding to the applicable outside diameter of pipe or pipe covering shall be used. Upper case letters and Arabic numerals shall be used. Sizes are as follows:

Outside Diameter of Pipe or Covering	Width of Color Band or Block	Size of Legend Letters and Numerals
3/4" to 1 1/4"	8"	1/2"
1 1/2" to 2"	8"	3/4"
2 1/2" to 6"	12"	1 1/4"

3.4 LEGENDS

The applicable legends and bands or blocks shall be selected from the following:

Material	Title	Color Band or Block Letters	Background
Gas	Gas	Black	Yellow
Potable Water	Potable Water	Black	Green
Compressed Air	(1) Comp. Air_____#	Black	Green
Fire Protection Water	Fire Protection Water	White	Red
Domestic Hot Water	Dom Hot Water	Green	Yellow

(1) Include maximum working pressure.

-- End of Section --

SECTION 15250

THERMAL INSULATION FOR MECHANICAL SYSTEMS

PART 1 GENERAL

1.1 REFERENCES

The publications listed below form a part of this specification to the extent referenced. The publications are referred to in the text by basic designation only. At the discretion of the government, the manufacturer of any material supplied will be required to furnish test reports pertaining to any of the tests necessary to assure compliance with the standard or standards referenced in this specification.

AMERICAN SOCIETY FOR TESTING AND MATERIALS (ASTM)

ASTM A 167	(1996) Stainless and Heat-Resisting Chromium-Nickel Steel Plate, Sheet, and Strip
ASTM A 580	(1995a) Stainless and Heat-Resisting Steel Wire
ASTM B 209	(1996) Aluminum and Aluminum-Alloy Sheet and Plate
ASTM C 195	(1990) Mineral Fiber Thermal Insulating Cement
ASTM C 449	(1995) Mineral Fiber Hydraulic-Setting Thermal Insulating and Finishing Cement
ASTM C 533	(1985; R 1990) Calcium Silicate Block and Pipe Thermal Insulation
ASTM C 534	(1994) Preformed Flexible Elastomeric Cellular Thermal Insulation in Sheet and Tubular Form
ASTM C 547	(1995) Mineral Fiber Pipe Insulation
ASTM C 552	(1991) Cellular Glass Thermal Insulation
ASTM C 553	(1992) Mineral Fiber Blanket Thermal Insulation for Commercial and Industrial Applications
ASTM C 612	(1993) Mineral Fiber Block and Board Thermal Insulation
ASTM C 647	(1995) Properties and Tests of Mastics and Coating Finishes for Thermal Insulation
ASTM C 795	(1992) Thermal Insulation for Use in Contact With Austenitic Stainless Steel
ASTM C 916	(1985; Rev 1990) Adhesives for Duct Thermal Insulation
ASTM C 920	(1994) Elastomeric Joint Sealants
ASTM C 921	(1989 R; 1996) Determining the Properties of Jacketing Materials for Thermal Insulation

ASTM D 3278	(1989) Test Methods for Flash Point of Liquids by Setaflash Closed-Cup Apparatus
ASTM E 84	(1996a) Surface Burning Characteristics of Building Materials
ASTM E 96	(1995) Water Vapor Transmission of Materials

MANUFACTURERS STANDARDIZATION SOCIETY OF THE VALVE AND FITTINGS INDUSTRY (MSS)

MSS SP-69	(1996) Pipe Hangers and Supports - Selection and Application

MIDWEST INSULATION CONTRACTORS ASSOCIATION (MICA)

MICA-01	(1993) National Commercial Industrial Insulation Standards

1.2 SYSTEM DESCRIPTION

Field-applied insulation and accessories on mechanical systems shall be as specified herein; factory-applied insulation is specified under the piping, duct or equipment to be insulated.

1.3 GENERAL QUALITY CONTROL

1.3.1 Standard Products

Materials shall be the standard products of manufacturers regularly engaged in the manufacture of such products and shall essentially duplicate items that have been in satisfactory use for at least 2 years prior to bid opening.

1.3.2 Installer's Qualifications

Qualified installers shall have successfully completed three or more similar type jobs within the last 5 years.

1.3.3 Surface Burning Characteristics

Unless otherwise specified, insulation not covered with a jacket shall have a flame spread rating no higher than 75 and a smoke developed rating no higher than 150. The outside surface of insulation systems which are located in air plenums, in ceiling spaces, and in attic spaces shall have a flame spread rating no higher than 25 and a smoke developed rating no higher than 50. Insulation materials located exterior to the building perimeter are not required to be fire-rated. Flame spread and smoke developed ratings shall be determined by ASTM E 84. Insulation shall be tested in the same density and installed thickness as the material that shall be used in the actual construction. Jackets shall comply with the flame spread and smoke developed ratings of 25/50 as determined by ASTM E 84.

1.3.4 Identification of Materials

Packages or standard containers of insulation, jacket material, cements, adhesives, and coatings delivered for use, and samples required for approval shall have manufacturer's stamp or label attached giving the name of the manufacturer and brand, and a description of the material.

1.4 SUBMITTALS

Government approval is required for submittals with a "GA" designation; submittals having an "FIO" designation are for information only. The

following shall be submitted in accordance with Section 01330 SUBMITTAL PROCEDURES:

SD-14 Samples

Thermal Insulation Materials; FIO.

A complete list of materials, including manufacturer's descriptive technical literature, performance data, catalog cuts, and installation instructions. The product number, k-value, thickness and furnished accessories for each mechanical system requiring insulation shall be included. Materials furnished under this section of the specification shall be submitted at one time.

After approval of materials and prior to applying insulation a booklet shall be prepared and submitted for approval. The booklet shall contain marked-up MICA-01 plates (or detail drawings showing the insulation material and insulating system) for each pipe, duct, or piece of equipment which is/are required to be insulated per this specification. The MICA plates shall be marked-up showing the materials to be installed in accordance with the requirements of this specification for the specific insulation application. The Contractor shall submit all MICA Plates required to show the entire insulating system, including Plates required to show insulation penetrations as applicable. If the Contractor elects to submit detailed drawings instead of marked-up MICA Plates, the detail drawings shall show cut-away, section views, and details indicating each component of the insulation system and showing provisions for insulating jacketing, and sealing portions of the equipment. For each type of insulation installation on the drawings, provide a label which identifies each component in the installation (i.e., the duct, insulation, adhesive, vapor retarder, jacketing, tape, mechanical fasteners, etc.) Indicate insulation by type and manufacturer. Three copies of the booklet shall be submitted at the jobsite to the Contracting Officer. One copy of the approved booklet shall remain with the insulation Contractor's display sample and two copies shall be provided for Government use.

1.5 STORAGE

Materials shall be delivered in the manufacturer's unopened containers. Materials delivered and placed in storage shall be provided with protection from weather, humidity, dirt, dust and other contaminants by the Contractor. Insulation material and supplies that become dirty, dusty, wet, or otherwise contaminated may be rejected by the Contracting Officer.

PART 2 PRODUCTS

2.1 GENERAL MATERIALS

Materials shall be compatible and shall not contribute to corrosion, soften, or otherwise attack surfaces to which applied in either the wet or dry state. Materials to be used on stainless steel surfaces shall meet ASTM C 795 requirements. Materials shall be asbestos free and conform to the following:

2.1.1 Adhesives

2.1.1.1 Acoustical Lining Insulation Adhesive

Insulation shall be applied in cut-to-size pieces attached to the interior of the duct with a nonflammable, fire-resistant adhesive conforming to ASTM C 916, Type I. Exposed edges of the liner at the duct ends and at other joints where the lining will be subject to erosion shall be coated with a heavy brush coat of the nonflammable, fire-resistant adhesive to prevent delamination of glass fibers.

2.1.1.2 Mineral Fiber Insulation Cement

Cement shall be in accordance with ASTM C 195.

2.1.1.3 Lagging Adhesive

Lagging adhesives shall be nonflammable and fire-resistant and shall have flame spread and smoke developed ratings of 25/50 when measured in accordance with ASTM E 84. Adhesives shall be either the Class 1 or Class 2 type as defined here. Class 1 adhesive shall be pigmented red and be suitable for bonding fibrous glass cloth to faced and unfaced fibrous glass insulation board; for bonding cotton brattice cloth to faced and unfaced fibrous glass insulation board; for sealing edges of and bounding fibrous glass tape to joints of fibrous glass board; or for bonding lagging cloth to thermal insulation. Class 2 adhesive shall be pigmented white and be suitable for attaching fibrous glass insulation to metal surfaces. Lagging adhesives shall be applied in strict accordance with the manufacturer's recommendations.

2.1.2 Contact Adhesive

Adhesive may be dispersed in a nonhalogenated organic solvent with a low flash point (flash point less than minus 25 degrees F when tested in accordance with ASTM D 3278) or, dispersed in a nonflammable organic solvent which shall not have a fire point below 200 degrees F. The adhesive shall not adversely affect, initially or in service, the insulation to which it is applied, nor shall it cause any corrosive effect on metal to which it is applied. Any solvent dispersing medium or volatile component of the adhesive shall have no objectionable odor and shall not contain any benzene or carbon tetrachloride. The dried adhesive shall not omit nauseous, irritating, or toxic volatile matters or aerosols when the adhesive is heated to any temperature up to 212 degrees F. The adhesive shall be nonflammable and fire resistant.

2.1.3 Caulking

ASTM C 920, Type S, Grade NS, Class 25, Use A.

2.1.4 Corner Angles

Nominal 0.016 inch aluminum 1 x 1 inch with factory applied kraft backing. Aluminum shall be ASTM B 209, Alloy 3003, 3105, or 5005.

2.1.5 Finishing Cement

Mineral fiber hydraulic-setting thermal insulating cement ASTM C 449.

2.1.6 Fibrous Glass Cloth and Glass Tape

Fibrous glass cloth and glass tape shall have flame spread and smoke developed ratings of no greater than 25/50 when measured in accordance with ASTM E 84. Fibrous glass cloth and tape; 20 x 20 maximum size mesh. Tape shall be 4 inch wide rolls. Class 3 tape shall be 4.5 ounces per square yard.

2.1.7 Staples

Outward clinching type ASTM A 167, Type 304 or 316 stainless steel.

2.1.8 Jackets

ASTM C 921, Type I, maximum moisture vapor transmission 0.02 perms, minimum puncture resistance 50 Beach units on all surfaces except concealed ductwork, where a minimum puncture resistance of 25 Beach units is acceptable. Minimum tensile strength, 35 pound/inch width. ASTM C 921, Type II, minimum puncture resistance 25 Beach units, tensile strength

minimum 20 pound/inch width. Jackets used on insulation exposed in finished areas shall have white finish suitable for painting without sizing.

2.1.8.1 White Vapor Retarder ASJ (All Service Jacket)

For use on hot/cold pipes, ducts, or equipment. Vapor retarder jackets used on insulation exposed in finished areas shall have white finish suitable for painting without sizing.

2.1.8.2 Aluminum Jackets

Aluminum jackets shall be corrugated, embossed or smooth sheet, 0.016 inch nominal thickness; ASTM B 209, Temper H14, Temper H16, Alloy 3003, 5005, or 3105 with factory applied moisture retarder. Corrugated aluminum jacket shall not be used outdoors. Aluminum jacket securing bands shall be Type 304 stainless steel, 0.015 inch thick, 1/2 inch wide for pipe under 12 inch diameter and 3/4 inch wide for pipe over 12 inch diameter. Aluminum jacket circumferential seam bands shall be 2 x 0.016 inch aluminum matching jacket material. Bands for insulation below ground shall be 3/4 x 0.020 inch) thick stainless steel, or fiberglass reinforced tape. The jacket may, at the option of the Contractor, be provided with a factory fabricated Pittsburg or "Z" type longitudinal joint. When the "Z" joint is used, the bands at the circumferential joints shall be designed by the manufacturer to seal the joints and hold the jacket in place.

2.1.8.3 Polyvinyl Chloride (PVC) Jackets

Polyvinyl chloride (PVC) jacket and fitting covers shall have high impact strength, UV resistant rating or treatment and moderate chemical resistance with minimum thickness 0.030 inch. Insulation under PVC jacket shall meet jacket manufacturer's written recommendations.

2.1.9 Vapor Retarder Coating

The vapor retarder coating shall be fire and water resistant and appropriately selected for either outdoor or indoor service. Color shall be white. The water vapor permeance of the compound shall not exceed 0.05 perm and shall be determined according to procedure B of ASTM E 96 utilizing apparatus described in ASTM E 96. The coating shall be a nonflammable, fire resistant type. The flash point of the compound shall not be less than 80 degrees F and shall be determined in accordance with ASTM D 3278. All other application and service properties shall be in accordance with ASTM C 647.

2.1.10 Wire

Soft annealed ASTM A 580 Type 302, 304 or 316 stainless steel, 16 or 18 gauge.

2.2 PIPE INSULATION MATERIALS

Pipe insulation materials shall be as follows:

2.2.1 Aboveground Cold Pipeline

Insulation for minus 30 degrees to Plus 60 degrees F shall be as follows:

2.2.1.1 Cellular Glass

ASTM C 552, Type II, and Type III.

2.2.1.2 Flexible Cellular Insulation

ASTM C 534, Type I or II. Type II shall have vapor retarder skin on both sides of the insulation.

2.2.2 Aboveground Hot Pipeline

For aboveground hot pipeline above 60 degrees F insulation the following requirements shall be met.

2.2.2.1 Mineral Fiber

ASTM C 547, Class 1 or Class 2 as required for the operating temperature range.

2.2.2.2 Calcium Silicate

ASTM C 533, Type I indoor only, or outdoors above 250 degrees F pipe temperature.

2.2.2.3 Cellular Glass

ASTM C 552, Type II and Type III.

2.2.2.4 Flexible Cellular Insulation

ASTM C 534, Type I or II to 200 degrees F service.

2.3 DUCT INSULATION MATERIALS

Duct insulation materials shall be as follows:

2.3.1 Rigid Mineral Fiber

ASTM C 612, Class 1.

2.3.2 Flexible Mineral Fiber

ASTM C 553, Type I, Class B-2.

2.3.3 Cellular Glass

ASTM C 552, Type I.

2.3.4 Flexible Cellular

ASTM C 534 Type II.

PART 3 EXECUTION

3.1 APPLICATION - GENERAL

3.1.1 Installation

Except as otherwise specified, material shall be installed in accordance with the manufacturer's written instructions. Insulation materials shall not be applied until tests specified in other sections of this specification are completed. Material such as rust, scale, dirt and moisture shall be removed from surfaces to receive insulation. Insulation shall be kept clean and dry. Insulation shall not be removed from its shipping containers until the day it is ready to use and shall be returned to like containers or equally protected from dirt and moisture at the end of each workday. Insulation that becomes dirty shall be thoroughly cleaned prior to use. If insulation becomes wet or if aforementioned cleaning does not restore the surfaces to like new condition, the insulation will be rejected, and shall be immediately removed from the jobsite. Joints shall be staggered on multi layer insulation. Mineral fiber thermal insulating cement shall be mixed with demineralized water when used on stainless steel surfaces. Insulation, jacketing and accessories shall be installed in accordance with MICA-01 standard plates except where modified herein or on

the drawings.

3.1.2 Fire stopping

Where pipes and ducts pass through fire walls, fire partitions, above grade floors, and fire rated chase walls, the penetration shall be sealed with Fire stopping materials as specified in Section 07270 FIRE STOPPING.

3.1.3 Painting and Finishing

Painting shall be as specified in Section 09900 PAINTING, GENERAL.

3.1.4 Flexible Cellular Insulation

Flexible cellular insulation shall be installed with seams and joints sealed with a contact adhesive. Flexible cellular insulation shall not be used on surfaces greater than 200 degrees F. Seams shall be staggered when applying multiple layers of insulation. Insulation exposed to weather and not shown to have jacketing shall be protected with two coats of UV resistant finish as recommended by the manufacturer after the adhesive is dry.

3.1.5 Welding

No welding shall be done on piping, duct or equipment without written approval of the Contracting Officer. The capacitor discharge welding process may be used for securing metal fasteners to duct.

3.1.6 Pipes/Ducts/Equipment which Require Insulation

Insulation is required, unless stated otherwise, on all pipes, ducts, or equipment, which operate at or below 60 F and at or above 80 F.

3.2 PIPE INSULATION INSTALLATION

3.2.1 Pipe Insulation

3.2.1.1 General

Pipe insulation shall be installed on aboveground hot and cold pipeline systems as specified below to form a continuous thermal retarder, including straight runs, fittings and appurtenances unless specified otherwise. Installation shall be with full length units of insulation and using a single cut piece to complete a run. Cut pieces or scraps abutting each other shall not be used. Pipe insulation shall be omitted on the following:

a. Pipe used solely for fire protection.

b. Chromium plated pipe to plumbing fixtures. However, fixtures for use by the physically handicapped shall have the hot water supply and drain, including the trap, insulated where exposed.

c. Sanitary drain lines.

d. Unions in pipe above 60 degrees F.

e. Strainers in pipe above 60 degrees F.

f. Check valves in pipe above 60 degrees F.

g. Air chambers.

3.2.1.2 Pipes Passing Through Sleeves

a. Pipe insulation shall be continuous through the sleeve.

b. An aluminum jacket with factory applied moisture retarder shall be provided over the insulation wherever penetrations require sealing.

c. Where penetrating interior walls, the aluminum jacket shall extend 2 inches beyond either side of the wall and shall be secured on each end with a band.

d. Where penetrating exterior walls, the aluminum jacket required for pipe exposed to weather shall continue through the sleeve to a point 2 inches beyond the interior surface of the wall.

e. In high abuse areas such as janitor closets and traffic areas in equipment rooms, kitchens, and mechanical rooms, aluminum jackets shall be utilized. Pipe insulation to the 5 ft level shall be protected.

3.2.1.3 Pipes Passing Through Hangers

a. Insulation, whether hot or cold application, shall be continuous through hangers. All horizontal pipes 2 inches and smaller shall be supported on hangers with the addition of a Type 40 protection shield to protect the insulation in accordance with MSS SP-69.

b. Vertical pipes shall be supported with either Type 8 or Type 42 riser clamps with the addition of two Type 40 protection shields in accordance with MSS SP-69 covering the 360 degree arc of the insulation. An insulation insert of cellular glass or calcium silicate shall be installed between each shield and the pipe. The insert shall cover the 360 degree arc of the pipe. Inserts shall be the same thickness as the insulation, and shall extend 2 inches on each end beyond the protection shield. When insulation inserts are required per the above, and the insulation thickness is less than 1 inch, wooden or cork dowels or blocks may be installed between the pipe and the shield to prevent the hanger from crushing the insulation as an option instead of installing insulation inserts. The insulation jacket shall be continuous over the wooden dowel, wooden block, or insulation insert. The vertical weight of the pipe shall be supported with hangers located in a horizontal section of the pipe.

e. Inserts shall be covered with a jacket material of the same appearance and quality as the adjoining pipe insulation jacket, shall overlap the adjoining pipe jacket 1-1/2 inches, and shall be sealed as required for the pipe jacket. The jacket material used to cover inserts in flexible cellular insulation shall conform to ASTM C 921, Type 1, and is allowed to be of a different material than the adjoining insulation material.

3.2.1.4 Pipes Passing Through Walls

a. For hot water pipes supplying lavatories or other similar heated service which requires insulation, the insulation shall be terminated on the backside of the finished wall. The insulation termination shall be protected with two coats of vapor barrier coating with a minimum total thickness of 1/16 inch applied with glass tape embedded between coats (if applicable). The coating shall extend out onto the insulation 2 inches and shall seal the end of the insulation. Glass tape seams shall overlap 1 inch. Caulk the annular space between the pipe and wall penetration. Cover the pipe and wall penetration with a properly sized (well fitting) escutcheon plate. The escutcheon plate shall overlap the wall penetration at least 3/8 inch.

b. For domestic cold water pipes requiring insulation, the insulation shall be terminated on the finished side of the wall (i.e. insulation must cover the pipe throughout the wall penetration). The insulation shall be protected with two coats of vapor barrier coating with a minimum total thickness of 1/16 inch. The coating shall extend out onto the insulation 2 inches and shall seal the end of the insulation. Caulk the annular space

between the pipe and wall penetration. Cover the pipe and wall penetration with a properly sized (well fitting) escutcheon plate. The escutcheon plate shall overlap the wall penetration by at least 3/8 inch.

3.2.1.5 Flexible Cellular Pipe Insulation

Flexible cellular pipe insulation shall be tubular form. Sweat fittings shall be insulated with miter-cut pieces the same size as on adjacent piping. Screwed fittings shall be insulated with sleeved fitting covers fabricated from miter-cut pieces and shall be overlapped and sealed to the adjacent pipe insulation.

3.2.2 Aboveground Cold Pipelines

The following shall be included for aboveground cold pipelines minus 30 degrees to plus 60 degrees F:

a. Domestic cold water.

b. Refrigerant suction lines.

g. Air conditioner condensate drains.

3.2.2.1 Insulation Thickness

Insulation thickness for cold pipelines shall be determined using Table I.

Table I - Cold Piping Insulation Thickness
Pipe Size (inches)

Type of Service	Material	Runouts up to 2 in*	1 in less	1.25 - 2 in	2.5 - 4 in
Refrigerant suction piping	CG		1.5	1.5	1.5
	FC		1.0	1.0	1.0
	PF		1.0	1.0	1.0
Cold domestic water, above and below ceilings	CG	1.5	1.5	1.5	1.5
	FC	3/8	3/8	3/8	3/8
	PF	3/8	3/8	3/8	3/8
Exposed lavatory drains exposed domestic water piping drains to areas for handicap personnel	FC	0.5	0.5	0.5	0.5
	MF	0.5	1.0	1.0	1.5

*When runouts to terminal units exceed 12 feet, the entire length of runoutshall be insulated like main feed pipe.

LEGEND:

PF - Phenolic Foam
CG - Cellular Glass
CS - Calcium Silicate
MF - Mineral Fiber
FC - Flexible Cellular

3.2.2.2 Jacket for Fibrous, Cellular Glass, and Phenolic Foam Insulated Pipe

Insulation shall be covered with a factory applied vapor retarder jacket or field applied seal welded PVC jacket. Insulation inside the building specified to be protected with an aluminum jacket shall have the insulation and vapor retarder jacket installed as specified herein. The aluminum jacket shall be installed as specified for piping exposed to weather, except sealing of the laps of the aluminum jacket is not required. In high abuse areas such as janitor closets and traffic areas in equipment rooms, kitchens, and mechanical rooms, aluminum jackets shall be utilized. Pipe insulation to the 5 ft level will be protected.

3.2.2.3 Insulation for Straight Runs (Fibrous and Cellular Glass)

a. Insulation shall be applied to the pipe with joints tightly butted. The ends of fibrous insulation shall be sealed off with vapor retarder coating at intervals not to exceed 15 feet.

b. Longitudinal laps of the jacket material shall overlap not less than 1-1/2 inches. Butt strips 3 inches wide shall be provided for circumferential joints.

c. Laps and butt strips shall be secured with adhesive and stapled on 4 inch centers if not factory self-sealing.

d. Factory self-sealing lap systems may be used when the ambient temperature is between 40 degrees and 120 degrees F during installation. The lap system shall be installed in accordance with manufacturer's recommendations. Stapler shall be used only if specifically recommended by the manufacturer. Where gaps occur, the section shall be replaced or the gap repaired by applying adhesive under the lap and then stapling.

e. All Staples, including those used to repair factory self-seal lap systems, shall be coated with a vapor retarder coating. All seams, except those on factory self-seal systems shall be coated with vapor retarder coating.

f. Breaks and punctures in the jacket material shall be patched by wrapping a strip of jacket material around the pipe and securing it with adhesive, stapling, and coating with vapor retarder coating. The patch shall extend not less than 1-1/2 inches past the break.

g. At penetrations such as thermometers, the voids in the insulation shall be filled and sealed with vapor retarder coating.

3.2.2.4 Insulation for Fittings and Accessories

a. Pipe insulation shall have ends thoroughly coated with a vapor retarder coating not less than 6 inches from each flange, union, valve, anchor, or fitting in all directions.

b. Precut, preformed insulation for placement over fittings, flanges, unions, valves, anchors, and mechanical couplings shall be used. Precut, preformed insulation shall exhibit the same properties as the adjoining pipe insulation. Where precut/preformed is unavailable, rigid preformed pipe insulation sections may be segmented into the shape required. Insulation of the same thickness and conductivity as the adjoining pipe insulation shall be used. If nesting size insulation is used, the insulation should be overlapped 2 inches or one pipe diameter. Loose fill mineral fiber or insulating cement shall be used to fill the voids. Elbows insulated using segments shall not have less than 3 segments per elbow.

c. Upon completion of installation of insulation on flanges, unions, valves, anchors, fittings and accessories, terminations and insulation not protected by factory vapor retarder jackets or PVC fitting covers shall be protected with two coats of vapor retarder coating with a minimum total

thickness of 1/16 inch, applied with glass tape embedded between coats. Tape seams shall overlap 1 inch. The coating shall extend out onto the adjoining pipe insulation 2 inches.

d. Anchors attached directly to the pipe shall be insulated for a sufficient distance to prevent condensation but not less than 6 inches from the insulation surface.

e. Insulation shall be marked showing the location of unions, strainers, and check valves.

3.2.2.5 Optional PVC Fitting Covers

At the option of the Contractor, premolded, one or two piece PVC fitting covers may be used in lieu of the vapor retarder and embedded glass tape. Factory premolded insulation segments shall be used under the fitting covers for elbows. Insulation segments shall be the same thickness as adjoining pipe insulation and the insulation shall be protected with one coat of vapor retarder coating under the PVC cover. The covers shall be secured by PVC vapor retarder tape, adhesive, seal-welding or with tacks made for securing PVC covers. Seams in the cover, and tacks and laps to adjoining pipe insulation jacket, shall be sealed with vapor retarder tape to ensure that the assembly has a continuous vapor seal.

3.2.3 Aboveground Hot Pipelines

For hot pipelines above 60 degrees F the following shall be included:

a. Domestic hot water.

3.2.3.1 Insulation Thickness

Insulation thickness for hot pipelines shall be determined using Table II.

Table II - Hot Piping Insulation Thickness

Type of Service (degrees F)	Material	Runouts up to 2 in	Pipe Size (inches) 1 in less	1.25 - 2 in	2.5 - 4 in
Hot domestic water supply recirculating system (200 F max)	CG	1.5	1.5	1.5	1.5
	FC	0.5	1.0	1.0	1.5
	PF	0.5	1.0	1.0	1.0
	MF	0.5	1.0	1.0	1.5

*When runouts to terminal units exceed 12 feet, the entire length of runout shall be insulated like the main feed pipe.

LEGEND:

PF - Phenolic Foam
CG - Cellular Glass
CS - Calcium Silicate
MF - Mineral Fiber
FC - Flexible Cellular

3.2.3.2 Jacket for Insulated Pipe

Insulation shall be covered, in accordance with manufacturer's recommendations, with a factory applied Type II jacket or field applied aluminum where required or seal welded PVC.

3 Insulation for Straight Runs

a. Insulation shall be applied to the pipe with joints tightly butted.

b. Longitudinal laps of the jacket material shall overlap not less than 1-1/2 inches, and butt strips 3 inches wide shall be provided for circumferential joints.

c. Laps and butt strips shall be secured with adhesive and stapled on 4 inch centers if not factory self-sealing. Adhesive may be omitted where pipe is concealed.

d. Factory self-sealing lap systems may be used when the ambient temperature is between 40 degrees and 120 degrees F and shall be installed in accordance with manufacturer's instructions. Laps and butt strips shall be stapled whenever there is nonadhesion of the system. Where gaps occur, the section shall be replaced or the gap repaired by applying adhesive under the lap and then stapling.

e. Breaks and punctures in the jacket material shall be patched by wrapping a strip of jacket material around the pipe and be secured with adhesive and stapled on 4 inch centers if not factory self-sealing. Adhesive may be omitted where pipe is concealed. Patch shall extend not less than 1-1/2 inches past the break.

f. Install flexible cellular pipe insulation by slitting tubular sections and applying onto piping or tubing. Alternately, whenever possible, slide unslit sections over the open ends of piping or tubing. All seams and butt joints shall be secured and sealed with adhesive. When using self seal products only the butt joints shall be secured with adhesive. Insulation shall be pushed on the pipe, never pulled. Stretching of insulation may result in open seams and joints. All edges shall be clean cut. Rough or jagged edges of the insulation shall not be

permitted. Proper tools such as sharp knives must be used. Type II sheet insulation when used on pipe larger than 6 inches shall not be stretched around the pipe. On pipes larger than 12 inches, adhere sheet insulation directly to the pipe on the lower 1/3 of the pipe.

3.2.3.3 Insulation for Fittings and Accessories

a. The run of the line pipe insulation shall have the ends brought up to the item.

b. Insulation of the same thickness and conductivity as the adjoining pipe insulation, either premolded or segmented, shall be placed around the item abutting the adjoining pipe insulation, or if nesting size insulation is used, overlapping 2 inches or one pipe diameter. Loose fill mineral fiber or insulating cement shall be used to fill the voids. Insulation for elbows less than 3 inch size shall be premolded. Insulation for elbows 3 inch size and larger shall be either premolded or segmented. Elbows insulated using segments shall have not less than 3 segments per elbow. Insulation may be wired or taped on until finish is applied.

c. Upon completion of installation of insulation on flanges, unions, valves, anchors, fittings and accessories, terminations and insulation not protected by factory vapor retarder jackets or PVC fitting covers shall be protected with two coats of Class 1 adhesive applied with glass tape embedded between coats. Tape seams shall overlap 1 inch. Adhesive shall extend onto the adjoining insulation not less than 2 inches. The total dry film thickness shall be not less than 1/16 inch.

d. Insulation terminations shall be tapered to unions at a 45-degree angle.

e. At the option of the Contractor, factory premolded one- or two-piece PVC fitting covers may be used in lieu of the adhesive and embedded glass tape. Factory premolded segments or factory or field cut blanket insert insulation segments shall be used under the cover and shall be the same thickness as adjoining pipe insulation. The covers shall be secured by PVC vapor retarder tape, adhesive, seal-welding or with tacks made for securing PVC covers.

3.2.4 Piping Exposed to Weather

Piping exposed to weather shall be insulated and jacketed as specified for the applicable service inside the building. After this procedure, an aluminum jacket shall be applied. PVC jacketing requires no factory applied jacket beneath it. Flexible cellular insulation exposed to weather shall be treated in accordance with paragraph FLEXIBLE CELLULAR INSULATION.

3.2.5 Aluminum Jacket

The jacket for hot piping may be factory applied. The jacket shall overlap not less than 2 inches at longitudinal and circumferential joints and shall be secured with bands at not more than 12 inch centers. Longitudinal joints shall be overlapped down to shed water and located at 4 or 8 o'clock positions. Joints on piping 60 degrees F and below shall be sealed with caulking while overlapping to prevent moisture penetration. Where jacketing on piping 60 degrees F and below abuts an uninsulated surface, joints shall be caulked to prevent moisture penetration. Joints on piping above 60 degrees F shall be sealed with a moisture retarder.

3.2.6 Insulation for Fittings

Flanges, unions, valves, fittings, and accessories shall be insulated and finished as specified for the applicable service. Two coats of an emulsion type weatherproof mastic recommended by the insulation manufacturer shall be applied with glass tape embedded between coats. Tape overlaps shall be not less than 1 inch and the adjoining aluminum jacket not less than 2

inches. Factory preformed aluminum jackets may be used in lieu of the above. Molded PVC fitting covers shall be used with PVC lagging and adhesive welded moisture tight.

3.2.7 PVC Lagging

PVC lagging shall be ultraviolet resistant and adhesive welded vapor tight with manufacturer's recommended adhesive. Installation shall include provision for thermal expansion.

3.3 DUCT INSULATION INSTALLATION

Corner angles shall be installed on external corners of insulation on ductwork in exposed finished spaces before covering with jacket.

3.3.1 Duct Insulation Thickness

Table III - Minimum Duct Insulation (inches)

Cold Air Ducts	2.0
Fresh Air Intake Ducts	1.5
Warm Air Ducts	2.0
Fresh Air Intake Ducts	1.5

3.3.2 Insulation and Vapor Retarder for Cold Air Duct

Insulation and vapor retarder for cold air duct below 60 degrees F: Ducts and associated equipment shall be insulated to a thickness which is in accordance with Table III. The following shall be insulated:

a. Supply ducts.

b. Return air ducts.

c. Plenums.

d. Coil casings.

e. Fresh air intake ducts.

Insulation for rectangular ducts shall be flexible type where concealed, minimum density 3/4 pcf and rigid type where exposed, minimum density 3 pcf. Insulation for round/oval ducts shall be flexible type, minimum density 3/4 pcf with a factory Type I jacket; or, a semi rigid board, minimum density 3 pcf, formed or fabricated to a tight fit, edges beveled and joints tightly butted and staggered, with a factory applied Type I all service jacket. Insulation for exposed ducts shall be provided with either a white, paintable, factory-applied Type I jacket or a vapor retarder jacket coating finish as specified. Fibrous and cellular glass insulation on concealed duct shall be provided with a factory-applied Type I vapor retarder jacket. The total dry film thickness shall be approximately 1/16 inch. Duct insulation shall be continuous through sleeves and prepared openings except fire wall penetrations. Duct insulation terminating at fire dampers, shall be continuous over the damper collar and retaining angle of fire dampers, which are exposed to unconditioned air and which may be prone to condensate formation. Duct insulation and vapor retarder shall cover the collar, neck, and any uninsulated surfaces of diffusers, registers and grills. Vapor retarder materials shall be applied to form a complete unbroken vapor seal over the insulation.

3.3.2.1 Installation on Concealed Duct

a. For rectangular, oval or round ducts, insulation shall be attached by applying Class 2 adhesive around the entire perimeter of the duct in 6 inch wide strips on 12 inch centers.

b. For rectangular and oval ducts, 24 inches and larger insulation shall be additionally secured to bottom of ducts by the use of mechanical fasteners. Fasteners shall be spaced on 18 inch centers and not more than 18 inches from duct corners.

c. For rectangular, oval and round ducts, mechanical fasteners shall be provided on sides of duct risers for all duct sizes. Fasteners shall be spaced on 18 inch centers and not more than 18 inches from duct corners.

d. Insulation shall be impaled on the mechanical fasteners where used and shall be pressed thoroughly into the adhesive. Care shall be taken to ensure vapor retarder jacket joints overlap 2 inches. The insulation shall not be compressed to a thickness less than that specified. Insulation shall be carried over standing seams and trapeze-type duct hangers.

e. Self-locking washers shall be installed where mechanical fasteners are used. The pin shall be trimmed back and bent over.

f. Jacket overlaps shall be secured under the overlap with Class 2 adhesive and stapled on 4 inch centers. Staples and seams shall be coated with a brush coat of vapor retarder coating.

g. Breaks in the jacket material shall be covered with patches of the same material as the vapor retarder. The patches shall extend not less than 2 inches beyond the break or penetration in all directions and shall be secured with Class 2 adhesive and staples. Staples and joints shall be sealed with a brush coat of vapor retarder coating.

h. At jacket penetrations such as hangers thermometers and damper operating rods, voids in the insulation shall be filled and the penetration sealed with a brush coat of vapor retarder coating.

i. Insulation terminations and pin punctures shall be sealed and flashed with a reinforced vapor retarder coating finish. The coating shall overlap the adjoining insulation and uninsulated surface 2 inches. Pin puncture coatings shall extend 2 inches from the puncture in all directions.

j. Where insulation standoff brackets occur, insulation shall be extended under the bracket and the jacket terminated at the bracket.

3.3.2.2 Installation on Exposed Duct Work

a. For rectangular ducts, rigid insulation shall be secured to the duct by mechanical fasteners on all four sides of the duct, spaced not more than 12 inches apart and not more than 3 inches from the edges of the insulation joints. A minimum of two rows of fasteners shall be provided for each side of duct 12 inches and larger. One row shall be provided for each side of duct less than 12 inches.

b. Duct insulation shall be formed with minimum jacket seams. Each piece of rigid insulation shall be fastened to the duct using mechanical fasteners. When the height of projections is less than the insulation thickness, insulation shall be brought up to standing seams, reinforcing, and other vertical projections and shall not be carried over. Vapor retarder jacket shall be continuous across seams, reinforcing, and projections. When height of projections is greater than the insulation thickness, insulation and jacket shall be carried over.

c. Insulation shall be impaled on the fasteners; self-locking washers shall be installed and the pin trimmed and bent over.

d. Joints in the insulation jacket shall be sealed with a 4 inch wide strip of the same material as the vapor retarder jacket. The strip shall be secured with Class 2 adhesive and stapled. Staples and seams shall be sealed with a brush coat of vapor retarder coating.

e. Breaks and ribs or standing seam penetrations in the jacket material shall be covered with a patch of the same material as the jacket. Patches shall extend not less than 2 inches beyond the break or penetration and shall be secured with Class 2 adhesive and stapled. Staples and joints shall be sealed with a brush coat of vapor retarder coating.

f. At jacket penetrations such as hangers, thermometers, and damper operating rods, the voids in the insulation shall be filled and the penetrations sealed with a brush coat of vapor retarder coating.

g. Insulation terminations and pin punctures shall be sealed and flashed with a reinforced vapor retarder coating finish. The coating shall overlap the adjoining insulation and uninsulated surface 2 inches. Pin puncture coatings shall extend 2 inches from the puncture in all directions.

3.3.3 Ducts Handling Air for Dual Purpose

For air handling ducts for dual purpose below and above 60 degrees F, ducts shall be insulated as specified for cold air duct.

3.3.4 Duct Test Holes

After duct systems have been tested, adjusted, and balanced, breaks in the insulation and jacket shall be repaired in accordance with the applicable section of this specification for the type of duct insulation to be repaired.

-- End of Section --

SECTION 15330

WET PIPE SPRINKLER SYSTEM, FIRE PROTECTION

PART 1 GENERAL

1.1 REFERENCES

The publications listed below form a part of this specification to the extent referenced. The publications are referred to in the text by basic designation only.

AMERICAN SOCIETY FOR TESTING AND MATERIALS (ASTM)

ASTM A 47	(1990) Ferritic Malleable Iron Castings
ASTM A 53	(1995a) Pipe, Steel, Black and Hot-Dipped, Zinc-Coated Welded and Seamless
ASTM A 135	(1993) Electric-Resistance-Welded Steel Pipe
ASTM A 183	(1983; R 1990) Carbon Steel Tract Bolts and Nuts
ASTM A 536	(1984; R 1993) Ductile Iron Castings
ASTM A 795	(1995) Black and Hot-Dipped Zinc-Coated (Galvanized) Welded and Seamless Steel Pipe for Fire Protection Use

AMERICAN SOCIETY OF MECHANICAL ENGINEERS (ASME)

ASME B16.1	(1989) Cast Iron Pipe Flanges and Flanged Fittings
ASME B16.3	(1992) Malleable Iron Threaded Fittings
ASME B16.4	(1992) Cast Iron Threaded Fittings
ASME B16.9	(1993) Factory-Made Wrought Steel Buttwelding Fittings
ASME B16.11	(1991) Forged Fittings, Socket-Welding and Threaded
ASME B16.21	(1992) Nonmetallic Flat Gaskets for Pipe Flanges
ASME B18.2.1	(1981; Supple 1991; R 1992) Square and Hex Bolts and Screws (Inch Series)
ASME B18.2.2	(1987; R 1993) Square and Hex Nuts (Inch Series)

AMERICAN SOCIETY OF SANITARY ENGINEERING (ASSE)

ASSE 1015	(1993) Double Check Backflow Prevention Assembly

AMERICAN WATER WORKS ASSOCIATION (AWWA)

AWWA-10062JU	(1992) Standard Methods for the Examination of Water and Wastewater

AWWA B300	(1992) Hypochlorites
AWWA B301	(1992) Liquid Chlorine
AWWA C104	(1990) Cement-Mortar Lining for Ductile-Iron Pipe and Fittings for Water
AWWA C110	(1993) Ductile-Iron and Gray-Iron Fittings, 3 In. Through 48 In. (75 mm through 1200 mm), for Water and Other Liquids
AWWA C111	(1990) Rubber-Gasket Joints for Ductile-Iron Pressure Pipe and Fittings
AWWA C151	(1991) Ductile-Iron Pipe, Centrifugally Cast, for Water or Other Liquids
AWWA C203	(1991) Coal-Tar Protective Coatings and Linings for Steel Water Pipelines - Enamel and Tape - Hot-Applied
AWWA M20	(1973) Manual: Water Chlorination Principles and Practices

FACTORY MUTUAL ENGINEERING AND RESEARCH (FM)

FM P7825	(1995; Supple I; Supple II; Supple III) Approval Guide

NATIONAL FIRE PROTECTION ASSOCIATION (NFPA)

NFPA 13	(1994) Installation of Sprinkler Systems
NFPA 24	(1995) Installation of Private Fire Service Mains and Their Appurtenances
NFPA 1963	(1993) Fire Hose Connections

NATIONAL INSTITUTE FOR CERTIFICATION IN ENGINEERING TECHNOLOGIES (NICET)

NICET 1014	(1995) Program Detail Manual for Certification in the Field of Fire Protection Engineering Technology (Field Code 003) Automatic Sprinkler System Layout

UNDERWRITERS LABORATORIES (UL)

UL-01	(1996) Building Materials Directory
UL-04	(1996; Supple) Fire Protection Equipment Directory

1.2 GENERAL REQUIREMENTS

Wet pipe sprinkler system shall be provided in areas indicated on the drawings. The sprinkler system shall provide fire sprinkler protection for the entire area. Except as modified herein, the system shall be designed and installed in accordance with NFPA 13. Pipe sizes which are not indicated on drawings shall be determined by hydraulic calculation.

1.2.1 Hydraulic Design

The system shall be hydraulically designed to discharge at the minimum density indicated over the entire system area. The minimum pipe size for

branch lines in gridded systems shall be 1-1/4 inch. Hydraulic calculations shall be in accordance with the Area/Density Method of NFPA 13. Pipes shall be sized to limit the velocity of water to a maximum of 15 feet per second.

1.2.1.1 Hose Demand

An allowance for exterior hose streams of 500 gpm shall be added to the sprinkler system demand at the point of connection to the existing system.

1.2.1.2 Basis for Calculations

The design of the system shall be based upon the water supply indicated. Water supply shall be presumed available at the point of connection to existing. Hydraulic calculations shall be based upon the Hazen-Williams formula with a "C" value of 120 for steel piping, 150 for copper tubing, 140 for new cement-lined ductile-iron piping, and 100 for existing underground piping.

1.2.2 Sprinkler Spacing

Sprinklers shall be uniformly spaced on branch lines. Maximum spacing per sprinkler shall not exceed limits specified in NFPA 13 for ordinary hazard occupancy.

1.3 SUBMITTALS

Government approval is required for submittals with a "GA" designation; submittals having an "FIO" designation are for information only. Submittals related to system configuration, hydraulic calculations, and equipment selection, including manufacturer's catalog data, working drawings, connection drawings, control diagrams and certificates shall be submitted concurrently as a complete package. The package will be reviewed by the U.S. Army Engineer District Fire Protection Engineer. The following shall be submitted in accordance with Section 01330 SUBMITTAL PROCEDURES:

SD-01 Data

Load Calculations for Sizing Sway Bracing

For systems that are required to be protected against damage from earthquakes, load calculations shall be provided for sizing of sway bracing.

Sprinkler System Equipment; GA.

Manufacturer's Catalog Data for each separate piece of equipment proposed for use in the system. Data shall indicate the name of the manufacturer of each item of equipment, with data highlighted to indicate model, size, options, etc. proposed for installation. In addition, a complete equipment list which includes equipment description, model number and quantity shall be provided.

Hydraulic Calculations; GA.

Hydraulic calculations, including a drawing showing hydraulic reference points and pipe segments.

SD-04 Drawings

Sprinkler System Shop Drawings; GA.

Detail drawings conforming to the requirements established for working plans as prescribed in NFPA 13. Drawings shall include plan and elevation

views which establish that the equipment will fit the allotted spaces with clearance for installation and maintenance. Each set of drawings shall include the following:

a. Descriptive index of drawings in the submittal with drawings listed in sequence by drawing number. A legend identifying device symbols, nomenclature, and conventions used.

b. Floor plans drawn to a scale not less than 1/4"=1'-0" which clearly show locations of sprinklers, risers, pipe hangers, seismic separation assemblies, sway bracing, inspector's test connections, drains, and other applicable details necessary to clearly describe the proposed arrangement. Each type of fitting used and the locations of bushings, reducing couplings, and welded joints shall be indicated.

c. Actual center-to-center dimensions between sprinklers on branch lines and between branch lines; from end sprinklers to adjacent walls; from walls to branch lines; from sprinkler feed mains, cross-mains and branch lines to finished floor and roof or ceiling.

d. Longitudinal and transverse building sections showing typical branch line and cross-main pipe routing as well as elevation of each typical sprinkler above finished floor.

e. Details of each type of riser assembly; pipe hanger; sway bracing for earthquake protection, and restraint of underground water main at point-of-entry into the building, and electrical devices and interconnecting wiring.

As-Built Drawings; GA.

As-built drawings, no later than 14 working days after completion of the Final Tests. The sprinkler system shop drawings shall be updated to reflect as-built conditions after work is completed and shall be on reproducible full-size mylar film.

SD-06 Instructions

Test Procedures; GA.

Proposed test procedures for piping hydrostatic test, testing of alarms, at least 14 days prior to the start of related testing.

SD-07 Schedules

Preliminary Tests; GA.

A schedule of preliminary tests, at least 14 days prior to the proposed start of the tests.

Final Test; GA.

Upon successful completion of tests specified under PRELIMINARY TESTS, written notification shall be given to the Contracting Officer of the date for the final acceptance test. Notification shall be provided at least 14 days prior to the proposed start of the test. Notification shall include a copy of the Contractor's Material Test Certificates.

SD-08 Statements

Installer Qualifications; GA.

Qualifications of the sprinkler installer.

Submittal Preparer's Qualifications; GA.

The name and documentation of certification of the individual who will prepare the submittals, prior to the submittal of the drawings and hydraulic calculations.

SD-13 Certificates

Contractor's Material Test Certificates; GA.

Certificates, as specified in NFPA 13, shall be completed and signed by the Contractor's Representative performing required tests for both underground and aboveground piping.

SD-19 Operation and Maintenance Manuals

Sprinkler System; GA.

Manuals shall be in loose-leaf binder format and grouped by technical sections consisting of manufacturer's standard brochures, schematics, printed instructions, general operating procedures, and safety precautions. The manuals shall list routine maintenance procedures possible breakdowns, and repairs, and troubleshooting guide. This shall include procedures and instructions pertaining to frequency of preventive maintenance, inspection, adjustment, lubrication and cleaning necessary to minimize corrective maintenance and repair.

1.4 HYDRAULIC CALCULATIONS

Hydraulic calculations shall be as outlined in NFPA 13 except that calculations shall be performed by computer using software specifically designed for fire protection system design. Software which uses k-factors for typical branch lines is not acceptable. Calculations shall be taken back to the water supply source unless water supply data is otherwise indicated. Calculations shall substantiate that the design area indicated is the hydraulically most demanding. Water supply curves and system requirements shall be plotted on semi-logarithmic graph paper so as to present a summary of the complete hydraulic calculation. A summary sheet listing sprinklers in the design area and their respective hydraulic reference points, elevations, actual discharge pressures and actual flows shall be provided. Elevations of hydraulic reference points (nodes) shall be indicated. Documentation shall identify each pipe individually and the nodes connected thereto. The diameter, length, flow, velocity, friction loss, number and type fittings, total friction loss in the pipe, equivalent pipe length and Hazen-Williams coefficient shall be indicated for each pipe. For gridded systems, calculations shall show peaking of demand area friction loss to verify that the hydraulically most demanding area is being used. Also for gridded systems, a flow diagram indicating the quantity and direction of flows shall be included. A drawing showing hydraulic reference points (nodes) and pipe designations used in the calculations shall be included and shall be independent of shop drawings.

1.5 SUBMITTAL PREPARER'S QUALIFICATIONS

The sprinkler system submittals, including as-built drawings, shall be prepared by an individual who is either a registered professional engineer or who is certified as a Level III Technician by National Institute for Certification in Engineering Technologies (NICET) in the Automatic Sprinkler System Layout subfield of Fire Protection Engineering Technology in accordance with NICET 1014.

1.6 INSTALLER QUALIFICATIONS

The installer shall be experienced and regularly engaged in the installation of the type and complexity of system included in this project. A statement prior to submittal of any other data or drawings, that the proposed sprinkler system installer is regularly engaged in the installation of the type and complexity of system included in this project

shall be provided. In addition, data identifying the location of at least three systems recently installed by the proposed installer which are comparable to the system specified shall be submitted. Contractor shall certify that each system has performed satisfactorily, in the manner intended, for a period of not less than 6 months.

1.7 REGULATORY REQUIREMENTS

Compliance with referenced NFPA standards is mandatory. This includes advisory provisions listed in the appendices of such standards, as though the word "shall" had been substituted for the word "should" wherever it appears. Applicable material and installation standards referenced in Appendix A of NFPA 13 and NFPA 24 shall be considered mandatory the same as if such referenced standards were specifically listed in this specification. In the event of a conflict between specific provisions of this specification and applicable NFPA standards, this specification shall govern. All requirements that exceed the minimum requirements of NFPA 13 shall be incorporated into the design. Reference to "authority having jurisdiction" shall be interpreted to mean the Contracting Officer.

1.8 DELIVERY AND STORAGE

Equipment placed in storage shall be stored with protection from the weather, humidity and temperature variations, dirt and dust or other contaminants.

PART 2 PRODUCTS

2.1 GENERAL EQUIPMENT REQUIREMENTS

2.1.1 Standard Products

Materials and equipment shall be standard products of a manufacturer regularly engaged in the manufacture of such products and shall essentially duplicate items that have been in satisfactory use for at least 2 years prior to bid opening.

2.1.2 Requirements for Fire Protection Service

Equipment and materials shall have been tested by Underwriters Laboratories, Inc. and listed in UL-04 or approved by Factory Mutual and listed in FM P7825. Where the terms "listed" or "approved" appear in this specification, such shall mean listed in UL-04 or FM P7825.

2.1.3 Nameplates

Major components of equipment shall have the manufacturer's name, address, type or style, model or serial number, and catalog number on a plate permanently affixed to the item of equipment.

2.2 UNDERGROUND PIPING SYSTEMS

2.2.1 Pipe

Piping from a point 6 inches above the floor to a point 5 feet outside the building wall shall be ductile iron with a rated working pressure of 150 psi conforming to AWWA C151, with cement mortar lining conforming to AWWA C104. Piping more than 5 feet outside the building walls shall comply with Section 02660 WATER LINES.

2.2.2 Fittings and Gaskets

Fittings shall be ductile iron conforming to AWWA C110. Gaskets shall be suitable in design and size for the pipe with which such gaskets are to be used. Gaskets for ductile iron pipe joints shall conform to AWWA C111.

2.3 ABOVEGROUND PIPING SYSTEMS

Aboveground piping shall be steel.

2.3.1 Steel Piping System

2.3.1.1 Steel Pipe

Except as modified herein, steel pipe shall be black as permitted by NFPA 13 and shall conform to applicable provisions of ASTM A 795, ASTM A 53, or ASTM A 135. Pipe in which threads or grooves are cut shall be Schedule 40 or shall be listed by Underwriters' Laboratories to have a corrosion resistance ratio (CRR) of 1.0 or greater after threads or grooves are cut. Pipe shall be marked with the name of the manufacturer, kind of pipe, and ASTM designation.

2.3.1.2 Fittings for Non-Grooved Steel Pipe

Fittings shall be cast iron conforming to ASME B16.4, steel conforming to ASME B16.9 or ASME B16.11, or malleable iron conforming to ASME B16.3. Fittings into which sprinklers, drop nipples or riser nipples (sprigs) are screwed shall be threaded type. Plain-end fittings with mechanical couplings, fittings which use steel gripping devices to bite into the pipe and segmented welded fittings shall not be used.

2.3.1.3 Grooved Mechanical Joints and Fittings

Joints and fittings shall be designed for not less than 175 psi service and shall be the product of the same manufacturer. Fitting and coupling houses shall be malleable iron conforming to ASTM A 47, Grade 32510; ductile iron conforming to ASTM A 536, Grade 65-45-12. Gasket shall be the flush type that fills the entire cavity between the fitting and the pipe. Nuts and bolts shall be heat-treated steel conforming to ASTM A 183 and shall be cadmium plated or zinc electroplated.

2.3.1.4 Flanges

Flanges shall conform to NFPA 13 and ASME B16.1. Gaskets shall be non-asbestos compressed material in accordance with ASME B16.21, 1/16 inch thick, and full face or self-centering flat ring type. Bolts shall be squarehead conforming to ASME B18.2.1 and nuts shall be hexagon type conforming to ASME B18.2.2.

2.3.2 Pipe Hangers

Hangers shall be listed in UL-04 or FM P7825 and of the type suitable for the application, construction, and pipe type and sized involved.

2.3.3 Valves

2.3.3.1 Control Valve and Gate Valve

Manually operated sprinkler control valve and gate valve shall be outside stem and yoke (OSY) type and shall be listed in UL-01 or FM P7825.

2.4 ALARM INITIATING AND SUPERVISORY DEVICES

2.4.1 Sprinkler Waterflow Indicator Switch, Vane Type

Switch shall be vane type with a pipe saddle and cast aluminum housing. The electro-mechanical device shall include a flexible, low-density polyethylene paddle conforming to the inside diameter of the fire protection pipe. The device shall sense water movements and be capable of detecting a sustained flow of 10 gpm or greater. The device shall contain a retard device adjustable from 0 to 90 seconds to reduce the possibility of false alarms caused by transient flow surges. The switch shall include

two SPDT (Form C) contacts, and shall be equipped with a silicone rubber gasket to assure positive water seal and a dustproof cover and gasket to seal the mechanism from dirt and moisture.

2.5 FIRE DEPARTMENT CONNECTION

Fire department connection shall be projecting type with cast brass body, matching wall escutcheon lettered "Auto Spkr" with a chromium plated finish. The connection shall have two inlets with individual self-closing clappers, caps with drip drains and chains. Female inlets shall have 2-1/2 inch diameter American National Fire Hose Connection Screw Threads (NH) per NFPA 1963.

2.6 SPRINKLERS

Sprinklers shall be used in accordance with their listed spacing limitations. Temperature classification shall be intermediate. Sprinklers in high heat areas including attic spaces or in close proximity to unit heaters shall have temperature classification in accordance with NFPA 13.

2.6.1 Upright Sprinkler

Upright sprinkler shall be brass and shall have a nominal 1/2 inch or 17/32 inch orifice.

2.6.2 Sidewall Sprinkler

Sidewall sprinkler shall have a nominal 1/2 inch orifice. Sidewall sprinkler shall have a brass finish. Sidewall sprinkler shall be the quick-response type.

2.7 DISINFECTING MATERIALS

2.7.1 Liquid Chlorine

Liquid chlorine shall conform to AWWA B301.

2.7.2 Hypochlorites

Calcium hypochlorite and sodium hypochlorite shall conform to AWWA B300.

2.8 ACCESSORIES

2.8.1 Sprinkler Cabinet

Spare sprinklers shall be provided in accordance with NFPA 13 and shall be packed in a suitable metal or plastic cabinet. Spare sprinklers shall be representative of, and in proportion to, the number of each type and temperature rating of the sprinklers installed. At least one wrench of each type required shall be provided.

2.8.2 Identification Sign

Valve identification sign shall be minimum 6 inches wide x 2 inches high with enamel baked finish on minimum 18 gauge steel or 0.024 inch aluminum with red letters on a white background or white letters on red background. Wording of sign shall include, but not be limited to "main drain," "auxiliary drain," "inspector's test," "alarm test," "alarm line," and similar wording as required to identify operational components.

2.9 DOUBLE-CHECK VALVE BACKFLOW PREVENTION ASSEMBLY

Double-check backflow prevention assembly shall comply with ASSE 1015. The assembly shall have a bronze, cast-iron or stainless steel body with flanged ends. The assembly shall include OSY shutoff valves on the inlet and outlet, 2-positive-seating check valve for continuous pressure

application, and four test cocks. Assemblies shall be rated for working pressure of 150 psi. The maximum pressure loss shall be 6 psi at a flow rate equal to the sprinkler water demand, at the location of the assembly.

PART 3 EXECUTION

3.1 INSTALLATION REQUIREMENTS

The installation shall be in accordance with the applicable provisions of NFPA 13, NFPA 24 and publications referenced therein.

3.2 ABOVEGROUND PIPING INSTALLATION

Piping shall be run straight and bear evenly on hangers and supports.

3.2.1 Protection of Piping Against Earthquake Damage

The system piping shall be protected against damage from earthquakes. Seismic protection of the piping system shall be provided in accordance with NFPA 13 and Appendix A, with the exception that the "Earthquake Zones" map of Appendix A shall not apply to this project. Seismic protection shall include flexible couplings, sway bracing, seismic separation assemblies where piping crosses building seismic separation joints, and other features as required in NFPA 13 for protection of piping against damage from earthquakes. Branch lines shall be equipped with sway braces at the end sprinkler head and at intervals not exceeding 30 ft.

3.2.2 Piping in Exposed Areas

Exposed piping shall be installed so as not to diminish exit access widths, corridors or equipment access. Exposed horizontal piping, including drain piping, shall be installed to provide maximum headroom.

3.2.3 Upright Sprinklers

Riser nipples or "sprigs" to upright sprinklers shall contain no fittings between the branch line tee and the reducing coupling at the sprinkler. Riser nipples exceeding 30 inches in length shall be individually supported.

3.2.4 Pipe Joints

Pipe joints shall conform to NFPA 13, except as modified herein. Not more than four threads shall show after joint is made up. Welded joints will be permitted, only if welding operations are performed as required by NFPA 13 at the Contractor's fabrication shop, not at the project construction site. Flanged joints shall be provided where indicated or required by NFPA 13. Grooved pipe and fittings shall be prepared in accordance with the manufacturer's latest published specification according to pipe material, wall thickness and size. Grooved couplings and fittings shall be from the same manufacturer.

3.2.5 Reducers

Reductions in pipe sizes shall be made with one-piece tapered reducing fittings. The use of grooved-end or rubber-gasketed reducing couplings will not be permitted. When standard fittings of the required size are not manufactured, single bushings of the face type will be permitted. Where used, face bushings shall be installed with the outer face flush with the face of the fitting opening being reduced. Bushings shall not be used in elbow fittings, in more than one outlet of a tee, in more than two outlets of a cross, or where the reduction in size is less than 1/2 inch.

3.2.6 Pipe Penetrations

Cutting structural members for passage of pipes or for pipe-hanger fastenings will not be permitted. Pipes that must penetrate concrete or masonry walls or concrete floors shall be core-drilled and provided with pipe sleeves. Each sleeve shall be Schedule 40 galvanized steel, ductile iron or cast iron pipe and shall extend through its respective wall or floor and be cut flush with each wall surface. Sleeves shall provide required clearance between the pipe and the sleeve per NFPA 13. The space between the sleeve and the pipe shall be firmly packed with mineral wool insulation. In penetrations which are not fire-rated or not a floor penetration, the space between the sleeve and the pipe shall be sealed at both ends with plastic waterproof cement which will dry to a firm but pliable mass or with a mechanically adjustable segmented elastomer seal.

3.2.7 Escutcheons

Escutcheons shall be provided for pipe penetration of ceilings and walls. Escutcheons shall be securely fastened to the pipe at surfaces through which piping passes.

3.2.8 Inspector's Test Connection

Unless otherwise indicated, test connection shall consist of 1 inch pipe connected to the remote branch line; a test valve located approximately 7 feet above the floor; a smooth bore brass outlet equivalent to the smallest orifice sprinkler used in the system; and a painted metal identification sign affixed to the valve with the words "Inspector's Test." The discharge orifice shall be located outside the building wall directed so as not to cause damage to adjacent construction or landscaping during full flow discharge.

3.2.9 Drains

Main drain piping shall be provided to discharge to the floor pointing towards the floor drain. Auxiliary drains shall be provided as required by NFPA 13 except that drain valves shall be used where drain plugs are otherwise permitted. Where branch lines terminate at low points and form trapped sections, such branch lines shall be manifolded to a common drain line.

3.2.10 Installation of Fire Department Connection

Connection shall be mounted on the exterior wall approximately 3 feet above finished grade. The piping between the connection and the check valve shall be provided with an automatic drip in accordance with NFPA 13 and arranged to drain to the outside.

3.2.11 Identification Signs

Signs shall be affixed to each control valve, inspector test valve, main drain, auxiliary drain, test valve, and similar valves as appropriate or as required by NFPA 13. Hydraulic design data nameplates shall be permanently affixed to each sprinkler riser as specified in NFPA 13.

3.3 UNDERGROUND PIPING INSTALLATION

The fire protection water main shall be laid, and joints anchored, in accordance with NFPA 24. Minimum depth of cover shall be 3 feet. The supply line shall terminate inside the building with a flanged piece, the bottom of which shall be set not less than 6 inches above the finished floor. A blind flange shall be installed temporarily on top of the flanged piece to prevent the entrance of foreign matter into the supply line. A concrete thrust block shall be provided at the elbow where the pipe turns up toward the floor. In addition, joints shall be anchored in accordance with NFPA 24 using pipe clamps and steel rods from the elbow to the flange

above the floor and from the elbow to a pipe clamp in the horizontal run of pipe. Buried steel components shall be provided with a corrosion protective coating in accordance with AWWA C203. Piping more than 5 feet outside the building walls shall meet the requirements of Section 02660 WATER LINES.

3.4 EARTHWORK

Earthwork shall be performed in accordance with applicable provisions of Section 02221 EXCAVATION, FILLING AND BACKFILLING FOR BUILDINGS.

3.5 ELECTRICAL WORK

Alarm signal wiring connected to the electric gong shall be in accordance with Section 16415 ELECTRICAL WORK, INTERIOR. Wiring color code shall remain uniform throughout the system.

3.6 STERILIZATION

After system components have been installed and pressure tested, each portion of the completed system shall be sterilized. After pressure tests have been made, the portion to be sterilized shall be thoroughly flushed with water until all entrained dirt and other foreign materials have been removed before introducing chlorinating material. The chlorinating material shall be hypochlorites or liquid chlorine. Water chlorination procedure shall be in accordance with AWWA M20. The chlorinating material shall be fed into the sprinkler piping at a constant rate of 50 parts per million (ppm). A properly adjusted hypochlorite solution injected into the system with a hypochlorinator, or liquid chlorine injected into the system through a solution-fed chlorinator and booster pump, shall be used. Chlorination application shall continue until the entire system is filled. The water shall remain in the system for a minimum of 24 hours. Each valve in the system shall be opened and closed several times to ensure its proper disinfection. Following the 24-hour period, no less than 25 ppm chlorine residual shall remain in the system. The system shall be then flushed with clean water until the residual chlorine is reduced to less than one part per million. Samples of water in properly sterilized containers for bacterial examination will be taken from several system locations which are approved by the Contracting Officer. Samples shall be tested for total coliform organisms (coliform bacteria, fecal coliform, streptococcal, and other bacteria) in accordance with AWWA-10062JU. The testing method shall be either the multiple-tube fermentation technique or the membrane-filter technique. The sterilization shall be repeated until tests indicate the absence of coliform organisms (zero mean coliform density per 100 milliliters) in the samples for at least 2 full days. The system will not be accepted until satisfactory bacteriological results have been obtained.

3.7 FIELD PAINTING AND FINISHING

Field painting and finishing are specified in Section 09900 PAINTING, GENERAL.

3.8 PRELIMINARY TESTS

The system, including the underground water mains, and the aboveground piping and system components, shall be tested to assure that equipment and components function as intended. The underground and aboveground interior piping systems and attached appurtenances subjected to system working pressure shall be tested in accordance with NFPA 13 and NFPA 24. Upon completion of specified tests, the Contractor shall complete certificates as specified in paragraph SUBMITTALS.

3.8.1 Underground Piping

3.8.1.1 Flushing

Underground piping shall be flushed in accordance with NFPA 24. This includes the requirement to flush the lead-in connection to the fire protection system at a flow rate not less that the calculated maximum water demand rate of the system.

3.8.1.2 Hydrostatic Testing

New underground piping shall be hydrostatically tested in accordance with NFPA 24. The allowable leakage shall be measured at the specified test pressure by pumping from a calibrated container. The amount of leakage at the joints shall not exceed 2 quarts per hour per 100 gaskets or joints, regardless of pipe diameter.

3.8.2 Aboveground Piping

3.8.2.1 Hydrostatic Testing

Aboveground piping shall be hydrostatically tested in accordance with NFPA 13 at not less than 200 psi or 50 psi in excess of maximum system operating pressure and shall maintain that pressure without loss for 2 hours. There shall be no drop in gauge pressure or visible leakage when the system is subjected to the hydrostatic test. The test pressure shall be read from a gauge located at the low elevation point of the system or portion being tested.

3.8.3 Testing of Alarm Devices

Each alarm switch shall be tested by flowing water through the inspector's test connection. Each water-operated alarm devices shall be tested to verify proper operation.

3.8.4 Main Drain Flow Test

Following flushing of the underground piping, a main drain test shall be made to verify the adequacy of the water supply. Static and residual pressures shall be recorded on the certificate specified in paragraph SUBMITTALS. In addition, a main drain test shall be conducted each time after a main control valve is shut and opened.

3.9 FINAL ACCEPTANCE TEST

A technician employed by the installing Contractor shall be present for the final tests and shall provide a complete demonstration of the operation of the system. This shall include operation of control valves and flowing of inspector's test connections to verify operation of associated waterflow alarm switches. After operation of control valves has been completed, the main drain test shall be repeated to assure that control valves are in the open position. In addition, the representative shall have available copies of as-built drawings and certificates of tests previously conducted. The installation shall not be considered accepted until identified discrepancies have been corrected and test documentation is properly completed and received.

-- End of Section --

SECTION 15400

PLUMBING, GENERAL PURPOSE

PART 1 GENERAL

1.1 REFERENCES

The publications listed below form a part of this specification to the extent referenced. The publications are referred to in the text by basic designation only.

AIR CONDITIONING AND REFRIGERATION INSTITUTE (ARI)

ARI 700	(1995) Specifications for Fluorocarbon and Other Refrigerants
ARI 1010	(1994) Self-Contained, Mechanically-Refrigerated Drinking-Water Coolers

AMERICAN NATIONAL STANDARDS INSTITUTE (ANSI)

ANSI Z21.10.1	(1993; Z21.10.la; Z21.10.lb; Z21.10.1c) Gas Water Heaters Vol. I Storage Water Heaters with Input Ratings of 75,000 Btu Per Hour or Less
ANSI Z21.10.3	(1993; Z21.10.3a; Z21.10.3b) Gas Water Heaters Vol. III Storage, With Input Ratings Above 75,000 Btu Per Hour, Circulating and Instantaneous Water Heaters
ANSI Z21.22	(1986; Z21.22a) Relief Valves and Automatic Gas Shutoff Devices for Hot Water Supply Systems
ANSI Z21.56	(1994; Z21.56a) Gas-Fired Pool Heaters

AMERICAN SOCIETY FOR TESTING AND MATERIALS (ASTM)

ASTM A 53	(1996) Pipe, Steel, Black and Hot-Dipped, Zinc-Coated Welded and Seamless
ASTM A 74	(1996) Cast Iron Soil Pipe and Fittings
ASTM A 105	(1996) Forgings, Carbon Steel,:for Piping Components
ASTM A 193	(1996) Alloy-Steel and Stainless Steel Bolting Materials for High-Temperature Service

This section revised
by AMDT 0001

ASTM A 515	(1992) Pressure Vessel Plates, Carbon Steel, for Intermediate- and Higher-Temperature Service
ASTM A 516	(1990) Pressure Vessel Plates, Carbon Steel, for Moderate- and Lower-Temperature Service
ASTM A 733	(1993) Welded and Seamless Carbon Steel and Austenitic Stainless Steel Pipe Nipples
ASTM A 888	(1994) Hubless Cast Iron Soil Pipe and Fittings for Sanitary and Storm Drain, Waste, and Vent Piping Applications
ASTM B 32	(1995b) Solder Metal
ASTM B 42	(1993) Seamless Copper Pipe, Standard Sizes
ASTM B 43	(1994) Seamless Red Brass- Pipe, Standard Sizes
ASTM B 88	(1996) Seamless Copper Water Tube
ASTM B 306	(1996) Copper Drainage Tube (DWV)
ASTM B 370	(1992) Copper Sheet and Strip for Building Construction
ASTM B 641	(1993) Seamless and Welded Copper Distribution Tube (Type D)
ASTM B 813	(1993) Liquid and Paste Fluxes for Soldering Applications of Copper and Copper Alloy Tube
ASTM B 828	(1992) Making Capillary Joints by Soldering of Copper and Copper-Alloy Tube and Fittings
ASTM C 564	(1995) Rubber Gaskets for Cast Iron Soil Pipe and Fittings
ASTM C 920	(1994) Elastomeric Joint Sealants
ASTM D 2822	(1991) Asphalt Roof Cement
ASTM D 3139	(1989; R 1995) Joints for Plastic Pressure Pipes Using Flexible Elastomeric Seals
ASTM D 3212	(1992) Joints for Drain and Sewer Plastic Pipes Using Flexible Elastomeric Seals
ASTM D 3308	(199la) PTFE Resin Skived Tape
ASTM F 477	(1995) Elastomeric Seals (Gaskets) for Joining Plastic Pipe

This section revised
by AMDT 0001

AMERICAN SOCIETY OF HEATING, REFRIGERATING AND AIR-CONDITIONING ENGINEERS (ASHRAE)

ASHRAE 34	(1992; Addenda a-j) Number Designation and Safety Classification of Refrigerants
ASHRAE 90.1	(1989; 90.lb; 90.1c; 90.ld; 90.le; 90.lg; 90.li) Energy Efficient Design of New Buildings Except Low-Rise Residential Buildings

AMERICAN SOCIETY OF MECHANICAL ENGINEERS (ASME)

ASME A112.1.2	(1991) Air Gaps in Plumbing Systems
ASME A112.6.1M	(1988) Supports for Off-the-Floor Plumbing Fixtures for Public Use
ASME A112.18.1M	(1996) Plumbing Fixture Fittings
ASME A112.19.1M	(1994) Enameled Cast Iron Plumbing Fixtures
ASME A112.19.2M	(1995; Errata) Vitreous China Plumbing Fixtures
ASME A112.19.3M	(1987; R 1996) Stainless Steel Plumbing fixtures (Designed for Residential Use)
ASME A112.21.1M	(1991) Floor Drains
ASME A112.36.2M	(1991) Cleanouts
ASME B1.20.1	(1983; R 1992) Pipe Threads, General Purpose (Inch)
ASME B16.3	(1992) Malleable Iron Threaded Fittings
ASME B16.4	(1992) Gray Iron Threaded Fittings
ASME B16.5	(1988; Errata Oct 88; B16.5a) Pipe Flanges and Flanged Fittings
ASME B16.12	(1991) Cast Iron Threaded Drainage Fittings
ASME B16.15	(1985; R 1994) Cast Bronze Threaded Fittings Classes 125 and 250
ASME B16.18	(1984; R 1994) Cast Copper Alloy Solder Joint Pressure Fittings
ASME B16.21	(1992) Nonmetallic Flat Gaskets for Pipe Flanges
ASME B16.22	(1995) Wrought Copper and Copper Alloy Solder Joint Pressure Fittings

This section revised
by AMDT 0001

ASME B16.23	(1992; Errata Jan 1994) Cast Copper Alloy Solder Joint Drainage Fittings - DWV
ASME B16.24	(1991; Errata) Cast Copper Alloy Pipe Flanges, Class 150, 300, 400, 600, 900, 1500 and 2500, and Flanged Fittings, Class 150 and 300
ASME B16.29	(1994) Wrought Copper and Wrought Copper Alloy Solder Joint Drainage Fittings - DWV
ASME B31.5	(1992; B31.5a) Refrigeration Piping
ASME B40.1	(1991) Gauges - Pressure Indicating Dial Type - Elastic Element
ASME BPV VIII Div 1	(1995; Addenda Dec 1995) Boiler and Pressure Vessel Code; Section VIII, Pressure Vessels Division 1 - Basic Coverage
ASME CSD-1	(1995) Controls and Safety Devices for Automatically Fired Boilers

AMERICAN SOCIETY OF SANITARY ENGINEERING (ASSE)

ASSE 1001	(1990) Pipe Applied Atmospheric Type Vacuum Breakers
ASSE 1002	(1964; Rev thru Apr 1986) Water Closet Flush Tank Ball Cocks
ASSE 1005	(1993) Water Heater Drain Valves - 3/4-Inch Iron Pipe Size
ASSE 1011	(1995) Hose Connection Vacuum Breakers
ASSE 1012	(1995) Backflow Preventers with Intermediate Atmospheric Vent
ASSE 1013	(1971; Rev thru Oct 1993) Reduced Pressure Principle Backflow Preventers

AMERICAN WATER WORKS ASSOCIATION (AWWA)

AWWA-01	(1995) Standard Methods for the Examination of Water and Wastewater
AWWA B300	(1992) Hypochlorites
AWWA B301	(1992) Liquid Chlorine
AWWA C105	(1993) Polyethylene Encasement for Ductile-Iron Pipe Systems

This section revised
by AMDT 0001

AWWA C203	(1991) Coal-Tar Protective Coatings and Linings for Steel Water Pipelines - Enamel and Tape - Hot-Applied
AWWA C606	(1987) Grooved and Shouldered Joints
AWWA C700	(1995) Cold-Water Meters - Displacement Type, Bronze Main Case
AWWA D100	(1984; DlOOa) Welded Steel Tanks for Water Storage
AWWA M20	(1973) Manual: Water Chlorination Principles and Practices

AMERICAN WELDING SOCIETY (AWS)

AWS A5.8	(1992) Filler Metals for Brazing and Braze Welding
AWS B2.2	(1991) Brazing Procedure and Performance Qualification

CAST IRON SOIL PIPE INSTITUTE (CISPI)

CISPI 301	(1995) Hubless Cast Iron Soil Pipe and -- Fittings for Sanitary and Storm Drain, Waste, and Vent Piping Applications
CISPI HSN-85	(1985) Neoprene Rubber Gaskets for Hub and Spigot Cast Iron Soil Pipe and Fittings

CODE OF FEDERAL REGULATIONS (CFR)

10 CFR 430	Energy Conservation Program for Consumer Products

COMMERCIAL ITEM DESCRIPTIONS (CID)

CID A-A-238	(Rev B) Seat, Water Closet
CID A-A-240	(Basic) Shower Head, Ball Joint

COPPER DEVELOPMENT ASSOCIATION (CDA)

CDA-02 (1995) Copper Tube Handbook

COUNCIL OF AMERICAN BUILDING OFFICIALS (CABO)

CABO A117.1	(1992; Errata Jun 1993) Accessible and Usable Buildings and Facilities

This section revised
by AMDT 0001

FOUNDATION FOR CROSS-CONNECTION CONTROL AND HYDRAULIC RESEARCH (FCCHR)

FCCCHR-01	(1993) Manual of Cross-Connection Control

HYDRAULIC INSTITUTE (HI)

HI 1.1-1.5	(1994) Centrifugal Pumps

MANUFACTURERS STANDARDIZATION SOCIETY OF THE VALVE AND FITTINGS INDUSTRY (MSS)

MSS SP-25	(1993) Standard Marking System for Valves, Fittings, Flanges and Unions
MSS SP-58	(1993) Pipe Hangers and Supports - Materials, Design and Manufacture
MSS SP-67	(1995) Butterfly Valves
MSS SP-69	(1996) Pipe Hangers and Supports - Selection and Application
MSS SP-73	(1991) Brazing Joints for Copper and Copper Alloy Pressure Fittings
MSS SP-78	(1987; R 1992) Cast Iron Plug Valves, Flanged and Threaded Ends
MSS SP-80	(1997) Bronze Gate, Globe, Angle and Check Valves
MSS SP-83	(1995) Class 3000 Steel Pipe Unions Socket-Welding and Threaded
MSS SP-110	(1996) Ball Valves Threaded, Socket-Welding, Solder Joint, Grooved and Flared Ends

NATIONAL ASSOCIATION OF PLUMBING-HEATING-COOLING CONTRACTORS (NAPHCC)

NAPHCC-01	(1996) National Standard Plumbing Code

NATIONAL ELECTRICAL MANUFACTURERS ASSOCIATION (NEMA)

NEMA 250	(1991) Enclosures for Electrical Equipment (1000 Volts Maximum)

NATIONAL FIRE PROTECTION ASSOCIATION (NFPA)

NFPA 54	(1992) National Fuel Gas Code
NFPA 90A	(1993) Installation of Air Conditioning and Ventilating Systems

This section revised
by AMDT 0001

PLUMBING AND DRAINAGE INSTITUTE (PDI)

PDI WH 201 (1992) Water Hammer Arresters

SOCIETY OF AUTOMOTIVE ENGINEERS (SAE)

SAE J1508 (1993) Hose Clamps

1.2 STANDARD PRODUCTS

Specified materials and equipment shall be standard products of a manufacturer regularly engaged in the manufacture of such products. Specified equipment shall essentially duplicate equipment that has performed satisfactorily at least two years prior to bid opening.

1.3 PERFORMANCE REQUIREMENTS

1.3.1 Cathodic Protection and Pipe Joint Bonding

Cathodic protection and pipe joint bonding systems shall be in accordance with Section 16640 CATHODIC PROTECTION SYSTEM (SACRIFICIAL ANODE).

1.4 ELECTRICAL WORK

Motors, motor controllers and motor efficiencies shall conform to the requirements of Section 16415 ELECTRICAL WORK, INTERIOR. Electrical motor-driven equipment specified herein shall be provided complete with motors. Equipment shall be rated at 60 Hz, single phase, ac unless otherwise indicated. Where a motor controller is not provided in a motor-control center on the electrical drawings, a motor controller shall be as indicated. Motor controllers shall be provided complete with properly sized thermal-overload protection in each ungrounded conductor, auxiliary contact, and other equipment, at the specified capacity, and including an allowable service factor.

1.5 SUBMITTALS

Government approval is required for submittals with a "GA" designation; submittals having an "FIO" designation are for information only. The following shall be submitted in accordance with Section 01330 SUBMITTAL PROCEDURES:

SD-01 Data

Vibration-Absorbing Features; FIO.

Details of vibration-absorbing features, including arrangement, foundation plan, dimensions and specifications.

SD-04 Drawings

Plumbing System; FIO.

Detail drawings consisting of illustrations, schedules, performance charts, instructions, brochures, diagrams, and other information to illustrate the requirements and operations of each system. Detail drawings for the

This section revised
by AMDT 0001

complete plumbing system including piping layouts and locations of connections; dimensions for roughing-in, foundation, and support points; schematic diagrams and wiring diagrams or connection and interconnection diagrams. Detail drawings shall indicate clearances required for maintenance and operation. Where piping and equipment are to be supported other than as indicated, details shall include loadings and proposed support methods. Mechanical drawing plans, elevations, views, and details, shall be drawn to scale.

Electrical Schematics; FIO.

Complete electrical schematic lineless or full line interconnection and connection diagram for each piece of mechanical equipment having more than one automatic or manual electrical control device.

SD-06 Instructions

Plumbing System; FIO.

Diagrams, instructions, and other sheets proposed for posting. Manufacturer's recommendations for the installation of bell and spigot and hubless joints for cast iron soil pipe.

SD-09 Reports

Tests, Flushing and Sterilization; FIO.

Test reports in booklet form showing all field tests performed to adjust each component and all field tests performed to prove compliance with the specified performance criteria, completion and testing of the installed system. Each test report shall indicate the final position of controls.

Backflow Prevention Assembly Tests; FIO.

Certification of proper operation shall be as accomplished in accordance with state regulations by an individual certified by the state to perform such tests. If no state requirement exists, the Contractor shall have the manufacturer's representative test the device, to ensure the unit is properly installed and performing as intended. The Contractor shall provide written documentation of the tests performed and signed by the individual performing the tests.

SD-13 Certificates

Materials and Equipment; FIO.

Where materials or equipment are specified to comply with requirements of AGA, or ASME, proof of such compliance. The label or listing of the specified agency will be acceptable evidence. In lieu of the label or listing, a written certificate may be submitted from an approved, nationally recognized testing organization equipped to perform such services, stating that the items have been tested and conform to the requirements and testing methods of the specified agency. Where equipment is specified to conform to requirements of the ASME Boiler and Pressure Vessel Code, the design, fabrication, and installation shall conform to the code.

This section revised
by AMDT 0001

SD-19 Operation and Maintenance Manuals

Plumbing System; FIO.

Six copies of the operation manual outlining the step-by-step procedures required for system startup, operation and shutdown. The manual shall include the manufacturer's name, model number, service manual, parts list, and brief description of all equipment and their basic operating features. Six copies of the maintenance manual listing routine maintenance procedures, possible breakdowns and repairs. The manual shall include piping and equipment layout and simplified wiring and control diagrams of the system as installed.

1.6 REGULATORY REQUIREMENTS

1.6.1 Plumbing

Plumbing work shall be in accordance with NAPHCC-01.

1.7 PROJECT/SITE CONDITIONS

The Contractor shall become familiar with details of the work, verify dimensions in the field, and advise the Contracting Officer of any discrepancy before performing any work.

PART 2 PRODUCTS

2.1 MATERIALS

Materials for various services shall be in accordance with TABLES I and II. Pipe schedules shall be selected based on service requirements. Pipe fittings shall be compatible with the applicable pipe materials. Pipe threads (except dry seal) shall conform to ASME B1.20.1. Material or equipment containing lead shall not be used in any potable water system. Hubless cast-iron soil pipe shall not be installed under concrete floor slabs.

2.1.1 Pipe Joint Materials

Joints and gasket materials shall conform to the following:

a. Coupling for Cast-Iron Pipe: ASTM A 74, AWWA C606.

b. Coupling for Steel Pipe: AWWA C606.

c. Flange Gaskets: Gaskets shall be made of non-asbestos material in accordance with ASME B16.21. Gaskets shall be flat, 1/16 inch thick, and contain Aramid fibers bonded with Styrene Butadiene Rubber (SBR) or Nitro Butadiene Rubber (NBR). Gaskets shall be the full face or self centering flat ring type. Gaskets used for hydrocarbon service shall be bonded with NBR.

e. Neoprene Gaskets for Hub and Cast-Iron Pipe and Fittings: CISPI HSN-85.

This section revised
by AMDT 0001

f. Brazing Material: Brazing material shall conform to AWS A5.8, BCuP-5.

g. Brazing Flux: Flux shall be in paste or liquid form appropriate for use with brazing material. Flux shall be as follows: lead-free; have a 100 percent flushable residue; contain slightly acidic reagents; contain potassium borides; and contain fluorides. Silver brazing materials shall be in accordance with AWS A5.8.

h. Solder Material: Solder metal shall conform to ASTM B 32 95-5 tin-antimony.

I. Solder Flux: Flux shall be liquid form, non-corrosive, and conform to ASTM B 813, Standard Test 1.

j. PTFE Tape: PTFE Tape, for use with Threaded Metal or Plastic Pipe, ASTM D 3308.

k. Rubber Gaskets for Cast-Iron Soil-Pipe and Fittings: ASTM C 564.

1. Flexible Elastomeric Seals: ASTM D 3139, ASTM D 3212 or ASTM F 477.

m. Flanged fittings including flanges, bolts, nuts, bolt patterns, etc. shall be in accordance with ASME B16.5 class 150 and shall have the manufacturer's trademark affixed in accordance with MSS SP-25. Flange material shall conform to ASTM A 105. Blind flange material shall conform to ASTM A 516 cold service and ASTM A 515 for hot service. Bolts shall be high strength or intermediate strength with material conforming to ASTM A 193.

2.1.2 Miscellaneous Materials

Miscellaneous materials shall conform to the following:

a. Water Hammer Arrester: PDI WH 201.

b. Copper, Sheet and Strip for Building Construction: ASTM B 370.

c. Asphalt Roof Cement: ASTM D 2822.

d. Hose Clamps: SAE J1508.

e. Supports for Off-The-Floor Plumbing Fixtures: ASME A112.6.1M.

f. Metallic Cleanouts: ASME A112.36.2M.

g. Plumbing Fixture Setting Compound: A preformed flexible ring seal molded from hydrocarbon wax material. The seal material shall be nonvolatile nonasphaltic and contain germicide and provide watertight, gastight, odorproof and verminproof properties.

h. Coal-Tar Protective Coatings and Linings for Steel Water Pipelines: AWWA C203.

I. Hypochlorites: AWWA B300.

This section revised
by AMDT 0001

j. Liquid Chlorine: AWWA B301.

k. Polyethylene Encasement for Ductile-Iron Piping: AWWA C105.

l. Gauges - Pressure and Vacuum Indicating Dial Type - Elastic Element: ASME B40.1.

2.1.3 Pipe Insulation Material

Insulation shall be as specified in Section 15250 THERMAL INSULATION FOR MECHANICAL SYSTEMS.

2.2 PIPE HANGERS, INSERTS, AND SUPPORTS

Pipe hangers, inserts, and supports shall conform to MSS SP-58 and MSS SP-69.

2.3 VALVES

Valves shall be provided on supplies to equipment and fixtures. Valves 2-1/2 inches and smaller shall be bronze with threaded bodies for pipe and solder-type connections for tubing. Valves 3 inches and larger shall have flanged iron bodies and bronze trim. Pressure ratings shall be based upon the application. Grooved end valves may be provided if the manufacturer certifies that the valves meet the performance requirements of applicable MSS standard. Valves shall conform to the following standards:

Description	Standard
Butterfly Valves	MSS SP-67
Ball Valves Threaded, Socket-Welding, Solder Joint, Grooved and Flared Ends	MSS SP-110
Cast-Iron Plug Valves, Flanged and Threaded Ends	MSS SP-78
Bronze Gate, Globe, Angle, and Check Valves	MSS SP-80
Vacuum Relief Valves	ASSE 1001
Water Heater Drain Valves	ASSE 1005
Temperature and Pressure Relief Valves for Hot Water Supply Systems	ANSI Z21.22
Temperature and Pressure Relief Valves for Automatically Fired Hot Water Boilers	ASME CSD-1 Safety Code No., Part CW, Article 5

2.3.1 Wall Hydrants

Wall hydrants with vacuum-breaker backflow preventer shall have a nickel-brass or nickel-bronze wall plate or flange with nozzle and

This section revised
by AMDT 0001

detachable key handle. A brass or bronze operating rod shall be provided within a galvanized iron casing of sufficient length to extend through the wall so that the valve is inside the building, and the portion of the hydrant between the outlet and valve is self-draining. A brass or bronze valve with coupling and union elbow having metal-to-metal seat shall be provided. Valve rod and seat washer shall be removable through the face of the hydrant. The hydrant shall have 3/4 inch exposed hose thread on spout and 3/4 inch male pipe thread on inlet.

2.3.2 Relief Valves

Water heaters and hot water storage tanks shall have a combination pressure and temperature (PT) relief valve. The pressure relief element of a PT relief valve shall have adequate capacity to prevent excessive pressure buildup in the system when the system is operating at the maximum rate of heat input. The temperature element of a PT relief valve shall have a relieving capacity which is at least equal to the total input of the heaters when operating at their maximum capacity. Relief valves shall be rated according to ANSI Z21.22. Relief valves for systems where the maximum rate of heat input is less than 200,000 Btuh shall have 3/4 inch minimum inlets, and 3/4 inch outlets. Relief valves for systems where the maximum rate of heat input is greater than 200,000 Btuh shall have 1 inch minimum inlets, and 1 inch outlets. The discharge pipe from the relief valve shall be the size of the valve outlet.

2.4 FIXTURES

Fixtures shall be water conservation type, in accordance with NAPHCC-01. Fixtures for use by the physically handicapped shall be in accordance with CABO A117.1. Vitreous china, nonabsorbent, hard-burned, and vitrified throughout the body shall be provided. No fixture will be accepted that shows cracks, crazes, blisters, thin spots, or other flaws. Fixtures shall be equipped with appurtenances such as traps, faucets, stop valves, and drain fittings. Each fixture and piece of equipment requiring connections to the drainage system, except grease interceptors, shall be equipped with a trap. Brass expansion or toggle bolts capped with acorn nuts shall be provided for supports, and polished chromium-plated pipe, valves, and fittings shall be provided where exposed to view. Fixtures with the supply discharge below the rim shall be equipped with backflow preventers. Internal parts of shower mixing valves, shower head face plates, and pop-up stoppers of lavatory waste drains may contain acetal resin, fluorocarbon, nylon, acrylonitrile-butadiene-styrene {ABS) or other plastic material, if the material has provided satisfactory service under actual commercial or industrial operating conditions for not less than 2 years. Plastic in contact with hot water shall be suitable for 180 degrees F water temperature. Plumbing fixtures shall be as indicated in paragraph PLUMBING FIXTURE SCHEDULE.

2.4.1 Lavatories

Enameled cast-iron lavatories shall be provided with two cast-iron or steel brackets secured to the underside of the apron and drilled for bolting to the wall in a manner similar to the hanger plate. Exposed brackets shall be porcelain enameled.

This section revised
by AMDT 0001

2.5 BACKFLOW PREVENTERS

Backflow preventers shall be approves and listed by the Foundation For Cross-Connection Control Hydraulic Research. Reduced pressure principle assemblies, double check valve assemblies, atmospheric (nonpressure) type vacuum breakers, and pressure type vacuum breakers shall be tested, approved, and listed in accordance with FCCCHR-01. Backflow preventers with intermediate atmospheric vent shall conform to ASSE 1012. Reduced pressure principle backflow preventers shall conform to ASSE 1013. Hose connection vacuum breakers shall conform to ASSE 1011. Pipe applied atmospheric type vacuum breakers shall conform to ASSE 1001. Air gaps in plumbing systems shall conform to ASME A112.1.2.

2.6 DRAINS

2.6.1 Floor and Shower Drains

Floor and shower drains shall consist of a galvanized body, integral seepage pan, and adjustable perforated or slotted chromium-plated bronze, nickel-bronze, or nickel-brass strainer, consisting of grate and threaded collar. Floor drains shall be cast iron. Drains shall be of double drainage pattern for embedding in the floor construction. The seepage pan shall have weep holes or channels for drainage to the drainpipe. The strainer shall be adjustable to floor thickness. A clamping device for attaching flashing or waterproofing membrane to the seepage pan without damaging the flashing or waterproofing membrane shall be provided when required. Drains shall be provided with threaded or caulked connection. In lieu of a caulked joint between the drain outlet and waste pipe, a neoprene rubber gasket conforming to ASTM C 564 may be installed, provided that the drain is specifically designed for the rubber gasket compression type joint. Floor and shower drains shall conform to ASME A112.21.LM.

2.6.2 Pit Drains

Pit drains shall consist of a body, integral seepage pan, and nontilting perforated or slotted grate. Drains shall be of double drainage pattern suitable for embedding in the floor construction. The seepage pan shall have weep holes or channels for drainage to the drain pipe. Membrane or flashing clamping device shall be provided when required. Drains shall be cast iron with manufacturer's standard coating. Draino shall be circular and provided with bottom outlet suitable for inside caulked connection, unless otherwise indicated.

2.7 TRAPS

Unless otherwise specified, traps shall be copper-alloy adjustable tube type with slip joint inlet and swivel. Traps shall be without a cleanout. Tubes shall be copper alloy with walls not less than 0.032 inch thick within commercial tolerances, except on the outside of bends where the thickness may be reduced slightly in manufacture by usual commercial methods. Inlets shall have rubber washer and copper alloy nuts for slip joints above the discharge 2 vel. Swivel joints shall be below the discharge level and shall be of metal-to-metal or metal-to-plastic type as required for the application. Nuts shall have flats for wrench grip. Outlets shall have internal pipe thread, except that when required for the application, the outlets shall have sockets for solder-joint connections.

This section revised
by AMDT 0001

The depth of the water seal shall be not less than 2 inches. The interior diameter shall be not more than 1/8 inch over or under the nominal size, and interior surfaces shall be reasonably smooth throughout. A copper alloy "P" trap assembly consisting of an adjustable "P" trap and threaded trap wall nipple with cast brass wall flange shall be provided for lavatories. The assembly shall be a standard manufactured unit and may have a rubber-gasketed swivel joint.

2.8 WATER HEATER

Water heater types and capacities shall be as indicated. Each gas-fired water heater shall have controls adjustable from 100 to 140 degrees F. The thermal efficiencies and stand by heat losses shall conform to TABLE III for each type of water heater specified. The only exception is that the storage capacity need not meet the standard loss requirement if the tank surface area is not insulated to R-12.5 and if a standing light is not used.

2.8.1 Automatic Storage Type

Heaters shall be complete with control system, and shall have ASME rated combination pressure and temperature relief valve.

2.8.2 Gas-Fired Type

Gas-fired water heaters shall conform to ANSI Z21.10.1 when input is 75,000 Btu per hour or less or ANSI Z21.10.3 for heaters with input greater than 75,000 Btu per hour. The tank shall be cement-lined or glass-lined steel type in accordance with AWWA D100. Storage tank capacity shall be as shown.

2.9 PUMPS

2.9.1 Circulating Pumps

Domestic hot water circulating pumps shall be electrically driven, single-stage, centrifugal, with mechanical seals, suitable for the intended service. Pump capacities, efficiencies, motor sizes, speeds, and impeller types shall be as shown. Pump and motor shall be supported by the piping on which it is installed. The shaft shall be one-piece, heat-treated, corrosion-resisting steel with impeller and smooth-surfaced housing of bronze. Motor shall be totally enclosed, fan-cooled and shall have sufficient horsepower for the service required. Pump shall conform to HI 1.1-1.5. Each pump motor shall be equipped with an across-the-line magnetic controller in a NEMA 250, Type 1 enclosure with "START-STOP" switch in cover. Pump motors smaller than Fractional horsepower pump motors shall have integral thermal overload protection in accordance with Section 16415 ELECTRICAL WORK, INTERIOR. Guards shall shield exposed moving parts.

2.10 COMPRESSED AIR SYSTEM

2.10.1 Air Compressors

Air compressor unit shall be a factory-packaged assembly, including 3 phase, 208 volt motor controls, switches, wiring, accessories, and motor

This section revised
by AMDT 0001

controllers, in a NEMA 250, Type 1 enclosure. Tank-mounted air compressors shall be manufactured to comply with UL listing requirements. Air compressors shall have manufacturer's name and address, together with trade name, and catalog number on a nameplate securely attached to the equipment. Each compressor shall start and stop automatically at upper and lower pressure limits of the system. Guards shall shield exposed moving parts. Each compressor motor shall be provided with an across-the-line-type magnetic controller, complete with low-voltage release. An intake air filter and silencer shall be provided with each compressor. Means shall be provided for draining condensed moisture from the receiver by a manual drain valve. Capacities of air compressors and receivers shall be as indicated.

2.10.2 Lubricated Compressors

Compressors shall be two-stage, V-belt drive, capable of operating continuously against their designed discharge pressure, and shall operate at a speed not in excess of 1800 rpm. Compressors shall have the capacity and discharge pressure indicated. Compressors shall be assembled complete on a common subbase. The compressor main bearings shall be either roller or ball. The discharge passage of the high pressure air shall be piped to the air receiver with a copper pipe or tubing. A pressure gauge calibrated to 150 psi and equipped with a gauge cock and pulsation dampener shall be furnished for installation adjacent to pressure switches.

2.10.3 Air Receivers

Receivers shall be designed for 200 psi working pressure. Receivers shall be factory air tested to 1-1/2 times the working pressure. Receivers shall be equipped with safety relief valves and accessories, including pressure gauges and automatic and manual drains. The outside of air receivers may be galvanized or supplied with commercial enamel finish. Receivers shall be designed and constructed in accordance with ASME BPV VIII Div 1 and shall have the design working pressures specified herein. A display of the ASME seal on the receiver or a certified test report from an approved independent testing laboratory indicating conformance to the ASME Code shall be provided.

2.10.4 Pressure Regulators

The air system shall be provided with the necessary regulator valves to maintain the desired pressure for the installed equipment. Regulators shall be designed for a maximum inlet pressure of 175 psi and a maximum temperature of 200 degrees F. Regulators shall be single-seated, pilot-operated with valve plug, bronze body and trim or equal, and threaded connections. The regulator valve shall include a pressure gauge and shall be provided with an adjustment screw for adjusting the pressure differential from 0 to 150 psi.

2.11 DOMESTIC WATER SERVICE METER

Cold water meter shall be of the positive displacement type conforming to AWWA C700. Meter register may be round or straight reading type. Meter shall be provided with a pulse generator.

This section revised
by AMDT 0001

PART 3 EXECUTION

3.1 GENERAL INSTALLATION REQUIREMENTS

Hubless cast-iron pipe shall not be installed under concrete floor slabs. Piping located in air plenums shall conform to NFPA 90A requirements. Piping located in shafts that constitute air ducts or that enclose air ducts shall be noncombustible in accordance with NFPA 90A. The plumbing system shall be installed complete with necessary fixtures, fittings, traps, valves, and accessories. Water and drainage piping shall be extended 5 feet outside the building, unless otherwise indicated. A full port ball valve and drain shall be installed on the water service line inside the building approximately 6 inches above the floor from point of entry. Piping shall be connected to the exterior service lines or capped or plugged if the exterior service is not in place. Sewer and water pipes shall be laid in separate trenches, except when otherwise shown. Exterior underground utilities shall be at least 12 inches below the average local frost depth or as otherwise indicated on the drawings. If trenches are closed or the pipes are otherwise covered before being connected to the service lines, the location of the end of each plumbing utility shall be marked with a stake or other acceptable means. Valves shall be installed with control no lower than the valve body.

3.1.1 Water Pipe, Fittings, and Connections

3.1.1.1 Utilities

The piping shall be extended to fixtures, outlets, and equipment. The hot-water and cold-water piping system shall be arranged and installed to permit draining. The supply line to each item of equipment or fixture, except faucets, flush valves, or other control valves which are supplied with integral stops, shall be equipped with a shutoff valve to enable isolation of the item for repair and maintenance without interfering with operation of other equipment or fixtures. Supply piping to fixtures, faucets, hydrants, shower heads, and flushing devices shall be anchored to prevent movement.

3.1.1.2 Cutting and Repairing

The work shall be carefully laid out in advance, and unnecessary cutting of construction shall be avoided. Damage to building, piping, wiring, or equipment as a result of cutting shall be repaired by mechanics skilled in the trade involved.

3.1.1.3 Protection of Fixtures, Materials, and Equipment

Pipe openings shall be closed with caps or plugs during installation. Fixtures and equipment shall be tightly covered and protected against dirt, water, chemicals, and mechanical injury. Upon completion of the work, the fixtures, materials, and equipment shall be thoroughly cleaned, adjusted, and operated. Safety guards shall be provided for exposed rotating equipment.

This section revised
by AMDT 0001

3.1.1.4 Mains, Branches, and Runouts

Piping shall be installed as indicated. Pipe shall be accurately cut and worked into place without springing or forcing. Structural portions of the building shall not be weakened. Aboveground piping shall run parallel with the lines of the building, unless otherwise indicated. Branch pipes from service lines may be taken from top, bottom, or side of main, using crossover fittings required by structural or installation conditions. Supply pipes, valves, and fittings shall be kept a sufficient distance from other work and other services to permit not less than 1/2 inch between finished covering on the different services. Bare and insulated water lines shall not bear directly against building structural elements so as to transmit sound to the structure or to prevent flexible movement of the lines. Water pipe shall not be buried in or under floors unless specifically indicated or approved. Changes in pipe sizes shall be made with reducing fittings. Use of bushings will not be permitted except for use in situations in which standard factory fabricated components are furnished to accommodate specific excepted installation practice. Change in direction shall be made with fittings.

3.1.1.5 Pipe Drains

Pipe drains indicated shall consist of 3/4 inch hose bibb with renewable seat and ball valve ahead of hose bibb. At other low points, 3/4 inch brass plugs or caps shall be provided. Disconnection of the supply piping at the fixture is an acceptable drain.

3.1.1.6 Expansion and Contraction of Piping

Allowance shall be made throughout for expansion and contraction of water pipe. Each hot-water and hot-water circulation riser shall have expansion loops or other provisions such as offsets, changes in direction, etc., where indicated and/or required. Risers shall be securely anchored as required or where indicated to force expansion to loops. Branch connections from risers shall be made with ample swing or offset to avoid undue strain on fittings or short pipe lengths. Horizontal runs of pipe over 50 feet in length shall be anchored to the wall or the supporting construction about midway on the run to force expansion, evenly divided, toward the ends. Sufficient flexibility shall be provided on branch runouts from mains and risers to provide for expansion and contraction of piping. Flexibility shall be provided by installing one or more turns in the line so that piping will spring enough to allow for expansion without straining.

3.1.1.7 Commercial-Type Water Hammer Arresters

Commercial-type water hammer arresters shall be provided on hot- and cold-water supplies and shall be located as generally indicated, with precise location and sizing to be in accordance with PDI WH 201. Water hammer arresters, where concealed, shall be accessible by means of access doors or removable panels. Commercial-type water hammer arresters shall conform to PDI WH 201. Vertical capped pipe columns will not be permitted.

This section revised
by AMDT 0001

3.1.2 Compressed Air Piping (Non-Oil Free)

Compressed air piping shall be installed as specified for water piping and suitable for 125 psig working pressure. Compressed air piping shall have supply lines and discharge terminals legibly and permanently marked at both ends with the name of the system and the direction of flow.

3.1.3 Joints

Installation of pipe and fittings shall be made in accordance with the manufacturer's recommendations. Mitering of joints for elbows and notching of straight runs of pipe for tees will not be permitted. Joints shall be made up with fittings of compatible material and made for the specific purpose intended.

3.1.3.1 Threaded

Threaded joints shall have American Standard taper pipe threads conforming to ASME B1.20.1. Only male pipe threads shall be coated with graphite or with an approved graphite compound, or with an inert filler and oil, or shall have a polytetrafluoroethylene tape applied.

3.1.3.2 Union and Flanged

Unions, flanges and mechanical couplings shall not be concealed in walls, ceilings, or partitions. Unions shall be used on pipe sizes 2-1/2 inches and smaller; flanges shall be used on pipe sizes 3 inches and larger.

3.1.3.3 Cast Iron Soil, Waste and Vent Pipe

Bell and spigot compression and hubless gasketed clamp joints for soil, waste and vent piping shall be installed per the manufacturer's recommendations.

3.1.3.4 Copper Tube and Pipe

The tube or fittings shall not be annealed when making connections. Connections shall be made with a multiflame torch.

a. Brazed. Brazed joints shall be made in conformance with AWS B2.2, MSS SP-73, and CDA-02 with flux and are acceptable for line sizes. Copper to copper joints shall include the use of copper-phosphorus or copper-phosphorus-silver brazing metal without flux. Brazing of dissimilar metals (copper to bronze or brass) shall include the use of flux with either a copper-phosphorus, copper-phosphorus-silver or a silver brazing filler metal.

b. Soldered. Soldered joints shall be made with flux and are only acceptable for lines 2 inches and smaller. Soldered joints shall conform to ASME B31.5 and CDA-02.

3.1.3.5 Other Joint Methods

This section revised
by AMDT 0001

3.1.4 Dissimilar Pipe Materials

Connections between ferrous and non-ferrous copper pipe shall be made with dielectric waterways.

3.1.5 Corrosion Protection for Buried Pipe and Fittings

3.1.5.1 Cast Iron and Ductile Iron

Pressure pipe shall have protective coating, a cathodic protection system, and joint bonding. Pipe, fittings, and joints shall have a protective coating. The protective coating shall be completely encasing polyethylene tube or sheet in accordance with AWWA C105. Joints and fittings shall be cleaned, coated with primer, and wrapped with tape. The pipe shall be cleaned, coated, and wrapped prior to pipe tightness testing. Joints and fittings shall be cleaned, coated, and wrapped after pipe tightness testing. Tape shall conform to AWWA C203 and shall be applied with a 50 percent overlap. Primer shall be as recommended by the tape manufacturer.

3.1.6 Pipe Sleeves and Flashing

Pipe sleeves shall be furnished and set in their proper and permanent location.

3.1.6.1 Sleeve Requirements

Pipes passing through concrete or masonry walls or concrete floors or roofs shall be provided with pipe sleeves fitted into place at the time of construction. Sleeves are not required for cast-iron soil pipe passing through concrete slab on grade, except where penetrating a membrane waterproof floor. A modular mechanical type sealing assembly may be installed in lieu of a waterproofing clamping flange and caulking and sealing of annular space between pipe and sleeve. The seals shall consist of interlocking synthetic rubber links shaped to continuously fill the annular space between the pipe and sleeve with corrosion-protected carbon steel bolts, nuts, and pressure plates. The links shall be loosely assembled with bolts to form a continuous rubber belt around the pipe with a pressure plate under each bolt head and each nut. After the seal assembly is properly positioned in the sleeve, tightening of the bolt shall cause the rubber sealing elements to expand and provide a watertight seal between the pipe and the sleeve. Each seal assembly shall be sized as recommended by the manufacturer to fit the pipe and sleeve involved. Sleeves shall not be installed in structural members, except where indicated or approved. Rectangular and square openings shall be as detailed. Each sleeve shall extend through its respective floor, or roof, and shall be cut flush with each surface, except for special circumstances. Pipe sleeves passing through floors in wet areas such as mechanical equipment rooms, lavatories, kitchens, and other plumbing fixture areas shall extend a minimum of 1 inch above the finished floor. Unless otherwise indicated, sleeves shall be of a size to provide a minimum of 1/4 inch clearance between bare pipe and inside of sleeve or between jacket over insulation and sleeves. Sleeves in bearing walls shall be steel pipe or cast-iron pipe. Sleeves for membrane waterproof floors shall be steel pipe or cast-iron pipe. Membrane clamping devices shall be provided on pipe sleeves for waterproof floors. Sleeves in nonbearing walls or ceilings may be steel pipe, cast-iron pipe, or galvanized sheet metal with

This section revised
by AMDT 0001

lock-type longitudinal seam. Except as otherwise specified, the annular space between pipe and sleeve, or between jacket over insulation and sleeve, shall be sealed as indicated with sealants conforming to ASTM C 920 and with a primer, backstop material and surface preparation as specified in Section 07900 JOINT SEALING. Pipes passing through sleeves in concrete floors over crawl spaces shall be sealed as specified above. The annular space between pipe and sleeve or between jacket over insulation and sleeve shall not be sealed for interior walls which are not designated as fire rated. Sleeves through below-grade walls in contact with earth shall be recessed l/2 inch from wall surfaces on both sides. Annular space between pipe and sleeve shall be filled with backing material and sealants in the joint between the pipe and masonry wall as specified above. Sealant selected for the earth side of the wall shall be compatible with dampproofing/waterproofing materials that are to be applied over the joint sealant.

3.1.6.2 Flashing Requirements

Pipes passing through roof or floor waterproofing membrane shall be installed through a 16 ounce copper flashing, each within an integral skirt or flange. Flashing shall be suitably formed, and the skirt or flange shall extend not less than 8 inches from the pipe and shall be set over the roof or floor membrane in a solid coating of bituminous cement. The flashing shall extend up the pipe a minimum of 10 inches. For cleanouts, the flashing shall be turned down into the hub and caulked after placing the ferrule. Pipes passing through pitched roofs shall be flashed, using lead or copper flashing, with an adjustable integral flange of adequate size to extend not less than 8 inches from the pipe in all directions and lapped into the roofing to provide a watertight seal. The annular space between the flashing and the bare pipe or between the flashing and the metal-jacket-covered insulation shall be sealed as indicated. Flashing for dry vents shall be turned down into the pipe to form a waterproof joint. Pipes, up to and including 10 inches in diameter, passing through roof or floor waterproofing membrane may be installed through a cast-iron sleeve with caulking recess, anchor lugs, flashing-clamp device, and pressure ring with brass bolts. Flashing shield shall be fitted into the sleeve clamping device. Pipes passing through wall waterproofing membrane shall be sleeved as described above. A waterproofing clamping flange shall be installed.

3.1.6.3 Optional Counterflashing

Instead of turning the flashing down into a dry vent pipe, or caulking and sealing the annular space between the pipe and flashing or metal-jacket-covered insulation and flashing, counterflashing may be accomplished by utilizing the following:

a. A standard roof coupling for threaded pipe up to 6 inches in diameter.

b. A tack-welded or banded-metal rain shield around the pipe.

3.1.6.4 Pipe Penetrations of Slab on Grade Floors

Where pipes, fixture drains, floor drains, cleanouts or similar items penetrate slab on grade floors, except at penetrations of floors with waterproofing membrane as specified in paragraphs Flashing Requirements and

This section revised
by AMDT 0001

Waterproofing, a groove 1/4 to 1/2 inch wide by 1/4 to 3/8 inch deep shall be formed around the pipe, fitting or drain. The groove shall be filled with a sealant as specified in Section 07900 JOINT SEALING.

3.1.7 Fire Seal

Where pipes pass through fire walls, fire-partitions, fire-rated pipe chase walls or floors above grade, a fire seal shall be provided as specified in Section 07270 FIRESTOPPING.

3.1.8 Supports

3.1.8.1 General

Hangers used to support piping 2 inches and larger shall be fabricated to permit adequate adjustment after erection while still supporting the load. Pipe guides and anchors shall be installed to keep pipes in accurate alignment, to direct the expansion movement, and to prevent buckling, swaying, and undue strain. Piping subjected to vertical movement when operating temperatures exceed ambient temperatures shall be supported by variable spring hangers and supports or by constant support hangers. In the support of multiple pipe runs on a common base member, a clip or clamp shall be used where each pipe crosses the base support member. Spacing of the base support members shall not exceed the hanger and support spacing required for an individual pipe in the multiple pipe run.

3.1.8.2 Pipe Supports and Structural Bracing, Seismic Requirements

Piping and attached valves shall be supported and braced to resist seismic loads as shown. Structural steel required for reinforcement to properly support piping, headers, and equipment, but not shown, shall be provided. Material used for supports shall be as specified in Section 05120 STRUCTURAL STEEL.

3.1.8.3 Pipe Hangers, Inserts, and Supports

Installation of pipe hangers, inserts and supports shall conform to MSS SP-58 and MSS SP-69, except as modified herein.

a. Types 5, 12, and 26 shall not be used.

b. Type 3 shall not be used on insulated pipe.

c. Type 18 inserts shall be secured to concrete forms before concrete is placed. Continuous inserts which allow more adjustment may be used if they otherwise meet the requirements for type 18 inserts.

d. Type 19 and 23 C-clamps shall be torqued per MSS SP-69 and shall have both locknuts and retaining devices furnished by the manufacturer. Field-fabricated C-clamp bodies or retaining devices are not acceptable.

e. Type 20 attachments used on angles and channels shall be furnished with an added malleable-iron heel plate or adapter.

f. Type 24 may be used only on trapeze hanger systems or on fabricated frames.

This section revised
by AMDT 0001

g. Type 40 shields shall:

(1) Be used on insulated pipe less than 4 inches.

(2) Have a high density insert for pipe 2 inches and larger and for smaller pipe sizes when the insulation is suspected of being visibly compressed, or distorted at or near the shield/insulation interface. High density inserts shall have a density of 8 pcf or greater.

h. Horizontal pipe supports shall be spaced as specified in MSS SP-69 and a support shall be installed not over 1 foot from the pipe fitting joint at each change in direction of the piping. Pipe supports shall be spaced not over 5 feet apart at valves. Horizontal pipe runs shall include allowances for expansion and contraction.

I. Vertical pipe shall be supported at each floor, except at slab-on-grade, at intervals of not more than 15 feet nor more than 8 feet from end of risers, and at vent terminations. Vertical pipe risers shall include allowances for expansion and contraction.

j. Type 40 shields used on insulated pipe shall have high density inserts with a density of 8 pcf or greater.

k. Pipe hangers on horizontal insulated pipe shall be the size of the outside diameter of the insulation. The insulation shall be continuous through the hanger on all pipe sizes and applications.

3.1.9 Pipe Cleanouts

Pipe cleanouts shall be the same size as the pipe except that cleanout plugs larger than 4 inches will not be required. A cleanout installed in connection with cast-iron soil pipe shall consist of a long-sweep 1/4 bend or one or two 1/8 bends extended to the place shown. An extra-heavy cast-brass or cast-iron ferrule with countersunk cast-brass head screw plug shall be caulked into the hub of the fitting and shall be flush with the floor. Cleanouts in connection with other pipe, where indicated, shall be T-pattern, 90-degree branch drainage fittings with cast-brass screw plugs. Plugs shall be the same size as the pipe up to and including 4 inches. Cleanout tee branches with screw plug shall be installed at the foot of soil and waste stacks, at the foot of interior downspouts, on each connection to building storm drain where interior downspouts are indicated, and on each building drain outside the building. Cleanout tee branches may be omitted on stacks in single story buildings with slab-on-grade construction or where less than 18 inches of crawl space is provided under the floor. Cleanouts on pipe concealed in partitions shall be provided with chromium plated bronze, nickel bronze, nickel brass or stainless steel flush type access cover plates. Round access covers shall be provided and secured to plugs with securing screw. Square access covers may be provided with matching frames, anchoring lugs and cover screws. Cleanouts in finished walls shall have access covers and frames installed flush with the finished wall. Cleanouts installed in finished floors subject to foot traffic shall be provided with a chrome-plated cast brass, nickel brass, or nickel bronze cover secured to the plug or cover frame and set flush with

This section revised
by AMDT 0001

the finished floor. Heads of fastening screws shall not project above the cover surface. Where cleanouts are provided with adjustable heads, the heads shall be cast iron.

3.2 WATER HEATERS

3.2.1 Relief Valves

No valves shall be installed between a relief valve and its water heater. The PT relief valve shall be installed where the valve actuator comes in contact with the hottest water in the heater. Whenever possible, the relief valve shall be installed directly in a tapping in the tank or heater; otherwise, the PT valve shall be installed in the hot-water outlet piping. A vacuum relief valve shall be provided on the cold water supply line to the water heater and mounted above and within 6 inches above the top of the tank or water heater.

3.2.2 Installation of Gas-Fired Water Heater

Installation shall conform to NFPA 54 for gas fired.

3.2.3 Connections to Water Heaters

Connections of metallic pipe to water heaters shall be made with dielectric unions or flanges.

3.3 FIXTURES AND FIXTURE TRIMMINGS

Angle stops, straight stops, stops integral with the faucets, or concealed type of lock-shield, and loose-key pattern stops for supplies with threaded, sweat or solvent weld inlets shall be furnished and installed with fixtures. Where connections between copper tubing and faucets are made by rubber compression fittings, a beading tool shall be used to mechanically deform the tubing above the compression fitting. Exposed traps and supply pipes for fixtures and equipment shall be connected to the rough piping systems at the wall, unless otherwise specified under the item. Floor and wall escutcheons shall be as specified. Drain lines and hot water lines of fixtures for handicapped personnel shall be insulated and do not require polished chrome finish. Plumbing fixtures and accessories shall be installed within the- space shown.

3.3.1 Fixture Connections

Where space limitations prohibit standard fittings in conjunction with the cast-iron floor flange, special short-radius fittings shall be provided. Connections between earthenware fixtures and flanges on soil pipe shall be made gastight and watertight with a closet-setting compound or neoprene gasket and seal. Use of natural rubber gaskets or putty will not be permitted. Fixtures with outlet flanges shall be set the proper distance from floor or wall to make a first-class joint with the closet-setting compound or gasket and fixture used.

This section revised
by AMDT 0001

3.3.2 Flushometer Valves

Flushometer valves shall be secured to prevent movement by anchoring the long finished top spud connecting tube to wall adjacent to valve with approved metal bracket.

3.3.3 Height of Fixture Rims Above Floor

Lavatories shall be mounted with rim 31 inches above finished floor. Wall-hung drinking fountains and water coolers shall be installed with rim 42 inches above floor. Installation of fixtures for use by the physically handicapped shall be in accordance with CABO A117.1.

3.3.4 Shower Outfits

The area around the water supply piping to the mixing valves and behind the escutcheon plate shall be made watertight by caulking or gasketing.

3.3.5 Fixture Supports

Fixture supports for off-the-floor lavatories, urinals, water closets, and other fixtures of similar size, design, and use, shall be of the chair-carrier type. The carrier shall provide the necessary means of mounting the fixture, with a foot or feet to anchor the assembly to the floor slab. Adjustability shall be provided to locate the fixture at the desired height and in proper relation to the wall.

3.3.5.1 Support for Steel Stud Frame Partitions

Chair carrier shall be used. The anchor feet and tubular uprights shall be of the heavy duty design; and feet (bases) shall be steel and welded to a square or rectangular steel tube upright. Wall plates, in lieu of floor-anchored chair carriers, shall be used only if adjoining steel partition studs are suitably reinforced to support a wall plate bolted to these studs.

3.3.5.2 Wall-Mounted Water Closet Gaskets

Where wall-mounted water closets are provided, reinforced wax, treated felt, or neoprene gaskets shall be provided. The type of gasket furnished shall be as recommended by the chair-carrier manufacturer.

3.3.6 Backflow Prevention Devices

Plumbing fixtures, equipment, and pipe connections shall not cross connect or interconnect between a potable water supply and any source of nonpotable water. Backflow preventers shall be installed where indicated and in accordance with NAPHCC-01 at all other locations necessary to preclude a cross-connect or interconnect between a potable water supply and any nonpotable substance. In addition backflow preventers shall be installed at all locations where the potable water outlet is below the flood level of the equipment, or where the potable water outlet will be located below the level of the nonpotable substance. Backflow preventers shall be located so that no part of the device will be submerged. Backflow preventers shall be of sufficient size to allow unrestricted flow of water to the equipment, and preclude the backflow of any nonpotable substance into the potable

This section revised
by AMDT 0001

water system. Access shall be provided for maintenance and testing. Each device shall be a standard commercial unit.

3.3.7 Access Panels

Access panels shall be provided for concealed valves and controls, or any item requiring inspection or maintenance. Access panels shall be of sufficient size and located so that the concealed items may be serviced, maintained, or replaced. Access panels shall be as specified in Section 05500 MISCELLANEOUS METAL.

3.3.8 Sight Drains

Sight drains shall be installed so that the indirect waste will terminate 2 inches above the flood rim of the funnel to provide an acceptable air gap.

3.3.9 Traps

Each trap shall be placed as near the fixture as possible, and no fixture shall be double-trapped. Traps installed on cast-iron soil pipe shall be cast iron. Traps installed on steel pipe or copper tubing shall be recess-drainage pattern, or brass-tube type.

3.3.10 Shower Pans

Before installing shower pan, subfloor shall be free of projections such as nail heads or rough edges of aggregate. Drain shall be a bolt-down, clamping-ring type with weepholes, installed so the lip of the subdrain is flush with subfloor.

3.3.10.1 General

The floor of each individual shower, the shower-area portion of combination shower and drying room, and the entire shower and drying room where the two are not separated by curb or partition, shall be made watertight with a shower pan fabricated in place. The shower pan material shall be cut to size and shape of the area indicated, in one piece to the maximum extent practicable, allowing a minimum of 6 inches for turnup on walls or partitions, and shall be folded over the curb with an approximate return of 1/4 of curb height. The upstands shall be placed behind any wall or partition finish. Subflooring shall be smooth and clean, with nailheads driven flush with surface, and shall be sloped to drain. Shower pans shall be clamped to drains with the drain clamping ring.

3.3.10.2 Nonplasticized Chlorinated Polyethylene Shower Pans

Corners of nonplasticized chlorinated polyethylene shower pans shall be folded against the upstand by making a pig-ear fold. Hot-ai,~ gun or heat lamp shall be used in making corner folds. Each pig-ear corner fold shall be nailed or stapled 1/2 inch from the upper edge to hold it in place. Nails shall be galvanized large-head roofing nails. On metal framing or studs, approved duct tape shall be used to secure pig-ear fold and membrane. Where no backing is provided between the studs, the membrane slack shall be taken up by pleating and stapling or nailing to studding 1/2 inch from upper edge. To adhere the membrane to vertical surfaces, the back of the membrane and the surface to which it will be applied shall be

This section revised
by AMDT 0001

coated with adhesive that becomes dry to the touch in 5 to 10 minutes, after which the membrane shall be pressed into place. Surfaces to be solvent-welded shall be clean. Surfaces to be joined with xylene shall be initially sprayed and vigorously cleaned with a cotton cloth, followed by final coating of xylene and the joining of the surfaces by roller or equivalent means. If ambient or membrane temperatures are below 40 degrees F the membrane and the joint shall be heated prior to application of xylene. Heat may be applied with hot-air gun or heat lamp, taking precautions not to scorch the membrane. Adequate ventilation and wearing of gloves arc required when working with xylene. Membrane shall be pressed into position on the drain body, and shall be cut and fit to match so that membrane can be properly clamped and an effective gasket-type seal provided. On wood subflooring, two layers of 15 pound dry felt shall be installed prior to installation of shower pan to ensure a smooth surface for installation.

3.3.10.3 Nonplasticized Polyvinyl Chloride (PVC) Shower Pans

Nonplasticized PVC shall be turned up behind walls or wall surfaces a distance of not less than 6 inches in room areas and 3 inches above curb level in curbed spaces with sufficient material to fold over and fasten to outside face of curb. Corners shall be pig-ear type and folded between pan and studs. Only top 1 inch of upstand shall be nailed to hold in place. Nails shall be galvanized large-head roofing type. Approved duct tape shall be used on metal framing or studs to secure pig-ear fold and membrane. Where no backing is provided between studs, the membrane slack shall be taken up by pleating and stapling or nailing to studding at top inch of upstand. To adhere the membrane to vertical surfaces, the back of the membrane and the surface to which it is to be applied shall be coated with adhesive that becomes dry to the touch in 5 to 10 minutes, after which the membrane shall be pressed into place. Trim for drain shall be exactly the size of drain opening. Bolt holes shall be pierced to accommodate bolts with a tight fit. Adhesive shall be used between pan and subdrain. Clamping ring shall be bolted firmly. A small amount of gravel or porous materials shall be placed at weepholes so that holes remain clear when setting bed is poured. Membrane shall be solvent welded with PVC solvent cement. Surfaces to be solvent welded shall be clean {free of grease and grime). Sheets shall be laid on a flat surface with an overlap of about 2 inches. Top edge shall be folded back and surface primed with a PVC primer. PVC cement shall be applied and surfaces immediately placed together, while still wet. Joint shall be lightly rolled with a paint roller, then as the joint sets shall be rolled firmly but not so hard as to distort the material. In long lengths, about 2 or 3 feet at a time shall be welded. On-wood subflooring, two layers of 15 pound felt shall be installed prior to installation of shower pan to ensure a smooth surface installation.

3.4 VIBRATION-ABSORBING FEATURES

Mechanical equipment, including compressors and pumps, shall be isolated from the building structure by approved vibration-absorbing features, unless otherwise shown. Each foundation shall include an adequate number of standard isolation units. Each unit shall consist of machine and floor or foundation fastening, together with intermediate isolation material, and shall be a standard product with printed load rating. Piping connected to mechanical equipment shall be provided with flexible connectors.

This section revised
by AMDT 0001

3.4.1 Tank-Mounted Compressors

Floor attachment shall be as recommended by compressor manufacturer.

3.5 IDENTIFICATION SYSTEMS

Piping identification shall be as specified in Section 15190 IDENTIFICATION OF PIPING.

3.6 ESCUTCHEONS

Escutcheons shall be provided at finished surfaces where bare or insulated piping, exposed to view, passes through floors, walls, or ceilings, except in boiler, utility, or equipment rooms. Escutcheons shall be fastened securely to pipe or pipe covering and shall be satin-finish, corrosion-resisting steel, polished chromium-plated zinc alloy, or polished chromium-plated copper alloy. Escutcheons shall be either one-piece or split-pattern, held in place by internal spring tension or setscrew.

3.7 PAINTING

Painting of pipes, hangers, supports, and other iron work, either in concealed spaces or exposed spaces, is specified in Section 09900 PAINTING, GENERAL.

3.8 TESTS FLUSHING AND STERILIZATION

3.8.1 Plumbing System

The plumbing system shall be tested in accordance with NAPHCC-01.

3.8.1.1 Test of Backflow Prevention Assemblies

Backflow prevention assembly shall be tested using gauges specifically designed for the testing of backflow prevention assemblies. Gauges shall be tested annually for accuracy in accordance with the University of Southern California's Foundation of Cross Connection Control and Hydraulic Research or the American Water Works Association Manual of Cross Connection (Manual M-14). Report form for each assembly shall include, as a minimum, the following:

Data on Device
Data on Testing Firm
Type of Assembly
Name
Manufacturer
Address
Model Number
Certified Tester
Serial Number
Certified Tester No.
Size
Date of Test

This section revised
by AMDT 0001

Location
Test Pressure Readings
Serial Number and Test Data of Gauges

If the unit fails to meet specified requirements, the unit shall be repaired and retested.

3.8.1.2 DELETED

3.8.1.3 Compressed Air Piping (Nonoil-Free)

Piping systems shall be filled with oil-free dry air or gaseous nitrogen to 150 psig and hold this pressure for 2 hours with no drop in pressure.

3.8.2 Defective Work

If inspection or test shows defects, such defective work or material shall be replaced or repaired as necessary and inspection and tests shall be repeated. Repairs to piping shall be made with new materials. Caulking of screwed joints or holes will not be permitted.

3.8.3 System Flushing

After tests are completed, potable water piping shall be flushed. In general, sufficient water shall be used to produce a minimum water velocity of 2.5 feet per second through piping being flushed. Flushing shall be continued until discharge water shows no discoloration. System shall be drained at low points. Strainer screens shall be removed, cleaned, and replaced in line. After flushing and cleaning, systems shall be prepared for service by immediately filling water piping with clean, fresh potable water. Any stoppage, discoloration, or other damage to the finish, furnishings, or parts of the building due to the Contractor's failure to properly clean the piping system shall be repaired by the Contractor. When the work is complete, the hot-water system shall be adjusted for uniform circulation. Flushing devices and automatic control systems shall be adjusted for proper operation.

3.8.4 Operational Test

Upon completion of and prior to acceptance of the installation, the Contractor shall subject the plumbing system to operating tests to demonstrate satisfactory functional and operational efficiency. Such operating tests shall cover a period of not less than 8 hours for each system and shall include the following information in a report with conclusion as to the adequacy of the system:

a. Time, date, and duration of test.

b. Water pressures at the most remote and the highest fixtures.

c. Operation of each fixture and fixture trim.

d. Operation of each valve, hydrant, and faucet.

e. Pump suction and discharge pressures.

This section revised
by AMDT 0001

f. Temperature of each domestic hot-water supply.

g. Operation of each floor anc roof drain by flooding with water.

h. Operation of each vacuum breaker and backflow preventer.

I. Compressed air readings at each compressor and at each outlet. Each indicating instrument shall be read at 1/2 hour intervals. The report of the test shall be submitted in quadruplicate. The Contractor shall furnish instruments, equipment, and personnel required for the tests; the Government will furnish the necessary water and electricity.

3.8.5 Disinfection

After pressure tests have been made, the entire domestic hot- and cold-water distribution system sh ll be sterilized. System shall be thoroughly flushed with water of sufficient velocity until all entrained dirt and other foreign material have been removed, before introducing chlorinating material. The chlorinating material shall be hypochlorites or liquid chlorine. Water chlorination procedure shall be in accordance with AWWA M20. The chlorinating material shall be fed into the water piping system at a constant rate at a concentration of at least 50 parts per million (ppm). A properly adjusted hypochlorite solution injected into the main with a hypochlorinator, or liquid chlorine injected into the main through a solution-feed chlorinator and booster pump, shall be used. The chlorine residual shall be checked at intervals to ensure that the proper level is maintained. Chlorine application shall continue until the entire main is filled. The water shall remain in the system for a minimum of 24 hours. Each valve in the system being sterilized shall be opened and closed several times during the contact period to ensure its proper disinfection. Following the 24-hour period, no less than 25 ppm chlorine residual shall remain in the system. Water tanks shall be disinfected by the addition of chlorine directly to the filling water. Following a 6 hour period, no less than 50 ppm chlorine residual shall remain in the tank. The system including the tanks shall then be flushed with clean water until the residual chlorine is reduced to less than one part per million. During the flushing period each valve and faucet shall be opened and closed several times. From several points in the system the Contracting Officer will take samples of water in properly sterilized containers for bacterial examination. The samples of water shall be tested for total coliform organisms (coliform bacteria, fecal coliform, streptococcal, and other bacteria) in accordance with AWWA-01 by an independent testing laboratory employed by the Contract and approved by the Contracting Officer. The testing method used shall be either the multiple-tube fermentation technique or the membrane-filter technique. The sterilizing shall be repeated until tests indicate the absence of coliform organisms (zero mean coliform density per 100 milliliters) in the samples for at least 2 full days. The system will not be accepted until satisfactory bacteriological results have been obtained.

This section revised
by AMDT 0001

3.9 PLUMBING FIXTURE SCHEDULE

P-1 WATER CLOSET:

Elongated bowl, wall mounted.

Gasket shall be wax type.

Seat - CID A-A-238, Type A, white plastic, elongated, open front.

Flush Tank - An adequate quantity of water shall be provided to flush and clean the fixture served. The water supply to flush tanks equipped for manual flushing shall be controlled by a float valve or other automatic device designed to refill the tank after each discharge, and to completely shut off the water flow to the tank when the tank is filled to operational capacity. Water closets having their flush valve seat located below the flood level rim of the closet bowl shall have a ballcock installed within a sheath or in a separate and isolated compartment of the tank, both to have visible discharge onto the floor in case of failure. Provision shall be made to automatically supply water to the fixture so as to refill the trap seal after each flushing. ballcocks shall meet ASSE 1002.

P-2 WATER CLOSET HANDICAPPED:

Top rim of bowl shall be 18 inches above the floor; other features are the same as P-1.

P-3 URINAL:

Wall hanging, with integral trap and extended shields, ASME A112.19.2M siphon jet. Top supply connection, back outlet.

Flushometer Valve - The maximum water use shall be 1 gallon per flush.

P-4 LAVATORY:

Manufacturer's standard sink depth, enameled cast iron ASME A112.19.1M counter top, rectangular.

Faucet - Faucets shall be single control, mixing type. Faucets shall have metal replaceable cartridge control unit or metal cartridge units with diaphragm which can be replaced without special tools. Valves and handles shall be copper alloy. The flow shall be limited to 2.5 g.p.m. at a flowing pressure of 80 psi.

Handles - Lever type. Cast, formed, or drop forged copper alloy.

Drain - Pop-up drain shall include stopper, lift rods, jam nut, washer, and tail piece. See paragraph FIXTURES for optional plastic accessories.

P-5 WHEELCHAIR LAVATORY:

Vitreous china, ASME A112.19.2M, wheelchair lavatory with wrist or elbow controls 20 inches wide x 27 inches deep with gooseneck spout. The flow shall be limited to 2.5 g.p.m. at a flowing water pressure of 80 psi.

This section revised
by AMDT 0001

Drain - Strainer shall be copper alloy or stainless steel.

P-6 KITCHEN SINK:

Ledge back with holes for faucet and spout double bowl 42 x 21 inches stainless steel ASME A112.19.3M.

Faucet and Spout - Cast or wrought copper alloy. Aerator shall have internal threads. The flow shall be limited to 2.5 g.p.m. at a flowing water pressure of 80 psi.

Handle - Cast copper alloy, wrought copper alloy, or stainless steel. Single lever type.

Drain Assembly - Plug, cup strainer, crossbars, jam nuts, washers, couplings, stopper, etc. shall be copper alloy or stainless steel.

P-7 SERVICE SINK:

Enameled cast iron ASME A112.19.1M, copper alloy or stainless steel ASME A112.19.3M corner, floor mounted 28 inches square, 6-3/4 inches deep.

Faucet and Spout - Cast or wrought copper alloy, with top or bottom brace, with backflow preventer. Faucets shall have replaceable seat and the washer shall rotate onto the seat. Handles shall be lever type. Strainers shall have internal threads.

Drain Assembly - Plug, cup strainer, crossbars, jam nuts, washers, couplings, stopper, etc. shall be copper alloy or stainless steel.

Trap - Cast iron, minimum 2 inch diameter.

P-8 SHOWER:

Shower heads, CID A-A-240 other than emergency showers, shall include a non-removable, tamperproof device to limit water flow to 2.5 g.p.m. when tested in accordance with ASME A112.18.1M.

Wall Mounted: Shower head shall be nonadjustable spray, stainless steel or chromium plated brass with ball joint. Handles shall be manufacturer's option. Control valves shall be copper alloy and have metal integral parts of copper alloy, nickel alloy, or stainless steel. Valves shall be mechanical mixing, single lever type. Shower head shall be vandalproof with integral back.

P-9 EMERGENCY EYEWASH:

Head for Eye Wash. Control shall be 1/2 inch stay-open type control valve. Unit shall be corrosion-resisting steel and shall be wall mounted.

P-10 WATER COOLER DRINKING FOUNTAINS:

Water cooler drinking fountains shall: be self contained, conform to ARI 1010, use one of the fluorocarbon gases conforming to ARI 700 and ASHRAE 34 which has an Ozone Depletion Potential of less than or equal to 0.05, have a capacity to deliver 8 gph of water at 50 degrees F with an inlet water

This section revised
by AMDT 0001

temperature of 80 degrees F while residing in a room environment of 90 degrees F, and have self-closing valves. Self-closing valves shall have automatic stream regulators, have a flow control capability, have a push button actuation or have a cross-shaped index metal turn handle without a hood. Exposed surfaces of stainless steel shall have No. 4 general polish finish. Spouts shall provide a flow of water at least 4 inches high so as to allow the insertion of a cup or glass under the flow of water. Spout shall be equipped with a plastic safety bubblier guard.

Handicapped - Handicapped units shall be surface wall-mounted. The dimensions shall be 15 inches wide, 20 inches deep, with a back height of 6 to 8 inches. The unit shall clear the floor or ground by at least 8 inches. A clear knee space shall exist between the bottom of the bowl and the floor or ground of at least 27 inches and between the front edge of the bowl and the body of the unit of at least 8 inches. A 8 inch wide clear space shall exist on both sides of the unit. The spout height shall be no more than 36 inches above the floor or ground to the outlet. The spout shall be at the front of the unit and direct the water flow in a trajectory that is parallel or nearly parallel to the front of the unit. The bowl shall be 6-1/2 inches high, made of corrosion resisting steel and be for interior installation. Spout shall be equipped with a plastic safety bubblier guard.

P-ll REFRIGERATOR WALL BOX:

Wall box shall be plastic or stainless steel with sufficient room to house a l/2-inch ball valve, reducer, and compression fitting for connection to a refrigerator ice maker.

3.10 PERFORMANCE OF WATER HEATING EQUIPMENT

Standard rating condition terms are as follows:

EF Energy factor, overall efficiency.

ET Thermal efficiency with 70 degrees F delta T.

EC Combustion efficiency, 100 percent - flue loss when smoke o (trace is permitted).

SL Standby loss in W/sq. ft. based on 80 degrees F delta T, or in percent per hour based on nominal 90 degrees F delta T.

HL Heat loss of tank surface area.

V Storage volume in gallons

3.10.1 Storage Water Heaters

3.10.1.1 Gas

a. Storage capacity of 100 gallons or less, and input rating of 75,000 Btu/h or less: minimum EF shall be 0.62-0.0019V per 10 CFR 430.

This section revised
by AMDT 0001

b. Storage capacity of more than 100 gallons - or input rating more than 75,000 Btu/h: Et shall be 77 percent; maximum SL shall be 1.3+38/V, per ANSI Z21.10.3.

This section revised
by AMDT 0001

TABLE I
PIPE AND FITTING MATERIALS FOR
DRAINAGE, WASTE, AND VENT PIPING SYSTEMS

Item No.	Pipe and Fitting Materials	SERVICE A	B	C	D
1	Cast iron soil pipe and fittings, hub and spigot, ASTM A 74 with compression gaskets	X	X	X	X
2	Cast iron pipe and fittings hubless, CISPI 301 and ASTM A 888		X		X
3	Cast iron drainage fittings, threaded, ASME B16.12 for use with Item 6	X		X	X
4	Cast iron screwed fittings (threaded) ASME B16.4 for use with Item 6				X
5	Malleable-iron threaded fittings, galvanized ASME B16.3 for use with Item 6				X
6	Steel pipe, seamless galvanized, ASTM A S3, Type S, Grade B				X
7	Cast copper alloy solder joint pressure fittings, ASME B16.18 for use with Item 8				X
8	Seamless copper pipe, ASTM B 42				X
9	Cast bronze threaded fittings, ASME B16.15				X
10	Copper drainage tube, (DWV), ASTM B 306	X*	X	X*	X
11	Wrought copper and wrought alloy solder-joint drainage fittings. ASME B16.29	X	X	X	X
12	Cast copper alloy solder joint drainage fittings, DWV, ASME B16.23	X	X	X	X

A - Underground Building Soil, Waste and Storm Drain
B - Aboveground Soil, Waste, Drain In Buildings
C - Underground Vent
D - Aboveground Vent
* - Hard Temper

This section revised
by AMDT 0001

TABLE II
PIPE AND FITTING MATERIALS FOR PRESSURE PIPING SYSTEMS

Item No.	Pipe and Fitting Materials	SERVICE A	B	C	D
1	Malleable-iron threaded fittings, a. Galvanized, ASME B16.3 for use with Item 2a			X	
	b. Same as “a” but not galvanized for use with Item 28			X	
2	Steel pipe: a. Seamless, galvanized, ASTM A 53, Type S, Grade B			X	
	b. Seamless, black, ASTM A 53, Type S, Grade B			X	
3	Seamless red brass pipe, ASTM B 43	X	X		X
4	Seamless copper pipe, ASTM B 42	X	X		X
5	Seamless copper water tube, ASTM B 88	X**	X**	X**	X***
6	Seamless and welded copper distribution tube (Type D) ASTM B 641	X**	X**	X**	X****
7	Cast bronze threaded fittings, ASME B16.15 for use with Items 4 and 5	X	X		X
8	Wrought copper and bronze solder-joint pressure fittings, ASME B16.22 for use with Items 4 and 5	X	X	X	X
9	Cast copper alloy solder-joint pressure fittings, ASME B16.18 for use with Items 4 and 5	X	X	X	X
10	Fittings: brass or bronze; ASME B16.15, and ASME B16.18 ASTM B 828	X	X		
11	Carbon steel pipe unions, socket-welding and threaded, MSS SP-83			X	
12	Nipples, pipe threaded ASTM A 733			X	

This section revised
by AMDT 0001

TABLE II
PIPE AND FITTING MATERIALS FOR PRESSURE PIPING SYSTEMS

Item No.	Pipe and Fitting Materials	SERVICE A	B	C	D

Continued

A - Cold Water Aboveground

B - Hot Water 180 degrees F Maximum Aboveground

C - Compressed Air Lubricated

D - Cold Water Service Below ground

Indicated types are minimum wall thicknesses.

** - Type L - Hard

*** - Type K - Hard temper with brazed joints only or type K-soft temper without joints in or under floors

**** - In or under slab floors only brazed joints

This section revised
by AMDT 0001

TABLE III
STANDARD RATING CONDITIONS AND MINIMUM PERFORMANCE
RATINGS FOR WATER HEATING EQUIPMENT

A. STORAGE WATER HEATERS

FUEL	STORAGE GALLONS	CAPACITY RATING	INPUT TEST PROCEDURE	REQUIRED PERFORMANCE
Gas	100 max.	75,000 Btu/h max.	10 CFR 430	EF 0.62-0.0019V minimum
Gas	100 min. OR	75,000 Btu/h	ANSI Z21.10.3	ET 77 percent; SL 1.3+38/V max.

TERMS:

EF Energy factor, overall efficiency.
ET Thermal efficiency with 70 degrees F delta T.
EC Combustion efficiency, 100 percent - flue loss when smoke 0 (trace is permitted).
SL Standby loss in W/sq. ft. based on 80 degrees F delta T, or in percent per hour based on nominal 90 degrees F delta T.
HL Heat loss of tank surface area
V Storage volume in gallons

-- End of Section --

This section revised
by AMDT 0001

SECTION 15488

GAS PIPING SYSTEMS

PART 1 GENERAL

1.1 REFERENCES

The publications listed below form a part of this specification to the extent referenced. The publications are referred to in the text by basic designation only.

AMERICAN GAS ASSOCIATION (AGA)

AGA-01	(1989) A.G.A. Plastic Pipe Manual for Gas Service

AMERICAN NATIONAL STANDARDS INSTITUTE

ANSI Z21.45	(1992; Z21.4a; Z21.4b) Flexible Connectors of Other Than All-Metal Construction for Gas Appliances

AMERICAN PETROLEUM INSTITUTE (API)

API Spec 6D	(1994) Specification for Pipeline Valves (Gate, Plug, Ball, and Check Valves)

AMERICAN SOCIETY OF MECHANICAL ENGINEERS (ASME)

ASME B1.20.1	(1983; R 1992) Pipe Threads, General Purpose (Inch)
ASME B16.3	(1992) Malleable Iron Threaded Fittings
ASME B16.5	(1988; Errata Oct 88; B16.5a) Pipe Flanges and Flanged Fittings
ASME B16.9	(1993) Factory-Made Wrought Steel Buttwelding Fittings
ASME B16.11	(1991) Forged Fittings, Socket-Welding and Threaded
ASME B16.21	(1992) Nonmetallic Flat Gaskets for Pipe Flanges
ASME B16.33	(1990) Manually Operated Metallic Gas Valves for Use in Gas Piping Systems Up to 125 psig (Sizes 1/2 through 2)
ASME B31.1	(1995) Power Piping
ASME B31.2	(1968) Fuel Gas Piping
ASME B36.10M	(1985; R 1994) Welded and Seamless Wrought Steel Pipe
ASME BPV IX	(1995; Addenda Dec 1995) Boiler and Pressure Vessel Code; Section IX, Welding and Brazing Qualifications

MANUFACTURERS STANDARDIZATION SOCIETY OF THE VALVE AND FITTINGS INDUSTRY (MSS)

MSS SP-25	(1993) Standard Marking System for Valves, Fittings, Flanges and Unions
MSS SP-58	(1993) Pipe Hangers and Supports - Materials, Design and Manufacture
MSS SP-69	(1991) Pipe Hangers and Supports - Selection and Application

NATIONAL FIRE PROTECTION ASSOCIATION (NFPA)

NFPA 54	(1992) National Fuel Gas Code
NFPA 70	(1996) National Electrical Code

STEEL STRUCTURES PAINTING COUNCIL (SSPC)

SSPC SP 6	(1994) Commercial Blast Cleaning

UNDERWRITERS LABORATORIES (UL)

UL-06	(1994; Supple; Rev thru March 1996) Gas and Oil Equipment Directory

1.2 GENERAL REQUIREMENTS

1.2.1 Welding

Piping shall be welded in accordance with qualified procedures using performance qualified welders and welding operators. Procedures and welders shall be qualified in accordance with ASME BPV IX. Welding procedures qualified by others, and welders and welding operators qualified by another employer may be accepted as permitted by ASME B31.1. The Contracting Officer shall be notified at least 24 hours in advance of tests and the tests shall be performed at the work site if practicable. The Contracting Officer shall be furnished with a copy of qualified procedures and a list of names and identification symbols of qualified welders and welding operators. The welder or welding operator shall apply his assigned symbol near each weld he makes as a permanent record.

1.2.2 Jointing Thermoplastic

Piping shall be jointed by performance qualified joiners using qualified procedures in accordance with AGA-01. Plastic Pipe Manual for Gas Service. The Contracting Officer shall be furnished with a copy of qualified procedures and list of and identification symbols of qualified joiners.

1.2.3 Standard Products

Materials and equipment shall be the standard products of a manufacturer regularly engaged in the manufacture of the products and shall essentially duplicate items that have been in satisfactory use for at least 2 years prior to bid opening. Asbestos or products containing asbestos shall not be used. Manufacturer's descriptive data and installation instructions shall be submitted for approval for compression-type mechanical joints used in joining dissimilar materials and for insulating joints. Valves, flanges and fittings shall be marked in accordance with MSS SP-25.

1.2.4 Verification of Dimensions

The Contractor shall become familiar with all details of the work, verify all dimensions in the field, and shall advise the Contracting Officer of any discrepancy before performing the work.

1.3 SUBMITTALS

Government approval is required for submittals with a "GA" designation; submittals having an "FIO" designation are for information only. The following shall be submitted in accordance with Section 01330 SUBMITTAL PROCEDURES:

SD-01 Data

Qualifications; FIO.

Qualified procedures and a list of names and identification symbols of qualified welders and welding operators.

SD-04 Drawings

Gas Piping System; FIO.

Drawings showing location, size and all branches of pipeline; location of all required shutoff valves; and instructions necessary for the installation of connectors and supports including manufacuters data for pipe, fittings, valves, and accessories.

PART 2 PRODUCTS

2.1 PIPE AND FITTINGS

2.1.1 Steel Pipe, Joints, and Fittings

Steel pipe shall conform to ASME B36.10M. Malleable-iron threaded fittings shall conform to ASME B16.3. Steel pipe flanges and flanged fittings including bolts, nuts, and bolt pattern shall be in accordance with ASME B16.5. Wrought steel buttwelding fittings shall conform to ASME B16.9. Socket welding and threaded forged steel fittings shall conform to ASME B16.11.

2.1.2 Sealants for Steel Pipe Threaded Joints

Joint sealing compound shall be listed in UL-06, Class 20 or less. Tetrafluoroethylene tape shall conform to UL-06.

2.1.3 Identification

Pipe flow markings and metal tags shall be provided as required.

2.1.4 Flange Gaskets

Gaskets shall be nonasbestos compressed material in accordance with ASME B16.21, 1/16 inch thickness, full face or self-centering flat ring type. The gaskets shall contain aramid fibers bonded with styrene butadiene rubber (SBR) or nitrile butadiene rubber (NBR) suitable for a maximum 600 degree F service. NBR binder shall be used for hydrocarbon service.

2.1.5 Pipe Threads

Pipe threads shall conform to ASME B1.20.1.

2.1.6 Escutcheons

Escutcheons shall be chromium-plated steel or chromium-plated brass, either one piece or split pattern, held in place by internal spring tension or set screw.

2.1.7 Gas Transition Fittings

Gas transition fittings shall be manufactured steel fittings approved for jointing metallic and thermoplastic pipe. Approved transition fittings are those that conform to AGA-01 requirements for transitions fittings.

2.1.8 Insulating Pipe Joints

2.1.8.1 Insulating Joint Material

Insulating joint material shall be provided between flanged or threaded metallic pipe systems where shown to control galvanic or electrical action.

2.1.8.2 Threaded Pipe Joints

Joints for threaded pipe shall be steel body nut type dielectric unions with insulating gaskets.

2.1.8.3 Flanged Pipe Joints

Joints for flanged pipe shall consist of full face sandwich-type flange insulating gasket of the dielectric type, insulating sleeves for flange bolts, and insulating washers for flange nuts.

2.1.9 Flexible Connectors

Flexible connectors for connecting gas utilization equipment to building gas piping shall conform to ANSI Z21.45.

2.2 VALVES

Valves shall be suitable for shutoff or isolation service and shall conform to the following:

2.2.1 Valves 2 Inches and Smaller

Valves 2 inches and smaller shall conform to ASME B16.33 and shall be of materials and manufacture compatible with system materials used.

2.2.2 Valves 2-1/2 Inches and Larger

Valves 2-1/2 inches and larger shall be carbon steel conforming to API Spec 6D, Class 150.

2.3 PIPE HANGERS AND SUPPORTS

Pipe hangers and supports shall conform to MSS SP-58 and MSS SP-69.

2.4 METERS, REGULATORS AND SHUTOFF VALVES

Meters, regulators and shutoff valves shall be as specified in Section 02685 GAS DISTRIBUTION SYSTEM.

PART 3 EXECUTION

3.1 GAS PIPING SYSTEM

Gas piping system shall be from the point of delivery, defined as the outlet of the meter set assembly specified in Section 02685 GAS DISTRIBUTION SYSTEM, to the connections to each gas utilization device.

3.1.1 Protection of Materials and Components

Pipe and tube openings shall be closed with caps or plugs during installation. Equipment shall be protected from dirt, water, and chemical

or mechanical damage. At the completion of all work, the entire system shall be thoroughly cleaned.

3.1.2 Workmanship and Defects

Piping, tubing and fittings shall be clear and free of cutting burrs and defects in structure or threading and shall be thoroughly brushed and chip-and scale-blown. Defects in piping, tubing or fittings shall not be repaired. When defective piping, tubing, or fittings are located in a system, the defective material shall be replaced.

3.2 PROTECTIVE COVERING

3.2.1 Aboveground Metallic Piping Systems

3.2.1.1 Ferrous Surfaces

Shop primed surfaces shall be touched up with ferrous metal primer. Surfaces that have not been shop primed shall be solvent cleaned. Surfaces that contain loose rust, loose mill scale and other foreign substances shall be mechanically cleaned by power wire brushing [or commercial sand blasted conforming to SSPC SP 6] and primed with ferrous metal primer. Primed surface shall be finished with two coats of exterior oil paint.

3.2.1.2 Nonferrous Surfaces

Except for aluminum alloy pipe, nonferrous surfaces shall not be painted. Surfaces of aluminum alloy pipe and fittings shall be painted to protect against external corrosion where they contact masonry, plaster, insulation, or are subject to repeated wettings by such liquids as water, detergents or sewage. The surfaces shall be solvent-cleaned and treated with vinyl type wash coat. A first coat of aluminum paint and a second coat of alkyd gloss enamel or silicone alkyd copolymer enamel shall be applied.

3.3 INSTALLATION

Installation of the gas system shall be in conformance with the manufacturer's recommendations and applicable provisions of NFPA 54, AGA-01, and as indicated. Pipe cutting shall be done without damage to the pipe. Unless otherwise authorized, cutting shall be done by an approved type of mechanical cutter. Wheel cutters shall be used where practicable. On steel pipe 6 inches and larger, an approved gas cutting and beveling machine may be used. Cutting of thermoplastic and fiberglass pipe shall be in accordance with AGA-01.

3.3.1 Metallic Piping Installation

Changes in direction of piping shall be made with fittings only; mitering or notching pipe to form elbows and tees or other similar type construction will not be permitted. Branch connection may be made with either tees or forged branch outlet fittings. Branch outlet fittings shall be forged, flared for improvement of flow where attached to the run, and reinforced against external strains.

3.3.2 Connections Between Metallic and Plastic Piping

Connections shall be made only outside, underground, and with approved transition fittings.

3.3.3 Concealed Piping in Buildings

When installing piping which is to be concealed, unions, tubing fittings, running threads, right- and left-hand couplings, bushings, and swing joints made by combinations of fittings shall not be used.

3.3.3.1 Piping in Partitions

Concealed piping shall be located in hollow rather than solid partitions. Tubing passing through walls or partitions shall be protected against physical damage.

3.3.4 Aboveground Piping

Aboveground piping shall be run as straight as practicable along the alignment indicated and with a minimum of joints. Piping shall be separately supported. Exposed horizontal piping shall not be installed farther than 6 inches from nearest parallel wall in laundry areas where clothes hanging could be attempted.

3.3.5 Final Gas Connections

Unless otherwise specified herein, final connections shall be made with rigid metallic pipe and fittings. Flexible connectors shall only be used for final connections to gas unit heater. In addition to cautions listed in instructions required by ANSI standards for flexible connectors, insure that flexible connectors do not pass through equipment cabinet. Provide accessible gas shutoff valve and coupling for each gas equipment item.

3.4 PIPE JOINTS

Pipe joints shall be designed and installed to effectively sustain the longitudinal pull-out forces caused by contraction of the piping or superimposed loads.

3.4.1 Threaded Metallic Joints

Threaded joints in metallic pipe shall have tapered threads evenly cut and shall be made with UL approved graphite joint sealing compound for gas service or tetrafluoroethylene tape applied to the male threads only. Threaded joints up to 1-1/2 inches in diameter may be made with approved tetrafluoroethylene tape. Threaded joints up to 2 inches in diameter may be made with approved joint sealing compound. After cutting and before threading, pipe shall be reamed and burrs shall be removed. Caulking of threaded joints to stop or prevent leaks shall not be permitted.

3.4.2 Welded Metallic Joints

Beveling, alignment, heat treatment, and inspection of welds shall conform to ASME B31.2. Weld defects shall be removed and repairs made to the weld, or the weld joints shall be entirely removed and rewelded. After filler metal has been removed from its original package, it shall be protected or stored so that its characteristics or welding properties are not affected adversely. Electrodes that have been wetted or have lost any of their coating shall not be used.

3.4.3 Joining Thermoplastic or Fiberglass to Metallic Piping

When compression type mechanical joints are used, the gasket material in the fittings shall be compatible with the plastic piping and with the gas in the system. An internal tubular rigid stiffener shall be used in conjunction with the fitting, and the stiffener shall be flush with end of the pipe and shall extend at least to the outside end of the compression fitting when installed. The stiffener shall be free of rough or sharp edges and shall not be a force fit in the plastic. A split tubular stiffener shall not be used.

3.5 PIPE SLEEVES

Pipes passing through masonry walls shall be provided with pipe sleeves fitted into place at the time of construction. Sleeves shall not be installed in structural members except where indicated or approved. Each

sleeve shall extend through its respective wall and shall be cut flush with each surface. Unless otherwise indicated, sleeves shall be large enough to provide a minimum clearance of 1/4 inch all around the pipe. Sleeves in bearing walls shall be steel pipe. For penetrations of fire walls or fire partitions the annular space between the pipe and sleeve shall be sealed with firestopping material and sealant that meet the requirement of Section 07270 FIRESTOPPING.

3.6 FIRE SEAL

Penetrations of fire rated partitions, walls and floors shall be in accordance with Section 07270 FIRESTOPPING.

3.7 ESCUTCHEONS

Escutcheons shall be provided for all finished surfaces where gas piping passes through walls except in the mechanical room.

3.8 SPECIAL REQUIREMENTS

Drips, grading of the lines, freeze protection, and branch outlet locations shall be as shown and shall conform to the requirements of NFPA 54.

3.9 BUILDING STRUCTURE

Building structure shall not be weakened by the installation of any gas piping. Beams or joists shall not be cut or notched.

3.10 PIPING SYSTEM SUPPORTS

Gas piping systems in buildings shall be supported with pipe hooks, metal pipe straps, bands or hangers suitable for the size of piping or tubing. Gas piping system shall not be supported by other piping. Spacing of supports in gas piping installations shall conform to the requirements of NFPA 54. The selection and application of supports in gas piping and tubing installations shall conform to the requirements of MSS SP-69. In the support of multiple pipe runs on a common base member, a clip or clamp shall be used where each pipe crosses the base support member. Spacing of the base support members shall not exceed the hanger and support spacing required for any of the individual pipes in the multiple pipe run. The clips or clamps shall be rigidly connected to the common base member. A clearance of 1/8 inch shall be provided between the pipe and clip or clamp for all piping which may be subjected to thermal expansion.

3.11 ELECTRICAL BONDING AND GROUNDING

A gas piping system within a building shall be electrically continuous and bonded to a grounding electrode as required by NFPA 70.

3.12 SHUTOFF VALVE

Main gas shutoff valve controlling the gas piping system shall be easily accessible for operation and shall be installed as indicated, protected from physical damage, and marked with a metal tag to clearly identify the piping system controlled.

3.13 TESTING

Before any section of a gas piping system is put into service, it shall be carefully tested to assure that it is gastight. Prior to testing, the system shall be blown out, cleaned and cleared of all foreign material. Each joint shall be tested by means of an approved gas detector, soap and water, or an equivalent nonflammable solution. Testing shall be completed before any work is covered, enclosed, or concealed. All testing of piping systems shall be done with due regard for the safety of employees and the public during the test. Bulkheads, anchorage and bracing suitably designed

to resist test pressures shall be installed if necessary. Oxygen shall not be used as a testing medium.

3.13.1 Pressure Tests

Before appliances are connected, piping systems shall be filled with air or an inert gas and shall withstand a minimum pressure of 3 pounds gauge for a period of not less than 10 minutes as specified in NFPA 54 without showing any drop in pressure. Oxygen shall not be used. Pressure shall be measured with a mercury manometer, slope gauge, or an equivalent device so calibrated as to be read in increments of not greater than 0.1 pound. The source of pressure shall be isolated before the pressure tests are made.

3.13.2 Test With Gas

Before turning gas under pressure into any piping, all openings from which gas can escape shall be closed. Immediately after turning on the gas, the piping system shall be checked for leakage by using a laboratory-certified gas meter, an appliance orifice, a manometer, or equivalent device. All testing shall conform to the requirements of NFPA 54. If leakage is recorded, the gas supply shall be shut off, the leak shall be repaired, and the tests repeated until all leaks have been stopped.

3.13.3 Purging

After testing is completed, and before connecting any appliances, all gas piping shall be fully purged. Piping shall not be purged into the combustion chamber of an appliance. The open end of piping systems being purged shall not discharge into confined spaces or areas where there are ignition sources unless the safety precautions recommended in NFPA 54 are followed.

3.13.4 Labor, Materials and Equipment

All labor, materials and equipment necessary for conducting the testing and purging shall be furnished by the Contractor.

-- End of Section --

SECTION 15565

HEATING SYSTEM; GAS-FIRED HEATERS

PART 1 GENERAL

1.1 REFERENCES

The publications listed below form a part of this specification to the extent referenced. The publications are referred to in the text by basic designation only.

AMERICAN GAS ASSOCIATION LABORATORIES (AGAL)

AGAL-01	(1995; Supple Dec 95) Directory of Certified Appliances and Accessories

AMERICAN NATIONAL STANDARDS INSTITUTE (ANSI)

ANSI Z21.66	(1988; Z21.66a; Z21.66b) Automatic Vent Damper Devices for Use with Gas-Fired Appliances
ANSI Z83.8	(1990; Z83.8a; Z83.8b) Gas Unit Heaters

NATIONAL ELECTRICAL MANUFACTURERS ASSOCIATION (NEMA)

NEMA MG 1	(1993; Rev 1) Motors and Generators

NATIONAL FIRE PROTECTION ASSOCIATION (NFPA)

NFPA 54	(1992) National Fuel Gas Code

UNDERWRITERS LABORATORIES (UL)

UL-06	(1995) Gas and Oil Equipment Directory

1.2 SUBMITTALS

Government approval is required for submittals with a "GA" designation; submittals having an "FIO" designation are for information only. The following shall be submitted in accordance with Section 01330 SUBMITTAL PROCEDURES:

SD-04 Drawings

Heating System; FIO.

Detail drawings consisting of illustrations, schedules, performance charts, instructions, brochures, diagrams, and other information to illustrate the requirements and operation of the system. Detail drawings for space heating equipment, controls, associated equipment, and for piping and wiring. Drawings shall show proposed layout and anchorage of equipment and appurtenances, and equipment relationship to other parts of the work including clearances for maintenance and operation.

SD-06 Instructions

Heating System; FIO.

Six complete copies of operating instructions outlining the step-by-step procedures required for system startup, operation and shutdown. The instructions shall include the manufacturer's name, model number, service manual, parts list, and brief description of all equipment and basic

operating features. Six complete copies of maintenance instructions listing routine maintenance, possible breakdowns, repairs and troubleshooting guide. The instructions shall include simplified piping, wiring, and control diagrams for the system as installed.

SD-09 Reports

Testing, Adjusting, and Balancing; FIO.

Test reports shall be submitted in booklet form showing all field tests performed to adjust each component and all field tests performed to prove compliance with the specified performance criteria, upon completion and testing of the installed system. Each test report shall indicate the final position of controls.

1.3 GENERAL REQUIREMENTS

1.3.1 Nameplates

Each major component of equipment shall have the manufacturer's name, address, type or style, model or serial number, and catalog number on a plate secured to the equipment.

1.3.2 Equipment Guards

Belts, pulleys, chains, gears, couplings, projecting setscrews, keys, and other rotating parts so located that any person may come in close proximity thereto shall be completely enclosed or guarded. High-temperature equipment and piping so located as to endanger personnel or create a fire hazard shall be guarded or covered with insulation of type specified for service.

1.3.3 Verification of Dimensions

The Contractor shall become thoroughly familiar with all details of the work, verify all dimensions in the field, and shall advise the Contracting Officer of any discrepancy before performing any work.

1.4 DELIVERY AND STORAGE

All equipment delivered and placed in storage shall be stored with protection from weather, humidity and temperature variations, dirt and dust, or other contaminants.

PART 2 PRODUCTS

2.1 STANDARD PRODUCTS

Material and equipment shall be standard products of a manufacturer regularly engaged in manufacturing of the products. Equipment shall essentially duplicate equipment that has been in satisfactory use at least 2 years prior to bid opening.

2.2 ELECTRICAL WORK

Electrical motor driven equipment shall be provided complete with motors, motor starters, and controls. Motors shall conform to NEMA MG 1. Electrical equipment and wiring shall be in accordance with Section 16415 ELECTRICAL WORK, INTERIOR. Electrical characteristics shall be as specified or indicated. Motor starters shall be provided complete with thermal overload protection and other appurtenances necessary for the motor control specified. Each motor shall be of sufficient size to drive the equipment at the specified capacity without exceeding the nameplate rating of the motor. Manual or automatic control and protective or signal devices required for the operation specified and any control wiring required for controls and devices specified, but not shown, shall be provided.

2.3 HEATERS

Heaters shall be equipped for and adjusted to burn natural petroleum gas. Each heater shall be provided with a gas pressure regulator that will satisfactorily limit the main gas burner supply pressure. Heaters shall have an intermittent or interrupted electrically ignited pilot or a direct electric ignition system. Safety controls shall conform to the ANSI standard specified for each heater. Mounting brackets and hardware shall be furnished by the heater manufacturer and shall be factory finished to match the supported equipment.

2.3.1 Unit Heaters

Heaters shall be separated combustion conforming to requirements of ANSI Z83.8. Heat exchangers shall be aluminum clad steel. Air discharge section shall be equipped with adjustable horizontal louvers. Heater fan motors shall operate at a speed not in excess of 1,600 rpm for units with capacities above 60,000 Btuh. Fan shafts shall be either directly connected to the driving motor. Heaters shall be power-vented type, suitable for sidewall vent discharge and single-wall-thickness vent piping. Heaters shall have automatic ignition. Heaters shall employ direct outside air for combustion air through a concentric combustion air/flue pipe arrangement as shown. Heaters shall have minimum steady state efficiencies of 80 percent at maximum rated capacity and 75 percent at minimum rated capacity that is provided and allowed by the controls. Heaters shall be provided with a 24-volt control transformer and space thermostat which controls both unit's fan and burner.

2.4 THERMOSTATS

Thermostats shall be the adjustable electric or electronic type. Control wiring required to complete the space temperature control system shall be included. Thermostats shall have a 3 degree F differential and a set point range of 40 to 75 degrees F. Thermostats shall be the two stage type.

2.5 VENT PIPING

Vent piping shall be minimum 24-gauge galvanized steel conforming to the requirements of NFPA 54. The venting and combustion air arrangement and components shall be Certified by AGAL.

2.6 FACTORY FINISHES

Equipment and component items, when fabricated from ferrous metal, shall be factory finished with the manufacturer's standard finish.

PART 3 EXECUTION

3.1 INSTALLATION

Equipment shall be installed as indicated and in accordance with the recommendations of the equipment manufacturer and the listing agency, except as otherwise specified.

3.1.1 Heating Equipment

Heaters shall be installed with clearance to combustibles complying with minimum distances as determined by AGAL-01, UL-06 and as indicated on each heater approval and listing plate. Heaters shall be independently supported from the building structure as indicated and shall not rely on support from suspended ceiling systems.

3.1.2 Vents

Vent dampers, piping and structural penetrations shall be located as indicated. Vent damper installation shall conform to ANSI Z21.66. Vent pipes shall extend through the roof or an outside wall and shall terminate, in compliance with NFPA 54. Vents passing through waterproof membranes shall be provided with the necessary flashings to obtain waterproof installations.

3.1.3 Gas Piping

Gas piping shall be connected as indicated and shall comply with the applicable requirements at Section 15488 GAS PIPING SYSTEMS.

3.2 TESTING, ADJUSTING, AND BALANCING

Testing, adjusting, and balancing shall be as specified in Section 15990 TESTING, ADJUSTING, AND BALANCING OF HVAC SYSTEMS.

-- End of Section --

SECTION 15653

AIR-CONDITIONING SYSTEM (UNITARY TYPE)

PART 1 GENERAL

1.1 REFERENCES

The publications listed below form a part of this specification to the extent referenced. The publications are referred to in the text by basic designation only.

AIR CONDITIONING AND REFRIGERATION INSTITUTE (ARI)

ARI 210/240	(1989) Unitary Air-Conditioning and Air-Source Heat Pump Equipment
ARI 460	(1994) Remote Mechanical-Draft Air-Cooled Refrigerant Condensers
ARI 700	(1993) Specifications for Fluorocarbon and Other Refrigerants
ARI 710	(1986) Liquid-Line Driers

AIR DIFFUSION COUNCIL (ADC)

ADC 1062:GRD	(1984) Test Codes for Grilles, Registers and Diffusers

AMERICAN SOCIETY FOR TESTING AND MATERIALS (ASTM)

ASTM A 53	(1995a) Pipe, Steel, Black and Hot-Dipped, Zinc-Coated Welded and Seamless
ASTM A 307	(1994) Carbon Steel Bolts and Studs, 60 000 PSI Tensile Strength
ASTM A 653	(1995) Steel Sheet, Zinc-Coated (Galvanized) or Zinc-Iron Alloy-Coated (Galvannealed) by the Hot-Dip Process
ASTM B 117	(1994) Operating Salt Spray (Fog) Testing Apparatus
ASTM C 534	(1994) Preformed Flexible Elastomeric Cellular Thermal Insulation in Sheet and Tubular Form
ASTM C 916	(1985; R 1990) Adhesives for Duct Thermal Insulation
ASTM C 1071	(1991) Thermal and Acoustical Insulation (Glass Fiber, Duct Lining Material)
ASTM D 520	(1984; R 1989) Zinc Dust Pigment
ASTM E 84	(1994) Surface Burning Characteristics of Building Materials
ASTM E 437	(1992) Industrial Wire Cloth and Screens (Square Opening Series)
ASTM F 104	(1993) Nonmetallic Gasket Materials

AMERICAN SOCIETY OF HEATING, REFRIGERATING AND AIR-CONDITIONING ENGINEERS (ASHRAE)

ASHRAE 15	(1994) Safety Code for Mechanical Refrigeration
ASHRAE 34	(1994) Number Designation and Safety Classification of Refrigerants
ASHRAE 52.1	(1992) Gravimetric and Dust-Spot Procedures for Testing Air-Cleaning Devices Used in General Ventilation for Removing Particulate Matter

AMERICAN SOCIETY OF MECHANICAL ENGINEERS (ASME)

ASME B31.5	(1992; B31.5a) Refrigeration Piping

AMERICAN WELDING SOCIETY (AWS)

AWS-01	(1991) Brazing Handbook
AWS A5.8	(1992) Filler Metals for Brazing and Braze Welding

MANUFACTURERS STANDARDIZATION SOCIETY OF THE VALVE AND FITTINGS INDUSTRY (MSS)

MSS SP-58	(1993) Pipe Hangers and Supports - Materials, Design and Manufacture
MSS SP-69	(1991) Pipe Hangers and Supports - Selection and Application

NATIONAL ELECTRICAL MANUFACTURERS ASSOCIATION (NEMA)

NEMA ICS 6	(1993) Enclosures for Industrial Control and Systems
NEMA MG 1	(1993; Rev 1-1993) Motors and Generators
NEMA MG 2	(1989; Rev 1) Safety Standard for Construction and Guide for Selection, Installation, and Use of Electric Motors and Generators

NATIONAL FIRE PROTECTION ASSOCIATION (NFPA)

NFPA 54	(1992) National Fuel Gas Code
NFPA 70	(1996) National Electrical Code
NFPA 90A	(1993) Installation of Air Conditioning and Ventilating Systems

SHEET METAL AND AIR CONDITIONING CONTRACTORS NATIONAL ASSOCIATION (SMACNA)

SMACNA-05	(1992) Fire, Smoke and Radiation Damper Installation Guide for HVAC Systems
SMACNA-06	(1995) HVAC Duct Construction Standards - Metal and Flexible

UNDERWRITERS LABORATORIES (UL)

UL-01	(1996; Supple) Building Materials Directory
UL-05	(1996; Supple) Fire Resistance Directory
UL 181	(1996; Rev Oct 1996) Factory-Made Air Ducts and Air Connectors
UL 214	(1993) Tests for Flame-Propagation of Fabrics and Films
UL 555	(1995) Fire Dampers
UL 723	(1996) Test for Surface Burning Characteristics of Building Materials
UL 900	(1994) Test Performance of Air Filter Units
UL 1995	(1995) Heating and Cooling Equipment

1.2 SUBMITTALS

Government approval is required for submittals with a "GA" designation; submittals having an "FIO" designation are for information only. The following shall be submitted in accordance with Section 01330 SUBMITTAL PROCEDURES:

SD-01 Data

Air-Conditioning System; FIO.

Manufacturer's standard catalog data, prior to the purchase or installation of a particular component, shall be highlighted to show brand name, model number, size, options, performance charts and curves, etc. in sufficient detail to demonstrate compliance with contract requirements. Data shall be submitted for each specified component. Data shall include manufacturer's recommended installation instructions and procedures. If vibration isolation is specified for a unit, vibration isolator literature shall be included containing catalog cuts and certification that the isolation characteristics of the isolators provided meet the manufacturer's recommendations.

SD-04 Drawings

Air-Conditioning System; GA.

Drawings shall provide adequate detail to demonstrate compliance with contract requirements. Drawings shall consist of:

(1) Equipment layouts which identify assembly and installation details.

(2) Piping layouts which identify valves and fittings.

(3) Plans and elevations which identify clearances required for maintenance and operation.

(4) Wiring diagrams which identify each component individually and interconnected or interlocked relationships between components.

(5) Details, if piping and equipment are to be supported other than as indicated, which include loadings and type of frames, brackets, stanchions, or other supports.

(6) Automatic temperature control diagrams and control sequences.

(7) Installation details which includes the amount of factory set superheat and corresponding refrigerant pressure/temperature.

SD-07 Schedules

Tests; FIO.

A letter, at least 10 working days in advance of each tests, advising the Contracting Officer of the test. Individual letters shall be submitted for the performance tests. Each letter shall identify the date, time, and location for each test.

Verification of Dimensions; FIO.

A letter, at least 2 weeks prior to beginning construction, including the date the site was visited, conformation of existing conditions, and any discrepancies found.

SD-09 Reports

Tests; GA.

Six copies of each test containing the information described below in bound 8-1/2 by 11 inch booklets. Individual reports shall be submitted for the condenser water system, refrigerant system, ductwork leak tests, and the cooling tower tests.

(1) The date the tests were performed.

(2) A list of equipment used, with calibration certifications.

(3) Initial test summaries.

(4) Repairs/adjustments performed.

(5) Final test results.

System Performance Tests; GA.

Six copies of the report shall be provided in bound 8-1/2 by 11 inch booklets. The report shall document compliance with the specified performance criteria upon completion and testing of the system. The report shall indicate the number of days covered by the tests and any conclusions as to the adequacy of the system. The report shall also include the following information and shall be taken at least three different times at outside dry-bulb temperatures that are at least 5 degrees F apart:

(1) Date and outside weather conditions.

(2) The load on the system based on the following:
(a) The refrigerant used in the system.
(b) Condensing temperature and pressure.
(c) Suction temperature and pressure.
(d) Ambient, condensing and coolant temperatures
(e) Running current, voltage and proper phase sequence for each phase of all motors.

(3) The actual on-site setting of operating and safety controls.

(4) Thermostatic expansion valve superheat - value as determined by field test

(5) Subcooling

(6) High and low refrigerant temperature switch set-points

(7) Low oil pressure switch set-point

(8) Defrost system timer and thermostat set-points

(9) Moisture content

(10) Capacity control set-points

(11) Field data and adjustments which affect unit performance and energy consumption.

(12) Field adjustments and settings which were not permanently marked as an integral part of a device.

SD-13 Certificates

Air-Conditioning System; FIO.

Where the system, components, or equipment are specified to comply with requirements of ARI, ASHRAE, ASME, or UL, proof of such compliance shall be provided. The label or listing of the specified agency shall be acceptable evidence. In lieu of the label or listing, a written certificate from an approved, nationally recognized testing organization equipped to perform such services, stating that the items have been tested and conform to the requirements and testing methods of the specified agency may be submitted. When performance requirements of this project's drawings and specifications vary from standard ARI rating conditions, computer printouts, catalog, or other application data certified by ARI or a nationally recognized laboratory as described above shall be included. If ARI does not have a current certification program that encompasses such application data, the manufacturer may self certify that his application data complies with project performance requirements in accordance with the specified test standards.

Service Organizations; FIO.

A certified list of qualified permanent service organizations for support of the equipment which includes their addresses and qualifications. The service organizations shall be reasonably convenient to the equipment installation and be able to render satisfactory service to the equipment on a regular and emergency basis during the warranty period of the contract.

SD-19 Operation and Maintenance Manuals

Operation Manual; FIO.

Six complete copies of an operation manual in bound 8-1/2 by 11 inch booklets listing step-by-step procedures required for system startup, operation, and shutdown. The booklets shall include the manufacturer's name, model number, and parts list. The manuals shall include the manufacturer's name, model number, service manual, and a brief description of all equipment and their basic operating features.

Maintenance Manual; FIO.

Six complete copies of maintenance manual in bound 8-1/2 by 11 inch booklets listing routine maintenance procedures, possible breakdowns and repairs, and a trouble shooting guide. The manuals shall include piping

and equipment layouts and simplified wiring and control diagrams of the system as installed.

1.3 DELIVERY, STORAGE, AND HANDLING

Stored items shall be protected from the weather and contamination. Proper protection and care of all material before, during, and after installation shall be the Contractor's responsibility. Any materials found to be damaged shall be replaced at the Contractor's expense. During installation, piping and similar openings shall be capped to keep out dirt and other foreign matter.

1.4 PROJECT/SITE CONDITIONS

1.4.1 Verification of Dimensions

The Contractor shall become familiar with all details of the work, verify dimensions in the field, and advise the Contracting Officer of any discrepancy before performing any work.

1.4.2 Drawings

Because of the small scale of the drawings, it is not possible to indicate all offsets, fittings, and accessories that may be required. The Contractor shall carefully investigate the plumbing, fire protection, electrical, structural and finish conditions that would affect the work to be performed and arrange such work accordingly, furnishing required offsets, fittings, and accessories to meet such conditions. Equipment, ductwork, and piping arrangements shall fit into space allotted and allow adequate acceptable clearances for installation, replacement, entry, servicing, and maintenance.

PART 2 PRODUCTS

2.1 STANDARD PRODUCTS

Materials and equipment shall be standard products of a manufacturer regularly engaged in the manufacturing of such products, which are of a similar material, design and workmanship. The standard products shall have been in satisfactory commercial or industrial use for 2 years prior to bid opening. The 2 year use shall include applications of equipment and materials under similar circumstances and of similar size. The 2 years experience shall be satisfactorily completed by a product which has been sold or is offered for sale on the commercial market through advertisements, manufacturer's catalogs, or brochures. Products having less than a 2 year field service record shall be acceptable if a certified record of satisfactory field operation, for not less than 6000 hours exclusive of the manufacturer's factory tests, can be shown. Products shall be supported by a service organization. System components shall be environmentally suitable for the indicated locations.

2.2 NAMEPLATES

Major equipment including compressors, condensers, receivers, heat exchanges, fans, cooling towers, pumps and motors shall have the manufacturer's name, address, type or style, model or serial number, and catalog number on a plate secured to the item of equipment. Plates shall be durable and legible throughout equipment life and made of anodized aluminum or stainless steel. Plates shall be fixed in prominent locations with nonferrous screws or bolts.

2.3 ELECTRICAL WORK

Electrical equipment, motors, motor efficiencies, and wiring shall be in accordance with Section 16415 ELECTRICAL WORK, INTERIOR. Electrical motor driven equipment specified shall be provided complete with motors, motor

starters, and controls. Electrical characteristics shall be as shown, and unless otherwise indicated, all motors of 1 horsepower and above with open, dripproof, totally enclosed, or explosion proof fan cooled enclosures, shall be high efficiency type. Field wiring shall be in accordance with manufacturer's instructions. Each motor shall conform to NEMA MG 1 and NEMA MG 2 and be of sufficient size to drive the equipment at the specified capacity without exceeding the nameplate rating of the motor. Motors shall be continuous duty with the enclosure specified. Motor starters shall be provided complete with thermal overload protection and other appurtenances necessary for the motor control indicated. Motors shall be furnished with a magnetic across-the-line or reduced voltage type starter as required by the manufacturer. Motor duty requirements shall allow for maximum frequency start-stop operation and minimum encountered interval between start and stop. Motors shall be sized for the applicable loads. Motor torque shall be capable of accelerating the connected load within 20 seconds with 80 percent of the rated voltage maintained at motor terminals during one starting period. Motor bearings shall be fitted with grease supply fittings and grease relief to outside of enclosure. Manual or automatic control and protective or signal devices required for the operation specified and any control wiring required for controls and devices specified, but not shown, shall be provided.

2.4 MISCELLANEOUS MATERIALS

2.4.1 Gaskets

Gaskets shall conform to ASTM F 104 - classification for compressed sheet with nitrile binder and acrylic fibers for maximum 700 degrees F service.

2.4.2 Bolts and Nuts

Bolts and nuts, except as required for piping applications, shall be in accordance with ASTM A 307. The bolt head shall be marked to identify the manufacturer and the standard with which the bolt complies in accordance with ASTM A 307.

2.4.3 Pipe Hangers, Inserts, and Supports

Pipe hangers, inserts, and supports shall conform to MSS SP-58 and MSS SP-69.

2.4.4 Escutcheons

Escutcheons shall be chromium-plated iron or chromium-plated brass, either one piece or split pattern, held in place by internal spring tension or set screws.

2.4.5 Unicellular Plastic Foam

Unicellular plastic foam shall be in accordance with ASTM C 534, Form T, except that D-Factor shall not exceed 0.28 at 75 degrees F mean temperature.

2.4.6 Bird Screen

Screen shall be in accordance with ASTM E 437, Type 1, Class 1, 2 by 2 mesh, 0.063 inch diameter aluminum wire or 0.031 inch diameter stainless steel wire.

2.5 UNITARY EQUIPMENT, SPLIT SYSTEM

Unit shall be an air-cooled split system which employs a remote condensing unit, a separate indoor unit, and interconnecting refrigerant piping. Unit shall be the air-conditioning type conforming to applicable Underwriters Laboratories (UL) standards including UL 1995. Unit shall be rated in accordance with ARI 210/240. Unit shall be provided with necessary fans,

air filters, mixing boxes, supplemental heat, and cabinet construction as specified in paragraph "System Components". The remote unit shall be as specified in paragraph REMOTE CONDENSER OR CONDENSING UNIT. Evaporator or supply fans shall be double-width, double inlet, forward curved, backward inclined, or airfoil blade, centrifugal scroll type. Condenser or outdoor fans shall be the manufacturer's standard for the unit specified and may be either propeller or centrifugal scroll type. Fan and condenser motors shall have dripproof enclosures.

2.5.1 Air-to-Refrigerant Coil

Coils shall have nonferrous tubes of 3/8 inch minimum diameter with copper or aluminum fins that are mechanically bonded or soldered to the tubes. Casing shall be galvanized steel or aluminum. Contact of dissimilar metals shall be avoided. Coils shall be tested in accordance with ASHRAE 15 at the factory and be suitable for the working pressure of the installed system. Each coil shall be dehydrated and sealed after testing and prior to evaluation and charging. Each unit shall be provided with a factory operating charge of refrigerant and oil or a holding charge. Unit shipped with a holding charge shall be field charged. Separate expansion devices shall be provided for each compressor circuit.

2.5.2 Refrigeration Circuit

Refrigerant-containing components shall comply with ASHRAE 15 and be factory tested, cleaned, dehydrated, charged, and sealed. Refrigerant charging valves and connections, and pumpdown valves shall be provided for each circuit. Refrigerant flow control devices shall be an adjustable superheat thermostatic expansion valve with external equalizer matched to coil.

2.5.3 Unit Controls

Unit shall be internally prewired with a 24 volt control circuit powered by an internal transformer. Terminal blocks shall be provided for power wiring and external control wiring. Unit shall have cutoffs for high and low pressure, and low oil pressure for compressors with positive displacement oil pumps, supply fan failure, and safety interlocks on all service panels. Head pressure controls shall sustain unit operation with ambient temperature of 40 degrees F. Adjustable-cycle timers shall prevent short-cycling. Unit shall be internally protected by fuses or a circuit breaker in accordance with UL 1995.

2.6 EQUIPMENT EFFICIENCY

Unit shall have an efficiency as indicated on the drawings.

2.7 REMOTE CONDENSER OR CONDENSING UNIT

Each remote condenser coil shall be fitted with a manual isolation valve and an access valve on the coil side. Saturated refrigerant condensing temperature shall not exceed 120 degrees F at 95 degrees F ambient. Unit shall be provided with low ambient condenser controls to ensure proper operation in an ambient temperature of 40 degrees F. Fan and cabinet construction shall be provided as specified in paragraph "System Components". Fan and condenser motors shall have dripproof enclosures.

2.7.1 Air-Cooled Condenser

Unit shall be rated in accordance with ARI 460 and conform to the requirements of UL 1995. Unit shall be factory fabricated, tested, packaged, and self-contained. Unit shall be complete with casing, propeller or centrifugal type fans, heat rejection coils, connecting piping and wiring, and all necessary appurtenances.

2.7.1.1 Connections

Interconnecting refrigeration piping, electrical power, and control wiring between the condensing unit and the indoor unit shall be provided as required and as indicated. Electrical and refrigeration piping terminal connections between condensing unit and evaporator units shall be provided.

2.7.1.2 Head Pressure Control and Liquid Subcooling

Controls shall be set to produce a minimum of 95 degrees F saturated refrigerant condensing temperature. Unit shall be provided with a liquid subcooling circuit which shall ensure proper liquid refrigerant flow to the expansion device over the specified application range of the condenser. Unit shall be provided with manufacturer's standard liquid subcooling. Subcooling circuit shall be liquid sealed.

2.7.1.3 Condensing Coil

Coils shall have nonferrous tubes of 3/8 inch minimum diameter with copper or aluminum fins that are mechanically bonded or soldered to the tubes. Coils shall be protected with a minimum 3 mil thick phenolic or vinyl coating. Casing shall be galvanized steel or aluminum. Coils shall be protected with plastic coated steel hail guards. Contact of dissimilar metals shall be avoided. Coils shall be tested in accordance with ASHRAE 15 at the factory and be suitable for the working pressure of the installed system. Each coil shall be dehydrated and sealed after testing and prior to evaluation and charging. Each unit shall be provided with a factory operating charge of refrigerant and oil or a holding charge. Unit shipped with a holding charge shall be field charged. Separate expansion devices shall be provided for each compressor circuit.

2.7.1.4 Unit Controls

The control system shall be complete with required accessories for regulating condenser pressure by fan cycling. Unit mounted control panels or enclosures shall be constructed in accordance with applicable requirements of NFPA 70 and housed in NEMA ICS 6, Class 1 or 3A enclosures. Controls shall include control transformer, fan motor starters, time delay start-up, overload protective devices, interface with local and remote components, and intercomponent wiring to terminal block points.

2.7.2 Compressor

Compressor shall be direct drive, semi-hermetic or hermetic reciprocating, or scroll type capable of operating at partial load conditions. Compressor shall be capable of continuous operation down to the lowest step of unloading as specified. Each compressor shall start in the unloaded position. Each compressor shall be provided with vibration isolators, crankcase heater, thermal overloads, and high and low pressure safety cutoffs and protection against short cycling.

2.8 SYSTEM COMPONENTS

2.8.1 Refrigerant and Oil

Refrigerant shall be one of the fluorocarbon gases. Refrigerants shall have number designations and safety classifications in accordance with ASHRAE 34. Refrigerants shall meet the requirements of ARI 700 as a minimum. Refrigerants shall have an Ozone Depletion Potential (ODP) of less than or equal to 0.05. Contractor shall provide and install a complete charge of refrigerant for the installed system as recommended by the manufacturer. Except for factory sealed units, two complete charges of lubricating oil for each compressor crankcase shall be furnished. One charge shall be used during the system performance testing period. Following the satisfactory completion of the performance testing, the oil shall be drained and replaced with a second charge. Lubricating oil shall

be of a type and grade recommended by the manufacturer for each compressor. Where color leak indicator dye is incorporated, charge shall be in accordance with manufacturer's recommendation.

2.8.2 Fans

Fan wheel shafts shall be supported by either maintenance-accessible lubricated antifriction block-type bearings, or permanently lubricated ball bearings. Unit fans shall be selected to produce the cfm required at the fan total pressure. Motor starters, if applicable, shall be magnetic across-the-line type with a dripproof enclosure. Thermal overload protection shall be of the manual or automatic-reset type. Fan wheels or propellers shall be constructed of aluminum or galvanized steel. Centrifugal fan wheel housings shall be of galvanized steel, and both centrifugal and propeller fan casings shall be constructed of aluminum or galvanized steel. Steel elements of fans, except fan shafts, shall be hot-dipped galvanized after fabrication or fabricated of mill galvanized steel. Mill-galvanized steel surfaces and edges damaged or cut during fabrication by forming, punching, drilling, welding, or cutting shall be recoated with an approved zinc-rich compound. Fan wheels or propellers shall be statically and dynamically balanced. Direct-drive fan motors shall be of the multiple-speed variety. Propeller fans shall be direct-drive drive type with fixed pitch blades. Drive bearings shall be protected with water slingers or shields.

2.8.3 Primary/Supplemental Heating

2.8.3.1 Gas Fired Heating Section

Gas fired heat exchanger shall be constructed of aluminized steel, ceramic coated cold-rolled steel or stainless steel suitable for natural gas fuel supply. Burner shall have direct spark or hot surface ignition. Valve shall include a pressure regulator. Combustion air shall be supplied with a centrifugal combustion air blower. Safety controls shall include a flame sensor and air pressure switch. Heater section shall be mounted to eliminate noise from expansion and contraction and shall be completely accessible for service. Gas equipment shall bear the AGA label for the type of service involved. Burner shall be in accordance with NFPA 54.

2.8.4 Air Filters

Air filters shall be listed in accordance with requirements of UL 900

2.8.4.1 Disposable, Pleated Filters

Disposable pleated type filters shall be the medium efficiency type of the size required to suit the application. Filtering media shall be not less than 1 inches thick non-woven cotton and synthetic fabric media pad supported by a structural wire grid or woven wire mesh. Pad shall be enclosed in a paper board holding frame. The air flow capacity of the filter shall be based on net filter face velocity not exceeding 300 feet per minute, with initial resistance of 0.13 inches water gauge. Average efficiency shall be not less than 20 percent when tested in accordance with ASHRAE 52.1.

2.8.5 Internal Dampers

Dampers shall be parallel blade type with renewable blade seals and be integral to the unitary unit. Damper provisions shall be provided for each outside air intake. Dampers shall automatically open when the respective supply air fan is energized and close when the supply fan is de-energized.

2.8.6 Cabinet Construction

Casings for the specified unitary equipment shall be constructed of galvanized steel or aluminum sheet metal and galvanized or aluminum

structural members. Minimum thickness of single wall exterior surfaces shall be 20 gauge galvanized steel. Casing shall be fitted with lifting provisions, access panels or doors, fan vibration isolators, electrical control panel, corrosion-resistant components, structural support members, insulated condensate drip pan and drain, and internal insulation in the cold section of the casing. Where double-wall insulated construction is proposed, minimum exterior galvanized sheet metal thickness shall be 20 gauge. Provisions to permit replacement of major unit components shall be incorporated. Penetrations of cabinet surfaces, including the floor, shall be sealed. Unit shall be fitted with a drain pan which extends under all areas where water may accumulate. Drain pan shall be fabricated from Type 300 stainless steel, galvanized steel with protective coating as required, or an approved plastic material. Pan insulation shall be water impervious. Extent and effectiveness of the insulation of unit air containment surfaces shall prevent, within limits of the specified insulation, heat transfer between the unit exterior and ambient air, heat transfer between the two conditioned air streams, and condensation on surfaces. Insulation shall conform to ASTM C 1071. Paint and finishes shall comply with the requirements specified in paragraph "Factory Coating".

2.8.6.1 Indoor Cabinet

Indoor cabinets shall be suitable for the specified indoor service and enclose all unit components.

2.8.6.2 Outdoor Cabinet

Outdoor cabinets shall be suitable for outdoor service with a weathertight, insulated and corrosion-protected structure. Cabinets constructed exclusively for indoor service which have been modified for outdoor service are not acceptable.

2.9 INSULATION

2.9.1 Field Installed Insulation

Field installed insulation shall be as specified in Section 15250 THERMAL INSULATION FOR MECHANICAL SYSTEMS.

2.9.2 Factory Installed Insulation

Factory applied insulation shall be as specified for the equipment to be insulated except that refrigerant suction lines shall be insulated with unicellular plastic foam. Insulation shall comply with the fire hazard rating specified in Section 15250 THERMAL INSULATION FOR MECHANICAL SYSTEMS.

2.10 TEMPERATURE CONTROLS

Temperature controls shall be in accordance with Section 15950 HEATING, VENTILATING AND AIR CONDITIONING HVAC CONTROL SYSTEMS.

2.11 DUCTWORK COMPONENTS

2.11.1 Metal Ductwork

Every aspect of metal ductwork construction, including fittings and components, shall comply with SMACNA-06 unless otherwise specified. Elbows shall be radius type with a centerline radius of 1-1/2 times the width or diameter of the duct where space permits. Otherwise, elbows having a minimum radius equal to the width or diameter of the duct or square elbows with factory fabricated turning vanes may be used. Static pressure Class 1/2, 1, and 2 inch w.g. ductwork shall meet the requirements of Seal Class C. Sealants shall conform to fire hazard classification specified in Section 15250 THERMAL INSULATION FOR MECHANICAL SYSTEMS. Pressure sensitive tape shall not be used as a sealant. Spiral lock seam duct shall

be made with duct sealant and locked with not less than 3 equally spaced drive screws or other approved methods indicated in SMACNA-06. The sealant shall be applied to the exposed male part of the fitting collar so that the sealer will be on the inside of the joint and fully protected by the metal of the duct fitting. One brush coat of the sealant shall be applied over the outside of the joint to at least 2 inch band width covering all screw heads and joint gap. Dents in the male portion of the slip fitting collar will not be acceptable.

2.11.1.1 Transitions

Diverging air flow transitions shall be made with each side pitched out a maximum of 15 degrees, for an included angle of 30 degrees. Transitions for converging air flow shall be made with each side pitched in a maximum of 30 degrees, for an included angle of 60 degrees, or shall be as indicated. Factory-fabricated reducing fittings for systems using round duct sections when formed to the shape of the ASME short flow nozzle, need not comply with the maximum angles specified.

2.11.1.2 Insulated Nonmetallic Flexible Duct Runouts

Flexible duct runouts shall be used only where indicated. Runouts shall not exceed 7 feet in length, shall be preinsulated, factory fabricated, and comply with NFPA 90A and UL 181. Either field or factory applied vapor barrier shall be provided. Where coil induction or high velocity units are supplied with vertical air inlets, a streamlined and vaned and mitered elbow transition piece shall be provided for connection to the flexible duct or hose. The last elbow to these units, other than the vertical air inlet type, shall be a die-stamped elbow and not a flexible connector. Insulated flexible connectors may be used as runouts. The insulation material surface shall not be exposed to the air stream.

2.11.1.3 General Service Duct Connectors

A flexible duct connector approximately 6 inches in width shall be provided where sheet metal connections are made to fans or where ducts of dissimilar metals are connected. For round/oval ducts, the flexible material shall be secured by stainless steel or zinc-coated, iron clinch-type draw bands. For rectangular ducts, the flexible material locked to metal collars shall be installed using normal duct construction methods. The composite connector system shall comply with UL 214 and be classified as "flame-retarded fabrics" in UL-01.

2.11.2 Ductwork Insulation

Ductwork insulation and related materials shall conform to the requirements of Section 15250 THERMAL INSULATION FOR MECHANICAL SYSTEMS.

2.11.3 Ductwork Accessories

2.11.3.1 Duct Access Doors

Access doors shall be provided in ductwork where indicated and at all fire dampers, coils, thermostats, and other apparatus requiring service and inspection in the duct system, and unless otherwise shown, shall conform to SMACNA-06. Doors shall be minimum 15 by 18 inches, unless otherwise shown. Where duct size will not accommodate this size door, the doors shall be made as large as practicable. Doors in insulated ducts shall be the insulated type.

2.11.3.2 Fire Dampers

Fire dampers shall be 1-1/2 hour fire rated unless otherwise indicated. Fire dampers shall conform to the requirements of NFPA 90A and UL 555. Fire dampers shall be automatic operating type and shall have a dynamic rating suitable for the maximum air velocity and pressure differential to

which it will be subjected. Fire dampers shall be approved for the specific application and shall be installed according to their listing. Fire dampers shall be equipped with a steel sleeve or adequately sized frame installed in such a manner that disruption of the attached ductwork, if any, will not impair the operation of the damper. Sleeves or frames shall be equipped with perimeter mounting angles attached on both sides of the wall or floor opening. Ductwork in fire-rated floor-ceiling or roof-ceiling assembly systems with air ducts that pierce the ceiling of the assemblies shall be constructed in conformance with UL-05. Fire dampers shall be curtain type with damper blades out of the air stream. Dampers shall not reduce the duct or the air transfer opening cross-sectional area. Dampers shall be installed so that the centerline of the damper depth or thickness is located in the centerline of the wall, partition or floor slab depth or thickness. Unless otherwise indicated, the installation details given in SMACNA-05 and in manufacturer's instructions for fire dampers shall be followed.

2.11.3.3 Splitters and Manual Balancing Dampers

Splitters and manual balancing dampers shall be furnished with accessible operating mechanisms. Where operators occur in finished portions of the building, operators shall be chromium plated with all exposed edges rounded. Splitters shall be operated by quadrant operators or 3/16 inch rod brought through the side of the duct with locking setscrew and bushing. Two rods are required on splitters over 8 inches. Manual volume control dampers shall be operated by locking-type quadrant operators. Dampers and splitters shall be 2 gauges heavier than the duct in which installed. Unless otherwise indicated, multileaf dampers shall be opposed blade type with maximum blade width of 12 inches. Access doors or panels shall be provided for all concealed damper operators and locking setscrews. Unless otherwise indicated, the locking-type quadrant operators for dampers, when installed on ducts to be thermally insulated, shall be provided with stand-off mounting brackets, bases, or adapters to provide clearance between the duct surface and the operator not less than the thickness of the insulation. Stand-off mounting items shall be integral with the operator or standard accessory of the damper manufacturer. Volume dampers shall be provided where indicated.

2.11.3.4 Air Deflectors and Branch Connections

Air deflectors shall be provided at all duct mounted supply outlets, at all takeoff or extension collars to supply outlets, at all duct branch takeoff connections, and at all 90 degree elbows, as well as at all locations as indicated on the drawings or shown in the Sheet Metal and Air Contractors National Association manuals. Air deflectors, except those installed in 90 degree elbows, shall be provided with an approved means of adjustment. Adjustment shall be made from easily accessible means inside the duct or from an adjustment with sturdy lock on the face of the duct. When installed on ducts to be thermally insulated, external adjustments shall be provided with stand-off mounting brackets, integral with the adjustment device, to provide clearance between the duct surface and the adjustment device not less than the thickness of the thermal insulation. Air deflectors shall be factory-fabricated units consisting of curved turning vanes or louver blades designed to provide uniform air distribution and change of direction with minimum turbulence or pressure loss. Air deflectors shall be factory or field assembled. Blade air deflectors, also called blade air extractors, shall be approved factory fabricated units consisting of equalizing grid and adjustable blade and lock. Adjustment shall be easily made from the face of the diffuser or by position adjustment and lock external to the duct. Stand-off brackets shall be provided on insulated ducts and are described herein before. Fixed air deflectors, also called turning vanes, shall be provided in all 90 degree elbows. Turning vanes shall be designed as shown in the Sheet Metal and Air Condition Contractors National Association manuals.

2.11.4 Duct Sleeves, Framed Prepared Openings, Closure Collars

2.11.4.1 Duct Sleeves

Duct sleeves shall be provided for all round ducts 15 inches in diameter or less passing through floors, walls, ceilings, or roof, and installed during construction of the floor, wall, ceiling, or roof. Round ducts larger than 15 inches in diameter and all square, and rectangular ducts passing through floors, walls, ceilings, or roof shall be installed through framed prepared openings. The Contractor shall be responsible for the proper size and location of sleeves and prepared openings. Sleeves and framed openings are also required where grilles, registers, and diffusers are installed at the openings. Framed prepared openings shall be fabricated from 20 gauge galvanized steel, unless otherwise indicated. Where sleeves are installed in bearing walls or partitions, black steel pipe, ASTM A 53, Schedule 20 shall be used. Sleeve shall provide 1 inch clearance between the duct and the sleeve or 1 inch clearance between the insulation and the sleeve for insulated ducts.

2.11.4.2 Framed Prepared Openings

Openings shall have 1 inch clearance between the duct and the opening or 1 inch clearance between the insulation and the opening for insulated ducts.

2.11.4.3 Closure Collars

Collars shall be fabricated of galvanized sheet metal not less than 4 inches wide, unless otherwise indicated, and shall be installed on exposed ducts on each side of walls or floors where sleeves or prepared openings are provided. Collars shall be installed tight against surfaces. Collars shall fit snugly around the duct or insulation. Sharp edges of the collar around insulated duct shall be ground smooth to preclude tearing or puncturing the insulation covering or vapor barrier. Collars for round ducts 15 inches in diameter or less shall be fabricated from 20 gauge galvanized steel. Collars for round ducts larger than 15 inches and all square, and rectangular ducts shall be fabricated from 18 gauge galvanized steel. Collars shall be installed with fasteners on maximum 6 inch centers, except that not less than 4 fasteners shall be used.

2.11.5 Sound Attenuation Equipment

2.11.5.1 Acoustical Duct Liner

Acoustical duct lining shall be fibrous glass designed exclusively for lining ductwork and conform to the requirements of ASTM C 1071, Type I and II. Liner composition may be uniform density, graduated density, or dual density, as standard with the manufacturer. Lining shall be coated, not less than 1 inch thick, nominal, and where applicable be of sufficient thickness to be thermally equivalent to the thickness of insulation specified in Section 15250 THERMAL INSULATION FOR MECHANICAL SYSTEMS. Duct sizes shown shall be increased to compensate for the thickness of the lining used.

2.11.6 Diffusers, Registers, and Grilles

Units shall be factory-fabricated of aluminum and shall distribute the specified quantity of air evenly over space intended without causing noticeable drafts, air movement faster than 50 fpm in occupied zone, or dead spots anywhere in the conditioned area. Outlets for diffusion, spread, throw, and noise level shall be as required for specified performance. Performance shall be certified in accordance with ADC 1062:GRD. Inlets and outlets shall be sound rated and certified in accordance with ADC 1062:GRD. Sound power level shall be as indicated. Diffusers shall be provided with volume damper with accessible operator, unless otherwise indicated. Volume dampers shall be opposed blade type for all diffusers.

2.11.6.1 Diffusers

Diffuser types shall be as indicated. Ceiling mounted units shall be furnished with antismudge devices, unless the diffuser unit minimizes ceiling smudging through design features. Diffusers shall be provided with air deflectors of the type indicated. Ceiling mounted units shall be installed with rims tight against ceiling. Suitable trim shall be provided for flush mounted diffusers. Duct collar connecting the duct to diffuser shall be airtight and shall not interfere with volume controller. Return or exhaust units shall be similar to supply diffusers.

2.12 REFRIGERANT PIPING

Refrigerant piping, valves, fittings, and accessories shall be as recommended by the manufacturer and conform to the requirements of ASHRAE 15 and ASME B31.5.

2.12.1 Accessories

2.12.1.1 Filter Driers

Driers shall conform to ARI 710. Sizes 5/8 inch and larger shall be the full flow, replaceable core type. Sizes 1/2 inch and smaller shall be the sealed type. Cores shall be of suitable desiccant that will not plug, cake, dust, channel, or break down, and shall remove water, acid, and foreign material from the refrigerant. Filter driers shall be constructed so that none of the desiccant will pass into the refrigerant lines. Minimum bursting pressure shall be 1,500 psi.

2.12.1.2 Sight Glass and Liquid Level Indicator

a. Assembly and Components: Assembly shall be pressure- and temperature-rated and constructed of materials suitable for the service. Glass shall be borosilicate type. Ferrous components subject to condensation shall be electro-galvanized.

b. Bull's-Eye and Inline Sight Glass Reflex Lens: Bull's-eye and inline sight glass reflex lens shall be provided for dead-end liquid service. For pipe line mounting, two plain lenses in one body suitable for backlighted viewing shall be provided.

d. Moisture Indicator: Indicator shall be a self-reversible action, moisture reactive, color changing media. Indicator shall be furnished with full-color-printing tag containing color, moisture and temperature criteria. Unless otherwise indicated, the moisture indicator shall be an integral part of each corresponding sight glass.

2.12.1.3 Brazing Materials

Brazing materials for refrigerant piping shall be in accordance with AWS A5.8, Classification BCuP-5.

2.13 DRAIN AND MISCELLANEOUS PIPING

Piping, fittings, valves and accessories for drain and miscellaneous services shall be in accordance with Section 15400 PLUMBING, GENERAL PURPOSE.

2.14 FABRICATION

2.14.1 Factory Coating

Unless otherwise specified, equipment and component items, when fabricated from ferrous metal, shall be factory finished with the manufacturer's standard finish, except that items located outside of buildings shall have

weather resistant finishes that will withstand 500 hours exposure to the salt spray test specified in ASTM B 117 using a 25 percent sodium chloride solution. Immediately after completion of the test, the specimen shall show no signs of blistering, wrinkling, cracking, or loss of adhesion and no sign of rust creepage beyond 1/8 inch on either side of the scratch mark. Cut edges of galvanized surfaces where hot-dip galvanized sheet steel is used shall be coated with a zinc-rich coating conforming to ASTM D 520, Type I.

2.14.2 Field Painting

Painting required for surfaces not otherwise specified, and finish painting of items only primed at the factory are specified in Section 09900 PAINTING, GENERAL.

PART 3 EXECUTION

3.1 INSTALLATION

Work shall be performed in accordance with the manufacturer's published diagrams, recommendations, and equipment warranty requirements.

3.1.1 Building Surface Penetrations

Sleeves in nonload bearing surfaces shall be galvanized sheet metal, conforming to ASTM A 653, Coating Class G-90, 20 gauge. Sleeves in load bearing surfaces shall be uncoated carbon steel pipe, conforming to ASTM A 53, Standard weight. Sealants shall be applied to moisture and oil-free surfaces and elastomers to not less than 1/2 inch depth. Sleeves shall not be installed in structural members.

3.1.1.1 General Service Areas

Each sleeve shall extend through its respective wall, floor, or roof, and shall be cut flush with each surface. Pipes passing through concrete or masonry wall or concrete floors or roofs shall be provided with pipe sleeves fitted into place at the time of construction. Sleeves shall be of such size as to provide a minimum of 1/4 inch all-around clearance between bare pipe and sleeves or between jacketed-insulation and sleeves. Except in pipe chases or interior walls, the annular space between pipe and sleeve or between jacket over-insulation and sleeve shall be sealed in accordance with Section 07900 JOINT SEALING.

3.1.1.2 Fire-Rated Penetrations

Penetration of fire-rated walls, partitions, and floors shall be sealed as specified in Section 07270 FIRESTOPPING.

3.1.2 General Piping Installation

3.1.2.1 Brazed Joints

Brazing shall be performed in accordance with AWS-01, except as modified herein. During brazing, the pipe and fittings shall be filled with a pressure regulated inert gas, such as nitrogen, to prevent the formation of scale. Before brazing copper joints, both the outside of the tube and the inside of the fitting shall be cleaned with a wire fitting brush until the entire joint surface is bright and clean. Brazing flux shall not be used. Surplus brazing material shall be removed at all joints. Steel tubing joints shall be made in accordance with the manufacturer's recommendations. Joints in steel tubing shall be painted with the same material as the baked-on coating within 8 hours after joints are made. Tubing shall be protected against oxidation during brazing by continuous purging of the inside of the piping using nitrogen. Piping shall be supported prior to brazing and not be sprung or forced.

3.1.3 Metal Ductwork

Installation shall be in accordance with SMACNA-06 unless otherwise indicated. Duct supports for sheet metal ductwork shall be in accordance with SMACNA-06, unless otherwise specified. Friction beam clamps indicated in SMACNA-06 will not be used. Supports on the risers shall allow free vertical movement of the duct. Supports shall be attached only to structural framing members and concrete slabs. Supports shall not be anchored to metal decking unless a means is provided and approved for preventing the anchor from puncturing the metal decking. Where supports are required between structural framing members, suitable intermediate metal framing shall be provided. Where C-clamps are used, retainer clips shall be provided.

3.1.4 Acoustical Duct Lining

Lining shall be applied in cut-to-size pieces attached to the interior of the duct with nonflammable, fire-resistant adhesive conforming to ASTM C 916, Type I, NFPA 90A, UL 723, and ASTM E 84. Top and bottom pieces shall lap the side pieces and shall be secured with welded pins, adhered clips of metal, nylon, or high impact plastic, and speed washers or welding cup-head pins installed in accordance with SMACNA-06. Welded pins, cup-head pins, or adhered clips shall not distort the duct, burn through, nor mar the finish or the surface of the duct. Pins and washers shall be flush with the surfaces of the duct liner and all breaks and punctures of the duct liner coating shall be sealed with the nonflammable, fire-resistand adhesive. Exposed edges of the liner at the duct ends and at other joints where the lining will be subject to erosion shall be coated with a heavy brush coat of the nonflammable, fire-resistant adhesive to prevent delamination of glass fibers. Duct liner may be applied to flat sheet metal prior to forming duct through the sheet metal brake. Lining at the top and bottom surfaces of the duct shall be additionally secured by welded pins or adhered clips as specified for cut-to-size pieces. Other methods indicated in SMACNA-06 to obtain proper installation of duct liners in sheet metal ducts, including adhesives and fasteners, will be acceptable.

3.1.5 Field Applied Insulation

Field applied insulation shall be as specified in Section 15250 THERMAL INSULATION FOR MECHANICAL SYSTEMS.

3.2 TESTS

Tests shall be conducted in the presence of the Contracting Officer. Utilities for testing shall be provided as specified in the SPECIAL CONTRACT REQUIREMENTS. Electricity required for the tests will be furnished by the Government. Any material, equipment, instruments, and personnel required for the test shall be provided by the Contractor. The services of a qualified technician shall be provided as required to perform all tests and procedures indicated herein. Field tests shall be coordinated with Section 15990 TESTING, ADJUSTING, AND BALANCING OF HVAC SYSTEMS.

3.2.2.4 System Charging and Startup Test

The system shall be charged with the required amount of refrigerant by raising pressure to normal operating pressure and in accordance with manufacturer's procedures. Following charging, the system shall operate with high-side and low-side pressures and corresponding refrigerant temperatures, at design or improved values. The entire system shall be tested for leaks. Fluorocarbon systems shall be tested with halide torch or electronic leak detectors.

3.2 Refrigerant Leakage

If a refrigerant leak is discovered after the system has been charged, the leaking portion of the system shall immediately be isolated from the remainder of the system and the refrigerant pumped into the system receiver or other suitable container. Under no circumstances shall the refrigerant be discharged into the atmosphere.

3.2 Contractor's Responsibility

The Contractor shall, at all times during the installation and testing of the refrigeration system, take steps to prevent the release of refrigerants into the atmosphere. The steps shall include, but not be limited to, procedures which will minimize the release of refrigerants to the atmosphere and the use of refrigerant recovery devices to remove refrigerant from the system and store the refrigerant for reuse or reclaim. At no time shall more than 3 ounce of refrigerant be released to the atmosphere in any one occurrence. Any system leaks within the first year shall be repaired in accordance with the requirements herein at no cost to the Government including material, labor, and refrigerant if the leak is the result of defective equipment, material, or installation.

3.2.1 System Performance Tests

After the foregoing tests have been completed and before each refrigeration system is accepted, tests to demonstrate the general operating characteristics of all equipment shall be conducted by a registered professional engineer or an approved manufacturer's start-up representative experienced in system start-up and testing, at such times as directed. Tests shall cover a period of not less than 48 hours for each system and demonstrate that the entire system is functioning in accordance with the drawings and specifications. Corrections and adjustments shall be made as necessary and tests shall be re-conducted to demonstrate that the entire system is functioning as specified. Prior to acceptance, service valve seal caps and blanks over gauge points shall be installed and tightened. Any refrigerant lost during the system startup shall be replaced. If tests do not demonstrate satisfactory system performance, deficiencies shall be corrected and the system shall be retested.

3.3 CLEANING AND ADJUSTING

3.3.1 Ductwork

Prior to testing, inside of ducts, plenums, and casing shall be thoroughly cleaned of all debris and blown free of small particles of rubbish and dust and then vacuum cleaned before installing outlet faces. Temporary filters shall be provided for fans that are operated during construction. New filters shall be installed after all construction dirt has been removed from the building and the ducts, plenum, casings, and other items specified have been vacuum cleaned. Fans shall be adjusted to the speed indicated by the manufacturer to meet specified conditions.

3.3.2 Equipment

Equipment shall be wiped clean, with all traces of oil, dust, dirt, or paint spots removed. System shall be maintained in this clean condition until final acceptance. Bearings shall be lubricated with oil or grease as recommended by the manufacturer. Belts shall be tightened to proper tension. Control valves and other miscellaneous equipment requiring adjustment shall be adjusted to setting indicated or directed.

3.3.3 Testing, Adjusting, and Balancing

Testing, adjusting, and balancing shall be as specified in Section 15990 TESTING, ADJUSTING AND BALANCING OF HVAC SYSTEMS.

-- End of Section --

SECTION 15895

GENERAL EXHAUST SYSTEM

PART 1 GENERAL

1.1 REFERENCES

The publications listed below form a part of this specification to the extent referenced. The publications are referred to in the text by basic designation only.

AIR MOVEMENT AND CONTROL ASSOCIATION (AMCA)

AMCA 210	(1985) Laboratory Methods of Testing Fans for Rating

AMERICAN BEARING MANUFACTURERS ASSOCIATION (ABEMA)

ABEMA 9	(1990) Load Ratings and Fatigue Life for Ball Bearings
ABEMA 11	(1990) Load Ratings and Fatigue Life for Roller Bearings

AMERICAN SOCIETY FOR TESTING AND MATERIALS (ASTM)

ASTM A 123	(1989a) Zinc (Hot-Dip Galvanized) Coatings on Iron and Steel Products
ASTM A 924	(1994) General Requirements for Steel Sheet, Metallic-Coated by the Hot-Dip Process
ASTM B 117	(1994) Operating Salt Spray (Fog) Testing Apparatus
ASTM D 520	(1984; R 1989) Zinc Dust Pigment
ASTM D 1654	(1992) Evaluation of Painted or Coated Specimens Subjected to Corrosive Environments
ASTM D 3359	(1995) Measuring Adhesion by Tape Test
ASTM E 437	(1992) Industrial Wire Cloth and Screens (Square Opening Series)

NATIONAL ELECTRICAL MANUFACTURERS ASSOCIATION (NEMA)

NEMA MG 1	(1993; Rev 1; Rev 2) Motors and Generators

SHEET METAL AND AIR CONDITIONING CONTRACTORS' NATIONAL ASSOCIATION (SMACNA)

SMACNA-06	(1995) HVAC Duct Construction Standards - Metal and Flexible

1.2 COORDINATION OF TRADES

Ductwork, piping offsets, fittings, and accessories shall be furnished as required to provide a complete installation and to eliminate interference with other construction.

1.3 DELIVERY AND STORAGE

Equipment delivered and placed in storage shall be stored with protection from the weather, humidity and temperature variations, dirt and dust, or other contaminants.

1.4 SUBMITTALS

Government approval is required for submittals with a "GA" designation; submittals having an "FIO" designation are for information only. The following shall be submitted in accordance with Section 01330 SUBMITTAL PROCEDURES:

SD-01 Data

Components and Equipment Data; GA.

Manufacturer's catalog data shall be included with the detail drawings for the following items. The data shall be highlighted to show model, size, options, etc., that are intended for consideration. Data shall be adequate to demonstrate compliance with contract requirements for the following:

d. Fans

SD-04 Drawings

Exhaust Equipment; FIO.

Drawings shall consist of equipment layout including assembly and installation details and electrical connection diagrams; and ductwork layout showing the location of all supports and hangers. Drawings shall include any information required to demonstrate that the system has been coordinated and will properly function as a unit and shall show equipment relationship to other parts of the work, including clearances required for operation and maintenance.

SD-06 Instructions

Test Procedures; FIO.

Proposed test procedures for performance tests of systems, at least 2 weeks prior to the start of related testing.

SD-07 Schedules

Test Schedules; FIO.

Proposed test schedules for hydrostatic test of piping, ductwork leak test, and performance tests, at least 2 weeks prior to the start of related testing.

SD-09 Reports

Test Reports; FIO.

Test reports for the performance tests in booklet form, upon completion of testing. Reports shall document phases of tests performed including initial test summary, repairs/adjustments made, and final test results.

SD-19 Operation and Maintenance Manuals

Exhaust System Manuals; FIO.

Six manuals listing step-by-step procedures required for system startup, operation, shutdown, and routine maintenance, at least 2 weeks prior to field training. The manuals shall include the manufacturer's name, model

number, parts list, list of parts and tools that should be kept in stock by the owner for routine maintenance including the name of a local supplier, simplified wiring and controls diagrams, troubleshooting guide, and recommended service organization (including address and telephone number) for each item of equipment. Each service organization submitted shall be capable of providing 4 hour onsite response to a service call on an emergency basis.

PART 2 PRODUCTS

2.1 STANDARD PRODUCTS

Components and equipment shall be standard products of a manufacturer regularly engaged in the manufacturing of products that are of a similar material, design and workmanship. The standard products shall have been in satisfactory commercial or industrial use for 2 years before bid opening. The 2-year experience shall include applications of components and equipment under similar circumstances and of similar size. The 2 years must be satisfactorily completed by a product which has been sold or is offered for sale on the commercial market through advertisements, manufacturers' catalogs, or brochures. Products having less than a 2-year field service record will be acceptable if a certified record of satisfactory field operation, for not less than 6000 hours exclusive of the manufacturer's factory tests, can be shown. The equipment items shall be supported by a service organization.

2.2 ASBESTOS PROHIBITION

Asbestos and asbestos-containing products shall not be used.

2.3 NAMEPLATES

Equipment shall have a nameplate that identifies the manufacturer's name, address, type or style, model or serial number, and catalog number.

2.4 EQUIPMENT GUARDS AND ACCESS

Rotating parts exposed to personnel contact shall be fully enclosed or guarded according to OSHA requirements.

2.5 ELECTRICAL WORK

Electrical motor-driven equipment specified shall be provided complete with motor, disconnect, motor starter, and controls. Unless otherwise specified, electric equipment, including wiring and motor efficiencies, shall be according to Section 16415 ELECTRICAL WORK, INTERIOR. Electrical characteristics and enclosure type shall be as shown. Unless otherwise indicated, motors of 1 hp and above shall be high efficiency type. Motor starters shall be provided complete with thermal overload protection and other appurtenances necessary. Each motor shall be according to NEMA MG 1 and shall be of sufficient size to drive the equipment at the specified capacity without exceeding the nameplate rating of the motor. Manual control, automatic control, and protective devices required for the operation specified, and any control wiring required for controls and devices, but not shown, shall be provided.

2.6 DUCTWORK COMPONENTS

2.6.1 Metal Ductwork

All aspects of metal ductwork construction shall be as specified in Section 15653 AIR-CONDITIONING SYSTEM (UNITARY TYPE), including duct accessories.

2.6.2 Goosenecks

Goosenecks shall be fabricated from galvanized steel sheets with galvanized structural shapes. Sheet metal thickness, reinforcement, and fabrication shall conform to SMACNA-06. Goosenecks shall be provided with bird screen.

2.6.3 Bird Screens and Frames

Bird screens shall conform to ASTM E 437, Type I, Class 1, 2 by 2 mesh, 0.063 inch diameter aluminum wire or 0.031 inch diameter stainless steel wire. Frames shall be removable type or stainless steel or extruded aluminum.

2.7 AIR SYSTEMS EQUIPMENT

2.7.1 Fans

Fans shall be tested and rated according to AMCA 210. Fans shall be connected to the motors directly. Fans shall be provided with personnel screens or guards on both suction and supply ends, except that the screens need not be provided, unless otherwise indicated, where ducts are connected to the fan. Fan and motor assemblies shall be provided with vibration-isolation supports or mountings as indicated. Vibration-isolation units shall be standard products with published loading ratings. Each fan shall be selected to produce the capacity required at the fan static pressure indicated. Standard AMCA arrangement, rotation, and discharge shall be as indicated.

2.7.1.1 Centrifugal Fans

Centrifugal fans shall be fully enclosed, single-width single-inlet , AMCA Pressure Class I as required or indicated for the design system pressure. Impeller wheels shall be rigidly constructed, accurately balanced both statically and dynamically. Fan blades may be forward curved, backward-inclined or airfoil design. Bearings shall be sleeve type, self-aligning and self-oiling with oil reservoirs, or precision self-aligning roller or ball-type with accessible grease fittings or permanently lubricated type. Grease fittings shall be connected to tubing and serviceable from a single accessible point. Bearing life shall be L50 rated at not less than 200,000 hours as defined by ABEMA 9 and ABEMA 11. Fan shafts shall be steel, accurately finished, and shall be provided with key seats and keys for impeller hubs. Each fan outlet shall be of ample proportions and shall be designed for the attachment of angles and bolts for attaching flexible connections. Motors, unless otherwise indicated, shall not exceed 1800 rpm and shall have open enclosures. Motor starters shall be magnetic, across-the-line type with general-purpose enclosure. Remote manual switch with pilot indicating light shall be provided in the mechanical room. Fan shall be interlocked with air handling units as indicated. All relays, controls, wiring, and conduit shall be provided to accomplish the sequence of control indicated on the drawings.

2.8 FACTORY PAINTING

Units which are not of galvanized construction according to ASTM A 123 or ASTM A 924 shall be factory painted with a corrosion resisting paint finish. Internal and external ferrous metal surfaces shall be cleaned, phosphatised and coated with a paint finish which has been tested according to ASTM B 117, ASTM D 1654, and ASTM D 3359. Evidence of satisfactory paint performance for a minimum of 125 hours for units to be installed indoors and 500 hours for units to be installed outdoors shall be submitted. Rating of failure at the scribe mark shall be not less than 6, average creepage not greater than 1/8 inch. Rating of the inscribed area shall not be less than 10, no failure. On units constructed of galvanized steel which have been welded, exterior surfaces of welds or welds that have burned through from the interior shall receive a final shop docket of zinc-rich protective paint according to ASTM D 520 Type I.

PART 3 EXECUTION

3.1 INSTALLATION

Work shall be installed as shown and according to the manufacturer's diagrams and recommendations.

3.1.1 Equipment and Installation

Frames and supports shall be provided for fans.

3.1.2 Ductwork

Installation shall be as specified in Section 15653 AIR CONDITIONING SYSTEM (UNITARY TYPE) except flexible duct shall not be used to connect to grilles.

3.2 CLEANING AND ADJUSTING

Inside of ducts and fan shall be thoroughly cleaned of debris and blown free of small particles of rubbish and dust and then shall be vacuum cleaned before installing outlet faces. Equipment shall be wiped clean, with traces of oil, dust, dirt, or paint spots removed. System shall be maintained in this clean condition until final acceptance. Bearings shall be properly lubricated with oil or grease as recommended by the manufacturer.

3.3 TESTING, ADJUSTING, AND BALANCING

Testing, adjusting, and balancing shall be as specified in Section 15990 TESTING, ADJUSTING AND BALANCING OF HVAC SYSTEMS. Testing, adjusting, and balancing shall begin only when the air supply and distribution, including controls, has been completed, with the exception of performance tests.

3.4 PERFORMANCE TESTS

After testing, adjusting, and balancing has been completed as specified, each system shall be tested as a whole to see that all items perform as integral parts of the system and temperatures and conditions are evenly controlled throughout the building. Corrections and adjustments shall be made as necessary to produce the conditions indicated or specified. Tests shall cover a period sufficient to demonstrate that the entire system is functioning according to the specifications.

-- End of Section --

SECTION 15940

EMERGENCY RESPONSE VEHICLE EXHAUST SYSTEM(S)

PART 1 GENERAL

1.1 REFERENCES

The publications listed below form a part of this specification to the extent referenced. The publications are referred to in the text by basic designation only.

AIR MOVEMENT AND CONTROL ASSOCIATION (AMCA)

AMCA 210 (1985)	Laboratory Methods of Testing Fans for Rating

AMERICAN SOCIETY FOR TESTING AND MATERIALS (ASTM)

ASTM A 36	(1994a) Carbon Structural Steel
ASTM A 53	(1995a) Pipe, Steel, Black and Hot-Dipped, Zinc-Coated Welded and Seamless
ASTM A 167	(1993) Stainless and Heat-Resisting Chromium-Nickel Steel Plate, Sheet, and Strip
ASTM A 193	(1996) Alloy-Steel and Stainless Steel Bolting Machine Materials for High-Temperature Service
ASTM A 307	(1994) Carbon Steel Bolts and Studs, 60 000 PSI Tensile Strength
ASTM A 569	(199la; R 1993) Steel, Carbon (0.15 Maximum, Percent), Hot-Rolled Sheet and Strip Commercial Quality
ASTM A 924	(1995) General Requirements for Steel Sheet, Metallic-Coated by the Hot-Dip Process
ASTM B 32	(1995) Solder Metal
ASTM B 117	(1994) Operating Salt Spray (Fog) Testing Apparatus
ASTM E 437	(1992) Industrial Wire Cloth and Screens (Square Opening Series)

This section revised
by AMDT 0001

AMERICAN SOCIETY OF MECHANICAL ENGINEERS (ASME)

ASME BPV IX	(1995; Addenda Dec 1995) Boiler and Pressure Vessel Code; Section IX, Welding and Brazing Qualifications

AMERICAN WELDING SOCIETY (AWS)

AWS A5.8	(l992) Filler Metals for Brazing and Braze Welding

SHEET METAL AIR CONDITIONING CONTRACTORS' NATIONAL ASSOCIATION (SMACNA)

SMACNA-08	(1977) Round Industrial Duct Construction Standards

1.2 GENERAL REQUIREMENTS

1.2.1 Standard Products

Material and equipment shall be a standard product of a manufacturer regularly engaged in the manufacture of the product and shall essentially duplicate items that have been in satisfactory use for at least 2 years prior to bid opening. The system shall be an integrated, packaged exhaust system and all items will be the product of the system manufacturer. System component parts may be by other manufacturers. Equipment shall be supported by a service organization that is, in the opinion of the Contracting Officer, reasonably convenient to the site.

1.2.2 Nameplates

Each major component of equipment shall have the manufacturer's name, address, type or style, model or serial number, and catalog number on a plate secured to the equipment.

1.2.3 Equipment Guards and Access

Belts, pulleys, chains, gears, couplings, projecting setscrews, keys, and other rotating parts exposed to personnel contact shall be fully enclosed or guarded. High temperature equipment and piping exposed to contact by personnel or where it creates a potential fire hazard shall be properly guarded or covered with insulation of a type specified. Support platforms shall be provided where shown and shall be constructed in accordance with Section 05500 MISCELLANEOUS METAL.

1.2.4 Verification of Dimensions

The Contractor shall become familiar with all details of the work, verify all dimensions in the field including vehicle type and size and advise the Contracting Officer of any discrepancy before performing the work.

This section revised
by AMDT 0001

1.3 SUBMITTALS

Government approval is required for submittals with a “GA” designation; submittals having an "FIO" designation are for information only. The following shall be submitted in accordance with Section 01330 SUBMITTAL PROCEDURES:

SD-01 Data

Exhaust System; FIO.

Spare parts data for each different item of material and equipment specified, after approval of detail drawings and not later than 1 month before the date of beneficial occupancy. Data shall include a complete list of parts and supplies with current unit prices and source of supply.

SD-04 Drawings

Exhaust System; GA.

Detail drawings consisting of a complete list of equipment and materials, including manufacturer's descriptive and technical literature, performance charts and curves, catalog cuts, and installation instructions. Detail drawings shall also contain complete duct, wiring, and schematic diagrams and any other details to demonstrate that the system has been coordinated and will properly function as a unit. Drawings shall show proposed layout and anchorage of equipment and appurtenances, and equipment in relation to other parts of the work including clearances required for maintenance and operation.

SD-06 Instructions

Exhaust System; FIO.

Proposed diagrams, instructions, and other sheets, prior to posting. Framed instructions under glass or in laminated plastic shall be posted where directed, including wiring and control diagrams showing the complete layout of the entire system. Condensed operating instructions explaining preventive maintenance procedures, methods of checking the system for normal safe operation, and procedures for safely starting and stopping the system shall be prepared in typed form, framed as specified above for the wiring and control diagrams and posted beside the diagrams. The framed instructions shall be posted before acceptance testing of the systems.

SD-09 Reports

Tests; GA

Test reports in booklet form showing all field tests performed to adjust each component and all field tests performed to prove compliance with the specified performance criteria, upon completion and testing of the installed system. Each test report shall indicate the final position of controls.

This section revised
by AMDT 0001

1.4 DELIVERY AND STORAGE

All equipment delivered and placed in storage shall be protected from the weather, humidity, temperature variations, dirt, dust, or other contaminants.

1.5 OPERATION AND MAINTENANCE MANUALS

Six complete copies of operating instructions outlining the step-by-step procedures required for system startup, operation and shutdown for the exhaust system shall be provided. The instructions shall include the manufacturer's name, model number, service manual, parts list, and brief description of all equipment and their basic operating features. Six complete copies of maintenance instructions listing routine maintenance procedures, possible breakdowns and repairs, and troubleshooting guides shall be provided. The instructions shall include duct and equipment layout and simplified wiring and control diagrams of the system as installed.

PART 2 PRODUCTS

2.1 MATERIALS AND EQUIPMENT

Materials and equipment shall conform to the following requirements.

2.1.1 Screen

ASTM E 437, type and class as required for the application.

2.1.2 Iron and Steel Sheets

2.1.2.1 Galvanized Iron and Steel

ASTM A 924, Coating Designation G90.

2.1.2.2 Uncoated Steel

ASTM A 569, condition, and type best suited to intended use.

2.1.2.3 Stainless Steel

ASTM A 167, Type 304.

2.1.3 Steel Structural Shapes

ASTM A 36.

2.1.4 Solder Silver

AWS A5.8, brazing alloy; grade to suit application.

2.1.5 Solder

ASTM 8 32, composition to suit application.

This section revised
by AMDT 0001

2.1.6 Bolts and Nuts

Bolts and nuts, except as required for high temperature exhaust applications, shall be in accordance with ASTM A 307. Bolts and nuts used for exhaust applications where the temperature of the bolt may rise above 400 degrees F or used as flange bolts in corrosion resistant material shall be in accordance with ASTM A 193 Class 2. The bolt head shall be marked to identify the manufacturer and the standard with which the bolt complies in accordance with ASTM A 307 or ASTM A 193 as applicable.

2.2 ELECTRICAL WORK

Electrical motor-driven equipment shall be provided complete with motor starters, disconnect switches, high efficiency motors and all necessary controls. Electrical equipment, wiring, and motor efficiencies shall be in accordance with Section 16415 ELECTRICAL WORK, INTERIOR. Motor starters shall be provided complete with properly sized thermal-overload protection and other appurtenances necessary for the motor control specified. Manual or automatic control and protective or signal devices required for the operation specified, and any control wiring required for control devices but not shown, shall be provided.

2.3 AIR MOVING DEVICES

2.3.1 General

Fans shall be tested and rated in accordance with the standards of AMCA 210. Fans shall be direct drive type rated for the temperature indicated. Fans and motors shall be provided with vibration isolation supports or mountings. Vibration isolation units shall be standard products with published load ratings, and shall be single rubber-in-shear, neoprene coated fiberglass, double rubber-in-shear springs, or springs under inertia base. Each fan shall be selected to produce the capacity required at the fan total pressure indicated. Standard AMCA arrangements shall be provided unless otherwise indicated and the rotation and discharge shall be as indicated. Fans shall have nonoverloading characteristics. Fan housing shall be constructed of spark resistant cast aluminum using a two piece split construction jointed by high temperature silicon gaskets. Fan impellers shall be constructed of spark resistant cast aluminum and shall be accurately balanced both statically and dynamically when installed in the assembled fan unit. Fans shall be free of objectionable vibration or noise. Certified performance curves indicating that the fan supplied will operate in its most efficient operating range will be provided. In addition, "sound power" ratings shall be furnished with each fan. Each fan shall be selected to produce the capacity required at the fan total pressure indicated. Stackheads, flashing, and bird screens shall be provided where indicated.

2.3.2 Centrifugal Fans

Centrifugal fans shall be fully enclosed, single-width, single-inlet as required or indicated. Impeller wheels shall be radial nonoverloading type. Fan wheels over 36 inches diameter shall have overhung pulleys and a

This section revised
by AMDT 0001

bearing on each side of the wheel. Fan wheels 36 inches or less in diameter may have one or more extra-long bearings between the fan wheel and the drive. The bearings shall be self-aligned ball-bearing type with provisions for lubrication. Fan shafts shall be steel, accurately finished, and shall be provided with key and key seats for impeller hubs and fan pulleys. The fans shall be furnished with factory-finish coating. Motor shall have totally enclosed fan cooled enclosure, unless otherwise indicated. Motor starters shall be magnetic across-the-line with general-purpose enclosures with control transformer, protection against single phasing, and all necessary control components to function as follows: Upon the return of an emergency vehicle to the apparatus bay floor, the flexible hose will be connected by fire station personnel to the tail pipe of the vehicle and the tail pipe adapter will be inflated by the manual fill valve located on the flexible hose. Exhaust fan shall start automatically upon attachment. The vehicle will then be driven to it's parking position and the engine shut down. The exhaust fan shall continue to run for three minutes after the engine has been shut down, after the three minute delay, the exhaust fan shall be de-energized automatically. Upon an emergency dispatch of the vehicle, the exhaust fan shall automatically start when the engine is started. As the vehicle leaves the apparatus bay, the flexible hose with tail pipe adapter shall travel along the balancer track with spring loaded balancer. The balancer shall keep excess hose off the floor during vehicle travel. As the hose reaches the end of the track, the uncoupling valve shall release compressed air from the adapter. The deflated adapter shall be designed to smoothly uncouple from the vehicle exhaust pipe. The motor starter shall be energized by the starting of the vehicle engine and contacts shall be maintained closed for as long as the engine is running and connected to the exhaust system and the contacts shall open after a three minute delay upon shut down of the engine or disconnection for the exhaust system.

2.4 DUCTWORK

2.4.1 General

Duct shall be constructed of stainless steel sheets of the minimum gauge thickness for ducts as required in SMACNA-08. Ducts shall be constructed and sealed in accordance with SMACNA-08 for a negative pressure of 10 inch water gauge static pressure. Ducts, unless otherwise approved, shall be round with longitudinal lock seam and conform to the dimensions indicated. Ducts shall be straight and smooth on the inside with airtight joints. Where ducts with crimped ends are used to make up joints, the joints shall have crimp and bead. The bead shall provide a rigid stop for the mating open end to seat against. Steel spiral wound duct is not acceptable.

2.4.2 Fittings

Reducing fittings shall have a minimum of 1 inch increase in diameter per 8 inches in length. Elbows shall have a centerline radius of not less than 1-1/2 times the diameter. Branches shall stub into mains at main expansion points at an angle of not more than 30 degrees with the centerline of the main duct in the direction of air flow, unless otherwise indicated or approved. Where riser ducts with single or multiple inlets are indicated, the riser duct shall connect into the bottom of the main duct at an angle

This section revised
by AMDT 0001

as specified for branches. Where flexible connections connect to the main duct, the duct branch takeoff or stub shall be braced with approved metal straps or members.

2.4.3 Cleanout

Cleanout shall be provided on the end of the main ductwork opposite the end of the fan suction connection. The cleanout opening shall be sized to the approximate inside area of the duct. Removable airtight caps or flange type covers of minimum gauge thickness as the main duct shall be provided. Other cleanout openings shall be provided where indicated.

2.4.4 Apparatus Connections

Where sheet metal connections are made to fan suction and discharge, or where ducts of dissimilar metals are connected, an approved noncombustible flexible connection approximately 6 inches wide shall be installed and securely fastened by zinc-coated steel clinch-type draw bands for round ducts. For rectangular ducts the flexible connections locked to metal collars shall be installed using normal duct construction methods.

2.4.5 Duct Test Holes

Test holes with covers shall be provided where indicated, directed, or where necessary in ducts and plenums for using Pitot tubes for taking air measurements to balance the air systems.

2.4.6 Duct Sleeves and Framed Openings

Duct sleeves shall be provided for all round ducts 15 inch diameter or less passing through floors, walls, ceilings, or roofs. Sleeves in nonload bearing walls shall be fabricated of 20 gauge steel sheets conforming to ASTM A 924. Sleeves in load-bearing walls shall be fabricated of standard-weight galvanized steel pipe conforming to ASTM A 53. Round ducts larger than 15 inch diameter and all square and rectangular ducts passing through floors, walls, ceilings, or roofs shall be installed through framed openings. Structural steel members for framed openings shall conform to ASTM A 36. Framed openings shall provide 1 inch clearance between the duct and the opening. Closure collar of galvanized steel not less than 4 inches wide shall be provided on each side of walls or floors where sleeves or framed openings are provided. Collars for round ducts 15 inch diameter or less shall be fabricated from 20 gauge, galvanized steel. Collars for round, square or rectangular ducts with minimum dimension over 15 inches shall be fabricated from 18 gauge, galvanized steel.

2.5 EXHAUST TUBING SYSTEM

2.5.1 Pneumatic Tailpipe Adapters

Tailpipe adapter shall be molded of high temperature polymer composite and constructed of a multi-layer dual air bag lined and reinforced with kevlar synthetic cord. Adapter shall be capable of internally expanding to accommodate tail pipes ranging in size from l-inch to 6-inch. When not in use the adapter shall inflate to completely shut-off all air flow through

This section revised
by AMDT 0001

the adapter. Adapter holding strength shall be 10 to 15 psi under normal use and shall have a minimum bursting pressure of 100 psi. Adapter shall be equipped with a positive lock seal connection to a 1 piece 60 to 70 degree reducing elbow. The tailpipe adapter shall be provided with all necessary compressed air hose, piping, valves, and controls to function as indicate. A manual fill/deflate valve shall be push button and shall be provided with automatic deflation switching and exhaust port for bleeding of adapter. An uncoupling valve with mounting bracket shall be provided to allow automatic activation of exhaust port of manual fill valve. Adapter shall be suitable for undercarriage tail pipes.

2.5.2 Hose Saddle

A hose saddle shall be provided to prevent the hose from collapsing at the point of connection to the balancer cable. Saddle shall be heavy duty molded rubber or stainless steel. Saddle shall be securely attached to the hose.

2.5.3 Flexible Exhaust Tubing

Flexible exhaust hose shall be 4-inch diameter consisting of 4-ply neoprene impregnated fabric laminated over a steel wire helix bound with a protective wear strip. Protective wear strip shall be safety yellow. Length of hose shall be as required for proper operation of the exhaust system.

2.5.4 Flexible Tubing Suspension (Balancer) System

The flexible tubing suspension system shall suspend the flexible tubing overhead when not in use; allowing it to be lowered to the operating level, when required. The suspension system shall be furnished complete with cable, pulleys, and operating mechanism. The suspension system shall be cast aluminum with adjustable weight and cable return control feature. The balancer shall have a minimum lifting capacity of 30 pounds. Cable length shall be as required for the proper operation of the exhaust system. Cable shall be stainless steel aircraft type with a stainless steel one-way safety link termination. The balancer shall travel along a structural track. The track shall be hung from the building structure and laterally braced as required to provide a rigid mounting.

2.5.5 Safety Disconnect Coupling

Disconnect coupling shall consist of two aluminum collars held together by a reusable rubber mating band. The reusable breakaway mating band shall have a maximum release tension of 88 pounds. The stationary collar shall be equipped with an expanded metal debris screen to prevent foreign material from entering the air stream after disconnection.

2.6 DAMPERS

Dampers shall be of the blast gate type. Damper blades shall be not less than 16 gauge thickness of stainless steel. Blast gate dampers shall be two piece construction with adjustable sliding gate and setscrew.

This section revised
by AMDT 0001

2.7 FACTORY COATING

Equipment and component items, when fabricated from ferrous metal, shall be factory finished with the manufacturers standard finish except that items located outside of building shall have weather-resistant finishes that will withstand 500 hours exposure to the salt spray test specified in ASTM B 117, using a 5 percent sodium chloride solution as specified in ASTM B 117. Immediately after completion of the test, the specimen shall show no sign of blistering, wrinkling, cracking, or loss of adhesion, and no sign of rust creepage beyond 1/8 inch on either side of the scratch mark.

PART 3 EXECUTION

3.1 INSTALLATION

3.1.1 Exhaust System

The vehicle exhaust system shall be installed as indicated and recommended by the manufacturer. Welding and brazing shall conform to ASME BPV IX. Horizontal sections of the main duct shall be installed with the longitudinal lock seam on the top. Slip joints shall be sealed in accordance with SMACNA-08. Riser duct shall be supported and anchored to the structure as indicated. Main duct shall be attached to the structural members of the building as recommended by SMACNA-08.

3.1.2 Building Surface Penetrations

Sleeves or framed openings shall be utilized where duct penetrates building surfaces. Penetrations shall be sealed. The space between the sleeve or framed opening and the duct shall be packed with mineral wool or other approved material. Closure collars shall be installed around the duct on both sides of the penetrated surface. Collars shall fit tight against the building surfaces and snugly around the duct.

3.2 FIELD PAINTING AND FINISHING

Painting required for surfaces not otherwise specified and finish painting of items only primed at the factory shall be as specified in Section 09900 PAINTING, GENERAL.

3.3 TESTS

Each exhaust system and inlet shall be balanced to produce the indicated air quantities within 10 percent at the conditions shown. Control devices shall be set to control at the points indicated or directed. Bearings shall be lubricated, and the speed, direction or rotation of each fan shall be checked. The running current of each motor shall be checked. Upon completion, and prior to acceptance of the installation, the, exhaust system shall be tested at operating conditions to demonstrate satisfactory functional and operating efficiency. Operating tests shall cover a period of not less than 2 hours for each system, and all tests shall be conducted in the presence of the Contracting Officer. If tests do not demonstrate satisfactory operation of the exhaust system, deficiencies shall be corrected and retested. All instruments, facilities, and labor required to

This section revised
by AMDT 0001

properly conduct the tests shall be provided by the Contractor. The electricity required for testing will be furnished by the Government.

3.4 TRAINING

The Contractor shall conduct a training course for the operating staff as designed by the Contracting Officer. The training period shall consist of a total 4 hours of normal working time and shall start after the system is functionally completed but prior to final acceptance tests. The field instructions shall cover all of the items contained in the Operation and Maintenance Manuals, as well as demonstrations of routine maintenance operations. The Contracting Officer shall be notified at least 14 days prior to date of proposed conduction of the training course.

-- End of Section --

This section revised
by AMDT 0001

SECTION 15950

HEATING, VENTILATING AND AIR CONDITIONING (HVAC) CONTROL SYSTEMS

PART 1 GENERAL

1.1 REFERENCES

The publications listed below form a part of this specification to the extent referenced. The publications are referred to in the text by basic designation only.

NATIONAL ELECTRICAL MANUFACTURERS ASSOCIATION (NEMA)

NEMA 250	(1991) Enclosures for Electrical Equipment (1000 Volts Maximum)

UNDERWRITERS LABORATORIES (UL)

UL 508	(1993) Industrial Control Equipment

1.2 GENERAL REQUIREMENTS

1.2.1 Verification of Dimensions

The Contractor shall become familiar with all details of the work, shall verify all dimensions in the field, and shall advise the Contracting Officer of any discrepancy before performing any work.

1.2.2 Drawings

Because of the small scale of the drawings, it is not possible to indicate all offsets, fittings, and accessories that may be required. The Contractor shall investigate the mechanical, electrical, and finish conditions that could affect the work to be performed, shall arrange such work accordingly, and shall furnish all work necessary to meet such conditions.

1.3 SUBMITTALS

Government approval is required for submittals with a "GA" designation; submittals having an "FIO" designation are for information only. The following shall be submitted in accordance with Section 01330 SUBMITTAL PROCEDURES:

SD-01 Data

Equipment Compliance Booklet; GA.

An HVAC control system equipment compliance booklet (ECB) in indexed booklet form with numbered tabs separating the information on each device. It shall consist of, but not be limited to, data sheets and catalog cuts which document compliance of all devices and components with the specifications. The ECB shall be indexed in alphabetical order by the unique identifiers. Devices and components which do not have unique identifiers shall follow the devices and components with unique identifiers and shall be indexed in alphabetical order according to their functional name. The ECB shall include a bill of materials for each HVAC control system. The bill of materials shall function as the table of contents for the ECB and shall include the device's unique identifier, device function, manufacturer, model/part/catalog number used for ordering, and tab number where the device information is located in the ECB.

SD-04 Drawings

HVAC Control System; GA.

Drawings on A1 34 by 22 inch sheets in the form and arrangement shown. The drawings shall use the same abbreviations, symbols, nomenclature and device identifiers shown. Each control-system element on a drawing shall have a unique identifier as shown. All HVAC control system drawings shall be delivered together as a complete submittal. Drawings shall be submitted for each HVAC system.

SD-08 Statements

Commissioning Procedures; GA .

a. Six copies of the HVAC control system commissioning procedures 60 days prior to the scheduled start of commissioning. Commissioning procedures shall be provided for each HVAC control system. The commissioning procedures shall reflect the format and language of this specification. The commissioning procedures shall be specific for each HVAC system, and shall give detailed step-by-step procedures for commissioning of the system.

b. Commissioning procedures documenting detailed, product-specific set-up procedures, configuration procedures, adjustment procedures, and calibration procedures for each device. Where the detailed product-specific commissioning procedures are included in manufacturer supplied manuals, reference may be made in the HVAC control system commissioning procedures to the manuals.

Performance Verification Test Procedures; FIO.

Six copies of the HVAC control system performance verification test procedures, in indexed booklet form, 60 days before the Contractor's scheduled test dates. The performance verification test procedures shall refer to the devices by their unique identifiers as shown, shall explain, step-by-step, the actions and expected results that will demonstrate that the HVAC control system performs in accordance with the sequences of operation. An HVAC control system performance verification test equipment list shall be included that lists the equipment to be used during performance verification testing. The list shall include manufacturer name, model number, equipment function, the date of the latest calibration, and the results of the latest calibration.

SD-09 Reports

Commissioning Report; FIO.

Six copies of the HVAC control system commissioning report, in indexed booklet form, within 30 days after completion of the system commissioning. The commissioning report shall include data collected during the HVAC control system commissioning and shall follow the format of the commissioning procedures. The commissioning report shall include all controller and time clock checksheets with final values listed for all parameters, setpoints, calibration data for all devices, and results of adjustments.

Performance Verification Test Report; FIO.

Six copies of the HVAC control system performance verification test report, in indexed booklet form, within 30 days after completion of the test. The HVAC control system performance verification test report shall include data collected during the HVAC control system performance verification test. The original copies of data gathered during the performance verification test shall be turned over to the Government after Government approval of the test results.

SD-19 Operation and Maintenance Manuals

Operation Manual; FIO.

Maintenance and Repair Manual; FIO.

Six copies of the HVAC control system operation manual and HVAC control system maintenance and repair manual for each HVAC control system.

1.4 DELIVERY AND STORAGE

Products shall be stored with protection from the weather, humidity and temperature variations, dirt and dust, and other contaminants, within the storage-condition limits published by the equipment manufacturer. Dampers shall be stored so that seal integrity, blade alignment and frame alignment are maintained.

PART 2 PRODUCTS

2.1 MATERIAL AND EQUIPMENT

Material and equipment shall be standard products of a manufacturer regularly engaged in the manufacturing of such products which are of a similar material, design and workmanship. The standard products shall have been in satisfactory commercial or industrial use for 2 years prior to bid opening. The 2-year use shall include applications of equipment and materials under similar circumstances and of similar size. The 2 years experience must be satisfactorily completed by a product which has been sold or is offered for sale on the commercial market through advertisements, manufacturers' catalogs, or brochures. Products having less than a 2-year field service record will be acceptable if a certified record of satisfactory field operation, for not less than 6000 hours exclusive of the manufacturer's factory tests, can be shown. The equipment items shall be supported by a service organization. The Contractor shall submit a certified list of qualified permanent service organizations and qualifications. These service organizations shall be reasonably convenient to the equipment on a regular and emergency basis during the warranty period.

2.2 GENERAL EQUIPMENT REQUIREMENTS

2.2.1 Electrical and Electronic Devices

All electrical and electronic not located within an HVAC control panel shall have a NEMA Type 1 enclosure in accordance with NEMA 250 unless otherwise shown.

2.2.2 Wiring

2.2.2.1 Control Wiring for 24-Volt Circuits

Control wiring for 24-volt circuits shall be 18 AWG minimum, stranded copper and shall be rated for 300-volt service.

2.2.2.2 Wiring for 120-Volt Circuits

Wiring for 120-volt circuits shall be 18 AWG minimum, stranded copper and shall be rated for 600-volt service.

2.2.2.3 Instrumentation Cable

Instrumentation cable shall be 18 AWG, stranded copper, single or multiple-twisted, minimum 2 inch lay of twist, 100 percent shielded pairs, and shall have a 300-volt insulation. Each pair shall have a 20 AWG tinned-copper drain wire and individual overall pair insulation. Cables

shall have an overall aluminum-polyester or tinned-copper cable-shield tape, overall 20 AWG tinned-copper cable drain wire, and overall cable insulation.

2.2.2.4 Transformers

Step-down transformers shall be utilized where control equipment operates at lower than line circuit voltage. Transformers, other than transformers in bridge circuits, shall have primaries wound for the voltage available and secondaries wound for the correct control circuit voltage. Transformers shall be sized so that the connected load is 80 percent of the rated capacity or less. Transformers shall conform to UL 508.

2.3 THERMOSTATS

Thermostat ranges shall be selected so that the setpoint is adjustable without tools between plus or minus 10 degrees F of the setpoint shown. Thermostats shall be electronic or electric.

2.3.1 Nonmodulating Room Thermostats

Contacts shall be single-pole double-throw (SPDT), hermetically sealed, and wired to identified terminals. Maximum differential shall be 5 degrees F. Room thermostats shall be enclosed with separate locking covers (guards). Thermostats shall have manual switches as required by the application.

2.3.2 Microprocessor-Based Room Thermostats

Microprocessor-based thermostats shall have built-in keypads for scheduling of day and night temperature settings. Access to the scheduling mode shall be by a password control code. When out of the scheduling mode, thermostats shall have continuous display of time, with AM and PM indicator, continuous display of day of week, and either continuous display of room temperature with display of temperature setpoint on demand, or continuous display of temperature setpoint with display of room temperature on demand. In the programmable mode, the display shall be used for interrogating time program ON-OFF setpoints for all 7 days of the week. The time program shall allow 2 separate temperature-setback intervals per day. The thermostats shall have a means for temporary and manual override of the program schedule, with automatic program restoration on the following day. Thermostats shall have a replaceable battery to maintain the timing and maintain the schedule in memory for 1 year in the event of a power outage. Maximum differential shall be 2 degrees F.

PART 3 EXECUTION

3.1 GENERAL INSTALLATION CRITERIA

The HVAC control system shall be installed and ready for operation, as specified and shown.

3.1.1 Device Mounting Criteria

Devices mounted in or on piping or ductwork, on building surfaces, in mechanical/electrical spaces, or in occupied space ceilings shall be installed in accordance with manufacturer's recommendations and as shown.

3.1.2 Wiring Criteria

Wiring external to control panels, including low-voltage wiring, shall be installed in metallic raceways. Wiring shall be installed without splices between control devices. Cables and conductors shall be tagged at both ends, with the identifier shown on the shop drawings, in accordance with the requirements of Section 16415 ELECTRICAL WORK, INTERIOR. Other

electrical work shall be as specified in Section 16415 ELECTRICAL WORK, INTERIOR and as shown.

3.2 CONTROL SYSTEM INSTALLATION

3.2.1 Room-Instrument Mounting

Room instruments shall be mounted so that their sensing elements are 5 feet above the finished floor unless otherwise shown. Temperature setpoint device shall be recess mounted.

3.3 CONTROL SEQUENCES OF OPERATION

Control sequences of operations shall be as indicated on the drawings.

3.4 COMMISSIONING PROCEDURES

3.4.1 General Procedures

3.4.1.1 Evaluations

The Contractor shall make the observations, adjustments, calibrations, measurements, and tests of the control systems, set the timeclock schedule, and make any necessary control-system corrections to ensure that the systems function as described in paragraph CONTROL SEQUENCES OF OPERATION.

3.4.1.2 Weather-Dependent Test Procedures

Weather-dependent test procedures that cannot be performed by simulation shall be performed in the appropriate climatic season. When simulation is used, the Contractor shall verify the actual results in the appropriate season.

3.4.1.3 Configuration

The Contractor shall configure each controller for its specified service.

3.4.2 All-Air Small Packaged Unitary

The schedules shall be manually entered for day-temperature and night-temperature setpoints as directed. The fan "AUTO/ON" switch shall be set to "ON". The time shall be manually entered as "DAY". The heating-cooling switch shall be raised to "HEATING" and cooling shall be off. The temperature setpoint shall be raised and heating shall start. The heating/cooling switch shall be set to "COOLING" and heat shall be off. The temperature setpoint shall be lowered and cooling shall start. The fan "AUTO/ON" switch shall be set to "AUTO" and the foregoing procedure repeated. The fan shall start and stop automatically with the starting and stopping of heating and cooling. The time shall be manually entered as "NIGHT". The foregoing procedures shall be repeated. When the system is verified as operational, the correct "DAY" and "NIGHT" temperature settings shall be restored and the correct time restored. The power to the thermostat shall be shut off and it shall be verified that the thermostat clock keeps time. The results of testing of one of each type of unit shall be logged.

3.5 BALANCING, COMMISSIONING, AND TESTING

3.5.1 Coordination with HVAC System Balancing

Commissioning of the control system shall be performed prior to or simultaneous with HVAC system balancing. The Contractor shall tune the HVAC control system after all air-system balancing has been completed, minimum damper positions set and a report has been issued.

3.5.2 Control System Calibration, Adjustments, and Commissioning

Control system commissioning shall be performed for each HVAC system, using test plans and procedures previously approved by the Government. The Contractor shall provide all personnel, equipment, instrumentation, and supplies necessary to perform commissioning and testing of the HVAC control system. All instrumentation and controls shall be calibrated and the specified accuracy shall be verified using test equipment with calibration traceable to NIST standards. Wiring shall be tested for continuity and for ground, open, and short circuits. Mechanical control devices shall be adjusted to operate as specified. Written notification of any planned commissioning or testing of the HVAC Control systems shall be given to the Government at least 14 calendar days in advance.

3.5.3 Performance Verification Test

The Contractor shall demonstrate compliance of the HVAC control system with the contract documents. Using test plans and procedures previously approved by the Government, the Contractor shall demonstrate all physical and functional requirements of the project. The performance verification test shall show, step-by-step, the actions and results demonstrating that the control systems perform in accordance with the sequences of operation. The performance verification test shall not be started until after receipt by the Contractor of written permission by the Government, based on Government approval of the commissioning report and completion of balancing. The tests shall not be conducted during scheduled seasonal off-periods of base heating and cooling systems.

-- End of Section --

US Army Corps
of Engineers
Tulsa District

TWO COMPANY SATELLITE FIRE STATION
FORT SILL, OKLAHOMA

PN: 45652 FY: 98

Volume 5 Specifications Divisions 15 (Section 15990) thru 16

PROFESSIONAL DESIGN GROUP
Consulting Engineers & Architects
3545 NW 58th Suite 200
Oklahoma City, Oklahoma 73112

APRIL 1998

SECTION 15990

TESTING, ADJUSTING, AND BALANCING OF HVAC SYSTEMS

PART 1 GENERAL

1.1 REFERENCES

The publications listed below form a part of this specification to the extent referenced. The publications are referred to in the text by basic designation only.

ASSOCIATED AIR BALANCE COUNCIL (AABC)

AABC MN-1	(1989) National Standards for Testing and Balancing Heating, Ventilating, and Air Conditioning Systems

NATIONAL ENVIRONMENTAL BALANCING BUREAU (NEBB)

NEBB-01	(1991) Procedural Standards for Testing Adjusting Balancing of Environmental Systems

1.2 SUBMITTALS

Government approval is required for submittals with a "GA" designation; submittals having a "FIO" designation are for information only. The following shall be submitted in accordance with Section 01330 SUBMITTAL PROCEDURES:

SD-01 Data

TAB Related HVAC Submittals; FIO.

A list of the TAB Related HVAC Submittals, no later than 7 days after the approval of the TAB Specialist.

SD-04 Drawings

TAB Schematic Drawings and Report Forms; GA.

Three copies of the TAB Schematic Drawings and Report Forms, no later than 21 days prior to the start of TAB field measurements.

SD-06 Instructions

TAB Procedures; GA.

Proposed procedures for TAB, submitted with the TAB Schematic Drawings and Report Forms.

SD-07 Schedules

Systems Readiness Check; FIO.

Proposed date and time to begin the Systems Readiness Check, no later than 7 days prior to the start of the Systems Readiness Check.

TAB Execution; GA.

Proposed date and time to begin field measurements, making adjustments, etc., for the TAB Report, submitted with the Systems Readiness Check Report.

TAB Verification; GA.

Proposed date and time to begin the TAB Verification, submitted with the TAB Report.

SD-08 Statements

TAB Firm; GA.

Certification of the proposed TAB Firm's qualifications by either AABC or NEBB to perform the duties specified herein and in other related Sections, no later than 21 days after the Notice to Proceed. The documentation shall include the date that the Certification was initially granted and the date that the current Certification expires. Any lapses in Certification of the proposed TAB Firm or disciplinary action taken by AABC or NEBB against the proposed TAB Firm shall be described in detail.

TAB Specialist; GA.

Certification of the proposed TAB Specialist's qualifications by either AABC or NEBB to perform the duties specified herein and in other related Sections, no later than 21 days after the Notice to Proceed. The documentation shall include the date that the Certification was initially granted and the date that the current Certification expires. Any lapses in Certification of the proposed TAB Specialist or disciplinary action taken by AABC or NEBB against the proposed TAB Specialist shall be described in detail.

Instrument Calibration; FIO.

List of each instrument to be used during TAB, stating calibration requirements required or recommended by both the TAB Standard and the instrument manufacturer and the actual calibration history of the instrument, submitted with the TAB Procedures. The calibration history shall include dates calibrated, the qualifications of the calibration laboratory, and the calibration procedures used.

SD-09 Reports

Design Review Report; GA.

A copy of the Design Review Report, no later than 14 days after approval of the TAB Firm and the TAB Specialist.

Systems Readiness Check Report; GA.

A copy of completed checklists for each system, each signed by the TAB Specialist, at least 7 days prior to the start of TAB Execution. All items in the Systems Readiness Check Report shall be signed by the TAB Specialist and shall bear the seal of the Professional Society or National Association used as the TAB Standard.

TAB Report; GA.

Three copies of the completed TAB Reports, no later that 7 days after the execution of TAB. All items in the TAB Report shall be signed by the TAB Specialist and shall bear the seal of the Professional Society or National Association used as the TAB Standard.

TAB Verification Report; GA.

Three copies of the completed TAB Verification Report, no later that 7 days after the execution of TAB Verification. All items in the TAB Verification Report shall be signed by the TAB Specialist and shall bear the seal of the Professional Society or National Association used as the TAB Standard.

1.3 SIMILAR TERMS

In some instances, terminology differs between the Contract and the TAB Standard primarily because the intent of this Section is to use the industry standards specified, along with additional requirements listed herein to produce optimal results. The following table of similar terms is provided for clarification only. Contract requirements take precedent over the corresponding AABC or NEBB requirements where differences exist.

SIMILAR TERMS

Contract Term	AABC Term	NEBB Term
TAB Standard	National Standards for Testing and Balancing Heating, Ventilating, and Air Conditioning Systems	Procedural Standards for Testing Adjusting Balancing of Environmental Systems.
TAB Specialist	TAB Engineer	TAB Supervisor
Systems Readiness Check	Construction Phase Inspection	Field Readiness Check Preliminary Field Procedures.

1.4 TAB STANDARD

TAB shall be performed in accordance with the requirements of the standard under which the TAB Firm's qualifications are approved, i.e., AABC MN-1 or NEBB-01, unless otherwise specified herein. All recommendations and suggested practices contained in the TAB Standard shall be considered mandatory. The provisions of the TAB Standard, including checklists, report forms, etc., shall, as nearly as practical, be used to satisfy the Contract requirements. The TAB Standard shall be used for all aspects of TAB, including qualifications for the TAB Firm and Specialist and calibration of TAB instruments. Where the instrument manufacturer calibration recommendations are more stringent than those listed in the TAB Standard, the manufacturer's recommendations shall be adhered to. All quality assurance provisions of the TAB Standard such as performance guarantees shall be part of this contract. For systems or system components not covered in the TAB Standard, TAB procedures shall be developed by the TAB Specialist. Where new procedures, requirements, etc., applicable to the Contract requirements have been published or adopted by the body responsible for the TAB Standard used (AABC or NEBB), the requirements and recommendations contained in these procedures and requirements shall be considered mandatory.

1.5 QUALIFICATIONS

1.5.1 TAB Firm

The TAB Firm shall be either a member of AABC or certified by the NEBB and certified in all categories and functions where measurements or performance are specified on the plans and specifications, including TAB of environmental systems. The certification shall be maintained for the entire duration of duties specified herein. If, for any reason, the firm loses subject certification during this period, the Contractor shall immediately notify the Contracting Officer and submit another TAB Firm for approval. Any firm that has been the subject of disciplinary action by either the AABC or the NEBB within the five years preceding Contract Award shall not be eligible to perform any duties related to the HVAC systems, including TAB. All work specified in this Section and in other related Sections to be performed by the TAB Firm shall be considered invalid if the TAB Firm loses its certification prior to Contract completion and must be performed by an approved successor.

1.5.2 TAB Specialist

The TAB Specialist shall be either a member of AABC or an experienced technician of the Firm certified by the NEBB. The certification shall be maintained for the entire duration of duties specified herein. If, for any reason, the Specialist loses subject certification during this period, the Contractor shall immediately notify the Contracting Officer and submit another TAB Specialist for approval. Any individual that has been the subject of disciplinary action by either the AABC or the NEBB within the five years preceding Contract Award shall not be eligible to perform any duties related to the HVAC systems, including TAB. All work specified in this Section and in other related Sections performed by the TAB Specialist shall be considered invalid if the TAB Specialist loses its certification prior to Contract completion and must be performed by the approved successor.

1.6 TAB SPECIALIST RESPONSIBILITIES

All TAB work specified herein and in related sections shall be performed under the direct guidance of the TAB Specialist.

PART 2 PRODUCTS (Not Applicable)

PART 3 EXECUTION

3.1 DESIGN REVIEW

The TAB Specialist shall review the Contract Plans and Specifications and advise the Contracting Officer of any deficiencies that would prevent the HVAC systems from effectively operating in accordance with the sequence of operation specified or prevent the effective and accurate TAB of the system. The TAB Specialist shall provide a Design Review Report individually listing each deficiency and the corresponding proposed corrective action necessary for proper system operation.

3.2 TAB RELATED HVAC SUBMITTALS

The TAB Specialist shall prepare a list of the submittals from the Contract Submittal Register that relate to the successful accomplishment of all HVAC TAB. The submittals identified on this list shall be accompanied by a letter of approval signed and dated by the TAB Specialist when submitted to the Government. The TAB Specialist shall also ensure that the location and details of ports, terminals, connections, etc., necessary to perform TAB are identified on the submittals.

3.3 TAB SCHEMATIC DRAWINGS AND REPORT FORMS

A schematic drawing showing each system component, including balancing devices, shall be provided for each system. Each drawing shall be accompanied by a copy of all report forms required by the TAB Standard used for that system. Where applicable, the acceptable range of operation or appropriate setting for each component shall be included on the forms or as an attachment to the forms. The schematic drawings shall identify all testing points and cross reference these points to the report forms and procedures.

3.4 TESTING, ADJUSTING, AND BALANCING

3.4.1 TAB Procedures

Step by step procedures for each measurement required during TAB Execution shall be provided. The procedures shall be oriented such that there is a separate section for each system. The procedures shall include measures to ensure that each system performs as specified in all operating modes, interactions with other components (such as exhaust fans, etc.) and

systems, and with all seasonal operating differences, diversity, simulated loads, and pressure relationships required.

3.4.2 Systems Readiness Check

The TAB Specialist shall inspect each system to ensure that it is complete, including installation and operation of controls, and that all aspects of the facility that have any bearing on the HVAC systems, including installation of ceilings, walls, windows, doors, and partitions, are complete to the extent that TAB results will not be affected by any detail or touch-up work remaining. The TAB Specialist shall also verify that all items such as ductwork and piping ports, terminals, connections, etc., necessary to perform TAB shall be complete during the Systems Readiness Check.

3.4.3 Preparation of TAB Report

Preparation of the TAB Report shall begin only when the Systems Readiness Report has been approved. The Report shall be oriented so that there is a separate section for each system. The Report shall include a copy of the appropriate approved Schematic Drawings and TAB Related Submittals, fan curves, etc., along with the completed report forms for each system. The operating points measured during successful TAB Execution and the theoretical operating points listed in the approved submittals shall be marked on the performance curves and tables. Where possible, adjustments shall be made using an "industry standard" technique which would result in the greatest energy savings, such as adjusting the speed of a fan instead of throttling the flow. Any deficiencies outside of the realm of normal adjustments and balancing during TAB Execution shall be noted along with a description of corrective action performed to bring the measurement into the specified range. If, for any reason, the TAB Specialist determines during TAB Execution that any Contract requirement cannot be met, the TAB Specialist shall immediately provide a written description of the deficiency and the corresponding proposed corrective action necessary for proper system operation to the Contracting Officer.

3.4.4 TAB Verification

The TAB Specialist shall recheck ten percent of the measurements listed in the Tab Report and prepare a TAB Verification Report. The measurements selected for verification and the individuals that witness the verification will be selected by the Contracting Officer's Representative (COR). The measurements will be recorded in the same manner as required for the TAB Report. All measurements that fall outside the acceptable operating range specified shall be accompanied by an explanation as to why the measurement does not correlate with that listed in the TAB Report and a description of corrective action performed to bring the measurement into the specified range. If over 20 percent of the measurements selected by the COR for verification fall outside of the acceptable operating range specified, the COR will select an additional ten percent for verification. If over 20 percent of the total tested (including both test groups) fall outside of the acceptable range, the TAB Report shall be considered invalid and all contract TAB work shall be repeated beginning with the Systems Readiness Check.

3.4.5 Marking of Setting

Following approval of TAB Verification Report, the setting of all HVAC adjustment devices including splitters and dampers shall be permanently marked by the TAB Specialist so that adjustment can be restored if disturbed at any time.

3.4.6 Identification of Test Ports

The TAB Specialist shall permanently and legibly identify the location points of duct test ports. If the ductwork has exterior insulation, the

identification shall be made on the exterior side of the insulation. All penetrations through ductwork and ductwork insulation shall be sealed to prevent air leakage or to maintain integrity of vapor barrier.

-- End of Section --

SECTION 15995

COMMISSIONING OF HVAC SYSTEMS

PART 1 GENERAL

1.1 SUBMITTALS

Government approval is required for submittals with a "GA" designation; submittals with "FIO" designation are for information only. The following shall be submitted in accordance with Section 01330 SUBMITTAL PROCEDURES:

SD-01 Data

Commissioning Team; GA.

List of team members who will represent the Contractor in the pre-commissioning checks and functional performance testing, at least 2 weeks prior to the start of pre-commissioning checks. Proposed revision to the list, prior to the start of the impacted work.

SD-06 Instructions

Test Procedures; GA.

Detailed procedures for pre-commissioning checks and functional performance tests, at least 4 weeks prior to the start of pre-commissioning checks.

SD-07 Schedules

Test Schedule; GA.

Schedule for pre-commissioning checks and functional performance tests, at least 2 weeks prior to the start of pre-commissioning checks.

SD-09 Reports

Test Reports; GA.

Completed pre-commissioning checklists and functional performance test checklists organized by system and by subsystem and submitted as one package. The results of failed tests shall be included along with a description of the corrective action taken.

1.2 SEQUENCING AND SCHEDULING

The work described in this Section shall begin only after all work required in related Sections, including Section 15950 HEATING, VENTILATING, AND AIR CONDITIONING (HVAC) CONTROL SYSTEMS and Section 15990 TESTING, ADJUSTING AND BALANCING OF HVAC SYSTEMS, has been successfully completed, and all test and inspection reports and operation and maintenance manuals required in these Sections have been submitted and approved.

PART 2 PRODUCTS (Not Applicable)

PART 3 EXECUTION

3.1 COMMISSIONING TEAM AND CHECKLISTS

The Contractor shall designate team members to participate in the pre-commissioning checks and the functional performance testing specified herein. In addition, the Government will be represented by a representative of the Contracting Officer, the Design Agent's

Representative, and the Using Agency. The team members shall be as follows:

Designation	Function
Q	Contractor's Chief Quality Control Representative
M	Contractor's Mechanical Representative
E	Contractor's Electrical Representative
T	Contractor's Testing, Adjusting, and Balancing Representative
C	Contractor's Controls Representative
D	Design Agent's Representative
O	Contracting Officer's Representative
U	Using Agency's Representative

Each checklist shown in appendices A and B shall be completed by the commissioning team. Acceptance by each commissioning team member of each pre-commissioning checklist item shall be indicated by initials and date unless an "X" is shown indicating that participation by that individual is not required. Acceptance by each commissioning team member of each functional performance test checklist shall be indicated by signature and date.

3.2 TESTS

The pre-commissioning checks and functional performance tests shall be performed in a manner which essentially duplicates the checking, testing, and inspection methods established in the related Sections. Where checking, testing, and inspection methods are not specified in other Sections, methods shall be established which will provide the information required. Testing and verification required by this section shall be performed during the Commissioning phase. Requirements in related Sections are independent from the requirements of this Section and shall not be used to satisfy any of the requirements specified in this Section. The Contractor shall provide all materials, services, and labor required to perform the pre-commissioning checks and functional performance tests. A pre-commissioning check or functional performance test shall be aborted if any system deficiency prevents the successful completion of the test or if any participating non-Government commissioning team member of which participation is specified is not present for the test. The Contractor shall reimburse the Government for all costs associated with effort lost due to tests that are aborted. These costs shall include salary, travel costs and per diem (where applicable) for Government commissioning team members.

3.2.1 Pre-Commissioning Checks

Pre-commissioning checks shall be performed for the items indicated on the checklists in Appendix A. Deficiencies discovered during these checks shall be corrected and retested in accordance with the applicable contract requirements.

3.2.2 Functional Performance Tests

Functional performance tests shall be performed for the items indicated on the checklists in Appendix B. Functional performance tests shall begin only after all pre-commissioning checks have been successfully completed. Tests shall prove all modes of the sequences of operation, and shall verify all other relevant contract requirements. Tests shall begin with equipment or components and shall progress through subsystems to complete systems. Upon failure of any functional performance test checklist item, the Contractor shall correct all deficiencies in accordance with the applicable contract requirements. The checklist shall then be repeated until it has been completed with no errors.

APPENDIX A
PRE-COMMISSIONING CHECKLISTS

Pre-commissioning checklist - Piping

For Gas Piping System

Checklist Item	Q	M	E	T	C	D	O	U
Installation								
a. Piping complete.	___	___	X	___	X	___	___	___
b. As-built shop drawings submitted.	___	___	X	___	X	___	___	___
c. Piping flushed and cleaned.	___	___	X	___	X	___	___	___
d. Strainers cleaned.	___	___	X	___	X	___	___	___
e. Valves installed as required.	___	___	X	___	X	___	___	___
f. Piping insulated as required.	___	___	X	___	X	___	___	___
g. Thermometers and gauges installed as required.	___	___	X	___	X	___	___	___
h. Verify operation of valves.	___	___	X	___	___	___	___	___
i. Air vents installed as specified.	___	___	X	X	X	___	___	___
j. Flexible connectors installed as specified.	___	___	X	X	X	___	___	___
k. Verify that piping has been labeled and valves identified as specified.	___	___	X	___	___	___	___	___
Testing, Adjusting, and Balancing (TAB)								
a. Hydrostatic test complete.	___	___	X	___	X	___	___	___
b. TAB operation complete.	___	___	X	___	___	___	___	___

Pre-commissioning checklist - Piping

For Domestic Water Piping System

Installation								
a. Piping complete.	___	___	X	___	X	___	___	___
b. As-built shop drawings submitted.	___	___	X	___	X	___	___	___
c. Piping flushed and cleaned.	___	___	X	___	X	___	___	___
d. Valves installed as required.	___	___	X	___	X	___	___	___
e. Piping insulated as required.	___	___	X	___	X	___	___	___
f. Verify operation of valves.	___	___	X	___	___	___	___	___
g. Verify that piping has been labeled and valves identified as specified.	___	___	X	___	___	___	___	___

Checklist Item	Q	M	E	T	C	D	O	U
Testing, Adjusting, and Balancing (TAB)								
a. Hydrostatic test complete.	___	___	X	___	X	___	___	___
b. TAB operation complete.	___	___	X	___	___	___	___	___
Pre-commissioning Checklist - Ductwork								
For Air Handler: AHU-1								
Installation								
a. Ductwork complete.	___	___	X	___	X	___	___	___
b. As-built shop drawings submitted.	___	___	X	___	X	___	___	___
c. Fire dampers, smoke dampers, and access doors installed as required.	___	___	X	___	X	___	___	___
d. Ductwork insulated as required.	___	___	X	___	X	___	___	___
e. Thermometers and gauges installed as required.	___	___	___	___	___	___	___	___
f. Verify open/closed status of dampers.	___	___	X	___	X	___	___	___
g. Flexible connectors installed as specified.	___	___	X	___	X	___	___	___
Testing, Adjusting, and Balancing (TAB)								
a. TAB operation complete.	___	___	X	___	X	___	___	___
Pre-commissioning Checklist - Ductwork								
For Air Handler: AHU-2								
Installation								
a. Ductwork complete.	___	___	X	___	X	___	___	___
b. As-built shop drawings submitted.	___	___	X	___	X	___	___	___
c. Fire dampers, smoke dampers, and access doors installed as required.	___	___	X	___	X	___	___	___]
d. Ductwork insulated as required.	___	___	X	___	X	___	___	___
e. Thermometers and gauges installed as required.	___	___	___	___	___	___	___	___
f. Verify open/closed status of dampers.	___	___	X	___	X	___	___	___
g. Flexible connectors installed as specified.	___	___	X	___	X	___	___	___
Testing, Adjusting, and Balancing (TAB)								
a. TAB operation complete.	___	___	X	___	X	___	___	___

Pre-commissioning Checklist - DX Air Cooled Condensing Unit

For Condensing Unit: CD-1

Checklist Item	Q	M	E	T	C	D	O	U
Installation								
a. Condensing unit piped.	___	___	X	X	X	___	___	___
b. Refrigerant pipe leak tested.	___	___	X	X	X	___	___	___
c. Refrigerant pipe evacuated and charged in accordance with manufacturer's instructions.	___	___	X	X	X	___	___	___
d. Check condenser fans for proper rotation.	___	___	X	___	X	___	___	___
e. Any damage to coil fins has been repaired.	___	___	X	___	X	___	___	___
f. Manufacturer's required maintenance/ operational clearance provided.	___	___	X	X	X	___	___	___
Electrical								
a. Power available to unit disconnect.	___	___	___	X	X	___	___	___
b. Power available to unit control panel.	___	___	___	X	___	___	___	___
c. Verify that power disconnect is located within sight of the unit it controls	___	___	___	X	___	___	___	___
Controls								
a. Unit safety/protection devices tested.	___	___	X	X	___	___	___	___
b. Control system and interlocks installed.	___	___	X	X	___	___	___	___
c. Control system and interlocks operational.	___	___	X	X	___	___	___	___

Pre-commissioning Checklist - DX Air Cooled Condensing Unit

For Condensing Unit: CD-2

Installation								
a. Condensing unit piped.	___	___	X	X	X	___	___	___
b. Refrigerant pipe leak tested.	___	___	X	X	X	___	___	___
c. Refrigerant pipe evacuated and charged in accordance with manufacturer's instructions.	___	___	X	X	X	___	___	___
d. Check condenser fans for proper rotation.	___	___	X	___	X	___	___	___
e. Any damage to coil fins has been repaired.	___	___	X	___	X	___	___	___

Checklist Item	Q	M	E	T	C	D	O	U
f. Manufacturer's required maintenance/ operational clearance provided.	___	___	X	X	X	___	___	___
Electrical								
a. Power available to unit disconnect.	___	___	___	X	X	___	___	___
b. Power available to unit control panel.	___	___	___	X	___	___	___	___
c. Verify that power disconnect is located within sight of the unit it controls	___	___	___	X	___	___	___	___
Controls								
a. Unit safety/protection devices tested.	___	___	X	X	___	___	___	___
b. Control system and interlocks installed.	___	___	X	X	___	___	___	___
c. Control system and interlocks operational.	___	___	X	X	___	___	___	___
Pre-commissioning Checklist - Unit Heater								
For Unit Heater: UH-1								
Installation								
a. Gas piping properly connected.	___	___	X	X	X	___	___	___
b. Vent and combustion air as specified.	___	___	X	X	X	___	___	___
d. Any damage has been repaired.	___	___	X	___	X	___	___	___
e. Manufacturer's required maintenance/ operational clearance provided.	___	___	X	X	X	___	___	___
Electrical								
a. Power available to unit disconnect.	___	___	___	X	___	___	___	___
b. Proper motor rotation verified.	___	___	___	X	X	___	___	___
c. Verify that power disconnect is located within sight of the unit it controls.	___	___	___	X	___	___	___	___
Controls								
a. Valves properly installed.	___	___	X	___	___	___	___	___
b. Valves operable.	___	___	X	X	___	___	___	___
c. Verify proper location and installation of thermostat.	___	___	X	___	___	___	___	___
Testing, Adjusting, and Balancing (TAB)								
a. TAB Report submitted.	___	___	X	___	X	___	___	___

Pre-commissioning Checklist - Unit Heater

For Unit Heater: UH-2

Checklist Item	Q	M	E	T	C	D	O	U
Installation								
a. Gas piping properly connected.	___	___	X	X	X	___	___	___
b. Vent and combustion air as specified.	___	___	X	X	X	___	___	___
d. Any damage has been repaired.	___	___	X	___	X	___	___	___
e. Manufacturer's required maintenance/ operational clearance provided.	___	___	X	X	X	___	___	___
Electrical								
a. Power available to unit disconnect.	___	___	___	X	___	___	___	___
b. Proper motor rotation verified.	___	___	___	X	X	___	___	___
c. Verify that power disconnect is located within sight of the unit it controls.	___	___	___	X	___	___	___	___
Controls								
a. Valves properly installed.	___	___	X	___	___	___	___	___
b. Valves operable.	___	___	X	X	___	___	___	___
c. Verify proper location and installation of thermostat.	___	___	X	___	___	___	___	___
Testing, Adjusting, and Balancing (TAB)								
a. TAB Report submitted.	___	___	X	___	X	___	___	___

Pre-commissioning Checklist - Exhaust Fan

For Exhaust Fan: EF-1

Installation								
a. Fan belt adjusted.	___	___	X	___	X	___	___	___
Electrical								
a. Power available to fan disconnect.	___	___	___	X	___	___	___	___
b. Proper motor rotation verified.	___	___	___	___	X	___	___	___
c. Verify that power disconnect is located within sight of the unit it controls.	___	___	___	X	___	___	___	___
Controls								
a. Control interlocks properly installed.	___	___	___	X	___	___	___	___
b. Control interlocks operable.	___	___	___	X	___	___	___	___
c. Dampers/actuators properly installed.	___	___	X	___	___	___	___	___
d. Dampers/actuators operable.	___	___	X	___	___	___	___	___

Checklist Item	Q	M	E	T	C	D	O	U
Testing, Adjusting, and Balancing (TAB)								
a. TAB results +10%/-0% to cfm shown on drawings	___	___	X	___	X	___	___	___
b. TAB Report submitted.	___	___	X	___	X	___	___	___
Pre-commissioning Checklist - Exhaust Fan								
For Exhaust Fan: EF-2								
Installation								
a. Fan belt adjusted.	___	___	X	___	X	___	___	___
Electrical								
a. Power available to fan disconnect.	___	___	___	X	___	___	___	___
b. Proper motor rotation verified.	___	___	___	___	X	___	___	___
c. Verify that power disconnect is located within sight of the unit it controls.	___	___	___	X	___	___	___	___
Controls								
a. Control interlocks properly installed.	___	___	___	X	___	___	___	___
b. Control interlocks operable.	___	___	___	X	___	___	___	___
c. Dampers/actuators properly installed.	___	___	X	___	___	___	___	___
d. Dampers/actuators operable.	___	___	X	___	___	___	___	___
Testing, Adjusting, and Balancing (TAB)								
a. TAB results +10%/-0% to cfm shown on drawings	___	___	X	___	X	___	___	___
b. TAB Report submitted.	___	___	X	___	X	___	___	___
Pre-commissioning Checklist - HVAC System Controls								
For HVAC System: AHU-1								
Installation								
a. As-built shop drawings submitted.	___	___	X	X	___	___	___	___
b. Control components piped and/or wired to each labeled terminal strip.	___	___	X	X	___	___	___	___
c. Control wiring and tubing labeled at all terminations, splices, and junctions.	___	___	X	X	___	___	___	___
d. Shielded wiring used on electronic sensors.	___	___	X	X	___	___	___	___
Testing, Commissioning, and Balancing								
a. Testing, Commissioning, and Balancing Report submitted.	___	___	X	___	___	___	___	___

Pre-commissioning Checklist - HVAC System Controls

For HVAC System: AHU-2

Checklist Item	Q	M	E	T	C	D	O	U
Installation								
a. As-built shop drawings submitted.	___	___	X	X	___	___	___	___
b. Control components piped and/or wired to each labeled terminal strip.	___	___	X	X	___	___	___	___
c. Control wiring and tubing labeled at all terminations, splices, and junctions.	___	___	X	X	___	___	___	___
d. Shielded wiring used on electronic sensors.	___	___	X	X	___	___	___	___
Testing, Commissioning, and Balancing								
a. Testing, Commissioning, and Balancing Report submitted.	___	___	X	___	___	___	___	___

Pre-commissioning Checklist - Single Zone Air Handling Unit

For Air Handling Unit: AHU-1

Installation								
a. Vibration isolation devices installed.	___	___	X	X	X	___	___	___
b. Inspection and access doors are operable and sealed.	___	___	X	___	X	___	___	___
c. Casing undamaged.	___	___	X	X	X	___	___	___
d. Insulation undamaged.	___	___	X	X	X	___	___	___
e. Condensate drainage is unobstructed.	___	___	X	X	X	___	___	___
f. Any damage to coil fins has been repaired.	___	___	X	___	X	___	___	___
g. Manufacturer's required maintenance clearance provided.	___	___	X	X	X	___	___	___
Electrical								
a. Power available to unit disconnect.	___	___	___	X	X	___	___	___
b. Power available to unit control panel.	___	___	___	X	___	___	___	___
c. Proper motor rotation verified.	___	___	___	___	X	___	___	___
d. Verify that power disconnect is located within sight of the unit it controls.	___	___	___	X	___	___	___	___
Coils								
a. Refrigerant piping properly connected.	___	___	X	X	X	___	___	___]
b. Refrigerant piping pressure tested.	___	___	X	X	X	___	___	___]
c. Gas piping pressure tested.	___	___	X	X	X	___	___	___]

Checklist Item	Q	M	E	T	C	D	O	U
d. Any damage to coil fins has been repaired.	___	___	X	___	X	___	___	___
Controls								
a. Dampers/actuators properly installed.	___	___	X	___	___	___	___	___
b. Dampers/actuators operable.	___	___	X	___	___	___	___	___
c. Verify proper location and installation								
Pre-commissioning Checklist - Single Zone Air Handling Unit								
For Air Handling Unit: AHU-1								
of thermostat.	___	___	X	___	___	___	___	___
Testing, Adjusting, and Balancing (TAB)								
a. Construction filters removed and replaced.	___	___	X	___	X	___	___	___
b. TAB results +10%/-0% cfm shown on drawings.	___	___	X	___	X	___	___	___
c. TAB Report submitted.	___	___	X	___	X	___	___	___
Pre-commissioning Checklist - Single Zone Air Handling Unit								
For Air Handling Unit: AHU-2								
Installation								
a. Vibration isolation devices installed.	___	___	X	X	X	___	___	___
b. Inspection and access doors are operable and sealed.	___	___	X	___	X	___	___	___
c. Casing undamaged.	___	___	X	X	X	___	___	___
d. Insulation undamaged.	___	___	X	X	X	___	___	___
e. Condensate drainage is unobstructed.	___	___	X	X	X	___	___	___
f. Any damage to coil fins has been repaired.	___	___	X	___	X	___	___	___
g. Manufacturer's required maintenance clearance provided.	___	___	X	X	X	___	___	___
Electrical								
a. Power available to unit disconnect.	___	___	___	X	X	___	___	___
b. Power available to unit control panel.	___	___	___	X	___	___	___	___
c. Proper motor rotation verified.	___	___	___	___	X	___	___	___
d. Verify that power disconnect is located within sight of the unit it controls.	___	___	___	X	___	___	___	___

Checklist Item	Q	M	E	T	C	D	O	U
Coils								
a. Refrigerant piping properly connected.	___	___	X	X	X	___	___	___]
b. Refrigerant piping pressure tested.	___	___	X	X	X	___	___	___]
c. Gas piping pressure tested.	___	___	X	X	X	___	___	___]
d. Any damage to coil fins has been repaired.	___	___	X	___	X	___	___	___
Controls								
a. Dampers/actuators properly installed.	___	___	X	___	___	___	___	___
b. Dampers/actuators operable.	___	___	X	___	___	___	___	___
c. Verify proper location and installation								
Pre-commissioning Checklist - Single Zone Air Handling Unit								
For Air Handling Unit: AHU-2								
of thermostat.	___	___	X	___	___	___	___	___
Testing, Adjusting, and Balancing (TAB)								
a. Construction filters removed and replaced.	___	___	X	___	X	___	___	___
b. TAB results +10%/-0% cfm shown on drawings.	___	___	X	___	X	___	___	___
c. TAB Report submitted.	___	___	X	___	X	___	___	___

APPENDIX B
FUNCTIONAL PERFORMANCE TESTS CHECKLISTS

Functional Performance Test Checklist - Single Zone Air Handling Unit
For Air Handling Unit: AHU-1

1. Functional Performance Test: Contractor shall verify operation of air handling unit as per specification including the following:

a. The following shall be verified when the supply fan operating mode is initiated:

(1) All dampers in normal position. _____

(2) All valves in normal position. _____

(3) System safeties allow start if safety conditions are met. _____

b. Occupied mode of operation.

(1) Outside air damper at minimum position. _____

(2) Return air damper open. _____

c. The following shall be verified when the supply fan off mode is initiated:

(1) All dampers in normal position. _____

(2) Fan de-energizes. _____

f. Verify cooling coil and furnace operation by varying thermostat set point from cooling set point to heating set point and returning to cooling set point.
_____

2. Certification: We the undersigned have witnessed the above functional performance tests and certify that the item tested has met the performance requirements in this section of the specifications.

Signature and Date

Contractor's Chief Quality Control Representative _____

Contractor's Mechanical Representative _____

Contractor's Electrical Representative _____

Contractor's Testing, Adjusting and Balancing Representative _____

Contractor's Controls Representative _____

Contracting Officer's Representative _____

Using Agency's Representative _____

Functional Performance Test Checklist - Single Zone Air Handling Unit

For Air Handling Unit: AHU-2

1. Functional Performance Test: Contractor shall verify operation of air handling unit as per specification including the following:

a. The following shall be verified when the supply fan operating mode is initiated:

(1) All dampers in normal position. _____

(2) All valves in normal position. _____

(3) System safeties allow start if safety conditions are met. _____

b. Occupied mode of operation.

(1) Outside air damper at minimum position. _____

(2) Return air damper open. _____

b. The following shall be verified when the supply fan off mode is initiated:

(1) All dampers in normal position. _____

(2) Fan de-energizes. _____

c. Verify cooling coil and furnace operation by varying thermostat set point from cooling set point to heating set point and returning to cooling set point. _____

2. Certification: We the undersigned have witnessed the above functional performance tests and certify that the item tested has met the performance requirements in this section of the specifications.

Signature and Date

Contractor's Chief Quality Control Representative _____

Contractor's Mechanical Representative _____

Contractor's Electrical Representative _____

Contractor's Testing, Adjusting and Balancing Representative _____

Contractor's Controls Representative _____

Contracting Officer's Representative _____

Using Agency's Representative _____

Functional Performance Test Checklist - Air Cooled Condensing Unit

For Condensing Unit: CD-1

1. Functional Performance Test: Contractor shall demonstrate operation of refrigeration system as per specifications including the following: Start building air handler to provide load for condensing unit. Activate controls system start sequence as follows.

a. Start air handling unit. Verify control system energizes condensing unit start sequence. _____

b. Shut off air handling equipment to verify condensing unit de-energizes. _____

c. Restart air handling equipment one minute after condensing unit shut down. Verify condensing unit restart sequence. _____

2. Verify condensing unit amperage each line and voltage line to line and line to ground.

	Line 1	Line 2
Amperage	_____	_____
Voltage	_____	
Voltage to ground	_____	_____

3. Record the following information:

Ambient dry bulb temperature _____ degrees F
Ambient wet bulb temperature _____ degrees F
Suction pressure _____ psig
Discharge pressure _____ psig

4. Unusual vibration, noise, etc.
_____

5. Certification: We the undersigned have witnessed the above functional performance tests and certify that the item tested has met the performance requirements in this section of the specifications.

Signature and Date

Contractor's Chief Quality Control Representative _____

Contractor's Mechanical Representative _____

Contractor's Electrical Representative _____

Functional Performance Test Checklist - Air Cooled Condensing Unit

For Condensing Unit: CD-1

Contractor's Testing, Adjusting and Balancing Representative _____

Contractor's Controls Representative _____

Contracting Officer's Representative _____

Using Agency's Representative _____

Functional Performance Test Checklist - Air Cooled Condensing Unit

For Condensing Unit: CD-2

1. Functional Performance Test: Contractor shall demonstrate operation of refrigeration system as per specifications including the following: Start building air handler to provide load for condensing unit. Activate controls system start sequence as follows.

a. Start air handling unit. Verify control system energizes condensing unit start sequence. _____

b. Shut off air handling equipment to verify condensing unit de-energizes.
_____

c. Restart air handling equipment one minute after condensing unit shut down. Verify condensing unit restart sequence. _____

2. Verify condensing unit amperage each line and voltage line to line and line to ground.

	Line 1	Line 2
Amperage	_____	_____
Voltage	_____	
Voltage to ground	_____	_____

3. Record the following information:

Ambient dry bulb temperature _____ degrees F
Ambient wet bulb temperature _____ degrees F
Suction pressure _____ psig
Discharge pressure _____ psig

4. Unusual vibration, noise, etc.
_____

5. Certification: We the undersigned have witnessed the above functional performance tests and certify that the item tested has met the performance requirements in this section of the specifications.
Signature and Date

Contractor's Chief Quality Control Representative _____

Contractor's Mechanical Representative _____

Contractor's Electrical Representative _____

Functional Performance Test Checklist - Air Cooled Condensing Unit

For Condensing Unit: CD-2

Contractor's Testing, Adjusting and Balancing Representative _____

Contractor's Controls Representative _____

Contracting Officer's Representative _____

Using Agency's Representative _____

Functional Performance Test Checklist - Unit Heaters

The Contracting Officer will select unit heaters to be spot-checked during the functional performance test. The number of terminals shall not exceed 2.

1. Functional Performance Test: Contractor shall demonstrate operation of selected unit heaters as per specifications including the following:

a. Verify unit heater response to room temperature set point adjustment. Changes to be heating set point to heating set point minus 10 degrees and return to heating set point. _____

b. Check blower fan speed. _____rpm

c. Check heating mode inlet air temperature.
Check heating mode inlet air temperature. _____ degrees F

d. Check heating mode outlet air temperature.
Check heating mode outlet air temperature. _____ degrees F

2. Certification: We the undersigned have witnessed the above functional performance tests and certify that the item tested has met the performance requirements in this section of the specifications.
Signature and Date

Contractor's Chief Quality Control Representative _____

Two Company Satellite Fire Station Fort Sill, OK

Contractor's Mechanical Representative _____

Contractor's Electrical Representative _____

Contractor's Testing, Adjusting and Balancing Representative _____

Contractor's Controls Representative _____

Contracting Officer's Representative _____

Using Agency's Representative _____

Functional Performance Test Checklist - HVAC Controls

For HVAC System: AHU-1 and AHU-2

The Contracting Officer will select HVAC control systems to undergo functional performance testing. The number of systems shall not exceed 2.

1. Functional Performance Test: Contractor shall verify operation of HVAC controls by performing the following tests:

a. Verify that controller is maintaining the set point by manually measuring the controlled variable with a thermometer.

b. Verify sensor/controller combination by manually measuring the controlled medium. Take readings from control panel display and compare readings taken manually. Record all readings.

Sensor _____
Manual measurement _____
Panel reading value _____

c. Verify system stability by changing the controller set point as follows:

(1) Air temperature - 10 degrees F

The control system shall be observed for 10 minutes after the change in set point. Instability or excessive hunting will be unacceptable.

d. Verify interlock with other HVAC controls.

2. Verify that operation of control system conforms to that specified in the sequence of operation.

3. Certification: We the undersigned have witnessed the above functional performance tests and certify that the item tested has met the performance requirements in this section of the specifications.

Signature and Date

Contractor's Chief Quality Control Representative _____

Contractor's Mechanical Representative _____

Contractor's Electrical Representative _____

Contractor's Testing, Adjusting and Balancing Representative _____

Contractor's Controls Representative _____

Contractor's Officer's Representative _____

Functional Performance Test Checklist - HVAC Controls

For HVAC System: AHU-1 and AHU-1

Using Agency's Representative _____

-- End of Section --

SECTION 16262

AUTOMATIC TRANSFER SWITCH

PART 1 GENERAL

1.1 REFERENCES

The publications listed below form a part of this specification to the extent referenced. The publications are referred to in the text by basic designation only.

FEDERAL STANDARDS (FED-STD)

FED-STD 595	(Rev B) Colors

INSTITUTE OF ELECTRICAL AND ELECTRONICS ENGINEERS (IEEE)

IEEE C37.90.1	(1989) Surge Withstanding Capability (SWC) Test

MILITARY STANDARDS (MIL-STD)

MIL-STD 461	(Rev C; Notice 2) Electromagnetic Emission and Susceptibility Requirements for the Control of Electromagnetic Interference
MIL-STD 462	(Basic; Notice 6) Measurement of Electromagnetic Interference Characteristics

NATIONAL ELECTRICAL MANUFACTURERS ASSOCIATION (NEMA)

NEMA ICS 1	(1988; Rev 1 2) Industrial Controls and Systems
NEMA ICS 2	(1988; Rev 1) Industrial Control Devices, Controllers and Assemblies
NEMA ICS 4	(1983; R 1988) Terminal Blocks for Industrial Use
NEMA ICS 6	(1988; Rev 1) Enclosures for Industrial Control and Systems

NATIONAL FIRE PROTECTION ASSOCIATION (NFPA)

NFPA 70	(1996) National Electrical Code
NFPA 110	(1997) Emergency and Standby Power Systems

UNDERWRITERS LABORATORIES (UL)

UL 1008	(Mar 15, 1989, 4th Ed; Rev Mar 6, 1991) Automatic Transfer Switches

1.2 GENERAL REQUIREMENTS

1.2.1 Standard Product

Material and equipment shall be a standard product of a manufacturer regularly engaged in the manufacture of the product and shall essentially duplicate items that have been in satisfactory use for at least 2 years prior to bid opening. The experience use shall include applications of equipment and materials under similar circumstances and of the same design and rating as the switches specified. Equipment items shall be capable of being serviced by an organization that is, in the opinion of the Contracting Officer, reasonably convenient to the site.

1.2.2 Nameplates

Nameplates shall be made from a corrosion-resistant metal with not less than 1/4-inch tall raised or engraved characters. The nameplate shall be mounted to the front of the enclosure and shall comply with nameplate requirements covered by NEMA ICS 2.

1.3 SUBMITTALS

Government approval is required for submittals with a "GA" designation; submittals having an "FIO" designation are for information only. The following shall be submitted in accordance with Section 01300 SUBMITTAL DESCRIPTIONS:

SD-04 Drawings

Switches; GA.

A one-line diagram of each ATS assembly and elementary, or schematic and wiring, diagram of the unit. An interface equipment connection diagram showing all conduit and wiring between the ATS and and all other related equipment. Device and nameplate numbers and item numbers shown on the list of equipment and material shall appear on drawings wherever the item of equipment or material appears. The one-line diagram shall show interlocking provisions and cautionary notes, if any. Operating instructions shall be shown on the one-line diagram or separately, at the discretion of the Contractor. The manufacturer's approved operating instructions for the ATS shall be laminated in plastic and permanently secured to the cabinet where the operator can see them. The one-line and elementary or schematic diagram shall be laminated in plastic and permanently secured to the inside of the front enclosure door. Unless otherwise approved, the one-line and elementary or schematic diagrams shall appear on the same drawing.

SD-07 Schedules

Material, Equipment, and Fixture Lists; GA.

A complete list of equipment and material proposed, containing an adequate description of each separate item of equipment or material recommended.

SD-09 Reports

Tests; FIO.

Certified factory and field test reports, within 14 days following completion of the tests. Reports shall be certified and dated and shall demonstrate that the tests were successfully completed prior to shipment of the equipment.

SD-13 Certificates

Equipment and Materials; GA.

Evidence of a UL listing, or conformance with applicable NEMA standards. Certificates of compliance will be accepted as proof of compliance when equipment or materials are required to conform to UL standards or to be manufactured and/or tested by NEMA standards. Such certificates are not required if manufacturer's published data, submitted and approved, reflect a UL listing or conformance with applicable publications of NEMA. Proof of the listing by UL and conformance with the applicable publications, of NEMA do not relieve the Contractor of compliance with other provisions of these specifications.

Switching Equipment; GA.

Proof of listing by UL sufficient to demonstrate that the ATS conforms to the specified requirements except as otherwise specified. Modification to a former UL listed ATS model shall require written UL approval of the modification. A copy of the written UL approval for modifications shall be included with the certified test reports specified. In lieu of the proof of listing by UL, the Contractor may have identical tests required by UL 1008 and by NEMA ICS 2 performed by a nationally recognized independent testing laboratory. UL and NEMA or other certified test reports shall be included to demonstrate the sequence of laboratory testing and that the overload, endurance, and temperature rise tests were conducted in that specific sequence of tests. The certified test reports shall show the date, times and duration of the overload, endurance, and temperature tests, and that the unit under test was not de-energized during the test sequence. Other tests shall be conducted in the sequence shown in paragraph TESTING unless otherwise justified and approved. The certified test reports from the testing laboratory shall be signed by the person performing the test and an authorized representative of the testing laboratory. The report shall verify that the ATS was tested in accordance with procedures described in UL 1008, or as otherwise specified and are of the same model number and ampacity as the switches specified. The test report shall verify that the tested unit passed all tests without modification or repair during a test period of not more than 90 days.

Operation and Maintenance Manuals

Switching Equipment; FIO.

Six complete copies of operating manual outlining the step-by-step procedures required for system startup, operation and shutdown. The manuals shall include the manufacturer's name, model number, service manual, parts list, and brief description of all equipment and basic operating features. The manufacturer's spare parts data shall be included in the instruction manuals and correlated with the respective item of equipment included as a component part of the switch assembly. Spare parts data shall include the recommended spare parts published by the manufacturer of the equipment. The source of supply and the curent cost of recommended spare parts shall be indicated. Six complete copies of maintenance manual listing routine maintenance, possible breakdowns, repairs and troubleshooting guide. The manuals shall include simplified wiring and control diagrams for the system as installed.

PART 2 PRODUCTS

2.1 AUTOMATIC TRANSFER SWITCH (ATS)

ATS shall be the electrically-operated type that is mechanically held in both operating positions. ATS shall be suitable for use in emergency systems described in NFPA 70. ATS shall be UL listed unless the Contractor retains a nationally recognized independent testing laboratory to conduct tests as specified in paragraph SUBMITTALS, and test reports are approved as being equivalent of test results and certified test reports as those determined and reported by UL. ATS shall be the electrically-operated contactor type which shall be manufactured and tested in accordance with applicable requirements of IEEE C37.90.1, MIL-STD 461, MIL-STD 462, NEMA ICS 1, NEMA ICS 2, and UL 1008. ATS shall also conform to NFPA 110 except that the ATS shall not be equipped with either overload or fault current protective devices. ATS shall be designed and manufactured to prevent stops in an intermediate or neutral position during transfer by the use of electrical actuators and stored-energy mechanisms. ATS designed and manufactured to effect transfers by a walking-beam or a similar device to engage handles of circuit breakers to accomplish transfer between power sources are unacceptable. Each pole of the doublethrow ATS shall have separate arcing contacts of a nonwelding type with switch contacts installed to permit viewing of the contacts without disassembly of the ATS

or removal of the entire contact enclosure, or component parts of the ATS. ATS shall be rated for continuous duty at the continuous current rating specified. All rating data shall be shown on detail drawings, and shall equal or exceed those specified.

a. Voltage: 120/208 Volts ac

b. Number of Phases: Three Phase

c. Number of Wires: Four

d. Frequency: 60 Hz.

e. Number of Switched Poles: Three.

f. Type of Load: Total system load shown.

g. Continuous Phase or Main Current Rating: Equal to or exceed the rating shown but, in no case, less than 125 percent of the full load rating of the emergency power source.

h. Nonwelding of Contacts: Rated for nonwelding of contacts when used with the feeder overcurrent devices indicated on the drawings and with the available fault current.

k. Main and neutral Contacts: Contacts shall have a silver composition and shall be protected by approved arcing contacts.

2.1.1 Override Time Delay

Time delay to override monitored source deviation shall be adjustable from 0.5 to 5 seconds and factory set at 1 second. The device shall detect and respond to a sustained voltage drop of 30 percent of nominal voltage between any two of the preferred supply conductors and initiate transfer action to the emergency source and start the engine-driven generator set after the set time period. The pickup voltage shall be adjustable between 85 and 100 percent of nominal and factory set 90 percent. The dropout voltage shall be adjustable from 75 to 98 percent of the pickup value, and factory set at 80 percent of nominal voltage.

2.1.2 Transfer Time Delay

Time delay before transfer to the emergency power source shall be adjustable from 0 to 5 minutes and factory set at 0 minutes. The device shall monitor the frequency and voltage of the emergency power source and transfer when frequency and voltage is stabilized at or above 90 percent of rated values. The pickup voltage shall be adjustable from 85 to 100 percent of nominal, and factory set at 90 percent. The pickup frequency shall be adjustable from 90 to 100 percent of nominal and factory set at 90 percent.

2.1.3 Return Time Delay

Time delay before return transfer to the normal power source shall be adjustable from 0 to 5 minutes and factory set at 5 minutes. The time delay shall be automatically defeated upon loss or sustained undervoltage of the emergency power source, provided that the normal supply has been restored.

2.1.4 Auxiliary Contacts

Two normally open and two normally closed auxiliary switches shall operate when the transfer switch is connected to the normal power source, and two normally open and two normally closed switches shall operate when the transfer switch is connected to the emergency power source.

2.1.5 Operator

A manual operator, conforming to the applicable provisions of UL 1008, shall be provided to permit manual operation of the ATS without opening the ATS enclosure, and incorporate features to prevent operation by other than authorized and qualified personnel. The ATS shall be designed for use of the manual operator under no load conditions in the usual instances, but with the capability of operation under load conditions when necessary.

2.1.6 Green Indicating Lights

A green indicating light shall supervise the normal power source and shall have a nameplate engraved NORMAL.

2.1.7 Red Indicating Lights

A red indicating light shall supervise the emergency power source and shall have a nameplate engraved EMERGENCY.

2.2 ENCLOSURE

ATS and accessories shall be in a free-standing and unventilated NEMA ICS 6, Type 3R, smooth sheet metal enclosure constructed in accordance with UL 1008. Gauge of the metal shall be not less than No. 14. Doors shall have suitable hinges, locking handle latch, and gasketed jambs. Enclosure shall be equipped with at least two approved size and type of grounding lugs for the purpose of grounding the enclosure using No. 4 AWG copper conductors to the facility ground system. Factory wiring within the enclosure and the Contractor's field wiring terminating within the enclosure shall comply with NFPA 70. If wiring is not color coded, wires shall be permanently tagged near the terminal at each end with the wire number shown on approved detail drawings. Terminal blocks shall conform to NEMA ICS 4. Terminal facilities shall be suitably arranged for entrance of external conductors from the bottom of the enclosure. Main switch terminals, including the neutral terminal, shall be of the pressure type and suitable for the termination of the external copper conductors shown.

2.2.1 Construction

Enclosure shall be constructed for convenient removal and replacement of contacts, coils, springs and control devices from the front without the disconnection of external power conductors or the removal or disassembly of major components.

2.2.2 Cleaning and Painting

Ferrous surfaces shall be cleaned and painted. Surfaces to be painted shall be free of all oil, grease, welding slag and spatter, mill scale, deleterious corrosion, dirt and other foreign substances. Painting shall include at least one coat of rust-inhibiting primer and one coat of finish enamel. The rust-inhibiting primer shall be applied to a clean, dry surface as soon as practicable after cleaning. Painting shall be manufacturer's standard material and process except that the total dry film thickness shall be not less than 2.5 mils. Color of the finish coat shall be Del Paint #25A-1A Chocolate Chip. The finish shall be free from runs, sags, peelings or other defects.

2.3 TESTING

2.3.1 Laboratory Testing

Testing shall be completed on the ATS to be supplied under these specifications, or shall have been completed on a previous, randomly selected standard production ATS unit having the same model number and capacity as the ATS specified. Overload, endurance and temperature tests shall be conducted in that sequence and within the shortest practicable

period of time on the same ATS without de-energization of that ATS under test. The test sequence for the ATS listed below shall be followed. No deviation will be granted that is less stringent. Approval will not be granted to deviate from the overload, endurance and temperature test sequence.

a. General

b. Normal Operation

c. Overvoltage

d. Undervoltage

e. Overload

f. Endurance

g. Temperature rise

h. Dielectric Voltage - Withstand

i. Contact Opening

j. Dielectric Voltage - Withstand (Repeated)

k. Withstand

l. Instrumentation and Calibration of High Capacity Circuits

m. Closings

n. Dielectric Voltage - Withstand (Repeated)

o. Strength of Insulating Base and Support

2.3.2 Factory Testing

In addition to other factory tests, each completely assembled ATS unit shall be subjected to dielectric and operational tests, and tests described in MIL-STD 462 to demonstrate compliance with conducted and radiation limits established in MIL-STD 461 for Commercial Electrical and Electromechanical Equipment (Class C3).

2.3.2.1 Dielectric Tests

Tests shall be performed in accordance with NEMA ICS 1. Wiring of each control panel shall be subjected to voltage surge tests as stipulated in IEEE C37.90.1. Impulse withstand rating tests shall be performed in accordance with the requirements of NEMA ICS 1.

2.3.2.2 Operational Tests

Tests shall be performed and shall demonstrate that the operational sequence of each ATS unit conforms to the requirements of the specifications with regard to operating transfer time, voltage, frequency, and timing intervals.

PART 3 EXECUTION

3.1 INSTALLATION

The ATS shall be installed as indicated and in accordance with approved manufacturer's instructions.

3.2 OPERATIONAL TESTING

Following completion of the installation of the ATS, the Contractor shall perform operational tests in accordance with the written instructions of the manufacturer after having made proper adjustments and settings to demonstrate that the ATS functions satisfactorily and as specified. The Contractor shall advise the Contracting Officer not less than 5 work days prior to the scheduled date or dates for operational testing, and shall provide certified field test reports to the Contracting Officer within 2 calendar weeks following successful completion of the operational tests. The test reports shall describe all adjustments and settings made and all operational tests performed.

-- End of Section --

SECTION 16264

NATURAL GAS-GENERATOR SET

PART 1 GENERAL

1.1 REFERENCES

The publications listed below form a part of this specification to the extent referenced. The publications are referred to in the text by basic designation only.

AMERICAN NATIONAL STANDARDS INSTITUTE (ANSI)

ANSI C12.11	(1987) Instrument Transformers for Revenue Metering, 10 kV BIL through 350 kV BIL (0.6 kV NSV through 69 kV NSV)
ANSI C2	(1996) National Electrical Safety Code
ANSI C39.1	(1981) Electrical Analog Indicating Instruments

AMERICAN SOCIETY FOR TESTING AND MATERIALS (ASTM)

ASTM A 53	(1989a) Pipe, Steel, Black and Hot-Dipped, Zinc-Coated Welded and Seamless
ASTM A 106	(1989) Seamless Carbon Steel Pipe for High-Temperature Service
ASTM A 135	(1988) Electric-Resistance-Welded Steel Pipe
ASTM A 181	(1987) Forgings, Carbon Steel, for General-Purpose Piping
ASTM A 234	(1989a) Piping Fittings of Wrought Carbon Steel and Alloy Steel for Moderate and Elevated Temperatures

AMERICAN SOCIETY OF MECHANICAL ENGINEERS (ASME)

ASME B16.3	(1985) Malleable Iron Threaded Fittings, Classes 150 and 300
ASME B16.5	(1988; Errata) Pipe Flanges and Flanged Fittings
ASME B16.11	(1980) Forged Steel Fittings, Socket-Welding and Threaded

MANUFACTURERS STANDARDIZATION SOCIETY OF THE VALVE AND FITTINGS INDUSTRY (MSS)

MSS SP-80	(1987) Bronze Gate, Globe, Angle and Check Valves

MILITARY STANDARDS (MIL-STD)

MIL-STD 461	(Rev C; Notice 1) Electromagnetic Emission and Susceptibility Requirements for the Control of Electromagnetic Interference

MIL-STD 705	(Rev C) Generator Sets, Engine Driven Methods of Tests and Instructions

NATIONAL ELECTRICAL MANUFACTURERS ASSOCIATION (NEMA)

NEMA AB 1	(1986; Rev 1) Molded Case Circuit Breakers and Molded Case Switches
NEMA ICS 6	(1988; Rev 1) Enclosures for Industrial Control and Systems
NEMA MG 1	(1987; Rev 1) Motors and Generators
NEMA MG 2	(1989) Safety Standard for Construction Installation and Guide for Selection, Installation and Use of Electric Motors and Generators
NEMA SG 3	(1981) Low-Voltage Power Circuit Breakers

NATIONAL FIRE PROTECTION ASSOCIATION (NFPA)

NFPA 30	(1987) Flammable and Combustible Liquids
NFPA 37	(1997) Installation and Use of Stationary Combustion Engines and Gas Turbines
NFPA 70	(1996) National Electrical Code

SOCIETY OF AUTOMOTIVE ENGINEERS (SAE)

SAE ARP 892	(Nov 1965) DC Starter-Generator, Engine
SAE J537	(Jun 1986) Storage Batteries

UNDERWRITERS LABORATORIES (UL)

UL 489	(Sep 15, 1986; 7th Ed; Rev thru Oct 24, 1990) Molded-Case Circuit Breakers and Circuit-Breaker Enclosures
UL 1236	(Dec 23, 1986; 3rd Ed; Rev thru Apr 6, 1990) Battery Chargers

1.2 SYSTEM DESCRIPTION

The engine-generator set shall be provided and installed complete and totally functional, with all necessary ancillary equipment to include air filtration, starting system, generator protection and isolation, instrumentation, lubrication, fuel system, cooling system, engine exhaust. Engine-generator set ratings shall be as follows:

Number of Sets	1
Rating	Standby
Fuel Type	Natural Gas
Output	8 Kw
Power factor, lagging	0.8
Maximum speed	1800 rpm

Frequency	60 Hz
Voltage	120/208
Phase	3 phase/4 wire
Overload capacity	110 percent of rated load for 1 hour in 12 consecutive hours
Type of excitation	Brushless
Maximum time to start	8 seconds (with a load equal to the maximum step load increase)
Elevation of installation	1120 feet above sea level
Maximum summer outdoor temperature	110 degrees F
Minimum winter outdoor temperature	-10 degrees F
Engine Cooling type	water - cooled
Area Type	Residential
Seismic Zone	1
Maximum Step Load Increase	100 percent rated capacity
Maximum Step Load Decrease	100 percent of rated capacity
Transient Loading Recovery Time	2 seconds

1.3 GENERAL REQUIREMENTS

1.3.1 Engine-Generator Set

Each set shall consist of one engine, one generator, and one exciter mounted, assembled, and aligned on one base; and all other necessary ancillary equipment. Sets shall be assembled and attached to the base prior to shipping. Each set shall be fully weatherproof, corrosion resistant, and provided in a fully weather resistant enclosure inclusive. All set components shall be environmentally suitable for the locations shown and shall be the manufacturer's standard product offered in catalogs for commercial or industrial use. Any non-standard products or components and the reason for their use shall be specifically identified in paragraph SUBMITTALS.

1.3.2 Nameplates

Each major component of this specification shall have the manufacturer's name, address, type or style, model or serial number and catalog number on a plate secured to the equipment. As a minimum nameplates shall be provided for:

Engines
- Battery charger
- Generators
- Relays
- Exciters
- Transformers (CT/PT)

Regulators
Radiators
Governors
Heaters
Exhaust mufflers
Exhaust silencers
Battery

1.3.3 Personnel Safety Devices

Exposed moving parts, parts that produce high operating temperatures, parts which may be electrically energized, and parts that may be a hazard to operating personnel shall be insulated, fully enclosed, guarded, or fitted with other types of safety devices. The safety devices shall be installed so that proper operation of the equipment is not impaired.

1.3.4 Verification of Dimensions

The premises shall be visited and all details of the work verified. The Contracting Officer shall be advised in paragraph SUBMITTALS of any discrepancies before performing any work.

1.3.5 Conformance to Codes and Standards

Where equipment is specified to conform to requirements of any code or standard such as the UL, etc., the design, fabrication and installation shall all conform to the code.

1.3.6 Welding

Welding and non-destructive testing procedures are specified in Section 15052 WELDING PRESSURE PIPING.

1.4 SUBMITTALS

Government approval is required for submittals with a "GA" designation; submittals having an "FIO" designation are for information only. The following shall be submitted in accordance with Section 01300 SUBMITTAL DESCRIPTIONS:

SD-01 Data

Welding; FIO

A copy of qualifying procedures and a list of names and identification symbols of qualified welders and welding operators.

Natural Gas Generator Set; GA.

A letter which certifies that the engine-generator set and cooling system function properly in the ambient temperatures specified, and provides the following data:

a. The maximum allowable inlet temperature of the cooling air.

b. The minimum allowable inlet temperature of the cooling air.

c. The maximum allowable temperature rise in the coolant through the engine.

d. The magnitude of monitored values which define alarm or action setpoints, and the tolerance (plus and/or minus) at which the device activates the alarm or action.

e. The minimum allowable inlet fuel temperature.

f. The generator kW rating and short circuit current capacity (both symmetric and asymmetric).

Manufacturer's Catalog Data; GA.

Manufacturer's standard catalog data describing and depicting each engine-generator set and all ancillary equipment in sufficient detail to demonstrate specification compliance.

Spare Parts; FIO.

A complete list of spare parts for each piece of equipment and a complete list of materials and supplies needed for continued operation. Lists shall include 2 supply sources and their current prices. Each list shall be separated into 2 parts, those elements recommended by the manufacturer to be replaced after 3 years of service, and the remaining elements.

Battery Charger; GA.

Battery charger sizing calculations.

SD-04 Drawings

Layout and Shop Drawings; GA.

a. Base-mounted equipment, complete with base and all attachments including anchor bolt template and recommended clearances for maintenance and operation.

b. Complete starting system.

c. Complete fuel system.

d. Complete cooling system.

e. Complete exhaust system.

f. Electric wiring of relays, breakers, switchgear, and switches including single line and wiring diagrams with written descriptions of sequence of operation and of the instrumentation provided.

g. Lubrication system, complete including piping, pumps, strainers, filters, heat controls and wiring.

h. Location, type, and description of vibration isolation devices.

i. The safety system together with a detailed description of how it is to work, including wiring schematics; safety devices with a listing of their normal ranges; and alarm and shutdown values to include operation parameters such as pressures, temperatures, voltages, currents, and speeds.

j. One-line schematic and wiring diagrams of the generator, exciter, regulator, governor, and all instrumentation.

k. Each panel layout.

l. Mounting and support for each panel and major piece of electrical equipment.

m. Engine-generator set rigging points and lifting instructions.

As-Built Drawings; GA.

Drawings which accurately depict the as-built configuration of the installation, upon acceptance of the natural gas-generator set installation.

SD-06 Instructions

Posted Instructions; FIO.

A complete set of posted instructions, including wiring and control diagrams showing the key mechanical and electrical control elements, and a complete layout of the entire system. Instructions shall be weatherproof, laminated in plastic, framed, and posted where directed by the Contracting Officer.

SD-08 Statements

General Qualifications; FIO.

Documentation to demonstrate that:

a. Each component manufacturer has a minimum of 3 years experience in the manufacture, assembly and sale of components used with stationary natural gas-engine generator sets for commercial and industrial use.

b. The engine-generator set manufacturer/assembler has a minimum of 3 years experience in the manufacture, assembly and sale of stationary natural gas engine-generator sets for commercial and industrial use.

c. The field engineer is qualified to perform the specified functions.

Factory Test; FIO.

A detailed description of the procedures for factory tests.

Onsite Inspections; GA.

A letter giving notice of the proposed dates of all onsite inspections.

Onsite Test; GA.

A detailed description of the Contractor's proposed procedures for onsite tests.

Installation Procedures; FIO.

A complete copy of the manufacturer's installation procedures. A detailed description of the manufacturer's recommended break-in procedure.

SD-09 Reports

Factory Inspections; FIO.

Six complete reproducible copies of the factory inspection results on the checklist format specified in paragraph Factory Inspection.

Onsite Tests; GA.

a. A letter giving notice of the proposed dates of all onsite inspections and tests.

b. A detailed description of the Contractor's procedures for onsite tests including the test plan and a listing of all equipment necessary to perform the tests.

c. Six copies of the onsite test data described below in 8-1/2" by 11-1/2" binders having a minimum of 5 rings from which material may readily be removed and replaced, including a separate section for each test. Sections shall be separated by heavy plastic dividers with tabs. Data plots shall be full size showing all grid lines, with full resolution.

(1) A detailed description of the procedures for onsite tests.

(2) A list of all equipment used, with calibration certifications.

(3) A copy of all measurements taken, with required plots and graphs.

(4) The date of testing.

(5) The parameters verified.

(6) The condition specified for the parameter.

(7) The test results, signed and dated.

(8) A description of all adjustments made.

SD-13 Certificates

Emissions; GA.

A certification from the engine manufacturer stating that the engine emissions meet federal, state, and local regulations and restrictions specified.

Regulatory Compliance; GA.

A regulatory compliance certification letter stating that where materials or equipment are specified to comply with requirements of UL, or other standards, written proof of such compliance has been obtained. The label or listing of the specified agency, or a written certificate from an approved, nationally recognized testing organization equipped to perform such services, stating that the items have been tested and conform to the requirements and testing methods of the specified agency are acceptable as proof.

SD-19 Operation and Maintenance Manuals

Operation Manual; GA.

Six copies of the operation manual in 8-1/2 by 11 inch binders, having a minimum of 5 rings from which material may be readily removed and replaced, including a separate section for each system or subsystem. Sections shall be separated by heavy plastic dividers with tabs which identify the material in the section. Drawings shall be folded blue lines, with the title block visible, and placed in 8-1/2 by 11 inch plastic pockets with reinforced holes. One full

size reproduceable mylar of each drawing shall accompany the booklets. Mylars shall be rolled and placed in a heavy cardboard tube with threaded caps on each end. The manual shall include step-by-step procedures for system startup, operation, and shutdown; drawings, diagrams, and single-line schematics to illustrate and define the electrical, mechanical, and hydraulic systems with their controls, alarms, and safety systems; the manufacturer's name, model number, and a description of all equipment in the system.

Maintenance Manual; GA.

Six copies of the maintenance manual containing the information described below in 8-1/2 by 11 inches binders having a minimum of 5 rings from which material may be readily removed and replaced, including a separate section for each item listed. Each section shall be separated by a heavy plastic divider. Drawings shall be folded, with the title block visible, and placed in plastic pockets with reinforced holes.

a. Procedures for each routine maintenance item.

b. Procedures for troubleshooting.

c. All factory service manuals, with parts lists.

d. A copy of the posted instructions.

1.5 STORAGE AND INSTALLATION

Proper protection of all material and equipment, before, during, and after installation is the Contractor's responsibility. All stored items shall be protected from the weather and contamination. During installation, piping and similar openings shall be capped to keep out dirt and other foreign matter.

PART 2 PRODUCTS

2.1 MATERIALS AND EQUIPMENT

Materials and equipment shall be as specified herein.

2.1.1 Battery

a. Starting: SAE J537

b. Charger: UL 1236.

2.1.2 Circuit Breakers, Low-Voltage

NEMA AB 1, UL 489, and NEMA SG 3.

2.1.3 Electrical Indicating Instruments, Analog

ANSI C39.1, semiflush.

2.1.4 Filter Elements (Lubricating-oil, and Combustion-air)

Manufacturer's Standard.

2.1.5 Generator and Exciter

NEMA MG 1 and NEMA MG 2.

2.1.6 Instrument Transformers

ANSI C12.11.

2.1.7 Pipe (Sleeves, Fuel, Lube-oil, Compressed-Air, Coolant and Exhaust)

ASTM A 53, or ASTM A 106 or ASTM A 135, steel pipe. Pipe smaller than 2 inches shall be Schedule 80. Pipe 2 inches and larger shall be Schedule 40.

2.1.8 Pipe Flanges and Fittings

a. Pipe Flanges and Flanged Fittings: ASTM A 181, Class 60, or ASME B16.5, Grade 1, Class 150.

b. Pipe Welding Fittings: ASTM A 234, Grade WPB or WPC, Class 150, or ASME B16.11, 3000 lb.

c. Threaded Fittings: ASME B16.3, Class 150.

d. Valves: MSS SP-80, Class 150.

e. Gaskets: Manufacturer's Standard.

2.1.9 Thermometer for Oil or Water Service

Flush-mounted dial with range to suit the service encountered and shall be standard with the manufacturer.

2.1.10 Electrical Enclosures

NEMA ICS 6, TYPE 3R

2.1.11 Pressure Gauges

Manufacturer's Standards.

2.1.12 Electric Motors

a. General: NEMA MG 1

b. Starting Motors: SAE ARP-892

2.2 ENGINE

2.2.1 Type

The engine shall operate on natural gas. It shall be designed for stationary applications and shall be complete with all ancillaries. It shall be a standard production model described in the manufacturer's catalog. It shall be naturally aspirated. It shall be four-cycle and compression-ignition type. It shall be vertical inline, V-, or opposed-piston type. It shall have a solid cast block or individually cast cylinders. It shall have a minimum of two cylinders and may have removable cylinder liners. Opposed-piston type engines shall have no less than 4 cylinders. Each block shall have a coolant drain port.

2.2.2 Transient Load Capability

The engine shall be capable of receiving and responding to a maximum step load change within a transient loading recovery time as specified in paragraph SYSTEM DESCRIPTION.

2.3 FUEL SYSTEM

The entire fuel system shall conform to the requirements of NFPA 37.

2.4 LUBRICATION

Each engine shall have a separate lube-oil system conforming to NFPA 30 and NFPA 37. Each system shall be pressurized by engine-driven oil pumps. The engine shall be furnished with a relief valve for oil pressure regulation and a dip-stick for oil level indications. The system shall be readily accessible for service such as draining, refilling, etc. Each system shall permit addition of oil and have oil-level indication with the set operating. The system shall utilize an oil cooler as recommended by the engine manufacturer.

2.4.1 Filtering

One full-flow strainer and one full-flow filter shall be provided for each pump. The strainer and filter shall be readily accessible and capable of being changed without disconnecting the piping or disturbing other components. The strainer shall be located on the suction side of each pumps. The filter shall be located on the discharge side of each pump. The strainer shall be metal-edge or screen type with maximum openings of 0.027 inch (24 mesh). The strainer and filter shall have inlet and outlet connections plainly marked. An indicating differential pressure gauge shall be provided across the filter.

2.4.2 Lube-Oil Sensors

Each engine shall be equipped with both an entering and leaving lube-oil temperature gauge.

2.5 COOLING

Each engine shall have its own cooling system. Each system shall operate fully automatic while the engine is running. The cooling system coolant shall use a combination of water and ethylene-glycol sufficient for freeze protection at the minimum winter outdoor temperature in paragraph SYSTEM DESCRIPTION and its subparagraphs. The maximum temperature rise of the coolant across the engine shall be no more than that recommended and submitted in paragraph SUBMITTALS.

2.5.1 Coolant Pumps

All coolant pumps shall be the centrifugal type. Each engine shall have an engine-driven primary pump. All secondary pumps shall be electric motor driven and have automatic controllers.

2.5.2 Radiator

The radiator shall be of a size and capacity to limit the maximum allowable temperature rise in the coolant, across the engine, to that recommended and submitted in paragraph SUBMITTALS for the maximum summer outdoor design temperature and site elevation. The radiator shall be constructed of corrosion resistant metals. The radiator shall be pressure type incorporating a pressure valve, vacuum valve and a radiator cap. The radiator cap shall be designed for pressure relief prior to removal. The radiator and the entire cooling system shall be capable of withstanding a minimum pressure of 7 psig. The radiator shall be protected with a strong grille or screen guard. The radiator shall have at least two tapped holes. One tapped hole in the radiator shall be equipped with a drain cock, the rest shall be plugged.

2.6 SPECIAL LIMITATIONS

2.6.1 Electromagnetic Compatibility

MIL-STD 461, Radio Interference Suppression.

2.6.2 Sound Limitations

Sound emitted from any generator-set component shall be within the following limitations:

Frequency Band (Hz)	Sound Levels (Decibels)
20-75	81
75-150	71
150-300	64
300-600	58
600-1,200	55
1,200-2,400	54
2,400-4,800	54
4,800-10 kHz	56

2.7 AIR INTAKE FILTER AND SILENCER

Filters and silencers shall be provided in locations that are convenient for servicing. The silencer shall be of the high frequency filter type, located in the air intake system as recommended by the engine manufacturer. Silencer shall be capable of reducing the noise level at the air intake to a point below the maximum acceptable levels specified in paragraph Sound Limitations. A combined filter-silencer unit meeting requirements for the separate filter and silencer items may be provided. Expansion elements in air-intake lines shall be copper.

2.8 EXHAUST SYSTEM

The system shall be separate and complete for each engine. Piping shall be supported so as to minimize vibration. Where a V-type engine is provided, a V-type connector, with all necessary flexible sections and hardware, shall connect the engine exhaust outlets.

2.8.1 Flexible Sections and Expansion Joints

Provide a flexible section at engine and an expansion joint at muffler. Flexible sections and expansion joints shall have flanged connections. Flexible sections shall be made of convoluted seamless tube without joints or packing. Expansion joints shall be the bellows type. Expansion and flexible elements shall be stainless steel suitable for natural gas-engine exhaust gas at 1000 degrees F. Expansion and flexible elements shall be capable of absorbing vibration from the engine and compensation for thermal expansion and contraction.

2.8.2 Exhaust Muffler

Provide a chamber type exhaust muffler. It shall be of welded steel and designed for outside horizontal mounting. Eyebolts, lugs, flanges, or other items shall be provided as necessary for support in the location and position indicated. Pressure drop through the muffler shall not exceed the recommendations of the engine manufacturer. Outside mufflers shall be zinc coated or painted with high temperature resisting paint. The muffler shall be capable of reducing the noise level to a point below the maximum acceptable

area type levels specified in paragraph Sound Limitations, at a distance of 75 feet under 110 percent of full load and clear weather.

2.8.3 Exhaust Piping

All sections of exhaust piping shall be sloped downward away from the engine to a condensate trap and drain valve. Changes in direction shall be long-radius.

2.9 EMISSIONS

The finished installation shall comply with all Federal and local regulations and restrictions regarding the limits of emissions.

2.10 STARTING SYSTEM

2.10.1 General

The starting system shall be electric and arranged for manual starting from the engine panel and fully automatic starting upon the failure of any phase of the normal power supply with a light on the engine panel that will be activated during all starting attempts. An engine start-stop switch shall be provided with functions including reset, run/start, stop and automatic mode. Start-stop logic shall be provided with the system with provisions for adjustable cycle cranking and cool down operation. It shall be arranged for manual starting and fully automatic starting upon the failure of any phase of the normal power supply. The system shall be capable of providing a minimum of 4 cranking periods with 2-minute intervals between cranks. Each cranking period shall have a maximum duration of 30 seconds.

2.10.2 Electrical

An electrical starting system shall be provided to operate on a 12 or a 24-volt dc system utilizing a negative circuit ground. The electrical starting system shall be provided with a adjustable cranking limit device to limit cranking periods from 10 seconds up to the maximum duration. It shall be of sufficient capacity, at the maximum outdoor summer temperature specified in paragraph Engine-Generator Set Rating, to crank the engine without damage or overheating. All components shall be sized to withstand the seismic acceleration forces of the zone specified in paragraph Engine-Generator Set Ratings.

2.10.2.1 Battery

A starting battery system shall be provided and shall include the battery, battery rack, intercell connectors, spacers, automatic battery charger with overcurrent protection, metering and relaying. All critical system components (rack, protection, etc.) shall be sized to withstand the seismic acceleration forces of the zone specified in paragraph SYSTEM DESCRIPTION and its subparagraphs. The battery shall be the lead-acid type, with sufficient capacity, at the minimum outdoor winter temperature specified in paragraph SYSTEM DESCRIPTION and its subparagraphs to provide the specified cranking periods. Battery and all associated equipment shall be unit mounted as an integral part of the generator package.

2.10.2.2 Battery Charger

A current-limiting battery charger shall be provided and shall automatically recharge the batteries. The charger shall be capable of an equalize charging rate for recharging fully depleted batteries within 8 hours and a floating charge rate for maintaining the

batteries in prime starting condition. An ammeter shall be provided to indicate charging rate. A timer shall be provided for the equalize charging rate setting. The battery charger shall be unit mounted as an integral part of the generator package.

2.10.3 Exerciser

A manually actuated device shall be provided to start, operate and automatically stop the engine after 15 minutes to permit periodic operation of the engine-generator set.

2.11 SAFETY SYSTEM

All devices, wiring, panels, etc., shall be provided and installed as a complete system to automatically activate the appropriate signals and initiate the appropriate actions. The safety system shall be provided with a self test method to verify its operability. All alarm signals shall have manual acknowledgment and reset devices. The alarm signal systems shall reactivate for new signals after acknowledgment is given to any signal. The systems shall be configured such that loss of any monitoring device shall be dealt with as an alarm on that system element.

2.11.1 Visual Signal

The visual alarm signal shall be a panel light. The light shall be normally off, activated to be continuously lit upon alarm, and changed to blinking upon acknowledgment. If automatic shutdown occurs the display shall maintain activated status to indicate the cause of failure.

2.11.2 Alarms and Action Logic

2.11.2.1 Shutdown

Simultaneous activation of the audible signal, activation of the visual signal, stopping the engine, and opening the generator circuit breakers shall be accomplished.

2.11.2.2 Problem

Activation of the visual signal shall be accomplished.

2.11.3 Alarm Setpoints

The magnitude of all monitored values which define an alarm shall be as stated in the paragraph SUBMITTALS. The following shall be utilized only if more stringent than the submitted values:

a. Overspeed (110 percent of rated speed)

b. Over/Under frequency (plus or minus 0.5 Hz.)

c. Pre-high lubricating oil temperature (10 degrees F before shutdown)

d. Pre-high coolant fluid outlet temperature (10 degrees F lower than high coolant fluid outlet temperature)

2.11.4 Alarm Panel

The panel shall be as specified in paragraph PANELS and shall contain the following items:

	Condition	Alarm
a.	Activation of the manual emergency stop switch	Shutdown
b.	Engine Overspeed	Shutdown
c.	High-lubricating oil temperature	Shutdown
d.	Low-lubricating oil pressure	Shutdown
e.	High coolant fluid outlet temperature	Shutdown
f.	High lubricating oil level	Problem
g.	Pre-High coolant fluid outlet temperature	Problem
h.	Pre-High-lubricating oil temperature	Problem
i.	Low voltage of the starting battery	Problem
j.	Failure to start within the specified time	Problem
k.	Low coolant fluid outlet temperature	Problem
l.	Over/Under frequency	Problem
m.	Generator breaker tripped position indication	Problem

2.11.5 Time-Delay on Alarms

For startup of the engine-generator set, time-delay devices shall be installed bypassing the low-lubricating oil pressure alarm during cranking, and the low coolant fluid outlet temperature alarm. The lube-oil time-delay device shall return its alarm to normal status after the engine starts. The coolant time-delay device shall return its alarm to normal status 5 minutes after the engine starts.

2.12 GOVERNOR

A droop governor with a maximum frequency droop of 3 percent of rated frequency over a load range from 0 to 100 percent of rated load shall be provided. It shall be the electrical-hydraulic type with electrical speed sensing and a bandwidth of 3 percent of rated frequency. It shall be configured for safe manual adjustment during operation of the engine-generator set of the frequency setting without special tools, from 90 to 110 percent of the rated frequency.

2.12.1 Steady State Performance

The governor shall automatically maintain the generator output frequency within the specified bandwidth.

2.12.2 Transient Performance

The governor shall cause the engine-generator set to respond to a maximum step load change within the transient loading recovery time as specified in paragraph SYSTEM DESCRIPTION, to limit the maximum frequency variation to 5 percent of rated frequency in stand-alone service.

2.13 ENGINE PANEL

The panel shall be as specified in paragraph PANELS and shall contain the following items:

a. Coolant Fluid inlet temperature display

b. Coolant Fluid outlet temperature display

c. Lubricating-oil pressure indicator

d. Lubricating-oil inlet temperature display

e. Lubricating-oil outlet temperature display

f. Red Emergency Stop (push-button or switch)

g. Run time meter

h. Fuel header pressure display

i. Tachometer display

j. Engine start-stop switch

k. Start attempt light indicator

l. Pyrometer display with selector switch

m. Alarm Panel

2.14 GENERATOR

2.14.1 General

The generator shall be one or two bearing, engine-driven synchronous type directly connected to the engine and shall conform to NEMA MG 1. Frame shall be drip-proof type. Bearings shall be of the sleeve, sealed-ball or spherical roller type. Insulation shall be Class H or Class F, and shall have a resistance of at least 1 megohm per 1000 volts of nominal operating voltage, at 40 degrees C. Rating shall be as in paragraph Engine-Generator Set Rating, with a temperature rise as permitted in NEMA MG 1. Resistance method shall be used for determining temperature rise rating. The generator shall be equipped with an amortisseur winding. All generator phase leads shall be brought out to a terminal box. The telephone influence factor shall not exceed the limits of balanced TIF established by NEMA MG 1. A suitable generator-field discharge resistor shall be provided, if required by the generator manufacturer. Design shall be such as to protect against mechanical, electrical and thermal damage due to vibration, 25 percent over-speed, or voltages and temperatures at 10 percent over-load. Machine balance of the generator shall comply with NEMA MG 1, Part 20. The generator and all ancillary equipment shall meet the short circuit requirements of NEMA MG 1.

2.14.2 Current Balance

At 100 percent rated load, and load impedance equal for each of the three phases, the permissible current difference between any two phases shall not exceed 2 percent of the largest current on either of the two phases.

2.14.3 Voltage Balance

At any balanced load between 75 and 100 percent of rated load, the difference in line-to-neutral voltage among the three phases shall not exceed 1 percent of the average line-to-neutral voltage. For a single-phase load condition, consisting of 25 percent load at unity power factor placed between any phase and neutral with no load on the other two phases, the maximum simultaneous difference in line-to-neutral voltage between the phases shall not exceed 3 percent of rated line to neutral voltage. The single-phase load requirement shall be valid utilizing normal exciter and regulator control. The interpretation of the 25 percent load for single phase load conditions means 25 percent of the 100 percent 3 phase Kw capacity of the generator.

2.14.4 Waveform

The deviation factor of the line-to-line voltage at zero load and at balanced full rated load at 0.80 power factor shall not exceed 10 percent. The RMS of all harmonics shall be less than 5.0 percent and that of any one harmonic less than 3.0 percent at full rated load.

2.15 EXCITER

The generator exciter shall be of the brushless or permanent magnet type. Semiconductor rectifiers shall have a minimum safety factor of 300 percent for peak inverse voltage and forward current ratings for all operating conditions, including 110 percent generator output at 4O degrees C ambient. The exciter and regulator in combination shall maintain generator-output voltage within the limits specified.

2.16 VOLTAGE REGULATOR

A solid state type voltage regulator, separate from the exciter, with a maximum droop of 3 percent of rated voltage over a load range from 0 to 100 percent of rated load shall be provided. The regulator shall have an operational bandwidth of 2 percent of rated voltage. The regulator shall be configured for safe manual adjustment of the engine-generator voltage output without special tools, during operation, from 90 to 110 percent of the rated voltage. Regulation drift shall not exceed plus or minus 1/2 percent for an ambient temperature change of 20 degrees C.

2.16.1 Steady State Performance

The voltage regulator shall automatically maintain the generator output voltage within the specified operational bandwidth.

2.16.2 Transient Voltage Performance

The voltage regulator shall cause the engine-generator set to respond to a maximum step load change within the transient loading recovery time as specified in paragraph SYSTEM DESCRIPTION, to limit the maximum voltage variation to 5 percent of rated voltage.

2.17 GENERATOR CONTROL AND PROTECTION

A 600 volt rated circuit breaker to provide short circuit and overload protection for the generator shall be provided. Molded case circuit breakers shall have a minimum interrupting rating not less than 20,000 amperes at rated voltage and frequency. Equipment shall be ground fault protected. All breaker ratings shall be at the generator rated voltage and frequency. The breaker shall be housed in an engine generator base mounted type enclosure.

2.17.1 Automatic Transfer Switch

Automatic transfer switch shall be in accordance with Section 16262 AUTOMATIC TRANSFER SWITCHES.

2.18 GENERATOR PANEL

The panel shall be as specified in paragraph PANELS and shall contain the following items:

a. Totalizing Kilowatt-hour meter

b. Recording Kilowatt-hour/demand meter

c. Voltage regulator control

d. Exciter field control

e. Ammeter, three-phase, with four-position selector switch

f. Generator field ammeter and shunt

g. Generator field contactor or circuit breaker and discharge resistor.

h. Indicating wattmeter

2.19 PANELS

All instruments shall be calibrated using recognized industry calibration standards. Panels shall be attached to the base by vibration/shock absorbing type mountings. Panels shall be mounted in the generator enclosure, or exciter-regulator cabinet. Instruments shall be mounted flush or semiflush. Convenient access to the back of all panels shall be provided to facilitate maintenance.

2.19.1 Standard

Each panel shall be of the type and kind necessary to provide all specified functions. Analog electrical indicating instruments shall be in accordance with ANSI C39.1, semiflush.

2.19.2 Electronic

Each panel shall be 100 percent solid state, state of the art, microprocessor controlled to provide all specified functions. All control, logic, and function devices shall be compatible as a system, sealed, dust and water tight, utilize modular components with metal housings and digital instrumentation. Data display shall utilize LED or back-lit LCD. Numeral height shall be 13mm.

2.19.2.1 AC Output Metering Devices

The metering devices shall have an accuracy of not less than 0.5 percent throughout a temperature range of minus 40 plus 70 degrees C. Distorted generator output voltage waveform of a crest factor less than 5 shall not affect metering accuracy for phase voltages, hertz and amps.

2.19.2.2 Displays

Provide continuous indication of the tachometer, lubricating-oil pressure, AC voltmeter, AC ammeter, Frequency meter, and all safety system parameters. A momentary switch shall be provided to initiate sequential display of all other parameters specified for all other

panels. Additionally, the display shall provide indication of cycle programming and diagnostic codes for troubleshooting.

2.19.2.3 Interface Module

An interface module shall be provided to decode serial link data from the electronic panel and translate alarm, fault and status conditions to a set of relay contacts.

2.20 AUTOMATIC ENGINE-GENERATOR SET SYSTEM OPERATION

Engine-generator sets shall be provided with all relays, devices, wiring, etc., necessary for fully automatic operation. All devices shall be in enclosures suitable for the environment. When the normal supply voltage in any phase drops below a voltage setpoint in the adjustable range from 65 to 90 percent normal, and after an override time delay of 3 seconds nominal, an automatic operation shall begin. The engine-generator set shall automatically start, accelerate to the governed speed and build up to the regulated voltage. When the generator voltage reaches approximately 90 percent normal, automatic transfer switching of the load from normal source to the generator shall occur. When the normal supply voltage is restored to the original setpoint for a time interval, adjustable from 5 to 30 minutes, the load shall be automatically switched from the engine-generator set to the normal supply and the engine-generator set shall automatically stop after a 5 minute no load run with all devices reset to normal position, ready to repeat the automatic operation.

2.21 MANUAL ENGINE-GENERATOR SET SYSTEM OPERATION

Complete facilities shall be provided for manual:

a. Control and testing of each set without load;

b. Loading and unloading of each set;

2.22 BASE

The base shall be constructed of structural steel. The base shall be designed to rigidly support the engine-generator set, ensure permanent alignment of all rotating parts, be arranged to provide easy access to allow changing of lube-oil, and ensure that alignment will be maintained during shipping and normal operation. The base shall permit skidding in any direction during installation and shall be provided with suitable holes for foundation bolts. It shall also withstand and mitigate the affects of synchronous vibration of the engine and generator.

2.24 THERMAL INSULATION

Thermal insulation shall be as specified in Section 15250 THERMAL INSULATION FOR MECHANICAL SYSTEMS.

2.25 PAINTING AND FINISHING

The engine-generator set shall be cleaned, primed and painted Del Paint #25A-1A Chocolate Chip.

PART 3 EXECUTION

3.1 PIPING INSTALLATION

3.1.1 General

Flanged fittings shall be utilized to allow for complete dismantling and removal of each piping system from the facility without disconnecting or removing any portion of any other system's equipment or piping. Connections to all equipment shall be made with flexible connectors. Changes in direction shall be made with fittings. All bending of pipe shall be done with pipe benders and no malformation shall be visible on bent pipe. Pipes extending through the roof shall be properly flashed. Piping shall be installed clear of all windows, doors, and openings; shall permit thermal expansion and contraction without damage to joints or hangers; and shall include a 1/2-inch drain valve at each low point.

3.1.2 Flanged Joints

Flanges shall be 15-pound type, drilled, and of the proper size and configuration to match the exhaust outlet of the engine. Flanged joints shall be gasketed and made up square and tight. Gaskets shall be factory cut in one piece 1/16-inch thick.

3.1.3 Cleaning

After fabrication and before assembly all piping interiors shall be manually wiped clean of all debris.

3.2 ELECTRICAL INSTALLATION

Electrical installation shall comply with NFPA 70 and ANSI C2.

3.3 ONSITE INSPECTION AND TESTS

The following tests shall be performed after the complete installation of each engine-generator set and its associated equipment. Data taken during engine runs shall be recorded in at least 15 minute intervals and shall include all electrical, pressure, and temperature information available.

3.3.1 Power Factor

All load runs shall be made at 0.8 power factor.

3.3.2 Contractor Supplied

The Contractor shall provide all equipment and supplies required for inspections and tests including fuel, test instruments, loadbanks at the specified power factors, etc.

3.3.3 Instruments

All panel gages, meters, displays, instruments, etc., provided under this specification shall be verified during all test runs by test instruments of greater precision and accuracy. All test instruments shall be calibrated by a recognized standards laboratory within 30 days prior to testing.

3.3.4 Sequence

The following sequence shall be adhered to. Measurements shall be made and recorded of all parameters necessary to verify that each set meets all specified parameters. If the results of any step below are not satisfactory, the necessary readjustments, replacements, etc., shall be made, installed and/or performed and the step repeated until satisfactory results are obtained.

3.3.4.1 Piping Test

a. All lube-oil piping shall be flushed with the same type of fluid intended to flow through the piping until the out-flowing fluid has no obvious sediment or emulsion.

b. All piping shall be pressure tested with air pressure at 150 percent of the maximum anticipated working pressure for a period of 2 hours to prove the piping has no leaks. If piping is to be insulated the test shall be performed before the insulation is applied.

3.3.4.2 Initial Inspection

a. All engine and generator mounting bolts shall be visually inspected and checked for proper application. Alignment of engine and generator shafts shall be inspected and checked by dial indicator to prove that no misalignment has occurred.

b. The engine-generator connection coupling shall be inspected and checked by dial indicator to prove that no misalignment has occurred. The dial indicator shall measure variation in radial positioning and axial clearance between the coupling halves. Readings shall be taken at 4 points, spaced 90 degrees apart. Solid couplings and pin-type flexible couplings shall be aligned within a total indicator reading of 0.0005 to 0.001 inch for both parallel and angular misalignment. For gear type or grid type couplings, 0.002 inch is acceptable. When engine and generator are skid-mounted, the skid shall not be relied upon to maintain alignment until grouted.

c. Generator-rotor air gap shall be inspected and checked to verify that it is adequate.

d. The function of the high and pre-high-coolant fluid outlet temperature circuit shall be demonstrated by removing the temperature sensing element from the engine and immersing it in a vessel containing controlled temperature hot oil and recording the temperature at which it activates.

e. The function of the high- and pre-high-lubricating oil temperature circuit shall be demonstrated by removing the temperature sensing elements from the engines and immersing the elements in a vessel containing controlled-temperature hot oil and recording the temperature at which it activates.

f. The function of the starting battery low voltage alarm circuit shall be demonstrated by disconnecting the starting battery and charger and connecting a variable voltage source to the starting circuit. The voltage shall be decreased down to the low voltage limit. The voltage at which the audible alarm sounds shall be recorded. The source shall be removed and the battery shall be reconnected.

g. The function of the low coolant fluid outlet temperature circuit shall be demonstrated by removing the temperature sensing elements from the engine and immersing the elements in a vessel containing controlled-temperature hot oil and recording the temperature at which it activates.

h. The function of the Generator-breaker-tripped position indication shall be demonstrated by moving the breaker to each position with the breaker de-energized. Record the position in which the audible alarm sounds.

3.3.4.3 Insulation Test

The generator and exciter circuits insulation resistance shall be tested with an insulation tester. Stator readings shall be taken at the circuit breaker, to include generator leads. All results of insulation resistance tests shall be recorded. Readings shall be within limits specified by the manufacturer. Mechanical operation, insulation resistance, protective relay calibration and operation, and wiring continuity of assembly shall be verified prior to starting engine operation for testing as specified herein. Precautions shall be taken to preclude damaging generator components during test.

3.3.4.4 Electrical Protective Device Tests

Protective devices shall be visually and mechanically inspected, adjusted, tested, and calibrated in accordance with the manufacturers published instructions. Device ratings, settings, and operation shall be documented.

3.3.4.5 Safety Run Test

a. Perform and record engine manufacturer's recommended prestarting checks and inspections. Check coolant fluid and lube-oil levels.

b. Start the engine, record the starting time, make and record all engine manufacturer's after-starting checks and inspections during a reasonable warm-up period.

c. Operate the engine generator-set for at least 2 hours at 75 percent of rated load.

d. Verify proper operation of all controls.

e. Verify proper operation and setpoints of all gauges and instruments.

f. Verify proper operation of all ancillary equipment.

g. Activate the manual emergency stop switch.

h. Start the engine, record the starting time, make and record all engine manufacturer's after-starting checks and inspections and operate the engine generator-set for at least 15 minutes at 75 percent of rated load.

i. Manually adjust the governor to increase engine speed past the overspeed limit. Record the RPM at which the engine shuts down.

j. Start the engine, record the starting time, make and record all engine manufacturer's after-starting checks and inspections and operate the engine generator-set for at least 15 minutes at 75 percent of rated load.

k. Remove the time-delay low lube oil pressure alarm bypass and try to start the engine. Record the results. Attach a manifold to the engine oil system that allows oil to be manually drained off slowly.

l. Start the engine, record the starting time, make and record all engine manufacturer's after-starting checks and inspections and operate the engine generator-set for at least 15 minutes at 75 percent of rated load.

m. Manually drain off oil slowly to empty the engine to below the low lube-oil level limit and record the level at which the engine shuts down. Refill oil to recommended level.

n. Start the engine, record the starting time, make and record all engine manufacturer's after-starting checks and inspections and operate the engine generator-set for at least 15 minutes at 100 percent of rated load. Record the maximum sound level from the engine at each of 8 different locations 45 degrees apart around a circle 75 feet in radius.

o. Manually add oil slowly to fill the engine to above the high lube-oil level limit and record the level at which the audible alarm sounds. Drain off oil to empty the engine down to the normal operating level. Refill oil to recommende level.

p. Manually adjust the governor to speed up the engine to a level beyond the over frequency limit and record the frequency when the audible alarm sounds. Manually adjust the governor to slow down the engine to a level below the under frequency limit and record the frequency when the audible alarm sounds. Return the speed to the rated value.

3.3.4.6 Engine Load Run Test

The engine load run test shall be accomplished warm weather, with an ambient temperature above 85 degrees fahrenheit during daylight hours.

a. Perform and record all engine manufacturer's recommended prestarting checks and inspections. Include as a minimum checking coolant fluid and lube-oil levels.

b. Start the engine, make and record all engine manufacturer's after-starting checks and inspections during a reasonable warm-up period.

c. Operate the engine generator-set for at least 2 hours at 75 percent of rated load.

d. Increase load to 100 percent of rated load and operate the engine generator-set for at least 2 hours.

e. Increase load to 110 percent of rated load and operate the engine generator-set for at least 2 hours.

f. Decrease load to 100 percent of rated load and operate the engine generator-set for at least 2 hours or until all temperatures have stabilized.

g. Decrease load to 0 and increase back to 100 percent of rated load in steps equal to the Maximum Step Load Change specified in paragraph SYSTEM DESCRIPTION to verify frequency and voltage regulation, stability and transient response. Test by measuring frequency and voltage with high resolution high speed strip chart recorders and express the results as detailed in MIL-STD 705 method 608.1a.

h. Drop the entire load at once to verify frequency and voltage regulation, stability and transient response. Test by measuring frequency and voltage with high resolution high speed strip chart recorders and express the results as detailed in MIL-STD 705 method 608.1a.

i. Increase load to 75 percent rated load in steps no larger than the Maximum Step Load Increase specified in paragraph SYSTEM

DESCRIPTION. Drop the entire load at once to verify frequency and voltage regulation, stability and transient response. Test by measuring frequency and voltage with high resolution high speed strip chart recorders and express the results as detailed in MIL-STD 705 method 608.1a.

j. Increase load to 50 percent rated load in steps no larger than the Maximum Step Load Increase specified in paragraph SYSTEM DESCRIPTION. Drop the entire load at once to verify frequency and voltage regulation, stability and transient response. Test by measuring frequency and voltage with high resolution high speed strip chart recorders and express the results as detailed in MIL-STD 705 method 608.1a.

k. Increase load to 5 percent rated load in steps no larger than the Maximum Step Load Increase specified in paragraph SYSTEM DESCRIPTION. Drop the entire load at once to verify frequency and voltage regulation, stability and transient response. Test by measuring frequency and voltage with high resolution high speed strip chart recorders and express the results as detailed in MIL-STD 705 method 608.1a.

l. Perform all necessary tests for electromagnetic compatibility in accordance with MIL-STD 461, Class C. Capacitors or bonds required to suppress interference to acceptable limits shall be provided.

m. Shut down the engine.

3.3.4.7 Final Inspection

a. Remove the lube oil filter and have the oil and filter examined by the engine manufacturer for excessive metal, abrasive foreign particles, etc. Any corrective action shall be verified for effectiveness by running the engine for 8 hours at full rated load, then re-examining the oil and filter.

b. Visually inspect and check all engine and generator mounting bolts for tightness and visible damage. Inspect and check alignment of engine and generator shafts by dial indicator to prove that no misalignment has occurred.

c. Inspect and check the engine-generator connection coupling by dial indicator to prove that no misalignment has occurred. The dial indicator shall measure variation in radial positioning and axial clearance between the coupling halves. Readings shall be taken at 4 points, spaced 90 degrees apart. Solid couplings and pin-type flexible couplings shall be aligned within a total indicator reading of 0.0005 to 0.001 inch for both parallel and angular misalignment. For gear type or grid type couplings, 0.002 inch is acceptable. When engine and generator are skidmounted, the skid shall not be relied upon to maintain alignment until grouted.

d. Inspect and check generator-rotor air gap to verify that it is adequate.

3.4 MANUFACTURER'S FIELD SERVICE

3.4.1 Onsite Training

The Contractor shall conduct a training course for operating staff as designated by the Contracting Officer. The course instructions shall cover pertinent points involved in operating, starting, stopping, servicing the equipment, as well as all major elements of the operation and maintenance manuals. Additionally, the course

instructions shall demonstrate all routine maintenance operations such as oil change, oil filter change, air filter change, etc.

3.4.2 Field Engineer

The engine generator set manufacturer shall furnish a qualified field engineer to supervise the complete installation of the engine-generator set, assist in the performance of the Onsite tests, and instruct personnel as to the operational and maintenance features of the equipment.

3.5 FIELD PAINTING

Field painting shall be as specified in Section 09900 PAINTING, GENERAL.

3.6 ACCEPTANCE

Final acceptance of the engine-generator set will not be given until the contractor has successfully completed all tests and after all defects in installation material or operation have been corrected.

-- End of Section --

SECTION 16370

ELECTRICAL DISTRIBUTION SYSTEM, AERIAL

PART 1 GENERAL

1.1 REFERENCES

The publications listed below form a part of this specification to the extent referenced. The publications are referred to in the text by basic designation only.

AMERICAN NATIONAL STANDARDS INSTITUTE (ANSI)

ANSI C2	(1996) National Electrical Safety Code
ANSI C135.1	(1979) Galvanized Steel Bolts and Nuts for Overhead Line Construction
ANSI C135.2	(1987) Threaded Galvanized Ferrous Strand-Eye Anchor Rods and Nuts for Overhead Line Construction
ANSI C135.4	(1987) Zinc-Coated Ferrous Eyebolts and Nuts for Overhead Line Construction
ANSI C135.14	(1979) Staples with Rolled or Slash Points for Overhead Line Construction
ANSI C135.17	(1988) Galvanized Ferrous Insulator Pins with Lead Threads for Overhead Line Construction
ANSI C135.22	(1988) Galvanized Ferrous Pole-Top Insulator Pins with Lead Threads for Overhead Line Construction
ANSI C135.33	(1988) Galvanized Ferrous Crossarm for Overhead Line Construction

AMERICAN SOCIETY FOR TESTING AND MATERIALS (ASTM)

ASTM A 123	(1989a) Zinc (Hot-Dip Galvanized) Coatings on Iron and Steel Products
ASTM A 153	(1982; R 1987) Zinc Coating (Hot-Dip) Iron and Steel Hardware
ASTM A 575	(1989) Steel Bars, Carbon, Quality, M-Grades
ASTM A 576	(1990b) Steel Bars, Carbon, Hot-Wrought, Special Quality
ASTM B 1	(1990) Hard-Drawn Copper Wire
ASTM B 8	(1990) Concentric-Lay-Stranded Copper Conductors, Hard, Medium-Hard, or Soft
ASTM B 117	(1990) Salt Spray (Fog) Testing
ASTM D 1654	(1979a; R 1984) Evaluation of Painted or Coated Specimens Subjected to Corrosive Environment

AMERICAN WOOD-PRESERVERS' ASSOCIATION (AWPA)

AWPA C25	(1992) Sawn Crossarms - Preservative Treatment by Pressure Processes

INSTITUTE OF ELECTRICAL AND ELECTRONIC ENGINEERS (IEEE)

IEEE C62.1	(1989) Surge Arresters for ac Power Circuits
IEEE C62.11	(1987) Metal-Oxide Surge Arresters for AC Power Circuits
IEEE Std 100	(1988) IEEE Standard Dictionary of Electrical and Electronics Terms

NATIONAL ELECTRICAL MANUFACTURERS ASSOCIATION (NEMA)

NEMA LA 1	(1986) Surge Arresters
NEMA SG 2	(1986) High-Voltage Fuses
NEMA WC 7	(1988) Cross-Linked-Thermosetting- Polyethylene-Insulated Wire and Cable for the Transmission and Distribution of Electrical Energy

NATIONAL FIRE PROTECTION ASSOCIATION (NFPA)

NFPA 70	(1996) National Electrical Code

RURAL ELEC TRIFICATION ADMINISTRATION (REA)

REA DT-5B	(1987) Wood Crossarms (Solid and Laminated), Transmission Timbers and Pole Keys

UNDERWRITERS LABORATORIES (UL)

UL 467	(1984; Rev thru Nov 1986) Grounding and Bonding Equipment
UL 486A	(1991; Rev Oct 1991) Wire Connectors and Soldering Lugs for Use with Copper Conductors
UL 486B	(1991; Rev thru Apr 1992) Wire Connectors for Use with Aluminum Conductors

1.2 GENERAL REQUIREMENTS

1.2.1 Terminology

Terminology used in this specification is as defined in IEEE Std 100.

1.3 SUBMITTALS

The following shall be submitted in accordance with Section 01300 SUBMITTALS:

SD-01 Data

Manufacturer's Catalog; GA

Submit data composed of catalog cuts, brochures, circulars, specifications, product data, and printed information in sufficient detail and scope to verify compliance with the requirements of the contract documents.

Material, Equipment, and Fixture Lists; GA

A complete itemized listing of equipment and materials proposed for incorporation into the work shall be submitted. Each entry shall include an item number, the quantity of items proposed, and the name of the manufacturer of each such item.

SD-04 Drawings

Electrical Distribution System; GA

Detail drawings consisting of equipment drawings, illustrations, schedules, instructions, diagrams and other information necessary to define the installation and enable the Government to check conformity with the requirements of the contract drawings. Detail drawings shall as a minimum include:

a. Crossarms.

b. Conductors.

c. Surge arresters.

d. Fused cutouts.

If departures from the contract drawings are deemed necessary by the Contractor, complete details of such departures shall be submitted with the detail drawings. Approved departures shall be made at no additional cost to the Government.

Detail drawings shall show how components are assembled, function together and how they will be installed on the project. Data and drawings for component parts of an item or system shall be coordinated and submitted as a unit. Data and drawings shall be coordinated and included in a single submission. Multiple submissions for the same equipment or system are not acceptable except where prior approval has been obtained from the Contracting Officer. In such cases, a list of data to be submitted later shall be included with the first submission. Detail drawings shall consist of the following:

a. Detail drawings showing physical arrangement, construction details, connections, finishes, materials used in fabrication, access requirements for installation and maintenance, physical size, electrical characteristics, and equipment weight. Drawings shall be drawn to scale and/or dimensioned. All optional items shall be clearly identified as included or excluded.

As-Built Drawings; GA

The as-built drawings shall be a record of the construction as installed. The drawings shall include all the information shown on the contract drawings as well as all deviations, modifications, and changes from the contract drawings, however minor. The as-built drawings shall be kept at the job site and updated daily. The as-built drawings shall be a full sized set of prints marked to reflect all deviations, modifications, and changes. The as-built drawing shall be complete and show the location, size, dimensions, part identification, and other information. Additional sheets may be added. The as-built drawings shall be jointly inspected for accuracy and completeness by the Contractor's quality control representative and by the Contracting Officer prior to the submission of each monthly pay estimate. Upon completion of the work, the Contractor shall submit three full sized sets of the marked prints to the Contracting Officer for approval. If upon review, the as-built drawings are found to contain errors and/or omissions, they will be returned to the Contractor for correction. The Contractor shall correct and return the as-built drawings to the Contracting Officer for approval within ten calendar days from the time the drawings are returned to the Contractor.

SD-13 Certificates

Materials and Equipment; FIO

Where materials or equipment are specified to conform to the standards of the Underwriters Laboratories (UL) or to be constructed or tested, or both, in accordance with the standards of the American National Standards Institute (ANSI), the Institute of Electrical and Electronic Engineers (IEEE), or the National Electrical Manufacturers Association (NEMA), the Contractor shall submit proof that the items provided under this section of the specifications conform to such requirements. The label of, or listing by, UL will be acceptable as evidence that the items conform thereto. Either a certification or a published catalog specification data statement, to the effect that the item is in accordance with the referenced ANSI or IEEE standard, will be acceptable as evidence that the item conforms thereto. A similar certification or published catalog specification data statement to the effect that the item is in accordance with the referenced NEMA standard, by a company listed as a member company of NEMA, will be acceptable as evidence that the item conforms thereto. In lieu of such certification or published data, the Contractor may submit a certificate from a recognized testing agency equipped and competent to perform such services, stating that the items have been tested and that they conform to the requirements listed, including methods of testing of the specified agencies. Compliance with above-named requirements does not relieve the Contractor from compliance with any other requirements of the specifications.

1.4 DELIVERY, STORAGE, AND HANDLING

Devices and equipment shall be visually inspected by the Contractor when received and prior to acceptance from conveyance. Stored items shall be protected from the environment in accordance with the manufacturer's published instructions. Damaged items shall be replaced.

1.5 EXTRA MATERIALS

One additional spare fuse or fuse element for each furnished fuse or fuse element shall be delivered to the contracting officer when the electrical system is accepted. Two complete sets of all special tools required for maintenance shall be provided, complete with a suitable tool box. Special tools are those that only the manufacturer provides, for special purposes (to access compartments, or operate, adjust, or maintain special parts).

PART 2 PRODUCTS

Products shall conform to the following requirements. Items of the same classification shall be identical including equipment, assemblies, parts, and components.

2.1 STANDARD PRODUCT

Material and equipment shall be the standard product of a manufacturer regularly engaged in the manufacture of the product and shall essentially duplicate items that have been in satisfactory use for at least 2 years prior to bid opening.

2.2 CORROSION PROTECTION

2.2.1 Aluminum Materials

Aluminum shall not be used in contact with earth or concrete. Where aluminum conductors are connected to dissimilar metal, fittings conforming to UL 486B shall be used.

2.2.2 Ferrous Metal Materials

2.2.2.1 Hardware

Ferrous metal hardware shall be hot-dip galvanized in accordance with ASTM A 153 and ASTM A 123.

2.2.2.2 Equipment

Equipment and component items, including but not limited to ferrous metal luminaires not hot-dip galvanized or porcelain enamel finished, shall be provided with corrosion-resistant finishes which shall withstand 480 hours of exposure to the salt spray test specified in ASTM B 117 without loss of paint or release of adhesion of the paint primer coat to the metal surface in excess of 1/16 inch from the test mark. The described test mark and test evaluation shall be in accordance with ASTM D 1654 with a rating of not less than 7 in accordance with TABLE 1, (procedure A). Cut edges or otherwise damaged surfaces of hot-dip galvanized sheet steel or mill galvanized sheet steel shall be coated with a zinc rich paint conforming to the manufacturer's standard.

2.2.3 Finishing

Painting required for surfaces not otherwise specified and finish painting of items only primed at the factory shall be as specified in Section 09900 PAINTING, GENERAL.

2.4 CONDUCTORS, CONNECTORS, AND SPLICES

2.4.1 Copper Conductors

Hard-drawn-copper conductors shall comply with ASTM B1 and ASTM B8 as appropriate for the conductor size.

2.4.2 Connectors and Splices

Connectors and splices shall be of copper alloys for copper conductors, aluminum alloys for aluminum-composition conductors, and a type designed to minimize galvanic corrosion for copper to aluminum-composition conductors. Aluminum-composition and aluminum-composition to copper shall comply with UL 486B, and copper to copper shall comply with UL 486A.

2.5 MEDIUM-VOLTAGE LINES

2.5.1 Insulated Medium-Voltage Lines

Insulated medium-voltage line conductors shall be of the factory-assembled, type, having a rated circuit voltage of 15 kV, and a 133 percent insulation level. Conductor material shall be copper. Insulation shall be tree-resistant-cross-linked thermosetting polyethylene (TRXLP) conforming to NEMA WC 7

2.6 POLES LINE HARDWARE

Zinc-coated hardware shall comply with ANSI C135.1, ANSI C135.2, ANSI C135.4, ANSI C135.14, ANSI C135.17, ANSI C135.22, and ANSI C135.33. Steel hardware shall comply with ASTM A 575 and ASTM A 576. All hardware shall be hot-dip galvanized in accordance with ASTM A 153. Pole-line hardware shall be hot-dip galvanized steel. Suitable washers shall be installed under boltheads and nuts on wood surfaces and elsewhere as required. Washers used on through-bolts and double-arming bolts shall be approximately 2-1/4 inches square and 3/16-inch thick. The diameter of holes in washers shall be the correct standard size for the bolt on which a washer is used. Washers for use under heads of carriage-bolts shall be of the proper size to fit over square shanks of bolts. Eye bolts, bolt eyes, eyenuts, strain-load plates, lag screws, guy clamps, fasteners, hooks,

shims, and clevises shall be used wherever required to support and to protect poles, brackets, crossarms, guy wires, and insulators.

2.7 CROSSARM ASSEMBLIES

2.7.1 Crossarms

Crossarms shall comply with REA DT-5B and be solid wood, distribution type, except cross-sectional area with pressure treatment conforming to AWPA C25, and a 1/4 inch, 45 degree chamfer on all top edges. Cross-sectional area minimum dimensions shall be 4-1/2 inches in height by 3-1/2 inches in depth in accordance with ANSI C2 for Grade B construction. Crossarms shall be 8 feet in length. Crossarms shall be machined, chamfered, trimmed, and bored for stud and bolt holes before pressure treatment. Factory drilling shall be provided for pole and brace mounting and for mounting of fused cutouts, except where otherwise indicated or required. Drilling shall provide required climbing space and wire clearances. Crossarms shall be straight and free of twists to within 1/10 inch per foot of length. Bend or twist shall be in one direction only.

2.7.2 Crossarm Gains

Crossarm gains shall comply with ANSI C135.33.

2.8 FUSES AND SWITCHES, MEDIUM-VOLTAGE

2.8.1 Fused Cutouts

Medium-voltage fuses and cutouts shall comply with NEMA SG 2 and shall be of the open type construction rated 15 kV and of the heavy-duty type. Open-link cut-outs are not acceptable. Fuses shall be either indicating or dropout type. Fuse ratings shall be as indicated. Fuse cutouts shall be equipped with mounting brackets suitable for the indicated installations.

2.9 SURGE ARRESTERS

Surge arresters shall comply with NEMA LA 1 and IEEE C62.1, and IEEE C62.11, and shall be provided for protection of aerial-to-underground transitions. Arresters shall be distribution class, rated as shown. Arresters shall be equipped with mounting brackets suitable for the indicated installations. Arresters shall be of the metal-oxide varistor type suitable for outdoor installations.

2.10 GROUNDING AND BONDING

2.10.1 Driven Ground Rods

Ground rods shall be of copper-clad steel conforming to UL 467.

2.10.2 Grounding Conductors

Grounding conductors shall be bare, except where installed in conduit with associated phase conductors. Insulated conductors shall be of the same material as the phase conductors and green color-coded, except that conductors shall be rated no more than 600 volts. Bare conductors shall be ASTM B 8 soft-drawn unless otherwise indicated. Aluminum is not acceptable.

PART 3 EXECUTION

3.1 GENERAL INSTALLATION REQUIREMENTS

Equipment and devices shall be installed and energized in accordance with the manufacturer's published instructions. Circuits installed in conduits or underground and splices and terminations for medium-voltage cable shall

conform to the requirements of Section 16375 ELECTRICAL DISTRIBUTION SYSTEM, UNDERGROUND.

3.1.1 Conformance to Codes

The installation shall comply with the requirements and recommendations of NFPA 70 and ANSI C2 for heavy loading districts, Grade B construction. No reduction in clearance shall be made.

3.1.2 Verification of Dimensions

The Contractor shall become familiar with details of the work, shall verify dimensions in the field, and shall notify the Contracting Officer of any discrepancy before performing any work.

3.2 CROSSARM MOUNTING

Crossarms shall be bolted to poles with 5/8 inch through-bolts with square washers at each end. Bolts shall extend not less than 1/8 inch nor more than 2 inches beyond nuts. On single crossarm construction, the bolt head shall be installed on the crossarm side of the pole. Metal crossarm braces shall be provided on crossarms. Flat braces may be provided for 8 foot crossarms and shall be 1/4 inch by 1-1/4 inches, not less than 28 inches in length. Flat braces shall be bolted to arms with 3/8 inch carriage bolts with round or square washers between boltheads and crossarms, and secured to poles with 1/2-inch by 4-inch lag screws after crossarms are leveled and aligned. Double crossarms shall be securely held in position by means of 5/8 inch double-arming bolts. Each double-arming bolt shall be equipped with four nuts and four square washers.

3.2.1 Equipment Arms

Equipment arms shall be set parallel or at right angles to lines as required to provide climbing space. Equipment arms shall be located below line construction to provide necessary wire and equipment clearances.

3.3 CONDUCTOR INSTALLATION

3.3.1 Connectors and Splices

Connectors and splices shall be mechanically and electrically secure under tension and shall be of the nonbolted compression type. The tensile strength of any splice shall be not less than the rated breaking strength of the conductor. Splice materials, sleeves, fittings, and connectors shall be noncorrosive and shall not adversely affect conductors. Aluminum-composition conductors shall be wire brushed and an oxide inhibiter applied before making a compression connection. Connectors which are factory-filled with an inhibiter are acceptable. Inhibiters and compression tools shall be of types recommended by the connector manufacturer. Noninsulated connectors shall be smoothly taped to provide a waterproof insulation equivalent to the original insulation, when installed on insulated conductors. On overhead connections of aluminum and copper, the aluminum shall be installed above the copper.

3.4 CONNECTIONS BETWEEN AERIAL AND UNDERGROUND SYSTEMS

Connections between aerial and underground systems shall be made as shown. Underground cables shall be extended up poles in conduit to cable terminations. Conduits shall be secured to the wood poles by two-hole galvanized steel pipe straps spaced not more than 10 feet apart and with one strap not more than 12 inches from any bend or termination. Cables shall be supported by devices separate from the conduit or guard, near their point of exit from the riser conduit ac guard. Cables guards shall be secured in accordance with the manufacturers published procedure. Conduits shall be equipped with bushings to protect cables and minimize water entry.

3.5 GROUNDING

Noncurrent-carrying metal parts of equipment and conductor assemblies, such as medium-voltage cable terminations and messengers and other noncurrent-carrying metal items shall be grounded. Additional grounding of equipment, neutral, and surge arrester grounding systems shall be installed at poles where indicated.

3.5.1 Grounding Electrodes

Grounding electrodes shall be installed as follows:

3.5.1.1

Driven rod electrodes - Unless otherwise indicated, ground rods shall be located approximately three feet out from base of the pole and shall be driven into the earth until the tops of the rods are approximately one foot below finished grade. Multiple rods shall be evenly spaced at least 10 feet apart and connected together two feet below grade with a minimum No. 6 bare copper conductor.

3.5.2 Grounding and Bonding Connections

Connections above grade shall be made by the fusion-welding process or with bolted solderless connectors in compliance with UL 467, and those below grade shall be made by a fusion-welding process.

3.5.3 Grounding Electrode Conductors

A single continuous vertical grounding electrode conductor shall be installed on each pole and connected directly to the grounding electrodes indicated on the drawings or required by these specifications. All equipment, neutrals, surge arresters, and other items required to be grounded shall be connected directly to this vertical conductor. The grounding electrode conductor shall be sized as shown. Grounding electrode conductors shall be stapled to wood poles at intervals not exceeding 2 feet. On metal poles, a preformed galvanized steel strap, 5/8 inch wide by 22-gauge minimum by length, secured by a preformed locking method standard with the manufacturer, shall be used to support a grounding electrode conductor installation on the pole and spaced at intervals not exceeding 5 feet with one band not more than 3 inches from each end of the vertical grounding electrode conductor. Bends greater than 45 degrees in grounding electrode conductor are not permitted.

-- End of Section --

SECTION 16375

ELECTRICAL DISTRIBUTION SYSTEM, UNDERGROUND

PART 1 GENERAL

1.1 REFERENCES

The publications listed below form a part of this specification to the extent referenced. The publications are referred to in the text by basic designation only.

AMERICAN ASSOCIATION OF STATE HIGHWAY AND TRAMSPORTATION OFFICIALS

AASHTO LTS-2	(1985; REV 1986, 1987) Standard Specifications for Structural Supports for Highway Signs, Luminaires and Traffic Signs

AMERICAN NATIONAL STANDARDS INSTITUTE (ANSI)

ANSI C2	(1996) National Electrical Safety Code
ANSI C12.1	(1988) Code for Electricity Metering
ANSI C12.10	(1987) Electromechanical Watthour Meters
ANSI C57.12.26	(1987) Pad-Mounted Compartmental-Type, Self-Cooled, Three-Phase Distribution Transformers for Use with Separable Insulated High-Voltage Connectors, High-Voltage, 34500 Grd Y/19920 Volts and Below; 2500 kVA and Smaller
ANSI C57.12.70	(1978; R 1987) Terminal Markings and Connections for Distribution and Power Transformers
ANSI C62.11	(1991/Draft 6) Metal Oxide Surge Arrester for Alternating Current Power Circuits
ANSI C78.380	(1984) Method for the Designation of High-Intensity Discharge Lamps
ANSI C80.1	(1983) Rigid Steel Conduit - Zinc Coated
ANSI C119.1	(1986) Sealed Insulated Underground Connector Systems Rated 600 Volts

AMERICAN SOCIETY FOR TESTING AND MATERIALS (ASTM)

ASTM A 123	(1984) Zinc (Hot-Dip Galvanized) Coatings on Iron and Steel Products
ASTM A 153	(1982; R 1987) Zinc Coating (Hot-Dip) on Iron and Steel Hardware
ASTM B 8	(1986) Concentric-Lay-Stranded Copper Conductors, Hard, Medium-Hard, or Soft
ASTM B 117	(1985) Salt Spray (Fog) Testing
ASTM D 923	(1988) Sampling Electrical Insulating Liquids

ASTM D 1654	(1979a; R 1984) Evaluation of Painted or Coated Specimens Subjected to Corrosive Environments
ASTM D 3304	(1977; R 1983) Analysis of Environmental Materials for Polychlorinated Biphenyls

FACTORY MUTUAL ENGINEERING AND RESEARCH CORPORATION (FM)

FM-01	(1989; Supple I, II III) Approval Guide: A Guide to Equipment, Materials and Services Approved by Factory Mutual Research for Property Conservation

FEDERAL SPECIFICATIONS (FS)

FS W-S-610	(Rev D; Notice 1) Splice Connectors

INSTITUTE OF ELECTRICAL AND ELECTRONICS ENGINEERS

IEEE Std 48	(1975) Standard Test Procedures and Requirements for High-Voltage Alternating-Current Cable Terminations
IEEE Std 142	(1982) Recommended Practice for Grounding of Industrial and Commercial Power Systems
IEEE Std 386	(1985) Separable Insulated Connector Systems for Power Distribution Systems Above 600V
IEEE Std 404	(1986) Cable Joints for Use with Extruded Dielectric Cable Rated 5000 V through 46 000 V and Cable Joints for Use with Laminated Dielectric Cable Rated 2500 V Through 500000V
IEEE Std 592	(1977) Exposed Semiconducting Shields on Premolded High Voltage Cable Joints and Separable Insulated Connectors

MILITARY SPECIFICATIONS (MS)

MS DOD-P-21035	(Rev A) Paint, High Zinc Dust Content, Galvanizing Repair (Metric)

NATIONAL ELECTRICAL MANUFACTURERS ASSOCIATION (NEMA)

NEMA FB 1	(1988) Fittings, Cast Metal Boxes, and Conduit Bodies for Conduit and Cable Assemblies
NEMA SG 2	(1986) High-Voltage Fuses
NEMA TC 6	(1983) PVC and ABS Plastic Utilities Duct for Underground Installation
NEMA WC 7	(1982: R 1988; Rev 1 thru 4) Cross Linked-Thermosetting-Polyethylene-Insulated Wire and Cable for the Transmission and Distribution of Electrical Energy

NATIONAL FIRE PROTECTION ASSOCIATION (NFPA)

NFPA 70	(1996) National Electrical Code

UNDERWRITERS LABORATORIES (UL)

UL-03	(1989; Supple) Electrical Construction Materials Directory
UL 6	(Oct 23, 1981; 9th Ed; Rev, Nov 22, 1989) Rigid Metal Conduit
UL 467	(Nov 22, 1984, 6th Ed; Rev thru Nov 14, 1986) Grounding and Bonding Equipment
UL 486A	(Nov 24, 1980, 7th Ed; Rev thru Oct 12, 1989) Wire Connectors and Soldering Lugs for Use with Copper Conductors
UL 514A	(Dec 1, 1983; 7th Ed; Rev thru Jan 22, 1990) Metallic Outlet Boxes
UL 854	(Feb 9, 1987; 7th Ed; Rev thru Feb 2, 1990) Service-Entrance Cables

1.2 GENERAL REQUIREMENTS

Items of the same classification shall be identical including equipment, assemblies, parts, and components.

1.2.1 Code Compliance

The installation shall comply with the requirements and recommendations of NFPA 70 and ANSI C2.

1.2.2 Standard Product

Material and equipment shall be a standard product of a manufacturer regularly engaged in the manufacture of the product and shall essentially duplicate items that have been in satisfactory use for at least 2 years prior to bid opening.

1.2.3 Nameplates

Each major component of equipment shall have as a minimum the manufacturer's name, address, and catalog or style number on a nameplate securely attached to the item of equipment. Nameplates for individual items of electrical equipment shall be as specified in referenced publications and shall be provided on each item of equipment. Transformer nameplates shall be permanently marked and state that the transformer dielectric to be supplied is non-PCB classified with less than 50 parts per million (ppm) PCB content. If transformer nameplate is not so marked, the Contractor shall furnish manufacturer's certification for each transformer that the dielectric is non-PCB classified with less than 50 ppm PCB content. Certifications shall be related to serial numbers on transformer nameplates. Transformer dielectric exceeding the 50 ppm PCB content or transformers without certification will be considered as PCB insulated and will not be acceptable. In lieu of the manufacturer's certification, the Contractor may submit a test sample of the dielectric in accordance with ASTM D 923 and have tests performed per ASTM D 3304 at an EPA-approved testing facility to obtain this certification. Transformers with test results indicating PCB levels exceeding 50 ppm shall be replaced or decontaminated in accordance with approved EPA procedures to achieve the acceptable levels. The certification specified shall be submitted and approved prior to acceptance of the transformer and approved dielectric. It is not permissible to dilute contaminated dielectric in an attempt to lower the level of contamination. The PCB contaminated dielectric must be marked as PCB and transported to and incinerated by an approved EPA waste disposal facility. The Contractor shall furnish certification of proper disposal.

1.2.4 Prevention of Corrosion

1.2.4.1 Metallic Materials

Metallic materials shall be protected against corrosion as specified.

1.2.4.2 Ferrous Metal Hardware

Ferrous metal hardware shall be hot-dip galvanized in accordance with ASTM A 123 and ASTM A 153.

1.2.5 Verification of Dimensions

The Contractor shall become familiar with details of the work, shall verify dimensions in the field, and shall advise the Contracting Officer of any discrepancy before performing any work.

1.3 SUBMITTALS

Governmental approval is required for submittals with a "GA" designation; submittals having an "FIO" designation are for information only. The following shall be submitted in accordance with Section 01300 SUBMITTAL DESCRIPTIONS:

SD-01 Data

Material, Equipment, and Fixture Lists; GA

A complete itemized listing of equipment and material proposed for incorporation into the work. Each itemization shall include an item number, the quantity of items proposed, and the name of the manufacturer of each item.

SD-04 Drawings

Electrical Distribution System; GA

Complete detail drawings and other descriptive data as required to demonstrate compliance with the contract documents, after receiving complete material lists but before installing any of these items. Detail drawings shall show the ratings of items and systems and how the components of an item and system are assembled, function together and how they will be installed on the project. Data and detail drawings for component parts of an item or system shall be coordinated and submitted as a unit. Multiple submissions for the same equipment or system are not acceptable, except where prior approval has been obtained from the Contracting Officer. In such cases, a list of data to be submitted later shall be included with the first submission. Detail drawings and manufacturer's data shall consist of the following:

a. Detail drawings showing physical arrangement, construction details, connections, finishes, materials used in fabrication, provisions for conduit or busway entrance, access requirements for installation and maintenance, physical size, electrical characteristics, foundation and support details, and equipment weight. Drawings shall be drawn to scale and/or dimensioned. Catalog cuts and published materials may be included to supplement drawings. All optional items shall be clearly identified as included or excluded.

b. Internal wiring diagrams of equipment showing wiring as actually furnished for this project. External wiring connections shall be clearly identified.

Detail drawings for the following items and other items as directed:

(1) Transformers, pad-mounted type.

(2) Luminaires and poles

If departures from the contract drawings are deemed necessary by the Contractor, complete details of such departures, including changes in related portions of the project and the reasons therefor, shall be included with the detail drawings. Approved departures shall be made at no additional cost to the Government. Drawings as required to supplement contract drawings, manufacturer's data and drawings, and Contractor's data to demonstrate compliance with applicable contract requirements. Drawings shall be dimensioned or scaled to show the relative arrangement and mounting details of the equipment or equipment assemblies.

SD-19 Operation and Maintenance Manuals

Electrical Distribution System; GA

Six copies of instruction manuals, within 7 calendar days following the completion of factory tests. Manuals shall include assembly, installation, operation and maintenance manuals, spare parts data which provides supplier name, current cost, catalog order number, and a recommended list of spare parts to be stocked, and all documents previously submitted and approved. Manuals shall include data outlining step-by-step procedures for system startup and operation, and a troubleshooting guide which lists possible operational problems and corrective action to be taken. A brief description of all equipment and their basic operating features shall be included. Documents shall be bound in a suitable binder adequately marked or identified on the spine and front cover. A table of contents page shall be included and marked with pertinent contract information contents of the manual. Tabs shall be provided to separate different types of documents, such as catalog ordering information, drawings, instructions, and spare parts data. Index sheets shall be provided for each section of the manual when warranted by the quantity of documents included under separate tabs or dividers. Three additional copies of the instruction manuals, within 30 calendar days following the approval of the manuals.

SD-09 Reports

Tests; FIO

Certified factory test reports when manufacturers perform routine factory tests normally performed by the manufacturer, including tests required by standards listed in paragraph REFERENCES. Additional certification to verify that each transformer has passed a production line impulse test consisting of one reduced-wave and one full-wave lightning impulse test on each fully-insulated high-voltage terminal. Field tests shall be made and test reports shall be written and certified by the Contractor. Field tests shall include cable, operational, and resistance-to-ground tests.

SD-13 Certificates

Qualifications; FIO

Certifications, when specified or required, including Certification of the Qualifications of Medium-Voltage Cable Installers, Certified Factory and Field Test Reports, and Certificates of Compliance submitted in lieu of other proofs of compliance with these contract provisions. A certification that contains the names and the qualifications of persons recommended to perform the splicing and termination of medium-voltage cables approved for installation under this contract. The certification shall indicate that any person recommended to perform actual splicing and termination has been adequately trained in the proper techniques and has had at least 3 recent years of experience in splicing and terminating the same or similar types

of cables approved for installation. Any person recommended by the Contractor may be required to perform a dummy or practice splice and termination, in the presence of the Contracting Officer, before being approved as a qualified installer of medium-voltage cables. If that additional requirement is imposed, the Contractor shall provide short sections of the approved types of cables with the approved type of splice and termination kits, and detailed manufacturer's instruction for the proper splicing and termination of the approved cable types. The certification shall be prepared in conformance with paragraph CERTIFICATES OF COMPLIANCE in the SPECIAL CLAUSES, and shall be accompanied by satisfactory proof of the training and experience of persons recommended by the Contractor as cable installers.

Materials and Equipment; GA

When equipment or materials are specified to conform to the standards or publications and requirements of AASHTO, ANSI, ASTM, AEIC, FM, IEEE, IES, NEMA, NFPA, or UL, or to an FS, proof that the items furnished under this section of the specifications conform to the specified requirements shall be included. The label or listing in UL-03 or in FM-01 or the manufacturer's certification or published catalog specification data statement that the items comply with applicable specifications, standards, or publications and with the manufacturer's standards will be acceptable evidence of such compliance. Certificates shall be prepared by the manufacturer when the manufacturer's published data or drawings do not indicate conformance with other requirements of these specifications.

PART 2 PRODUCTS

2.1 MATERIALS

Materials shall conform to the following requirements:

2.1.1 Cables

Cables shall be of annealed copper. Cables shall be single-conductor type, unless otherwise indicated.

2.1.1.1 Low-Voltage Cables

Low-voltage cables shall conform to UL 854 for Type USE service entrance cable and shall utilize cross-linked, thermosetting-polyethylene insulation.

2.1.1.2 Medium-Voltage Cables

Insulated medium-voltage line conductors shall be of the factory-assembled, type, having a rated circuit voltage of 15 kV, and a 133 percent insulation level. Conductor material shall be copper. Insulation shall be tree-resistant-cross-linked thermosetting polyethylene (TRXLP)conforming to NEMA WC 7

Medium-voltage cables shall be cross-linked thermosetting polyethylene insulated conforming to NEMA WC 7. Cables shall have a nonmetallic jacket. Outer covering over insulation shall be a thermoplastic jacket surrounding a metallic sheath. Jackets, shields, and coverings shall conform to NEMA WC 7. Cables shall have both conductor and insulation shielding. Cables shall be single conductor type.

2.1.1.3 Grounding Cables

Grounding cables shall be bare, except where installed in conduit with associated phase conductors. Insulated cable shall be of the same material, green color-coded, and shall be insulated to match associated

phase conductors, except that cable need be rated no more than 600 volt. Bare cables shall be ASTM B 8 soft-drawn unless otherwise indicated; aluminum is not acceptable.

2.1.2 Cable Joints, Terminations, and Connectors

2.1.2.1 Medium-Voltage Cable Joints

IEEE Std 404.

2.1.2.2 Medium-Voltage Cable Terminations

IEEE Std 48.

2.1.2.3 Medium-Voltage Separable Insulated Connectors

IEEE Std 386 and IEEE Std 592. Connectors shall be of the load-break type, of suitable construction for the application and the type of cable connected, and include cable shield adaptors. External clamping points shall be provided.

2.1.2.4 Connectors for Low-Voltage Cables

FS W-S-610; UL 486A for copper conductors.

2.1.3 Concrete

Concrete shall be as specified in Section 03330 CAST-IN-PLACE STRUCTURAL CONCRETE. Duct encasement shall be of monolithic construction. Where a connection is made to an existing duct line, the concrete encasement shall be well bonded or doweled to the existing encasement.

2.1.4 Metallic Conduit

Rigid galvanized steel conduit shall comply with UL 6 and ANSI C80.1. Metallic conduit fittings and outlets shall comply with UL 514A and NEMA FB 1.

2.1.5 Nonmetallic Ducts

2.1.5.1 Concrete Encased Ducts

Schedule 80 or NEMA TC 6 Type EB.

2.1.5.2 Direct Burial

Schedule 80.

2.1.5.3 Conduit Fittings

NEMA FB 1.

2.1.6 Duct and Conduit Caulking Compound

Compounds for sealing ducts and conduit shall have a putty-like consistency workable with the hands at temperatures as low as 35 degrees F, shall neither slump at a temperature of 300 degrees F, nor harden materially when exposed to the air. Compounds shall adhere to clean surfaces of asbestos-cement, fiber, or plastic ducts; metallic conduits or conduit coatings; concrete, masonry, or lead; any cable sheaths, jackets, covers, or insulation materials; and the common metals. Compounds shall form a seal without dissolving, noticeably changing characteristics, or removing any of the ingredients. Compounds shall have no injurious effect upon the hands of workmen or upon materials.

2.1.7 Duct and Fittings, Nonmetallic Type for Installation Underground

Wall thicknesses and fittings shall be suitable for the application. Ducts shall be single, round-bore type. Ducts shall be of the same material when used for applications requiring the same type of wall thickness.

2.1.7.1 Plastic

NEMA TC 6 Schedule 80 PVC.

Conduit fittings shall conform to the applicable NEMA standards, except that where NEMA standards for conduit fittings do not exist for the type of plastic installed, fittings shall be as recommended by the conduit manufacturer.

2.2 COMPONENTS

2.2.1 Grounding and Bonding

Equipment, UL 467. Wire, ASTM B 8, softdrawn copper. All connections below grade shall be fusion welded. Connections above grade shall be fusion welded or be made with connectors which comply with UL 467.

2.2.2 High-Pressure Sodium Lamps

ANSI C78.380, type as indicated.

2.2.3 Nameplates

Nameplates shall be made of corrosion-resistant metal with not less than 1/4-inch tall raised or engraved characters. The nameplate shall be mounted on the front of the enclosure.

2.2.4 Protective Apparatus and Metering Devices

2.2.4.1 Fuses, Medium-Voltage, Including Current-Limiting

NEMA SG 2.

2.2.4.2 Watthour Meters

Watthour meters shall conform to ANSI C12.1 and ANSI C12.10, except numbered terminal wiring sequence and case size may be the manufacturer's standard. Watthour demand meters shall have factory-installed electronic pulse initiators meeting the requirements of ANSI C12.1. Pulse initiators shall be solid-state devices incorporating light-emitting diodes, phototransistors, and power transistors, except that mercury-wetted output contacts are acceptable. Initiators shall be totally contained within watthour demand meter enclosures, shall be capable of operating up to speeds of 500 pulses per minute with no false pulses, and shall require no field adjustments. Initiators shall be calibrated for a pulse rate output of one pulse per 1/4 disc revolution of the associated meter and shall be compatible with the indicated equipment.

2.3 PAD-MOUNTED TRANSFORMERS

Pad-mounted transformers shall by of the outdoor type having the ratings and arrangements indicated and shall comply with ANSI C57.12.26 and ANSI C57.12.70. Transformer windings shall be copper. Medium-voltage ratings of cable terminations shall be 15kV between phases for 133 percent insulation level. Transformer shall be of the dead front type, loop feed, with 10kV dead front lightning arresters. Pad-mounted transformer stations shall be assembled and coordinated by one manufacturer and each transformer station shall be shipped as a complete unit so that field installation requirements are limited to mounting each unit on a concrete pad and connecting it to primary and secondary lines. Stainless steel pins and

hinges shall be provided. Barriers shall be provided between high- and low-voltage compartments. High-voltage compartment doors shall be interlocked with low-voltage compartment doors to prevent access to any high-voltage section unless its associated low-voltage section door has first been opened. Compartments shall be sized to meet the specific dimensional requirements of ANSI C57.12.26. Pentahead locking bolts shall be provided with provisions for a padlock. Transformer color shall be Del Paint #25A-1A Chocolate Chip to match base color scheme.

2.3.1 High-Voltage Compartments

High-voltage compartments shall be dead-front construction. Primary protection shall include loadbreak switching, under oil Bay-O-Net dual sensing fuses, and medium-voltage separable connectors. Switches shall be mounted inside transformer tanks with switch operating handles located in high-voltage compartments and equipped with metal loops for hook stick operation. Fuses shall be interlocked with switches so that fuses can be removed only when the associated switch is in the "OFF" position. Adjacent to medium-voltage cable connections, a nameplate or equivalent stenciled inscription shall be provided inscribed "DO NOT OPEN CABLE CONNECTORS UNLESS SWITCH IS OFF." Adjacent to switches, nameplates shall identify switch operating handles and "ON" and "OFF" positions. Surge arresters shall be provided consisting of combined dead-front molded-rubber separable connectors and 10kV metal-oxide gapless varistor surge protectors. Combination units shall meet the applicable requirements of IEEE Std 386 and ANSI C62.11.

2.3.2 Transformer Tank Sections

Transformers shall comply with ANSI C57.12.26 and shall be of the three phase Delta-Wye, oil-immersed units with two separate windings per phase. Transformers shall be suitable for outdoor use. Capacities and ratings shall be as shown. Four 2-1.2 percent fully rated kVA high-voltage taps shall be provided two above and two below rated primary voltage. Operating handles for primary tap changers for de-energized operation shall be located within high-voltage compartments, externally to transformer tanks. Adjacent to the tap changer operating handle, a nameplate or equivalent stenciled inscription shall be provided and inscribed "DO NOT OPERATE UNDER LOAD."

2.3.3 Low-Voltage Cable Compartments

Neutrals shall be provided with fully-insulated bushings. Tin plated spade type cable terminations, suitable for both copper and aluminum conductors entering from below, shall be provided as necessary to accommodate 2-hole compression lugs for number and size cables indicated.

2.3.4 Accessories

High-voltage warning signs shall be permanently attached to each side of transformer stations. Voltage warning signs shall comply with ANSI C2. Copper-faced steel or stainless steel ground connection pads shall be provided in both the high- and low-voltage compartments. Dial-type thermometer, liquid-level gauge, and drain valve with built-in sampling device shall be provided for each transformer station. Insulated-bushing-type parking stands shall be provided adjacent to each separable load-break elbow to provide for cable isolation during sectionalizing operations.

2.3.5 Fuses, Medium-Voltage, Including Current-Limiting

Medium-voltage fuses, including current-limiting, shall comply with NEMA SG 2.

2.3.6 Warning Signs, High-Voltage

Porcelain enameled steel or approved equal.

2.4 SURGE ARRESTERS

ANSI C62.11, metal oxide type.

2.5 FACTORY COATING

Equipment and component items, including but not limited to transformer stations and ferrous metal luminaires not hot-dip galvanized or porcelain enamel finished, shall be provided with corrosion-resistant finishes which shall withstand 500 hours of exposure to the salt spray test specified in ASTM B 117 without loss of paint or release of adhesion of the paint primer coat to the metal surface in excess of 1/16 inch from the test mark. The scribed test mark and test evaluation shall be in accordance with ASTM D 1654 with a rating of not less than 7 in accordance with TABLE 1, (Procedure A). Cut edges or otherwise damaged surfaces of hot-dip galvanized sheet steel or mill galvanized sheet steel shall be coated with a zinc rich paint conforming to MS DOD-P-21035.

PART 3 EXECUTION

3.1 GENERAL INSTALLATION REQUIREMENTS

Except as covered herein, excavation, trenching, and backfilling shall conform to the requirements of Section 02222 EXCAVATION, TRENCHING, AND BACKFILLING FOR UTILITIES SYSTEMS. Concrete work shall conform to the requirements of Section 03330 CAST-IN-PLACE STRUCTURAL CONCRETE.

3.2 CABLES, GENERAL REQUIREMENTS

The type of installation, size and number of cables shall be as indicated. Conductors larger than No. 8 AWG shall be stranded. Each circuit shall be identified by means of fiber, laminated plastic, or nonferrous-metal tags, or approved equal, in each handhole, each junction box, and at each terminal. Manufacturer's written recommendations shall be furnished for each type of splice and medium-voltage cable joint and termination, and for fireproofing application methods, and shall be approved before any work is done. Medium-voltage cable joints and terminations shall be the standard product of a manufacturer and shall be either of the factory preformed type or of the kit type containing tapes and other required parts. Medium-voltage cable joints shall be made by qualified cable splicers. Compounds and tapes shall be electrical grade suitable for the cable insulation provided and shall use design materials and techniques recommended by the manufacturer. Maximum length of cable pull and cable pulling tensions shall not exceed the cable manufacturer's recommendations.

3.2.1 Duct Line Installation

Cables shall be installed in duct lines where indicated. Neutral and ground conductors shall be installed in the same duct with their associated phase conductors.

3.2.2 Connection to Buildings

Cables shall be extended into the building as indicated, and shall be properly connected to the first applicable termination point. After installation of cables, conduits shall be sealed with caulking compound to prevent entrance of moisture or gases into building.

3.3 MEDIUM-VOLTAGE CABLES

Medium-voltage cables shall be suitable for a rated circuit voltage of 15 kV. Other parts of the cable system such as joints and terminations shall

have ratings not less than the rating of the cables on which they are installed. Separable insulated connectors shall have nominal voltage ratings coordinated to associated apparatus ratings rather than cable ratings when used to connect cable to apparatus. Cables shall be provided with 133 percent insulation level.

3.3.1 Cable Joints

Shields shall be applied as required to continue the shielding system through each entire cable joint. Shields may be integrally molded parts of preformed joints. Shields shall be grounded at each joint.

3.3.1.1 Types

Separable insulated connectors of suitable construction or standard splice kits shall be used. Splice kits may be of the heat-shrinkable type for voltages up to 15 kV.

3.3.1.2 Requirements

Cable joints shall provide insulation and jacket equivalent to that of the associated cable.

3.3.2 Terminations

Terminations shall be IEEE Std 48, Class 1 or Class 2; of the molded elastomer, wet-process porcelain, prestretched elastomer or heat-shrinkable elastomer. Acceptable elastomers are track-resistant silicone rubber or track-resistant ethylene propylene compounds, such as ethylene propylene rubber or ethylene propylene diene monomer. Separable insulated connectors may be used for apparatus terminations, when such apparatus is provided with suitable bushings. Terminations shall be of the outdoor type, except that where installed inside outdoor equipment housings which are sealed against normal infiltration of moisture and outside air, indoor, Class 2 terminations are acceptable. Class 3 terminations are not acceptable. Terminations, where required, shall be provided with mounting brackets suitable for the intended installation and with grounding provisions for the cable shielding, metallic sheath, and armor.

3.4 LOW-VOLTAGE CABLES

Cable shall be rated 600 volts. Other parts of cable systems such as splices and terminations shall be rated at not less than 600 Volts. Splices in wires No. 10 AWG and smaller shall be made with an insulated, solderless, pressure type connector, Type I, Class 1, Grade B, Style G, or Type II, Class 1 of FS W-S-610 and conforming to the applicable requirements of UL 486A. Splices in wires No. 8 AWG and larger shall be made with noninsulated, solderless, pressure type connector, Type II, Class 2 of FS W-S-610, conforming to the applicable requirements of UL 486A. They shall then be covered with an insulation and jacket material equivalent to the conductor insulation and jacket. All splices below grade or in wet locations shall be sealed type conforming to ANSI C119.1 or shall be waterproofed by a sealant-filled, thick wall, heat shrinkable, thermosetting tubing or by pouring a thermosetting resin into a mold that surrounds the joined conductors.

3.5 DUCT LINES

Duct lines shall be concrete-encased, Schedule 80 PVC lines or nonencased direct-burial Schedule 80 PVC as indicated on the drawings.

3.5.1 Requirements

Numbers and sizes of ducts shall be as indicated. Duct lines shall be laid with a minimum slope of 4 inches per 100 feet. Manufactured 90-degree duct bends may be used only for pole or equipment risers, unless specifically

indicated as acceptable. The minimum manufactured bend radius shall be 18 inches for ducts of less than 3-inch diameter, and 36 inches for ducts 3 inches or greater in diameter. Otherwise, long sweep bends having a minimum radius of 25 feet shall be used for a change of direction of more than 5 degrees, either horizontally or vertically. Both curved and straight sections may be used to form long sweep bends as required, but the maximum curve used shall be 30 degrees and manufactured bends shall be used. Ducts shall be provided with end bells whenever duct lines terminate in handholes. Duct line markers shall be provided as indicated at the ends of long duct line stubouts or for other ducts whose locations are indeterminate because of duct curvature or terminations at completely below-grade structures. In lieu of markers, a 5-mil brightly colored plastic tape not less than 3 inches in width and suitably inscribed at not more than 10 feet on centers with a continuous metallic backing and a corrosion-resistant 1-mil metallic foil core to permit easy location of the duct line, shall be placed approximately 12 inches below finished grade levels of such lines. A nylon pull rope shall be inserted in each empty duct. Not less than 10 inches of slack shall be left at each end of the pull rope.

3.5.2 Treatment

Ducts shall be kept clean of concrete, dirt, or foreign substances during construction. Field cuts requiring tapers shall be made with proper tools and match factory tapers. After a duct line is completed, a standard flexible mandrel shall be used for cleaning followed by a brush with stiff bristles. Mandrels shall be at least 12 inches long and have diameters l/4 inch less than the inside diameter of the duct being cleaned. Pneumatic rodding may be used to draw in lead wires. A coupling recommended by the duct manufacturer shall be used whenever an existing duct is connected to a duct of different material or shape. Ducts shall be stored to avoid warping and deterioration with ends sufficiently plugged to prevent entry of any water or solid substances. Ducts shall be thoroughly cleaned before being laid. Plastic ducts shall be stored on a flat surface and protected from the direct rays of the sun.

3.5.3 Concrete Encasement

Each single duct shall be completely encased in concrete with a minimum of 3 inches of concrete. Four inches of concrete shall be provided between adjacent electric power and communication ducts. Duct line encasements shall be monolithic construction. Where a connection is made to a previously poured encasement, the new encasement shall be well bonded or doweled to the existing encasement. At any point tops of concrete encasements shall be not less than 18 inches below finished grade or paving. Separators or spacing blocks shall be made of steel, concrete, plastic, or a combination of these materials placed not further apart than 4 feet on centers. Ducts shall be securely anchored to prevent movement during the placement of concrete and joints shall be staggered at least 6 inches vertically.

3.5.4 Installation of Couplings

Joints in each type of duct shall be made up in accordance with the manufacturer's recommendations for the particular type of duct and coupling selected and as approved. In the absence of specific recommendations, various types of duct joint couplings shall be made watertight as specified.

3.5.4.1 Plastic Duct

Duct joints shall be made by brushing a plastic solvent cement on insides of plastic coupling fittings and on outsides of duct ends. Each duct and fitting shall then be slipped together with a quick one-quarter-turn twist to set the joint tightly.

3.6 TRANSFORMER STATIONS

Transformer stations shall be of the outdoor type having the ratings and arrangements indicated. Medium-voltage ratings of cable terminations for use on primary systems shall be 15 kV between phases for 133 percent insulation level. The voltage rating of protective devices for use on primary or secondary systems shall be not less than the nominal voltage of the system to which they are connected.

3.6.1 Pad-Mounted Tamperproof Compartmental Transformer Stations

Pad-mounted tamperproof compartmental transformer stations shall be of the loop feed type. Protective devices shall have ratings compatible with the associated transformer rating. Transformer stations shall be assembled and coordinated by one manufacturer and each transformer station shall be shipped as a complete unit so that field installation requirements are limited to mounting each unit on a concrete pad and connecting it to primary and secondary lines. Transformer stations shall be provided with a corrosion-resistant finish in accordance with paragraph FACTORY COATING and FINISHING. Stainless steel pins and hinges shall be provided. Barriers are required between high- and low-voltage compartments. High-voltage compartment doors shall be interlocked with low-voltage compartment doors to prevent access to any high-voltage section unless its associated low-voltage section door has first been opened. Compartments shall be sized to meet the specific dimensional requirements of ANSI C57.12.26. Pentahead locking bolts shall be provided.

3.6.1.1 High-Voltage Compartments

High-voltage compartments shall be dead-front construction. Primary protection shall include load-break switching, dual sensing fuses, and medium-voltage separable connectors. Switches shall be of the group-operated type. Switches may be mounted inside transformer tanks with switch operating handles located in high-voltage compartments and equipped with metal loops for hook stick operation. Fuses shall be interlocked with switches so that fuses can be removed only when the associated switch is in the "OFF" position. Adjacent to medium-voltage cable connections, a nameplate or equivalent stencilled inscription shall be provided inscribed "Do not open cable connectors unless switch is off." Adjacent to switches, nameplates shall identify switch operating handles and "ON" and "OFF" positions.

3.6.1.2 Transformer Tank Sections

Transformers shall be three-phase Delta-wye, oil-immersed units with two separate windings per phase. Capacities and ratings shall be as shown. Four 2-1/2 percent fully rated kVA high-voltage taps shall be provided two above and two below rated primary voltage. Operating handles for primary tap changers shall be located within high-voltage compartments, externally to transformer tanks.

3.6.1.3 Low-Voltage Compartments

Neutrals shall be provided with fully-insulated bushings. No ground straps shall be provided between neutrals and ground pads. Clamp type cable terminations, suitable for copper entering from below, shall be provided as necessary.

3.6.2 Installation

Transformer station shall be mounted on concrete pads. Units shall be carefully installed so as not to scratch finishes. After installation, finished surfaces shall be inspected and scratches touched up with a finish furnished by the manufacturer especially for this purpose.

3.6.2.1 Concrete Pads

Concrete pads shall be constructed as indicated on the contract drawings. Tops of concrete pads shall be sloped to drain. Conduits for primary, secondary, and grounding conductors shall be set in place prior to pouring of concrete pads.

3.7 LIGHTING

3.7.1 Luminaires

Luminaires shall be of the type indicated on the drawings. Lamps shall be of the sizes and types indicated and provided with appropriate ballasts.

3.7.2 Poles

Lighting poles shall be a nominal 20 feet in length of aluminum. Poles shall be suitable for use with underground supply conductors. Poles shall be designed for a wind velocity of 70 mph at the base of the pole, for a wind gust factor of 1.3, and for the height and drag factors recommended by AASHTO LTS-2. The effective projected area of luminaires and other pole-mounted devices shall be taken into account in pole design. Poles shall have grounding provisions. Bases shall be of the anchor-bolt-mounted type.

3.7.2.1 Aluminum Poles

Aluminum poles and aluminum brackets shall have anodized finish to match luminaire and shall not be painted.

3.7.2.2 Pole Setting

Poles shall be mounted on cast-in-place foundations. Conduit ells shall be provided for cable entrances into pole interiors.

a. Cast-In-Place Foundations: Concrete foundations, sized as indicated, shall have anchor bolts accurately set in foundations using templates supplied by the pole manufacturer. After the concrete has cured, pole anchor bases shall be set on foundations and leveled by setting anchor bases on leveling nuts and grouting. Poles shall be set plumb. Anchor bolts shall be the manufacturers' standard, and not less than necessary to meet the pole wind loading specified herein and other design requirements.

3.8 GROUNDING

Neutral conductors, cable shields, metallic cable sheaths and armor, metallic conduits, cable terminations, junction boxes, poles, surge arresters, fencing enclosing electrical equipment, and other noncurrent-carrying metallic parts of equipment shall be grounded.

3.8.1 General Requirements

A resistance of not greater than 25 ohms shall be provided, unless otherwise specified. Ground resistances shall be measured in normally dry conditions not less than 48 hours after rainfall. Resistances of systems requiring separate ground rods, rather than a counterpoise, shall be measured separately before bonding below grade. The combined ground resistance of separate systems bonded together below grade may be used to meet the specified ground resistance, but the minimum number of rods indicated must still be provided.

3.8.1.1 Ground Rods

Ground rods shall be copper-clad steel conforming to UL 467 not less than 3/4 inch in diameter by 10 feet in length. Unless otherwise indicated,

ground rods shall be driven into the ground until tops of rods are approximately 1 foot below finished grade.

3.8.1.2 Connections

Connections shall be made by a fusion-welding process.

3.8.2 Neutral Grounding

Neutral conductors shall be grounded where indicated. Ground wires shall be not less than No. 1/0 AWG, except that where the rated phase current exceeds 400 amperes, the size of neutral ground wires shall be increased to not less than one-half the size of the cross-sectional area of the individual phase conductors. Bends greater than 45 degrees in ground wire connections to the ground rods are not permitted.

3.8.3 Equipment Grounding

Equipment frames of metal-enclosed equipment, medium-voltage cable shields at cable joints and terminations, metal splice boxes, chain-link fencing, and other noncurrent-carrying metal items, shall be grounded unless otherwise indicated. Connections to earth shall be made in the same manner as required for neutral grounding. Equipment or devices operating at less than 750 volts may be connected to secondary neutral grounds. Equipment operating at more than 750 volts to ground shall be provided with grounds separate from secondary neutral grounds, but both grounds shall be bonded together below grade at the ground rods or may utilize a common counterpoise.

3.8.4 Lighting Pole Grounding

Bases of lighting poles shall be connected to an adjacent ground rod by means of a No. 8 AWG wire. A ground connection from poles back to neutral ground points shall also be provided utilizing ground wires.

3.8.5 Transformer Station Grounding

3.8.5.1 Pad-Mounted Compartmental Transformer Stations

Ground wires shall be installed below grade and shall connect equipment case ground pads, and transformer neutrals to individual ground rods and to each other. Ground connections shall be not smaller than No. 1/0 AWG.

3.9 TESTS

3.9.1 Operating Test

After the installation is completed, the Contractor shall conduct an operating test for approval. Equipment shall be demonstrated to operate in accordance with the requirements herein. Tests shall be performed in the presence of the Contracting Officer. The Contractor shall furnish instruments and personnel required for the test and the Government will furnish the necessary electric power.

3.9.2 Ground-Resistance Measurements

Ground-resistance measurements of each ground rod shall be taken and certified by the Contractor to the Contracting Officer. No part of the electrical distribution system shall be energized prior to the resistance testing of that system's ground rods and grounding system and submission of test results to the Contracting Officer. Test reports shall indicate the location of the ground rod and grounding system and the resistance and the soil conditions at the time the test was performed. When the building water service is used as a ground or part of the grounding system, ground-resistance measurements shall also be made of this connection. Ground-resistance measurements shall be made in normally dry weather, not

less than 48 hours after rainfall, and with the ground under test isolated from other grounds. The resistance to ground shall be measured using the fall-of-potential method described in IEEE Std 142.

3.9.3 Medium-Voltage Cable Test

After installation and before the operating test the medium-voltage cable system shall be given a high potential test. Direct-current voltage shall be applied on each phase conductor of the system by connecting conductors as one terminal and connecting grounds or metallic shielding or sheaths of the cable as the other terminal for each test. Prior to making the test, the cables shall be isolated by opening applicable protective devices and disconnecting equipment. The method, voltage, length of time, and other characteristics of the test shall be in accordance with NEMA WC 7 and shall not exceed the recommendations of IEEE Std 404 for cable joints unless the cable and accessory manufacturers indicate higher voltages are acceptable for testing. Should any cable fail due to a weakness of conductor insulation or due to defects or injuries incidental to the installation or because of improper installation of cable, cable joints, terminations, or other connections, the Contractor shall make necessary repairs or replace cables as directed.

3.10 FINISHING

Painting required for surfaces not otherwise specified and finish painting of items only primed at the factory, shall be as specified in Section 09900 PAINTING, GENERAL.

-- End of Section --

SECTION 16415

ELECTRICAL WORK, INTERIOR

PART 1 GENERAL

1.1 REFERENCES

The publications listed below form a part of this specification to the extent referenced. The publications are referred to in the text by basic designation only.

AMERICAN NATIONAL STANDARDS INSTITUTE (ANSI)

ANSI C82.4	(1992) Ballasts for High-Intensity-Discharge and Low-Pressure Sodium Lamps (Multiple-Supply Type)

AMERICAN SOCIETY FOR TESTING AND MATERIALS (ASTM)

ASTM D 709	(1992) Laminated Thermosetting Materials

CODE OF FEDERAL REGULATIONS (CFR)

47 CFR 18	Rules and Regulations: Industrial, Scientific, and Medical Equipment
47 CFR 68	Connection of Terminal Equipment to the Telephone Network

INSTITUTE OF ELECTRICAL AND ELECTRONICS ENGINEERS (IEEE)

IEEE C62.41	(1991) Surge Voltages in Low-Voltage AC Power Circuits
IEEE Std 81	(1983) Guide for Measuring Earth Resistivity, Ground Impedance, and Earth Surface Potentials of a Ground System (Part 1)

INSULATED CABLE ENGINEERS ASSOCIATION (ICEA)

ICEA S-80-576	(1988) Communications Wire and Cable for Wiring of Premises

NATIONAL ELECTRICAL MANUFACTURERS ASSOCIATION (NEMA)

NEMA AB 1	(1993) Molded Case Circuit Breakers and Molded Case Switches
NEMA FU 1	(1986) Low Voltage Cartridge Fuses
NEMA ICS 1	(1993) Industrial Controls and Systems
NEMA ICS 2	(1993) Industrial Control Devices, Controllers and Assemblies
NEMA ICS 3	(1993) Industrial Systems
NEMA ICS 6	(1993) Enclosures for Industrial Control and Systems
NEMA LE 4	(1987) Recessed Luminaires, Ceiling Compatibility
NEMA MG 1	(1993; Rev 1-1993; Rev 2-1995) Motors and Generators

NEMA MG 10	(1994) Energy Management Guide for Selection and Use of Polyphase Motors
NEMA OS 1	(1989) Sheet-Steel Outlet Boxes, Device Boxes, Covers, and Box Supports
NEMA PB 1	(1990) Panelboards
NEMA WD 1	(1983; R 1989) General Requirements for Wiring Devices
NEMA WD 6	(1988) Wiring Devices - Dimensional Requirements

NATIONAL FIRE PROTECTION ASSOCIATION (NFPA)

NFPA 70	(1996) National Electrical Code
NFPA 101	(1997) Safety to Life from Fire in Buildings and Structures

RURAL ELECTRIFICATION ADMINISTRATION (REA)

REA TECM 823	(1980) Electrical Protection by Use of Gas Tube Arresters

UNDERWRITERS LABORATORIES (UL)

UL-03	(1995) Electrical Construction Materials Directory
UL 1	(1993; Rev thru Jan 1995) Flexible Metal Conduit
UL 6	(1993) Rigid Metal Conduit
UL 20	(1995) General-Use Snap Switches
UL 67	(1993; Rev thru Dec 1993) Panelboards
UL 83	(1991; Rev thru Oct 1994) Thermoplastic-Insulated Wires and Cables
UL 94	(1991; Rev thru Apr 1995) Tests for Flammability of Plastic Materials for Parts in Devices and Appliances
UL 98	(1994; R Feb 1995) Enclosed and Dead-Front Switches
UL 198E	(1988; Rev Jul 1988) Class R Fuses
UL 360	(1986; Rev thru Dec 1994) Liquid-Tight Flexible Steel Conduit
UL 467	(1993) Grounding and Bonding Equipment
UL 486A	(1991; Rev Oct 1991) Wire Connectors and Soldering Lugs for Use with Copper Conductors
UL 486C	(1991; Rev thru Sep 1992) Splicing Wire Connectors
UL 489	(1991; Rev thru Jun 1995) Molded-Case Circuit Breakers and Circuit-Breaker Enclosures

UL 497	(1995) Protectors for Paired Conductor Communication Circuits
UL 498	(1991; Rev thru Oct 1994) Attachment Plugs and Receptacles
UL 510	(1994) Insulating Tape
UL 512	(1993) Fuseholders
UL 514A	(1991; Rev Apr 1995) Metallic Outlet Boxes
UL 514B	(1992; Rev thru Apr 1995) Fittings for Conduit and Outlet Boxes
UL 542	(1994) Lampholders, Starters, and Starter Holders for Fluorescent Lamps
UL 797	(1993; Rev May 1995) Electrical Metallic Tubing
UL 869A	(1993; Rev Apr 1994) Reference Standard for Service Equipment
UL 924	(1995) Emergency Lighting and Power Equipment
UL 935	(1995; Rev Jun 1995) Fluorescent-Lamp Ballasts
UL 943	(1993; Rev thru Jan 1995) Ground-Fault Circuit Interrupters
UL 1004	(1994) Electric Motors
UL 1029	(1994; Rev Oct 1994) High-Intensity-Discharge Lamp Ballasts
UL 1570	(1988; Rev thru Mar 1995) Fluorescent Lighting Fixtures
UL 1571	(1991; Rev thru Mar 1995) Incandescent Lighting Fixtures
UL 1572	(1991; Rev thru Mar 1995) High Intensity Discharge Lighting Fixtures

1.2 GENERAL

1.2.1 Rules

The installation shall conform to the requirements of NFPA 70 and NFPA 101, unless more stringent requirements are indicated herein or shown.

1.2.2 Coordination

The drawings indicate the extent and the general location and arrangement of equipment, conduit, and wiring. The Contractor shall become familiar with all details of the work and verify all dimensions in the field so that the outlets and equipment shall be properly located and readily accessible. Lighting fixtures, outlets, and other equipment and materials shall be located to avoid interference with mechanical or structural features; otherwise, lighting fixtures shall be symmetrically located according to the room arrangement when uniform illumination is required, or asymmetrically located to suit conditions fixed by design and shown. Raceways, junction and outlet boxes, and lighting fixtures shall not be supported from sheet metal roof decks. If any conflicts occur necessitating departures from the drawings, details of and reasons for departures shall be submitted and approved prior to implementing any

change. The Electrical Contractor shall coordinate the electrical work with HVAC and electrical drawings and provide all power related wiring even if they are not shown on electrical drawings.

1.2.3 Special Environments

1.2.3.1 Weatherproof Locations

Wiring, Fixtures, and equipment in designated locations shall conform to NFPA 70 requirements for installation in damp or wet locations.

1.2.4 Standard Products

Material and equipment shall be a standard product of a manufacturer regularly engaged in the manufacture of the product and shall essentially duplicate items that have been in satisfactory use for at least 2 years prior to bid opening.

1.2.5 Identification Nameplates

Major items of electrical equipment and major components shall be permanently marked with an identification name to identify the equipment by type or function and specific unit number as indicated. Designation of motors shall coincide with their designation in the panel. Unless otherwise specified, all identification nameplates shall be made of laminated plastic in accordance with ASTM D 709 with black outer layers and a white core. Edges shall be chamfered. Plates shall be fastened with black-finished round-head drive screws, except motors, or approved nonadhesive metal fasteners. When the nameplate is to be installed on an irregular-shaped object, the Contractor shall devise an approved support suitable for the application and ensure the proper installation of the supports and nameplates. In all instances, the nameplate shall be installed in a conspicuous location. At the option of the Contractor, the equipment manufacturer's standard embossed nameplate material with black paint-filled letters may be furnished in lieu of laminated plastic. The front of each panelboard shall have a nameplate to indicate the phase letter, corresponding color and arrangement of the phase conductors. The following equipment, as a minimum, shall be provided with identification nameplates:

Minimum 1/4 inch High Letters	Minimum 1/8 inch High Letters
Panelboards	Control Power Transformers
Starters	Control Devices
Safety Switches	Transformers
Equipment Enclosures	Motors

1.2.6 As-Built Drawings

Upon completion of construction and prior to final inspection, the Contractor shall submit to the Contracting Officer two (2) sets of marked up (the Contractor shall use red ink for all annotations) contract drawings showing all changes and records. Final acceptance will not be accomplished until the As-Built drawings have been received and approved.

1.3 SUBMITTALS

Government approval is required for submittals with a "GA" designation; submittals having an "FIO" designation are for information only. The following shall be submitted in accordance with Section 01300 SUBMITTAL DESCRIPTIONS:

SD-04 Drawings

Electrical Work; GA.

Detail drawings for all materials and equipment specified. Detail drawings shall consist of a complete list of equipment and materials, including manufacturer's descriptive and technical data; catalog cuts; and any special installation instructions that may be required. Drawings shall show applicable schematic diagrams and equipment layout and anchorage. Telephone system drawings showing actual layout, including locations, type any gauge of cables, and terminal assignment of wiring, after installation.

SD-09 Reports

Materials and Equipment; GA.

The label or listing of the Underwriters Laboratories, Inc., shall be accepted as evidence that the materials or equipment conform to the applicable standards of that agency. In lieu of this label or listing, a statement from a nationally recognized, adequately equipped testing agency indicating that the items have been tested in accordance with required procedures and that the materials and equipment comply with all contract requirements will be accepted. Materials and equipment shall be approved based on the manufacturer's published data.

For other than equipment and materials specified to conform to UL publications, a manufacturer's statement indicating complete compliance with the applicable Federal Specification, or standard of the American Society for Testing and Materials, National Electrical Manufacturers Association, or other commercial standard, is acceptable.

SD-13 Certificates

Telephone Installer; GA.

Qualifications of the telephone installer.

1.4 WORKMANSHIP

Materials and equipment shall be installed in accordance with recommendations of the manufacturer and as shown.

PART 2 PRODUCTS

2.1 MATERIALS AND EQUIPMENT

Materials and equipment shall conform to the respective publications and other requirements specified below. Materials and equipment not listed below shall be as specified elsewhere in this section.

2.1.1 Conductors

Conductors shall be annealed copper with type THHN/THWN insulation conforming to UL 83.

2.1.1.1 Grounding Cables

Grounding cables shall have green low-voltage insulation.

2.1.1.2 Telephone Cables

ICEA S-80-576

2.1.2 Connector Blocks

Connector blocks shall be type 66 equipped with punch down clips.

2.1.3 Telephone Backboards

Backboards shall be 3/4 inch plywood having a two-coat insulating varnish finish.

2.1.4 Protector Modules

The protector modules shall be of the three-electrode gas tube type. Protection modules shall be medium duty as specified in REA TECM 823. The gas modules shall be fail-short and shall shunt high voltage to ground in less than 10 nanoseconds, shall have an external spark gap, and shall comply with UL 497.

2.1.5 Circuit Breakers

Circuit breakers shall have voltage, current and interrupting ratings as indicated. Fully rated circuit breakers shall be provided to obtain the specified interrupting rating.

2.1.5.1 Molded-Case and Insulated-Case Circuit Breakers

NEMA AB 1 and UL 489

a. Molded-Case Circuit Breakers: Single-pole breakers shall be full module size; two poles shall not be installed in a single module. Multipole breakers shall be of the common-trip type having a single operating handle, but for sizes of 100 amperes or less may consist of single-pole breakers permanently factory assembled into a multipole unit having an internal, mechanical, non-tamperable common-trip mechanism and external handle ties. Breakers shall have interchangeable, adjustable magnetic trips in 225 amperes frame and larger.

2.1.6 Conduit and Tubing

2.1.6.1 Electrical, Zinc-Coated Steel Metallic Tubing (EMT)

UL 797.

2.1.6.2 Flexible Conduit, Steel

General-purpose type, UL 1; liquid tight, UL 360.

2.1.6.3 Rigid Metal Conduit

UL 6.

2.1.7 Conduit and Device Boxes and Fittings

2.1.7.1 Boxes, Metallic Outlet

NEMA OS 1 and UL 514A.

2.1.7.2 Boxes, Switch (Enclosed), Surface-Mounted

UL 98.

2.1.7.3 Fittings for Conduit and Outlet Boxes

UL 514B.

2.1.8 Connectors, Wire Pressure

2.1.8.1 Copper Conductors

UL 486A.

2.1.9 Electrical Grounding and Bonding Equipment

UL 467.

2.1.9.1 Ground Rods

Ground rods shall be of copper-clad steel conforming to UL 467 not less than 3/4 inch in diameter 10 feet in length of the sectional type driven full length into the earth.

2.1.10 Enclosures

NEMA ICS 6 unless otherwise specified.

2.1.11 Fixtures, Lighting and Fixture Accessories/Components

Standard Drawing 40-06-04 sheets referenced hereinafter and enclosed as an integral part of these specifications and additional fixtures shown on contract drawings. Fixtures, accessories and components, including ballasts, lampholders, lamps, starters and starter holders, shall conform to industry standards specified below.

2.1.11.1 Fixture, Auxiliary or Emergency

UL 924.

2.1.11.2 Incandescent Fixture

NEMA LE 4 for ceiling compatibility of recessed fixtures and UL 1571.

2.1.11.3 Fluorescent

a. Fixture: NEMA LE 4 for ceiling compatibility of recessed fixtures and UL 1570. Fixtures shall be plainly marked for proper lamp and ballast type to identify lamp diameter, wattage, color and start type. Marking shall be readily visible to service personnel, but not visible from normal viewing angles.

c. Ballasts:

(1) Electronic Ballast. Electronic ballasts shall consist of a rectifier, high frequency inverter, and power control and regulation circuitry. The ballasts shall be UL listed, Class P, with a Class A sound rating and shall contain no PCBs. Ballasts shall meet 47 CFR 18 for electromagnetic interference and shall not interfere with the operation of other electrical equipment. Design shall withstand line transients per IEEE C62.41, Category A. Unless otherwise indicated, the minimum number of ballasts shall be used to serve each individual fixture, using one, two, three or four lamp ballasts. A single ballast may be used to serve multiple fixtures if they are continuous mounted, factory manufactured for that installation with an integral wireway and are identically controlled.

(a) Light output regulation shall be +/- 10%.
(b) Voltage input regulation shall be +/- 10%.
(c) Lamp current crest factor shall be no more than 1.7.
(d) Ballast factor shall be not less than 85% nor more than 100%, unless otherwise indicated.
(e) A 60 Hz filter shall be provided. Flicker shall be no more than 15% with any lamp suitable for the ballast.
(f) Ballast case temperature shall not exceed 25 degree celsius rise above 40 degree celsius ambient, when tested in accordance with UL 935.
(g) Input current third harmonic shall not exceed 32 percent total harmonic distortion or 27.5 percent of the third triplens.

(h) Power factor shall not be less than 0.9.
(i) Ballasts shall operate at a frequency of 20 KHz or more.
(j) Operating filament voltage shall be 2.5 to 4.5 volts.
(k) Warranty. Three year full warranty including a $10 labor allowance.
(l) Ballast Efficacy Factor (BEF) shall be in accordance with the following table. Ballasts and lamps shall be matching rapid start or instant start as indicated on the following table. If 32W-F32-T8 lamps and ballasts are used, they must be either all rapid start or all instant start.

ELECTRONIC FLUORESCENT BALLAST EFFICACY FACTORS

LAMP TYPE	TYPE OF STARTER LAMP	NOMINAL OPERATIONAL INPUT VOLTAGE	NUMBER OF LAMPS	MIN. BALLAST EFFICACY FACTOR
32W F32 T8	rapid or instant start	120 V	1	2.4
			2	1.4
			3	1.0
			4	0.8

The BEF is calculated using the formula:

BEF Ballast Factor (in percent) / Power Input

Where Power Input Total Wattage of Combined Lamps and Ballasts.

c. Lampholders, Starters, and Starter Holders: UL 542.

2.1.11.4 High-Intensity-Discharge

a. Fixture: UL 1572.

b. Ballasts: ANSI C82.4 for multiple supply types and UL 1029.

2.1.12 Fuses and Fuseholders

2.1.12.1 Fuses, Low Voltage Cartridge Type

NEMA FU 1.

2.1.12.2 Fuses, Class R

UL 198E.

2.1.12.3 Fuseholders

UL 512.

2.1.13 Motors, ac, Fractional and Integral

Motors, ac, fractional and integral shall conform to NEMA MG 1 and UL 1004 and NEMA MG 10 for energy management selection of polyphase motors.

2.1.13.1 Rating

The horsepower rating of motors should be limited to no more than 125 percent of the maximum load being served unless a NEMA standard size does not fall within this range. In this case, the next larger NEMA standard motor size should be used.

2.1.13.2 Motor Efficiencies

All permanently wired polyphase motors of 1 hp or more shall meet the minimum full-load efficiencies as indicated in the following table, and as specified in this specification. Motors of 1 hp or more with open, dripproof or totally enclosed fan cooled enclosures shall be high efficiency type, unless otherwise indicated. Motors provided as an integral part of motor driven equipment are excluded from this requirement if a minimum seasonal or overall efficiency requirement is indicated for that equipment by the provisions of another section.

Minimum Motor Efficiencies

HP	High Efficiency
1	85.5
1.5	85.5
2	85.5
3	88.5
5	88.5
7.5	90.0
10	90.0
15	91.0
20	92.0
25	92.0

2.1.14 Motor Controls and Motor Control Centers

NEMA ICS 1, NEMA ICS 2, NEMA ICS 3 and NEMA ICS 6.

2.1.15 Panelboards

Dead-front construction, NEMA PB 1 and UL 67.

2.1.16 Receptacles

2.1.16.1 Standard Grade

UL 498.

2.1.16.2 Ground Fault Interrupters

UL 943, Class A or B.

2.1.17 Service Equipment

UL 869A.

2.1.18 Splice, Conductor

UL 486C.

2.1.19 Snap Switches

UL 20.

2.1.20 Tapes

2.1.20.1 Plastic Tape

UL 510.

2.1.20.2 Rubber Tape

UL 510.

2.1.21 Wiring Devices

NEMA WD 1 for general-purpose wiring devices, and NEMA WD 6 for dimensional requirements of wiring devices.

2.1.22 Telephone Outlets

47 CFR 68, plastic shall be class VO in accordance with UL 94. Outlets shall be integral cover/jacks having two jacks configured to fit a single-gang outlet box.

2.2 PUBLIC ADDRESS SYSTEM

Equipment to be provided and installed by this contract includes conduit, conductors, and speakers as indicated on the plans and as specified herein. The public address system is to be relocated from Fire Station No. 3 by the government following completion of this project. The contractor shall verify that all equipment installed is fully compatible with the existing system to be relocated.

2.3.1 Loudspeakers

2.3.1.1 Cone Speaker

Cone speakers shall as a minimum conform to the following specifications:

Application:	Ceiling
Frequency range:	30 to 20,000 Hz
Power Rating:	Normal - 15 watts Peak - 20 watts
Voice Coil Impedance:	8 ohms
Line Matching Transformer:	70 volt input
Capacity:	2 watts
Magnet:	8 ounces or greater
Primary Taps:	0.5, 1, 2, and 4 watts
Primary Impedance:	70 volts - 10k, 5k, 2.5k, and 1.25k ohms
Frequency Response:	30 - 20,000 Hz
Insertion Loss:	Less than 1 dB

2.3.2 Horn Speaker

Horn speakers shall as a minimum conform to the following specifications:

Application:	Weatherproof
Frequency Response:	275 - 14,000 Hz
Power Taps:	70 volt line - .9, 1.8, 3.8, 7.5, and 15 watts
Impedance:	5000, 2500, 1300, 670, 330, 90, and 45 ohms
Power Rating:	Normal - 15 watts Peak - 20 watts

2.4 CABLE

Cables shall be of the gauge required depending upon the cable run length. In no case shall any cable be used which is smaller than 20 AWG. Insulation on the conductors shall be polyvinyl chloride (PVC) or an equivalent synthetic thermoplastic not less than .009 inch. Cables shall be shielded with a 34-gauge tinned soft copper strand formed into a braid. Cables shall be jacketed with a PVC compound. The jacket thickness shall be 0.0200 inch minimum.

PART 3 EXECUTION

3.1 GROUNDING

Grounding shall be in conformance with NFPA 70, the contract drawings, and the following specifications.

3.1.1 Service Grounding

Ground building electrical service by bonding to foundation reinforcing steel in accordance with NFPA 70 Section 250-81(c). The resistance to ground shall be measured using the fall-of-potential method described in IEEE Std 81. If a maximum resistance of 25 ohms cannot be obtained under normally dry conditions, drive 2 additional ground rods not less than 6 feet on centers bonded to the system ground wire. In high ground resistance, UL listed chemically charged ground rods may be used. If the resultant resistance exceeds 25 ohms measured not less than 48 hours after rainfall, the Contracting Officer shall be notified immediately. Connections below grade shall be fusion welded. Connections above grade shall be fusion welded or shall use UL 467 approved connectors.

3.1.2 Grounding Conductors

A green insulated ground wire shall be furnished for all 60Hz AC power circuits regardless of the type of conduit. All equipment grounding conductors, including metallic raceway systems used as such, shall be bonded or joined together in each wiring box or equipment enclosure. Insure that all metallic raceways and grounding conductors are actually wired or bonded into a common junction. Metallic boxes and enclosures, if used, shall also be bonded to these grounding conductors by an approved means per NFPA 70. When boxes for receptacles, switches, or other utilization devices are installed, any designated grounding terminal on these devices shall also be bonded to the equipment grounding conductor junction with a short jumper.

3.2 WIRING METHODS

3.2.1 General Requirements

Unless otherwise indicated, wiring shall consist of insulated conductors installed in rigid zinc-coated steel conduit, rigid plastic conduit or electrical metallic tubing. Wiring located exposed on exterior surfaces shall be enclosed in rigid zinc coated steel conduit. Conduit trade sizes larger than 2" shall be rigid-zinc coated steel. Wiring located underground shall be rigid plastic conduit. Conduit located in interior locations trade sizes less than 2" shall be electrical metallic tubing.

3.2.2 Conduit and Tubing Systems

Conduit and tubing systems shall be installed as indicated. Conduit sizes shown are based on use of copper conductors with insulation types as described in paragraph WIRING METHODS. Minimum size of raceways shall be 1/2 inch. Electrical metallic tubing may be installed only within buildings. Electrical metallic tubing may be installed in concrete and grout in dry locations. Electrical metallic tubing installed in concrete

or grout shall be provided with concrete tight fittings. EMT shall not be installed in damp or wet locations, or the air space of exterior masonry cavity walls. Bushings, manufactured fittings or boxes providing equivalent means of protection shall be installed on the ends of all conduits and shall be of the insulating type, where required by NFPA 70. Only UL listed adapters shall be used to connect EMT to rigid metal conduit, cast boxes, and conduit bodies. Penetrations of above grade floor slabs, time-rated partitions and fire walls shall be firestopped in accordance with Section 07270 FIRESTOPPING. Raceways shall not be installed under the firepits of boilers and furnaces and shall be kept 6 inches away from parallel runs of flues, steam pipes and hot-water pipes. Raceways shall be concealed within finished walls, ceilings, and floors unless otherwise shown. Raceways crossing structural expansion joints shall be provided with suitable expansion fittings or other suitable means to compensate for the building expansion and contraction and to provide for continuity of grounding.

3.2.2.1 Exposed Raceways

Exposed raceways shall be installed parallel or perpendicular to walls, structural members, or intersections of vertical planes and ceilings. Raceways under raised floors and above accessible ceilings shall be considered as exposed installations in accordance with NFPA 70 definitions.

3.2.2.2 Changes in Direction of Runs

Changes in direction of runs shall be made with symmetrical bends or cast-metal fittings. Field-made bends and offsets shall be made with an approved hickey or conduit-bending machine. Crushed or deformed raceways shall not be installed. Trapped raceways in damp and wet locations shall be avoided where possible. Care shall be taken to prevent the lodgment of plaster, dirt, or trash in raceways, boxes, fittings and equipment during the course of construction. Clogged raceways shall be entirely freed of obstructions or shall be replaced.

3.2.2.3 Supports

Metallic conduits and tubing shall be securely and rigidly fastened in place at intervals of not more than 10 feet and within 3 feet of boxes, cabinets, and fittings, with approved pipe straps, wall brackets, conduit clamps, conduit hangers, threaded C-clamps, or ceiling trapeze. C-clamps or beam clamps shall have strap or rod-type retainers. Loads and supports shall be coordinated with supporting structure to prevent damage or deformation to the structures, but no load shall be applied to joist bridging. Fastenings shall be by toggle bolts on hollow masonry units; by expansion bolts on concrete or brick; by machine screws, welded threaded studs, heat-treated or spring-steel-tension clamps on steel work. Nail-type nylon anchors or threaded studs driven in by a powder charge and provided with lock washers and nuts may be used in lieu of expansion bolts or machine screws. Raceways or pipe straps shall not be welded to steel structures. In partitions of light steel construction, sheet-metal screws may be used. Conduit shall not be supported using wire or nylon ties. Raceways shall be installed as a complete system and be independently supported from the structure. Upper raceways shall not be the support of lower raceways. Supporting means will not be shared between electrical raceways and mechanical piping or ducts and shall not be fastened to hung ceiling supports. Conduits shall be fastened to all sheet-metal boxes and cabinets with two locknuts where required by the NFPA 70, where insulating bushings are used, and where bushings cannot be brought into firm contact with the box; otherwise, a single locknut and bushing may be used. Indenter and set-screw fitting shall not be used. A nylon pull rope shall be inserted in each empty raceway in which wiring is to be installed by others if the raceway is more than 50 feet in length and contains more than the equivalent of two 90-degree bends, or where the raceway is more than

150 feet in length. Not less than 10 inches of slack shall be left at each end of the pull rope. Additional support for horizontal runs is not required when EMT rests on steel stud cutouts.

3.2.2.4 Communications and Cable Television Raceways

Communications raceways indicated shall be installed in accordance with the previous requirements for conduit and tubing and with the additional requirements that no length of run shall exceed 50 feet for 3/4 inch sizes, and 100 feet for 1 inch or larger sizes, and shall not contain more than two 90-degree bends or the equivalent. Additional pull or junction boxes shall be installed to comply with these limitations whether or not indicated. Inside radii of bends in conduits 1 inch size or larger shall be not less than ten times the nominal diameter.

3.2.3 Cables and Conductors

3.2.3.1 Sizes

Sizes shall be not less than indicated. Branch-circuit conductors shall be not smaller than No. 12 AWG. Class 1 remote control and signal circuit conductors shall be not less than No. 14 AWG. Class 2 remote control and signal circuit conductors shall be not less than No. 16 AWG.

3.2.3.2 Power Conductor Identification

Phase conductors shall be identified by color coding. The color of the insulation on phases A, B, and C respectively shall be as follows:

120/208 volt, 3-phase: Black, red, and blue.

Conductor phase and voltage identification shall be made by color-coded insulation for all conductors smaller than No. 6 AWG. For conductors No. 6 AWG and larger, identification shall be made by color-coded insulation, or conductors with black insulation may be furnished and identified by the use of half-lapped bands of colored electrical tape wrapped around the insulation for a minimum of 3 inches of length near the end, or other method as submitted by the Contractor and approved by the Contracting Officer. Conductor identification shall be provided within each enclosure where a tap, splice, or termination is made. Phase identification by a particular color shall be maintained continuously for the length of a circuit, including junctions.

3.2.3.3 Control Conductor Identification

Control circuit conductor identification shall be made by color-coded insulated conductors, plastic-coated self-sticking printed markers, permanently attached stamped metal foil markers, or equivalent means as approved. Control circuit terminals of equipment shall be properly identified. Terminal and conductor identification shall match that shown on approved detail drawings. Hand lettering or marking is not acceptable.

3.3 BOXES AND SUPPORTS

Boxes shall be provided in the wiring or raceway systems wherever required for pulling of wires, making connections, and mounting of devices or fixtures. Boxes for metallic raceways, 4 by 4 inch nominal size and smaller, shall be of the cast-metal hub type when located in normally wet locations or when flush and surface mounted on outside of exterior surfaces. Boxes in other locations shall be sheet steel. In partitions of light steel construction bar hangers with 1 inch long studs, mounted between metal wall studs or metal stud "C" brackets snapped on and tab-locked to metal wall studs, shall be used to secure boxes to the building structure. When "C" brackets are used, additional box support shall be provided on the side of the box opposite the brackets. The edges of boxes for electrical devices shall be flush with the finished surfaces

in gypsum and plasterboard installations. Boxes for mounting lighting fixtures shall be not less than 4 inches square except smaller boxes may be installed as required by fixture configuration, as approved. Boxes installed for concealed wiring shall be provided with suitable extension rings or plaster covers, as required. The bottom of boxes installed in masonry-block walls for concealed wiring shall be flush with the top of a block to minimize cutting of blocks, and boxes shall be located horizontally to avoid cutting webs of block. Indicated elevations are approximate, except where minimum mounting heights for hazardous areas are required by NFPA 70. Unless otherwise indicated, boxes for wall switches shall be mounted 48 inches above finished floors. Switch and outlet boxes on opposite sides of fire rated walls shall be separated by a minimum horizontal distance of 24 inches. Cast-metal boxes installed in wet locations and boxes installed flush with the outside of exterior surfaces shall be gasketed. Separate boxes shall be provided for flush or recessed fixtures when required by the fixture terminal operating temperature, and fixtures shall be readily removable for access to the boxes unless ceiling access panels are provided. Boxes and supports shall be fastened with bolts and metal expansion shields on concrete or brick, with toggle bolts on hollow masonry units, and with machine screws or welded studs on steel work. Threaded studs driven in by powder charge and provided with lockwashers and nuts, or nail-type nylon anchors may be used in lieu of expansion shields, or machine screws. In open overhead spaces, cast-metal boxes threaded to raceways need not be separately supported except where used for fixture support; cast-metal boxes having threadless connectors and sheet metal boxes shall be supported directly from the building structure or by bar hangers. Hangers shall not be fastened to or supported from joist bridging. Cast-metal boxes with 3/32 inch wall thickness are acceptable. Where bar hangers are used, the bar shall be attached to raceways on opposite sides of the box and the raceway shall be supported with an approved type fastener not more than 24 inches from the box.

3.3.1 Boxes for Use with Raceway Systems

Boxes for use with raceway systems shall be not less than 1-1/2 inches deep except where shallower boxes required by structural conditions are approved. Sheetmetal boxes for other than lighting fixtures shall be not less than 4 inches square except that 4 by 2 inch boxes may be used where only one raceway enters the outlet. Contractor shall size the telephone outlet boxes as required by the number, size and type of outlets specified and as required by the outlets furnished by the Contractor.

3.3.2 Pull Boxes

Pull boxes of not less than the minimum size required by NFPA 70 shall be constructed of galvanized sheet steel, except where cast-metal boxes are required in locations specified above. Boxes shall be furnished with screw-fastened covers. Where several feeders pass through a common pull box, the feeders shall be tagged to indicate clearly the electrical characteristics, circuit number, and panel designation.

3.4 DEVICE PLATES

One-piece type device plates shall be provided for all outlets and fittings. Plates on unfinished walls shall be brushed stainless steel. Plates on finished walls shall be of steel with baked enamel finish or impact-resistant plastic and shall be ivory. Screws shall be of metal with countersunk heads, in a color to match the finish of the plate. Plates shall be installed with all four edges in continuous contact with finished wall surfaces without the use of mats or similar devices. Plaster fillings will not be permitted. Plates shall be installed with an alignment tolerance of 1/16 inch. The use of sectional-type device plates will not be permitted. Plates installed in wet locations shall be gasketed and provided with a hinged, gasketed cover, in accordance with NEC Section 410-57(b) unless otherwise specified.

3.5 RECEPTACLES

3.5.1 Duplex

Duplex receptacles shall be rated 20 amperes, 125 volts, two-pole, three-wire, grounding type with polarized parallel slots. Bodies shall be of black or ivory to match color of switch handles in the same room or to harmonize with the color of the respective wall, and supported by mounting strap having plaster ears. Contact arrangement shall be such that contact is made on two sides of an inserted blade. Receptacle shall be side- or back-wired with two screws per terminal. The third grounding pole shall be connected to the metal mounting yoke. Receptacles with ground fault circuit interrupters shall have the current rating as indicated, and shall be UL Class A type unless otherwise shown. Ground fault circuit interrupters shall be provided as required by NFPA 70 and as indicated on the drawings.

3.5.2 Weatherproof Applications

Weatherproof receptacles shall be suitable for the environment, damp or wet as applicable, and the housings shall be labeled to identify the allowable use. Receptacles shall be marked in accordance with UL 514A for the type of use indicated; "Damp locations", "Wet Locations", "Wet Location Only When Cover Closed". Assemblies shall be installed in accordance with the manufacturer's recommendations.

3.5.2.1 Wet Locations

Receptacles in wet locations shall be installed in an assembly rated for such use whether the plug is inserted or withdrawn, unless otherwise indicated. In a duplex installation, the receptacle cover shall be configured to shield the connections whether one or both receptacles are in use.

3.6 WALL SWITCHES

Wall switches shall be of the totally enclosed tumbler type. The wall switch handle and switch plate color shall harmonize with the color of the respective wall. Wiring terminals shall be of the screw type or of the solderless pressure type having suitable conductor-release arrangement. Not more than one switch shall be installed in a single-gang position. Switches shall be rated 20-ampere 120-volt for use on alternating current only.

3.7 SERVICE EQUIPMENT

Service-disconnecting means shall be of the enclosed molded-case circuit breaker type as indicated with external handle for manual operation. When service disconnecting means is a part of an assembly, the assembly shall be listed as suitable for service entrance equipment. Enclosures shall be sheet metal with hinged cover for surface mounting unless otherwise indicated.

3.8 PANELBOARDS

3.8.1 Construction and Materials

All panelboards shall be circuit breaker equipped. Panelboard busses shall be copper with minimum ampere ratings as indicated. All panelboards shall have copper ground busses. Panelboard neutral busses shall be minimum 100% rated unless otherwise indicated. Equipment ground busses shall be adequate for feeder and branch-circuit equipment grounding conductors and shall be bonded to the box. Panelboards shall be provided with characteristics, ratings, and accessories as indicated.

3.8.2 Enclosures

Cabinets shall be flush or surface mounted as indicated. Enclosures shall NEMA Type 1, unless otherwise indicated. Cabinets shall be galvanized steel with knock-outs at top and bottom. Panelboard fronts shall be secured to box with concealed trim clamps. Fronts for surface-mounted panelboards shall be the same dimensions as the box. Finish shall be gray baked enamel electrodeposited over clean phosphatized steel. Enclosures shall be provided with flush locks. All panelboards shall be keyed alike. A metal directory frame shall be provided. The frame shall be mounted inside each panel door. A typewritten directory shall be provided for each panelboard with each circuit properly identified to show the specific items and area in which the items are located. Main and neutral lugs shall be mechanical type, UL listed for use with size and type of conductors to be terminated. Where spaces are indicated, provide mounting brackets, bus connections, and necessary appurtenances for the installation of future devices.

3.8.3 Circuit Breakers.

Circuit breakers shall be thermal magnetic molded case. Circuit breakers shall be bolt-on type except circuit breakers 225-ampere frame size and greater may be plug-in type where individual positive locking device requires mechanical release for removal. Cases shall be constructed of a glass-reinforced insulating material that provides high dielectric strength. Current carrying components shall be isolated from the handle and accessory mounting area. The handle position shall indicate whether the circuit breaker is OFF, ON or TRIPPED. Circuit breakers shall include common tripping of all poles. Field fabricated multi-pole breakers by use of handle ties are not acceptable. Circuit breakers shall be fully tested, UL Listed, CSA certified and IEC rated for reverse connection without restrictive LINE or LOAD markings. Factory and/or field installed lugs shall be mechanical type, UL Listed to accept solid or stranded conductors. Lugs shall be listed for use at maximum allowable temperature per UL 489. Circuit breakers shall be provided with a permanent trip unit which contains a factory preset thermal trip element and a magnetic trip element in each pole. The thermal trip element shall be rms sensing. For circuit breakers larger than 100A, the magnetic trip element shall be field adjustable. A single adjustment shall simultaneously adjust the instantaneous trip point in each pole. Shunt trip equipped circuit breakers shall be provided where indicated. Shunt trip coils shall be compatible with the equipment to which they are being reconnected. Circuit breakers shall have voltage, current, and interrupting ratings as indicated. Circuit breakers shall be fully rated to obtain the specified interrupting rating; use of series ratings to obtain specified interrupting rating will not be acceptable.

3.9 FUSES

Equipment provided under this contract shall be provided with a complete set of properly rated fuses when the equipment manufacturer utilize fuses in the manufacture of the equipment, or if current-limiting fuses are required to be installed to limit the ampere-interrupting capacity of circuit breakers or equipment to less than the maximum available fault current at the location of the equipment to be installed. Fuses shall have a voltage rating of not less than the phase-to-phase circuit voltage, and shall have the time-current characteristics required for effective power system coordination.

3.9.1 Cartridge Fuses; Current-Limiting Type

Cartridge fuses, current-limiting type, Class RK5 shall have tested interrupting capacity not less than 100,000 amperes. Fuse holders shall be the type that will reject all Class H fuses.

3.10 UNDERGROUND SERVICE

Unless otherwise indicated, interior conduit systems shall be stubbed out 5 feet beyond the building wall and 2 feet below finished grade, for interface with the exterior service lateral conduits and exterior communications conduits. Outside conduit ends shall be bushed and capped, or plugged until connected to exterior conduit systems. Underground service lateral conductors will be extended to building service entrance and terminated in accordance with the requirements of Section 16375 ELECTRICAL DISTRIBUTION SYSTEM, UNDERGROUND and NFPA 70.

3.11 MOTORS AND MOTOR CONTROL

Motors shall be as specified in paragraph Motors, ac, Fractional and Integral Horsepower, whether or not motors are separately provided or included in equipment assemblies specified in other sections of these specifications. Each motor shall conform to the hp and voltage ratings indicated, and shall have a service factor and other characteristics that are essential to the proper application and performance of the motors under conditions shown or specified. Unless otherwise specified, all motors shall have open frames, and continuous-duty classification based on a 40 degree C ambient temperature reference. Polyphase motors shall be squirrel-cage type, having normal-starting-torque and low-starting-current characteristics, unless other characteristics are specified in other sections of these specifications or shown on contract drawings. The Contractor shall be responsible for selecting the actual horsepower ratings and other motor requirements necessary for the applications indicated. When electrically driven equipment furnished under other sections of these specifications materially differs from the design, the Contractor shall make the necessary adjustments to the wiring, disconnect devices and branch-circuit protection to accommodate the equipment actually installed at no additional cost to the Government. Each motor or group of motors requiring a single control shall be provided under other sections of these specifications with a suitable controller and devices that will perform the functions as specified for the respective motors. Each motor of 1/8 HP or larger shall be provided with thermal-overload protection. Polyphase motors shall have overload protection in each ungrounded conductor. The overload protection device shall be provided either integral with the motor or controller, or shall be mounted in a separate enclosure. Unless otherwise specified the protective device shall be of the manually reset type.

3.11.1 Contacts

Contacts in miscellaneous control devices such as float switches, pressure switches, and auxiliary relays shall have current and voltage ratings in accordance with NEMA ICS 2 for rating designation B300.

3.12 MOTOR STARTERS

3.12.1 General

Full voltage, nonreversing, across-the-line magnetic controllers shall be provided.

3.12.2 Overload Relays

Overload relays shall be ambient-compensated type with inverse-time-current characteristics. Heaters or sensors shall be provided in each phase and shall be matched to the nameplate full-load current of the specific motor being controlled. Appropriate adjustments shall be made for duty cycle.

3.12.3 Enclosure

NEMA 1 unless otherwise indicated.

3.12.4 Auxiliary Devices

Auxiliary control devices shall be provided as indicated on the contract drawings. Devices shall be factory installed in controller enclosure except as otherwise indicated. Pilot lights and selector switches shall be heavy-duty type. Control relays shall be adjustable time-delay relays. Selector switches shall be three position labeled "Hand-Off-Automatic". A red pilot light shall be included.

3.13 CONTACTS

Contacts in miscellaneous control devices shall have current and voltage ratings in accordance with NEMA ICS 2 for rating designation B300.

3.14 MOTOR-DISCONNECT MEANS

Each motor shall be provided with a disconnecting means when required by NFPA 70 even though not indicated. For single-phase motors, a single or double pole toggle switch, rated only for alternating current, will be acceptable for capacities less than 30 amperes, provided the ampere rating of the switch is at least 125 percent of the motor rating. Switches shall disconnect all ungrounded conductors.

3.14.1 Safety Disconnect Switches

Disconnect switches shall be horsepower rated for motor served, heavy duty type. Provide fused switches where indicated. Disconnect switches located indoors shall be NEMA 1 rated, surface mounted. Disconnect switches located outdoors shall be NEMA 3R rated, surface mounted. Fuses shall be dual element time delay, size and voltage as recommended by the equipment manufacturer.

3.15 LAMPS AND LIGHTING FIXTURES

Ballasted fixtures shall have ballasts which are compatible with the specific type and rating of lamps indicated and shall comply with the applicable provisions of the publications referenced.

3.15.1 Lamps

Lamps of the type, wattage, and voltage rating indicated shall be delivered to the project in the original cartons and installed in the fixtures just prior to the completion of the project.

3.15.1.1 Incandescent

Incandescent lamps shall be for 125-volt operation unless otherwise indicated.

3.15.1.2 Fluorescent

Fluorescent lamps for electronic ballasts shall be F32T8 as indicated on the fixture schedule in the contract drawings.

3.15.1.3 High-Intensity-Discharge

High-intensity-discharge lamps shall be the high-pressure sodium type unless otherwise indicated, shown, or approved.

3.15.2 Fixtures

Fixtures shall be as shown and shall conform to the following specifications and shall be as detailed on Standard Drawing No. 40-06-04, Sheet Nos. 9,16,17,19,20,30,31,36,51,56 which accompany and form a part of this specification for the types indicated. Illustrations shown on these sheets are indicative of the general type desired and are not intended to

restrict selection to fixtures of any particular manufacturer. Fixtures of similar designs and equivalent energy efficiency, light distribution and brightness characteristics, and of equal finish and quality will be acceptable if approved.

3.15.2.1 Accessories

Accessories such as straps, mounting plates, nipples, or brackets shall be provided for proper installation. Open type fluorescent fixtures with exposed lamps shall have a wire-basket type guard.

3.15.2.2 Suspended Fixtures

Suspended fixtures shall be provided with swivel hangers in order to ensure a plumb installation. Pendants, rods, or chains 4 feet or longer excluding fixture, shall be braced to limit swinging. Bracing shall be 3 directional, 120 degrees apart. Multiple unit or continuous-row fluorescent units shall have a tubing or stem for wiring at one point, and a tubing or rod suspension provided for each length of chassis including one at each end. Maximum distance between adjacent tubing or stems shall be 10 feet. Rods shall be of not less than 3/16 inch diameter. Flexible raceway shall be installed to each fixture from an overhead junction box. Fixture to fixture wiring installation is allowed only when fixtures are installed end to end in a continuous run.

3.15.2.3 Ceiling Fixtures

Ceiling fixtures shall be coordinated with and suitable for installation in, on, or from the suspended ceiling provided under other sections of these specifications. Installation and support of fixtures shall be in accordance with the NFPA 70 and manufacturer's recommendations. Recessed fixtures shall have adjustable fittings to permit alignment with ceiling panels. Recessed fixtures installed in fire-resistive type of suspended ceiling construction shall have the same fire rating as the ceiling or shall be provided with fireproofing boxes having materials of the same fire rating as the ceiling panels, in conformance with UL-03. Surface-mounted fixtures shall be suitable for fastening to the structural support for ceiling panels.

3.15.2.4 Sockets

Sockets of industrial, strip, and other open type fluorescent fixtures shall be of the type requiring a forced movement along the longitudinal axis of the lamp for insertion and removal of the lamp.

3.16 EQUIPMENT CONNECTIONS

All wiring not furnished and installed under other sections of the specifications for the connection of electrical equipment as indicated on the drawings shall be furnished and installed under this section of the specifications. Connections shall comply with the applicable requirements of paragraph WIRING METHODS. Flexible conduits 6 feet or less in length shall be provided to all electrical equipment subject to periodic removal, vibration, or movement and for all motors. All motors shall be provided with separate grounding conductors. Liquid-tight conduits shall be used in damp or wet locations.

3.17 TELEPHONE WIRING SYSTEM

The telephone wiring system shall be complete and functional.

3.17.1 Telephone Cables

Each telephone outlet will be serviced with 24-gauge solid copper station-type color coded cable, vinyl insulated with an overall vinyl jacket. Cable shall be continuous from each telephone outlet to backboard indicated on the drawings. Splicing of individual cables shall not be permitted. At each outlet, four-pair cable shall be terminated on the modular jack assembly, using color code provided by the Contracting Officer. Final cable connections at the backboard shall be made by others.

3.17.2 Telephone Outlets

Modular telephone outlets shall comply with FCC Rules and Regulations, Part 68, Subpart F. Each modular outlet shall have number of modular jacks indicated. Each eight-position jack in the modular outlet shall contain screw terminals or approved quick connect terminals for each conductor in the cable. The flush mounted cover shall be ivory. Each outlet shall be numbered for easy identification of type and location.

3.17.3 Crossconnect Blocks

Punch down 66 type connecting blocks shall be provided to terminate 300 pair service cable (installed and terminated by others). The blocks shall be attached to right side of the plywood telephone backboard in vertical rows.

3.17.4 Telephone Backboards

Telephone backboards shall be installed at locations shown on the drawings. The backboards shall be 3/4-inch plywood having a two-coat insulating varnish finish and shall be sized as shown on the drawings.

3.17.5 Building Entry Protection Modules

Building entry protection modules shall be provided to terminate the service cable (installed and terminated by others). The modules shall be attached to the left side of the telephone backboard.

3.17.6 Telephone System Grounding

Ground telephone system as indicated on the drawings.

3.17.7 Auxiliary Devices

All auxiliary devices such as tie bars, cable rings, etc. which are not shown but are required for a high grade installation shall be provided.

3.17.8 Qualifications of Installer

The system shall be installed by an experienced installer regularly engaged in the installation of telephone systems. The Contracting Officer may reject any proposed installer who can not show evidence of such qualifications.

3.18 PUBLIC ADDRESS SYSTEM

3.18.1 INSTALLATION

All equipment shall be installed as indicated and specified, and in accordance with the manufacturer's recommendations except where otherwise indicated. Equipment mounted out-of-doors or subject to inclement conditions shall be weatherproofed.

3.18.1.1 Wiring

Wiring shall be installed in electric metallic tubing. Speaker, grounding, and line level wiring and power cables shall be isolated from each other by physical isolation and metallical shielding. Shielding shall be terminated at only one end.

3.18.2 GROUNDING

All grounding practices shall comply with NFPA 70.

3.18.3 ACCEPTANCE TESTS

After installation has been completed, the Contractor shall conduct acceptance tests, utilizing approved test procedures, to demonstrate that equipment operates in accordance with specification requirements. The Contractor shall notify the Contracting Officer a minimum or 7 days prior to the performance of tests.

3.19 PAINTING AND FINISHING

Field-applied paint on exposed surfaces shall be provided under Section 09900 PAINTING, GENERAL.

-- End of Section --

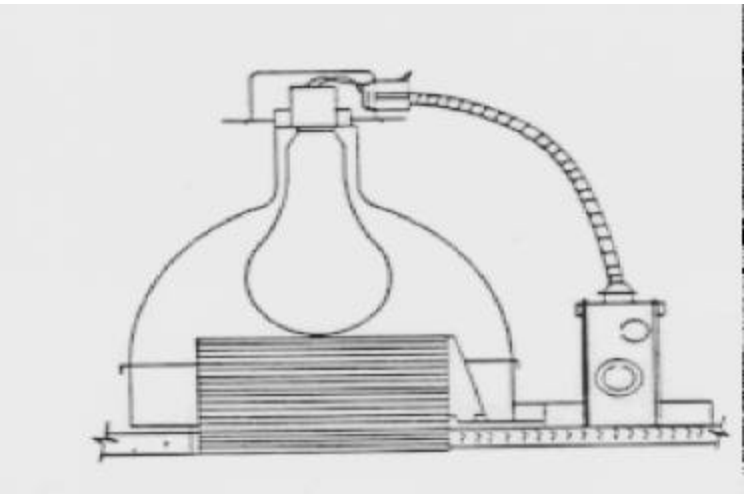

TYPE 116

Recessed Round Incandescent Downlight

Fixture shall conform to UL 1571. Fixture shall have thermal protection or shall be UL listed as suitable for use in direct contact with insulation. Fixture shall be rated for a 200 watt lamp. The mounting plate shall be steel. The reflector shall be highly polished aluminum. The baffle shall be black, constructed of aluminum, and multigrooved for low brightness. The baffle shall be securely attached to the fixture housing and shall be easily removed without the use of tools. Fixture shall be provided with a through wiring junction box and shall be prewired.

Fixture type indicated on this sheet shall also conform to requirements specified and indicated in the contract documents.

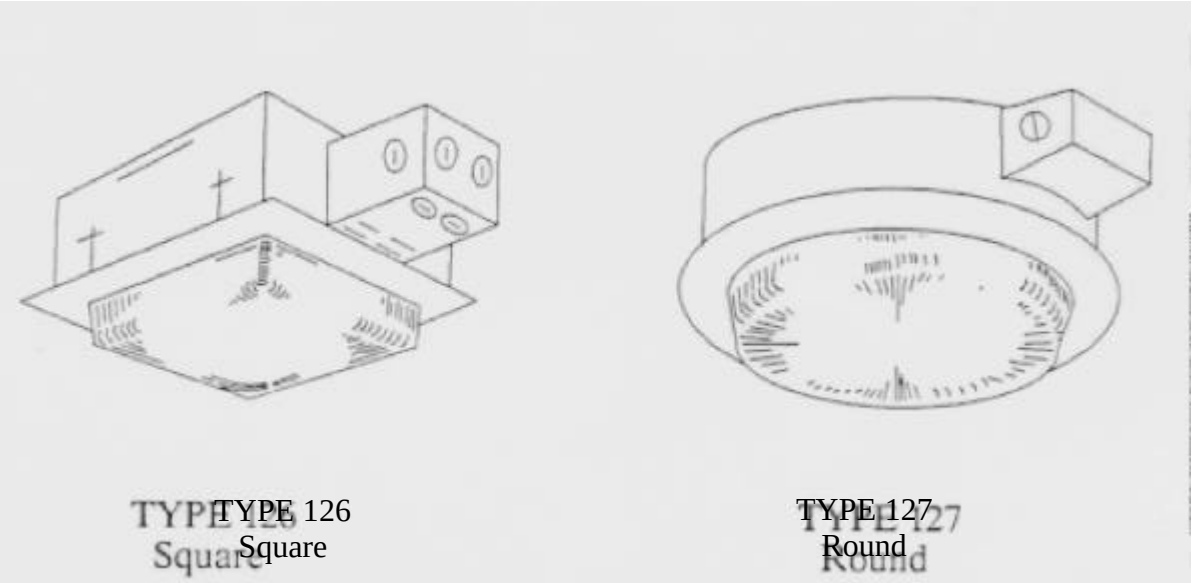

Weathertight, Insect-proof, Recessed Incandescent Fixture

First Suffix	Second Suffix	Description
		Drop white opal glass lens
A		Flat prismatic glass lens
		Suspended plaster installation
		Concrete pour installation

Fixture shall conform to UL 1571 for use in wet locations and shall be enclosed and gasketed. Fixture shall be suitable for installation in outdoor soffitts. The housing shall be 18 gage hot-dipped galvanized steel and shall have sealed seam construction. The housing for suspended plaster installation shall be provided with hot-dipped galvanized steel sheet metal splice compartment and plaster frame. The housing for concrete pour installation shall be provided with a cast aluminum splice compartment. The interior surfaces of the housing shall be finished with baked white enamel. The reflector shall be one piece specular aluminum. The lampholder shall be medium base glazed porcelain. The lens frame shall be one piece cast aluminum with a 1/8-inch minimum wall thickness. The lens frame shall have a brushed satin aluminum finish and be provided with a clear acrylic lacquer protective coating. The lens frame shall be held securely to the fixture housing with a hinge and self-centering captive screws or with a chain-hinge and four self-centering captive screws. A round neoprene factory installed gasket shall be provided between the lens frame and the ceiling. A flat gasket shall be provided between the lens frame and the glass diffuser. The glass lens shall have a minimum thickness of 1/4 inch. The lens shall be held securely to the lens frame and gasket with steel clips and screws. Fixture shall be prewired. Fixture shall be rated for a 150 watt lamp.

Fixture types indicated on this sheet shall also conform to requirements specified and indicated in the contract documents.

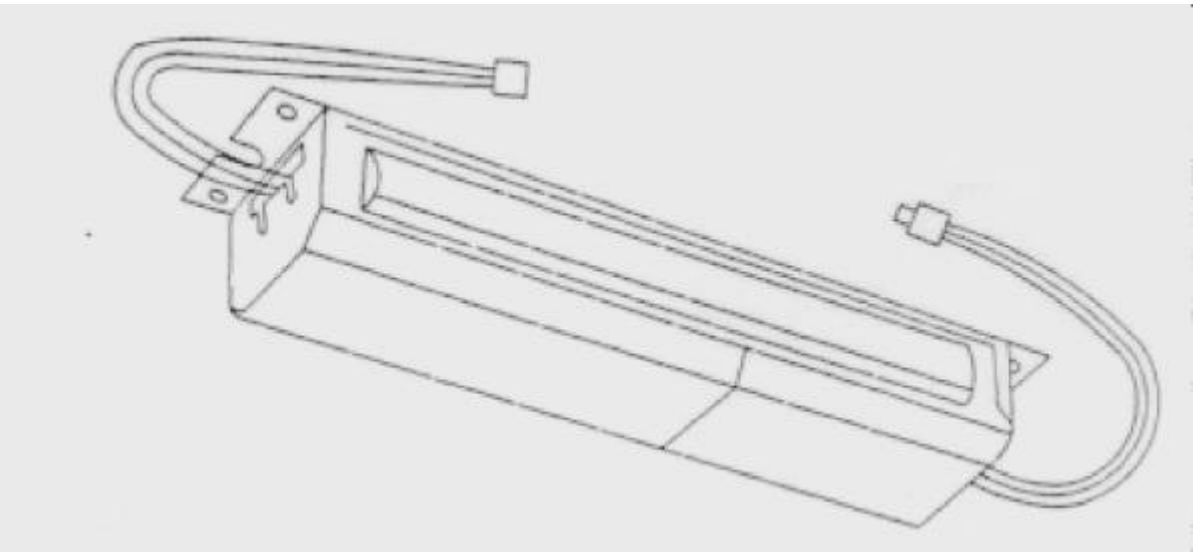

TYPE 200

Emergency Battery and Lamp Supply Unit for Fluorescent Fixtures

The unit shall conform to UL 924 and be UL Listed for field or factory installation. The unit shall be dual-rated for use on either 120 or 277 Volt lighting circuits, and shall meet or exceed NFPA 70 time and voltage requirements. The unit shall be capable of automatically supplying a minimum of 15 percent of the rated lumen output of a standard 4-foot, 40 watt rapid start fluorescent lamp in one minute following the failure of the normal power supply. It shall provide a minimum of 60 percent of the initial emergency illumination at the end of the 90-minute discharge period. The battery charger shall be capable of fully recharging the battery within 24 hours after the return of the normal power supply and, under normal operations, shall trickle charge the battery to maintain it in a fully charged condition. The unit shall be capable of operating at least one of the lamps in the fixture which also houses the unit and shall consist of a high temperature, pocket-plate type of nickel cadmium battery, charger, and electronic circuitry in one compact housing. A conveniently located test switch shall be provided to test the solid-state circuitry and the readiness of the battery. The battery shall be designed to require no maintenance during the expected life, be warranted for not less than three years from the date of the purchase of the unit, and be field replaceable without requiring removal of other components of the unit. Other components of the unit shall be fully warranted for not less than 18 months from the date of purchase of the unit.

The Emergency Battery and Lamp Supply Unit indicated on this sheet shall be provided as indicated on other sheets, and shall also conform to requirements specified or indicated in the contract documents.

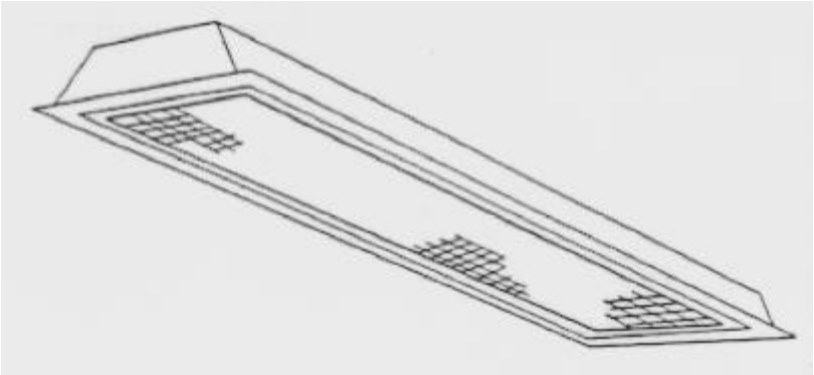

TYPE 204
Static Troffer

TYPE 205
Air Handling Troffer

Recessed Fluorescent Fixture, 1-foot by 4-foot

FirstSuffix	Second Suffix	ThirdSuffix	Description
A			Single lamp
B			Two lamp
	1		Prismatic acrylic lens
	2		1/2- by 1/2- by 1/2-inch acrylic cube louver
	3		1/2- by 1/2- by 1/2-inch polystyrene cube louver
		A	Type 200 emergency unit

Fixture shall conform to UL 1570. Housing shall be complete with integral side trim flanges. Housing and trim flanges shall be cold-rolled steel. The lens or louver shall be installed in a manner that will prevent it from coming loose due to vibration. The ballast and wiring shall be enclosed in a wireway that is continuous throughout the length of the fixture and which forms a wireway for circuits through the fixture. All metal parts shall receive a rust inhibitive coating before application of the finish coat. The finish coat shall be baked white enamel. Lenses and acrylic cube louvers shall be 100 percent virgin acrylic plastic. The lens or louver shall be four feet in length. Acrylic lens shall be flat, 0.125 inch nominal thickness, low brightness, with smooth top surface and a lower surface having a regular array of prismatic elements. Single-lamp ballast shall be used for individually mounted single-lamp fixtures and where single-lamp fixtures occur at the ends of continuous rows, except two-lamp ballasts shall be used for tandem mounted single-lamp fixtures. Standard ballast(s) shall be the Class P, high power factor type which has been approved for the application by the Certified Ballast Manufacturers. Fixture shall be prewired.

Fixture types indicated on this sheet shall also conform to requirements specified and indicated in the contract docurnents.

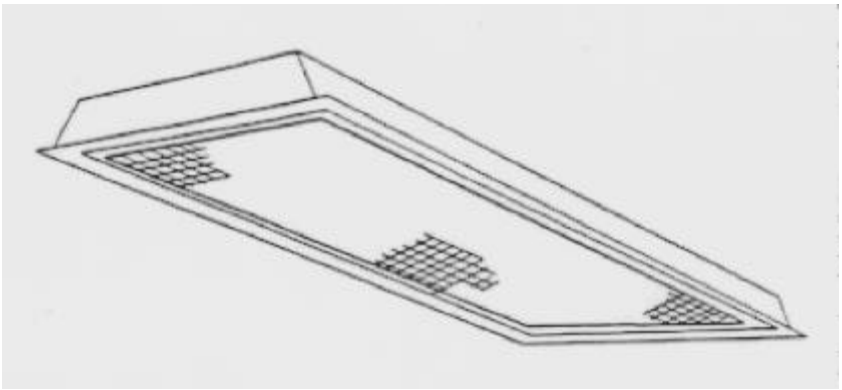

TYPE 206 TYPE 207
Static Troffer Air Handling Troffer

Recessed Fluorescent Fixture, 2-foot by 4-foot

FirstSuffix	SecondSuffix	Third Suffix	Description
A			Two lamps
B			Three lamps
C			Four lamps
	1		Prismatic acrylic lens
	2		1/2- by 1/2- by 1/2-inch cube louver
	3		1/2- by 1/2- by 1/2-inch polystyrene cube louver
		Type A	200 emergency unit

Fixture shall conform to UL 1570. Housing shall be complete with integral side trim flanges. Housing and trim flanges shall be cold-rolled steel. The lens or louver shall be installed in a manner that will prevent it from coming loose due to vibration. The ballasts and wiring shall be enclosed in a wireway that is continuous throughout the length of the fixture and which forms a wireway for circuits through the fixture. All metal parts shall receive a rust inhibitive coating before application of the finish coat. The finish coat shall be baked enamel. Lenses and acrylic cube louvers shall be 100 percent virgin acrylic plastic. The lens or louver shall be four feet in length. Acrylic lens shall be flat, 0.125 inch nominal thickness, low brightness, with smooth top surface and a lower surface having a regular array of prismatic elements. Two-lamp ballasts shall be used for individually mounted two-lamp fixtures. Standard ballast(s) shall be the Class P, high power factor type which has been approved for the application by the Certified Ballast Manufacturers. Fixture shall be prewired.

Fixture types indicated on this sheet shall also conform to requirements specified and indicated in the contract documents.

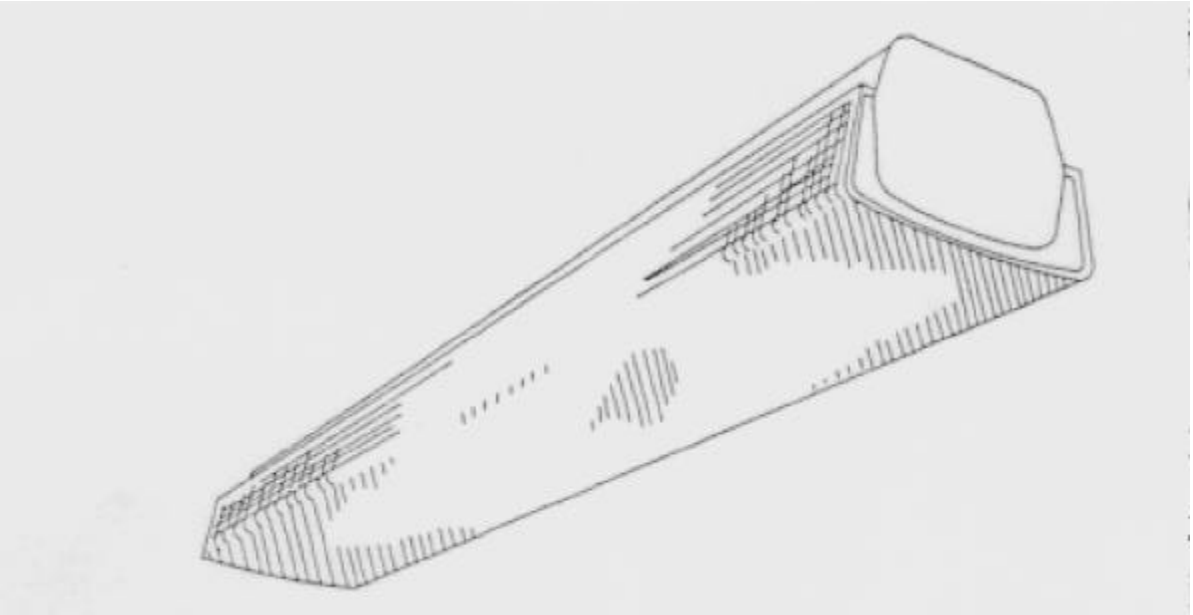

TYPE 218	TYPE 219
7-inch by 48-inch	7-inch by 96-inch
One Lamp	Two Lamps

Surface, Ceiling Mounted, Wraparound Fluorescent Fixture

Fixture shall be constructed of cold-rolled steel and shall conform to UL 1570. The fixture chassis shall be die-formed. Back housing shall be one piece, solid along its entire length, and shall have sufficient knockouts for conventional pendant and surface mounting. The lens shall be of 100 percent virgin acrylic plastic not less than 1/8-inch nominal thickness. The lens shall be easily removed without the use of tools and shall be held in place by concealed hinges and latches, by reinforcing ribs along the edges, or by resting in place on the end plate of the fixture. The lens and end caps or fittings shall fit so there is no light leakage. Removable white plastic or baked white enamel metal end fittings shall be provided on each end of each fixture to permit the installation of continuous rows of fixtures, the closure of ends of fixtures in a continuous row, and the closure of the ends of individually mounted fixtures. All metal parts shall receive a rust inhibitive coating and a white baked enamel finish. Type 218 fixture shall use a single-lamp ballast for individually mounted fixtures and where single-lamp fixtures occur at the ends of continuous rows. Two-lamp ballasts shall be provided for the Type 219 fixtures and for tandem mounted Type 218 fixtures. Type 219 fixture shall be provided with a 2-piece lens, each approximately 48 inches in length, and a light concealing center strap. Standard ballast(s) shall be the Class P, high power factor type which has been approved for the application by the Certified Ballast Manufacturers. Fixture shall be prewired.

Fixture types indicated on this sheet shall also conform to requirements specified and indicated in the contract documents.

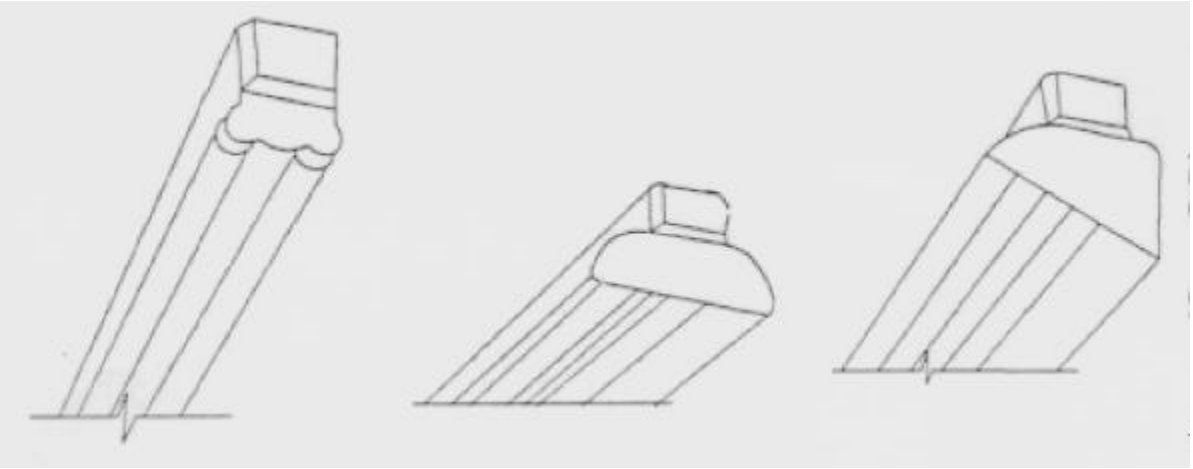

TYPE 220	TYPE 221	TYPE 222
Without Reflector	With Symmetric Reflector	With Asymmetric Reflector

Single- and Two-Lamp Fluorescent Strip Fixture

Suffix	Description
A	One lamp
B	Two lamps

Fixture shall be constructed of cold-rolled steel and shall conform to UL 1570. The fixture shall have a die-formed steel channel, suitable mounting holes, and ½-inch knockouts in back. Channel and end fittings shall have a baked white enamel finish. The channel and end fittings shall be removed to permit the installation of a continuous row of fixtures, the closure of fixtures at the ends of continuous rows, and the closure of the ends of individually mounted fixtures with no light leakage. Channel covers shall have threaded fittings for reflector mounting, shall be constructed of die-formed steel, and shall be finished with baked white enamel. All ferrous metal parts shall receive a rust inhibitive coating before application of finish coat. Reflectors shall be designed for direct attachment to the channel cover with suitable threaded fittings. Reflectors shall be manufacturer's standard commercial product and shall be constructed of die-formed aluminum with highly polished finish, or steel with white porcelain enamel finish, or steel with baked white enamel finish. Fixture shall be suitable for pendant and surface mounting. Standard ballast(s) shall be the Class P, high power factor type which has been approved for the application by the Certified Ballast Manufacturers. Fixture shall be prewired. Sockets shall be of the type requiring a forced movement along the longitudinal axis of the lamp for insertion and removal of the lamp. Fluoresent tubes shall be protected by a virgin acrylic protective sleeve and clear plastic vented end caps.

Fixture types indicated on this sheet shall also conform to requirements specified and indicated in the contract documents.

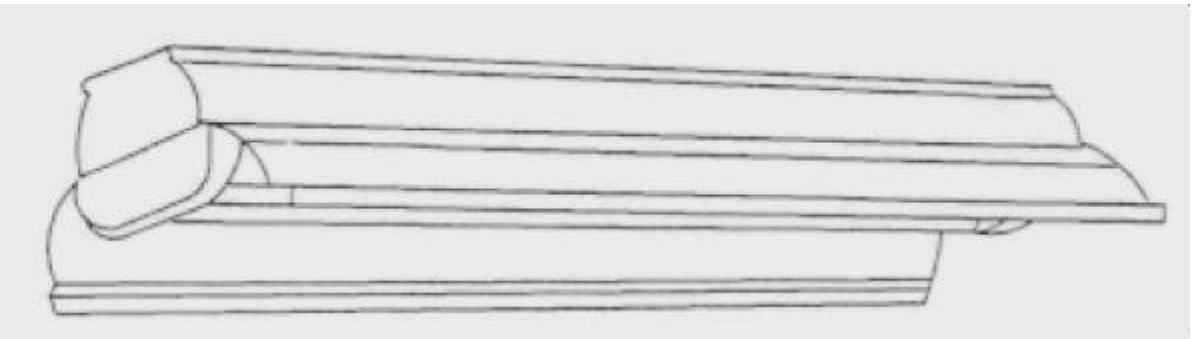

TYPE 230
Suspension Mounted, Industrial,
Open Type Fluorescent Fixture, 4-foot

First-Suffix	Second-Suffix	Description
A		Two lamps
B		Three lamps
	1	8 to 15 percent uplight
	2	18 to 25 percent uplight

Fixture shall conform to UL 1570. Standard ballast(s) shall be the Class P, high power factor type approved for the application by the Certified Ballast Manufacturers. Channel housing, end fittings, and reflector shall be porcelain enamel, baked white enamel or aluminum oxide. Sockets shall be of the type requiring a forced movement along the longitudinal axis of the lamp for insertion and removal of the lamp. Fixture shall be prewired. Fluoresent tubes shall be protected by a virgin acrylic protective sleeve and clear plastic vented end caps.

Fixture type indicated on this sheet shall also conform to requirements specified and indicated in the contract documents.

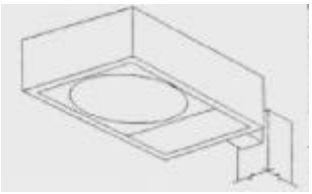

TYPE 401

Enclosed, Integrally Ballasted, Rectangular Shaped,
Side Mounted, High Intensity Discharge Lighting Fixture

First Suffix	Second Suffix	Description
A		Rated for mercury vapor lamp
B		Rated for metal halide lamp
C		Rated for high pressure sodium lamp
	1	IES type II medium light distribution
	2	IES type III medium light distribution
	3	IES type V medium light distribution

Fixture shall conform to UL 1572. Fixture housing shall have sides and door frame of one-piece extruded aluminum with welded joints and top of crowned sheet aluminum. The top shall be spot welded and sealed watertight. The housing shall be rigidly attached to a square shaped mounting arm of extruded aluminum. The fixture door shall have a flat heat and impact resistant lens of 3/16-inch nominal, tempered glass, and shall be hinged and held in place with captive screws of the same finish as the door. The lens and door shall enclose the lamp compartment. The reflector shall be aluminum of the manufacturer's standard commercial product finish suitable for the lamp type and rating. The ballast shall be of the high power factor type. The ballast and power components shall be mounted on a single bracket and shall be removable. The fixture, including the mounting arm, shall be gasketed to allow air movement but prevent the entry of dust and insects. Ballast shall be of the constant wattage autotransformer type for mercury vapor lamps, lead-peak autotransformer type for metal halide lamps, and regulating type for high pressure sodium lamps. Ballast shall be capable of starting and operating the lamp at ambient temperatures ranging from minus 20 degrees F to 105 degrees F. A square extruded aluminum pole including anchor type base, anchor bolts and mounting hardware shall be provided by the fixture manufacturer and shall be the manufacturer's standard commercial product for the number of fixtures and wind load indicated or specified. The fixture housing mounting arm shall have a dark duranodic bronze finish. The fixture shall be prewired and shall have a mogul base glazed porcelain lampholder.

Fixture type indicated on this sheet shall also conform to requirements specified and indicated in the contract documents.

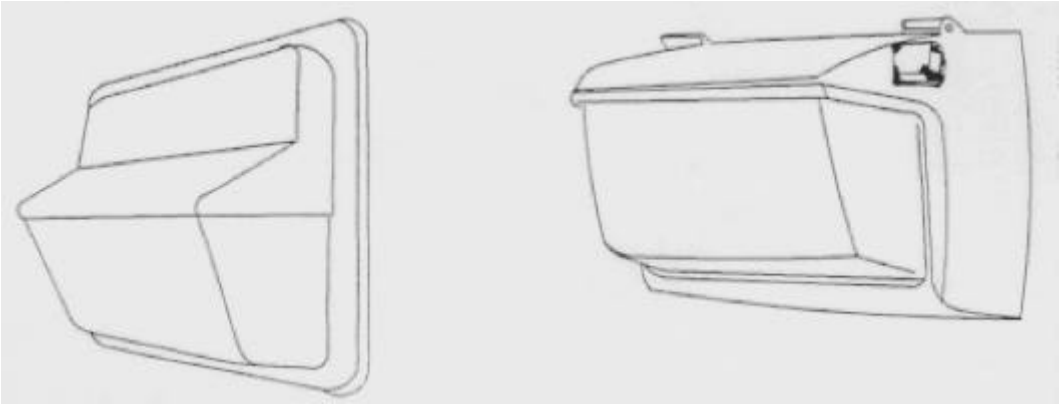

TYPE 501 TYPE 502

High Intensity Discharge Fixture for Exterior Wall Mounting,
Medium Output

Suffix	Description
	Rated for:
A	50 watt high pressure sodium lamp
B	70 watt high pressure sodium lamp
C	100 watt high pressure sodium lamp
D	150 watt high pressure sodium lamp
E	175 watt metal halide lamp

Fixture shall conform to UL 1572 and shall be rated for use in wet locations. The fixture housing, door assembly, and backplate shall be die-cast aluminum. The door assembly shall have integral cast aluminum hinges. The door assembly shall be held securely to the fixture housing with a stainless steel safety strap when the door is in the open position. The door assembly shall be held firmly against a sealing gasket between the fixture door and housing by stainless steel latches or with stainless steel or brass captive screws when the fixture door is closed. The refractor shall be prismatic borosilicate glass or polycarbonate resin. The refractor shall be gasketed and securely held in the door frame, but shall be easily removed for replacement with a common tool. The reflector shall be aluminum with the manufacturer's standard commercial product finish suitable for the type and rating of the lamp. The fixture shall have manufacturers standard protective coating. Cast knockouts shall be provided in the backplate for recessed outlet box mounting. Ballast shall be of the high power factor type. Ballast shall be of the lead-peak autotransformer type for metal halide lamps and the regulating type for high pressure sodium lamps. Ballast shall be capable of starting and operating the lamp at ambient temperatures from minus 20 degrees F to 105 degrees F. The fixture shall be prewired, and shall have a field adjustable, mogul base glazed porcelain lampholder.

Fixture type indicated on this sheet shall also conform to requirements specified and indicated in the contract documents.

SECTION 16640

CATHODIC PROTECTION SYSTEM (SACRIFICIAL ANODE)

PART 1 GENERAL

1.1 REFERENCES

The publications listed below form a part of this specification to the extent referenced. The publications are referred to in the text by basic designation only.

NATIONAL ASSOCIATION OF CORROSION ENGINEERS (NACE)

NACE RP0169	(1992) Control of External Corrosion on Underground or Submerged Metallic Piping Systems

NATIONAL ELECTRICAL MANUFACTURERS ASSOCIATION (NEMA)

NEMA TC 2	(1990) Electrical Polyvinyl Chloride (PVC) Tubing (EPT) and Conduit (EPC-40 and EPC-80)

NATIONAL FIRE PROTECTION ASSOCIATION (NFPA)

NFPA 70	(1993) National Electrical Code

UNDERWRITERS LABORATORIES (UL)

UL 6	(1981; Rev thru Dec, 1992) Rigid Metal Conduit
UL 510	(1986; Rev Oct 1986) Insulating Tape

1.2 GENERAL REQUIREMENTS

1.2.1 Services of Corrosion Engineer

The Contractor shall obtain the services of a corrosion engineer to supervise and to inspect the installation of the cathodic protection system. Corrosion Engineer refers to a person, who, by reason of his knowledge of the physical sciences and the principles of engineering and mathematics, acquired by professional education and related practical experience, is qualified to engage in the practice of corrosion control on buried or submerged metallic piping systems and metallic tanks. Such person may be a licensed professional engineer or may be a person certified as being qualified by the National Association`of Corrosion Engineers if such licensing or certification includes suitable experience in corrosion control on buried or submerged metallic piping systems and metallic tanks. The corrosion engineer shall insure that the cathodic protection system is installed, tested, and placed into service in accordance with the requirements specified.

1.2.2 Rules

The installation shall conform to the applicable rules of NFPA 70.

1.3 SUBMITTALS

Government approval is required for submittals with a "GA" designation; submittals having an "FIO" designation are for information only. The following shall be submitted in accordance with Section 01300 SUBMITTAL DESCRIPTIONS:

SD-01 Data

Cathodic Protection System; FIO.

Manufacturer's Catalog Data.

Qualifications; FIO.

Evidence of qualifications of the corrosion engineer.

SD-04 Drawings

Cathodic Protection System; FIO.

Detail drawings consisting of a complete list of equipment and material including manufacturer's descriptive and technical literature, catalog cuts, and installation instructions. Detail drawings shall contain complete wiring and schematic diagrams and any other details required to demonstrate that the system has been coordinated and will function properly as a unit.

SD-09 Reports

Tests and Measurements; FIO.

Test reports in booklet form tabulating all field tests and measurements performed, upon completion and testing of the installed system.

PART 2 PRODUCTS

2.1 ANODES

2.1.1 Magnesium Anodes

Magnesium anodes shall be Type I corresponding to the applicable chemical composition listed in the following table:

PERCENT BY WEIGHT

ELEMENT	TYPE I
Aluminum	5.0 - 7.0
Zinc	2.0 - 4.0
Manganese	0.15 Min.
Copper	0.1 Max.
Silicon	0.30 Max.
Iron	0.003 Max.
Nickel	0.003 Max.
Others	0.30 Max.
Magnesium	Balance

2.1.2 Connecting Wire

Wire shall be No. 12 AWG solid copper wire, not less than 10 feet long, unspliced, complying with NFPA 70, Type TW insulation. Connecting wires for magnesium anodes shall be factory installed with the place of emergence from the anode in a cavity sealed flush with a dielectric sealing compound.

2.1.3 Artificial Backfill

Anodes shall be factory packaged with an artificial backfill in a water permeable fabric sack or cardboard container. Anodes shall be packaged on a vibrating platform to attain dense packing, and centering shall be assured by means of spacers.

Artificial backfill shall have the following composition:

Material	Approximate Percent by Weight
Gypsum	75
Bentonite	20
Sodium Sulfate	5
Total	100

2.2 MISCELLANEOUS MATERIALS

2.2.1 Electrical Wire

Wire shall be No. 12 AWG solid copper wire with NFPA 70, Type TW insulation. Connecting wire splicing shall be copper compression connections made for the purpose or exothermic welds following instructions of the manufacturer. Split-bolt connections shall not be used.

2.2.2 Conduit

Rigid galvanized steel conduit and accessories shall conform to UL 6. Non metallic conduit shall conform to NEMA TC 2.

2.2.3 Joint, Patch, Seal, and Repair Coating

Sealing and dielectric compound shall be a black, rubber based compound that is soft, permanently pliable, tacky, moldable, and unbacked. Compound shall be applied as recommended by the manufacturer, but not less than 1/2-inch thick.

Coating compound shall be cold-applied coal-tar base mastic or an approved pipeline wrapping.

Pressure-sensitive vinyl plastic electrical tape shall conform to UL 510.

2.2.4 Preformed Sheaths

Sheaths for encapsulating electrical wire splices to be buried underground shall fit the insulated wires entering the spliced joint.

2.2.5 Epoxy Potting Compound

Compound for encapsulating electrical wire splices to be buried underground shall be a two package system made for the purpose.

PART 3 EXECUTION

3.1 INSTALLATION

Unless otherwise indicated, all equipment shall be installed in accordance with the manufacturer's recommendations.

3.1.1 Anode Installation

Anodes of the size indicated shall be installed at the locations shown. Locations may be changed to clear obstructions if approved. Anodes shall be installed as indicated in a dry condition after any plastic or waterproof protective covering has been completely removed from the water permeable, permanent container housing the anode metal. The anode connecting wire shall not be used for lowering the anode into the hole. The annular space around the anode shall be backfilled with fine earth in 6-inch layers and each layer shall be hand tamped. Care must be exercised

not to strike the anode or connecting wire with the tamper. Approximately 5 gallons of water shall be applied to each filled hole after anode backfilling and tamping has been completed to a point about 6 inches above the anode. After the water has been absorbed by the earth, backfilling shall be completed to the ground surface level.

Single anodes spaced as shown shall be direct connected to the pipeline, allowing adequate slack in the connecting wire to compensate for movement during backfill operation.

Connections to ferrous pipe shall be made by exothermic weld methods manufactured for the type of pipe.

Electric arc welded connections and other types of welded connections to ferrous pipe and structures shall be approved before use.

3.2 CRITERIA OF PROTECTION

Criteria for determining the adequacy of protection on a buried pipe shall be in accordance with NACE RP0169 and shall be selected by the corrosion engineer as applicable.

3.2.1 Iron and Steel

One of the following methods shall apply:

3.2.1.1 850 MV Negative Voltage

A negative voltage of at least minus 0.85 volt as measured between the pipe and a saturated copper-copper sulfate reference electrode contacting the earth directly over the pipe. Determination of this voltage shall be made with the cathodic system in operation.

3.2.1.2 300 MV Negative Voltage

A negative voltage shift of at least 300 millivolts as measured between the pipe and a saturated copper-copper sulfate reference electrode contacting the earth directly over the pipe. Determination of this voltage shift shall be made with the protective current applied. These criteria apply to pipes not in electrical contact with dissimilar metals.

3.2.1.3 100 MV Polarization Voltage

A minimum polarization voltage shift of 100 millivolts as measured between the pipe and a saturated copper-copper sulfate reference electrode contacting the earth directly over the pipe. This polarization voltage shift shall be determined by interrupting the protective current and measuring the polarization decay. When the protective current is interrupted, an immediate voltage shift will occur. The voltage reading, after the immediate shift, shall be used as the base reading from which to measure polarization decay.

3.3 TESTS AND MEASUREMENTS

3.3.1 Baseline Potentials

After backfill of the pipe and anodes is completed, but before the anodes are connected to the pipe, the static potential-to-soil of the pipe shall be measured. The locations of these measurements shall be identical to the locations specified for pipe-to-reference electrode potential measurements. The initial measurements shall be recorded.

3.3.2 Insulation Testing

Before the anode system is connected to the pipe, an insulation test shall be made at each insulating joint or fitting. This test shall demonstrate

that no metallic contact, or short circuit exists between the two insulated sections of the pipe. Any insulating fittings installed and found to be defective shall be reported to the Contracting Officer.

3.3.3 Anode Output

As the anodes are connected to the pipe, current output shall be measured with an approved low resistance ammeter. The values obtained and the date, time, and location shall be recorded.

3.3.4 Pipe-To-Reference Electrode Potential Measurements

Upon completion of the installation and with the entire cathodic protection system in operation, electrode potential measurements shall be made using a copper-copper sulfate reference electrode and a potentiometer-voltmeter, or a direct current voltmeter having an internal resistance (sensitivity) of not less than 100,000 ohms per volt and a full scale of 1 or 2 volts. The locations of these measurements shall be identical to the locations used for the baseline potentials. The values obtained and the date, time, and locations of measurements shall be recorded.

3.3.5 Location of Measurements

3.3.5.1 Piping or Conduit

For coated piping or conduit, measurements shall be taken from the reference electrode located in contact with the earth, directly over the pipe. Connection to the pipe shall be made at service risers, valves, test leads, or by other means suitable for test purposes. Measurements shall be made at intervals not exceeding 400 feet. In no case shall less than three measurements be made over any length of line. Additional measurements shall be made at each distribution service riser, with the reference electrode placed directly over the service line.

3.3.6 Interference Testing

Before final acceptance of the installation, interference tests shall be made with respect to any foreign pipes in cooperation with the owner of the foreign pipes. A full report of the tests giving all details shall be made.

3.3.7 Recording Measurements

All pipe-to-soil potential measurements including initial potentials where required shall be recorded. The Contractor shall locate, correct and report to the Contracting Officer any short circuits to foreign pipes encountered during checkout of the installed cathodic protection system. Pipe-to-soil potential measurements are required on as many pipes as necessary to determine the extent of protection or to locate short-circuits.

3.4 PIPE JOINTS

3.4.1 Electrical Continuity

Underground pipe shall be electrically continuous except at places where electrically insulating joints are specified. Pipe joined by means other than welding shall meet electrical continuity requirements. The following mechanical joints that are not factory designed to provide electrical continuity shall be bonded by installing a metallic bond across the joint. The bonding connections shall be made by the exothermic welding process. Mechanical joints designed to provide electrical continuity shall meet manufacturer's published standards.

3.4.2 Coating

Mechanical joints and fittings of either the electrically conductive or insulating type shall be coated with an underground type dielectric coating system. Where external electrical continuity bonds are installed across mechanical joints, all bare or exposed metal, welds, bare wire and exposed coupling parts shall be coated with a coating system.

Couplings and fittings which have a low profile exterior designed to permit tape coating shall be primed and wrapped with an underground type pipe tape following recommendations of the coupling or fitting manufacturer.

Couplings and fittings that cannot be properly taped shall be enclosed in a spaced mold manufactured for the purpose and filled with cold applied dielectric compound.

3.5 ELECTRICAL ISOLATION OF STRUCTURES

3.5.1 Insulating Fittings

Insulating flanges and couplings shall be installed aboveground, or within manholes, wherever possible, but an insulating device that electrically separates a pipeline shall not be installed in a confined area where a combustible atmosphere may collect unless precautions are taken to prevent arcing such as by means of externally located lightning arresters, grounding cells, or other means. Insulating flanges and couplings in lines entering buildings shall be located at least 12 inches above grade or floor level. Pipelines`entering buildings either below or above ground shall be electrically isolated from the structure wall with an electrically isolating gas tight wall sleeve.

3.5.2 Gas Distribution Piping

Electrical isolation shall be provided at each building riser pipe to the pressure regulator, at all points where a short circuit to another structure or to a foreign structure may occur, and at other locations as indicated.

3.5.3 Electrical Isolation

Water: electrical isolation shall be provided at each building entrance, and at other locations as indicated.

3.5.4 Copper Piping

Copper piping shall be electrically isolated at both ends of the pipe run.

3.6 DISSIMILAR METALS

3.6.1 Underground Dissimilar Piping

Buried piping of dissimilar metals including new and old steel piping, excepting valves, shall be electrically separated by means of electrically insulating joints at every place of connection. The insulating joint, including the pipe, shall be coated with an underground type dielectric coating for a minimum distance of 10 diameters on each side of the joint.

3.6.2 Underground Dissimilar Valves

Dissimilar ferrous valves in a buried ferrous pipeline, including the pipe, shall be coated with an underground type dielectric coating for a minimum distance of 10 diameters on each side of the valve. Brass or bronze valves shall not be used in a buried ferrous pipeline.

3.6.3 Aboveground Dissimilar Pipe and Valves

If the dissimilar metal pipe junction, including valves, is not buried and exposed to atmosphere only, the connection or valve, including the pipe, shall be coated with an underground type dielectric coating for a minimum distance of three diameters on each side of the junction.

-- End of Section --