US Army Corps
of Engineers
Baltimore District

CONSTRUCTION SPECIFICATIONS

DEFENSE SECURITY SERVICE

FORT MEADE, MD.

INVITATION NO. **DACA31-99-B-0004**

CONTRACT NO.

DATE **DEC. 10, 1998**

PROJECT TABLE OF CONTENTS

DIVISION 01 - GENERAL REQUIREMENTS

01000 ADMINISTRATIVE REQUIREMENTS
01050 JOB CONDITIONS
01060 SAFETY
01090 SOURCES FOR REFERENCE PUBLICATIONS
01320 PROJECT SCHEDULE
01330 SUBMITTAL PROCEDURES
01415 METRIC MEASUREMENTS
01451 CONTRACTOR QUALITY CONTROL
01510 TEMPORARY CONSTRUCTION ITEMS
01561 ENVIRONMENTAL PROTECTION
01720 AS-BUILT DRAWINGS - CADD

DIVISION 02 - SITE WORK

02200 STORMWATER MANAGEMENT POND AND EMBANKMENT
02221 EXCAVATION, FILLING AND BACKFILLING FOR BUILDINGS
02230 CLEARING AND STRIPPING (GRUBBING), OVEREXCAVATION, AND OVEREXCAVATION BACKFILL
02300 SITE GRADING AND EARTHWORK FOR ROADWAYS
02316 EXCAVATION, TRENCHING, AND BACKFILLING FOR UTILITIES SYSTEMS
02551 BITUMINOUS PAVING - MARYLAND
02580 PAVEMENT MARKINGS
02620 SUBDRAINAGE SYSTEM
02660 WATER DISTRIBUTION SYSTEM
02685 GAS DISTRIBUTION SYSTEM
02714 EXTERIOR PAVEMENT DRAINAGE LAYER (RAPID DRAINAGE MATERIAL (RDM)) AND INTERIOR PAVEMENT BASE COURSE
02720 STORM-DRAINAGE SYSTEM
02722 AGGREGATE BASE COURSE
02730 SANITARY SEWERS
02770 CONCRETE SIDEWALKS AND CURBS AND GUTTERS
02935 TURF
02950 TREES, SHRUBS, GROUND COVERS, AND VINES

DIVISION 03 - CONCRETE

03100 STRUCTURAL CONCRETE FORMWORK
03200 CONCRETE REINFORCEMENT
03250 EXPANSION JOINTS AND CONTRACTION JOINTS
03300 CAST-IN-PLACE STRUCTURAL CONCRETE
03450 PRECAST ARCHITECTURAL CONCRETE

DIVISION 04 - MASONRY

04200 MASONRY
04460 STONE CLADDING AND FIELDSTONE

DIVISION 05 - METALS

05055 WELDING, STRUCTURAL
05061 ULTRASONIC INSPECTION OF WELDMENTS
05120 STRUCTURAL STEEL
05210 STEEL JOISTS
05300 STEEL DECKING
05500 MISCELLANEOUS METAL

DIVISION 06 - WOODS & PLASTICS

06100 ROUGH CARPENTRY
06200 FINISH CARPENTRY
06400 ARCHITECTURAL WOODWORK
06650 SOLID POLYMER FABRICATION

DIVISION 07 - THERMAL & MOISTURE PROTECTION

07210 BUILDING INSULATION
07270 FIRESTOPPING
07416 STRUCTURAL STANDING SEAM METAL ROOF (SSSMR) SYSTEM
07530 ELASTOMERIC ROOFING (EPDM)
07600 SHEET METALWORK, GENERAL
07900 JOINT SEALING

DIVISION 08 - DOORS & WINDOWS

08110 STEEL DOORS AND FRAMES
08120 ALUMINUM DOORS AND FRAMES
08210 WOOD DOORS
08330 OVERHEAD ROLLING DOORS
08520 ALUMINUM WINDOWS
08700 BUILDERS' HARDWARE
08810 GLASS AND GLAZING

DIVISION 09 - FINISHES

09250 GYPSUM WALLBOARD
09310 CERAMIC TILE
09445 RESINOUS TERRAZZO FLOORING
09510 ACOUSTICAL CEILINGS
09520 ACOUSTICAL WALL TREATMENT
09650 RESILIENT FLOORING
09680 CARPET
09720 WALLCOVERINGS
09900 PAINTING, GENERAL

DIVISION 10 - SPECIALTIES

10160 TOILET PARTITIONS
10201 METAL WALL LOUVERS
10260 WALL AND CORNER PROTECTION
10270 RAISED FLOOR SYSTEM
10400 BUILDING SPECIALTIES
10440 INTERIOR SIGNAGE
10523 FIRE EXTINGUISHERS, CABINETS AND ACCESSORIES
10800 TOILET ACCESSORIES

DIVISION 11 - Not Used

DIVISION 12 - FURNISHINGS

12320 CABINETS AND COUNTERTOPS
12490 BLINDS, VENETIAN (AND AUDIO VISUAL)

DIVISION 13 - SPECIAL CONSTRUCTION

13080 SEISMIC PROTECTION FOR MECHANICAL, ELECTRICAL EQUIPMENT
13110 CATHODIC PROTECTION SYSTEM (SACRIFICIAL ANODE)
13202 FUEL STORAGE SYSTEMS

DIVISION 14 - CONVEYING SYSTEMS

14240 ELEVATORS, HYDRAULIC

DIVISION 15 - MECHANICAL

15052 WELDING PRESSURE PIPING
15080 THERMAL INSULATION FOR MECHANICAL SYSTEMS
15330 WET PIPE SPRINKLER SYSTEM, FIRE PROTECTION
15400 PLUMBING, GENERAL PURPOSE
15401 SILVER RECOVERY/EFFLUENT TREATMENT SYSTEM
15488 GAS PIPING SYSTEMS
15569 WATER HEATING; GAS; UP TO 20 MBTUH
15650 CENTRAL REFRIGERATED AIR-CONDITIONING SYSTEM
15653 AIR-CONDITIONING SYSTEM (UNITARY TYPE)
15895 AIR SUPPLY, DISTRIBUTION, VENTILATION, AND EXHAUST SYSTEM
15950 HEATING, VENTILATING AND AIR CONDITIONING (HVAC) CONTROL SYSTEMS
15990 TESTING, ADJUSTING, AND BALANCING OF HVAC SYSTEMS

DIVISION 16 - ELECTRICAL

16115 UNDERFLOOR RACEWAY SYSTEM (CELLULAR STEEL FLOOR)
16410 AUTOMATIC TRANSFER SWITCH
16415 ELECTRICAL WORK, INTERIOR
16528 EXTERIOR LIGHTING INCLUDING SECURITY AND CCTV APPLICATIONS
16610 UNINTERRUPTIBLE POWER SUPPLY (UPS)
16670 LIGHTNING PROTECTION SYSTEM
16710 PREMISES DISTRIBUTION SYSTEM
16711 TELEPHONE SYSTEM, OUTSIDE PLANT
16721 FIRE DETECTION AND ALARM SYSTEM
16751 CLOSED CIRCUIT TELEVISION SYSTEMS
16760 INTERCOMMUNICATION SYSTEM
16794 COAXIAL CABLE DATA TRANSMISSION MEDIA

-- End of Project Table of Contents --

SECTION 01000

ADMINISTRATIVE REQUIREMENTS

PART 1 GENERAL

1.1 SUBMITTALS

Government approval is required for submittals with a "GA" designation; submittals having an "FIO" designation are for information only. The following shall be submitted in accordance with Section 01330 SUBMITTAL PROCEDURES:

SD-01 Data

Cost or Pricing Data; GA|AR.

Proof of actual equipment costs.

Equipment Data; FIO;AR.

An itemized list of serial/model numbers and equipment installed by the Contractor under this contract..

SD-06 Instructions

O and M Data; FIO;AR.

A list of proposed maintenance and instruction manuals that is mainly used for but not limited to customized equipment.

SD-07 Schedules

Progress Schedule; GA|AR.

A schedule that shows the manner in which the Contractor intends to prosecute the work.

Modified Chart; GA|AR.

Prepared when changes are authorized that result in contract time extensions.

SD-18 Records

Title Evidence; FIO;AR.

Proof of purchase for equipment and/or materials.

Invoice Copies; FIO;AR.

Proof of rental equipment costs.

Payment Evidence; FIO;AR.

Proof of full payment.

Photographs; FIO;AR.

1.2 PROGRESS SCHEDULING AND REPORTING: (JUN 1975)

The Contractor, shall within five days, or as otherwise determined by the Contracting Officer, after date of commencement of work, submit for approval a practicable progress schedule showing the manner in which he intends to prosecute the work. NADB Form 1153 ("Physical Construction Progress Chart") will be furnished by the Contracting Officer for use in preparing this schedule. If a Contractor form is used, the same information as shown in the NADB Form 1153 shall be provided. Preparation and updating of the schedule shall be as follows:

1.2.1 Preparation

The progress schedule shall be prepared in the form of time-scaled summary network diagram graphically indicating the sequence proposed to accomplish each work activity or operation, and appropriate interdependencies between the various activities. The chart shall show the starting and completion dates of all activities on a linear horizontal time scale beginning with the dates of Notice to Proceed and indicating calendar days to completion. Each activity in the construction shall be represented by an arrow and shall have a beginning and ending node (event). The entire project shall have only one beginning node and one ending node. The arrangement of arrows shall be such that they flow from left to right. Each arrow representing an activity shall be annotated to show the activity description, duration and cost. The Contractor shall indicate on the chart the important work activities that are critical to the timely overall completion of the project. Key dates for important features or portions of work features are milestone dates and shall be so indicated on the chart. Based on this chart, the Contractor shall prepare an earnings-time curve ("S" Curve) showing the rate of progress in terms of money and percent completion. Schedule progress may not include the value of materials or equipment delivered to the job site but not yet incorporated into the work. This schedule shall be the medium through which the timeliness of the Contractor's construction effort is appraised.

1.2.2 Updating:

The Contractor shall update the schedule by entering actual progress thereon at monthly intervals. The status of activities completed or partially completed as of the end of each period shall be shown, as well as the percentage of work completed. In computing actual progress, the value of material and equipment on site but not incorporated into the work may not be considered. When changes are authorized that result in contract time extensions, the Contractor shall submit a modified chart for approval by the Contracting Officer. The Contract Clause entitled "SCHEDULES FOR CONSTRUCTION CONTRACTS" with reference to overtime, extra shifts, etc., may be invoked when the Contractor fails to start or complete work activities or portions of same by the dates indicated on the approved progress chart, or when it is apparent to the Contracting Officer from the Contractor's actual progress that these dates will not be met. (CENAB-CO-E)

1.3 PAYMENTS TO CONTRACTORS: (NOV 1976)

For payment purposes only, an allowance will be made by the Contracting Officer of 100 percent of the invoiced cost of materials or equipment

delivered to the site but not incorporated into the construction, pursuant to the Contract Clause entitled "PAYMENTS UNDER FIXED-PRICE CONSTRUCTION CONTRACTS". The Contracting Officer may also, at his discretion, take into consideration the cost of materials or equipment stored at locations other than the jobsite, when making progress payments under the contract. In order to be eligible for payment, the Contractor must provide satisfactory evidence that he has acquired title to such material or equipment, and that it will be utilized on the work covered by this contract. Further, all items must be properly stored and protected. Earnings will be computed using 100% of invoiced value. (CENAB-CO-E)

1.4 IDENTIFICATION OF EMPLOYEES: (OCT 1983)

Each employee assigned to this project by the Contractor and subcontractors shall be required to display at all times, while on the project site, an approved form of identification provided by the Contractor, as an authorized employee of the Contractor/subcontractor. In addition, on those projects where identification is prescribed and furnished by the Government, it shall be displayed as required and it shall immediately be returned to the Contracting Officer for cancellation upon release of the assigned employee and or completion of project. (CENAB)

1.5 PURCHASE ORDER: (SEP 1975)

One readable copy of all purchase orders for material and equipment, showing firm names and addresses, and all shipping bills, or memoranda of shipment received regarding such material and equipment, shall be furnished the appointed Contracting Officer's Representative as soon as issued. Such orders, shipping bills or memoranda shall be so worded or marked that all material and each item, piece or member of equipment can be definitely identified on the drawings. Where a priority rating is assigned to a contract, this rating, the required delivery date, and the scheduled shipping date shall also be shown on the purchase order. At the option of the Contractor, the copy of the purchase order may or may not indicate the purchase price. (CENAB-CO-E)

1.6 EQUIPMENT OWNERSHIP AND OPERATING EXPENSE SCHEDULE (EFARS 52.0231.5000 (OCT 1995))

(a) This clause does not apply to terminations. See 52.249-5000, Basis for settlement of proposals and FAR Part 49.

(b) Allowable cost for construction and marine plant and equipment in sound workable conditions owned or controlled and furnished by a contractor or subcontractor at any tier shall be based on actual costs data for each piece of equipment or groups of similar serial and services for which the government can determine both ownership and operating costs from the contractor’s accounting records. When both ownership and operating costs can not be determined for any piece of equipment or groups of similar serial or series equipment from the contractor’s accounting records, costs for that equipment shall be based upon the applicable provisions of EP1110-1-8 Construction Equipment Ownwership and Operating Expenses Schedule, Region East. Working conditions shall be considered to be average for determining equipment rates using the schedule unless specified otherwise by the contracting officer. For equipment not included in the schedule, rates for comparable pieces of equipment may be used or a rate may be developed using the formula provided in the schedule. For forward pricing, the schedule in effect at the time of negotiations shall apply. For retroactive pricing, the schedule in effect at the time the work was

performed shall apply.

(c) Equipment rental costs are allowable, subject to the provisions of FAR 31.105(d) (ii) and Far 31.205-36. Rates for equipment rented from an organization under common control, lease-purchase arrangements, and sale-leaseback arrangements, will be determined using the schedule, except that actual rates will be used for equipment leased from an organization under common control that has an established proactive of leasing the same or similar equipment to unaffiliated leasees.

(d) When actual equipment costs are proposed and the total amount of the pricing action exceeds the small purchase threshold, the contracting officer shall request the contractor to submit either certified cost or pricing data, or partial/limited data, as appropriate. The data shall be submitted on Standard Form 1411, Contract Pricing Proposal Cover Sheet. CENAB-CT/SEP 95 (EFARS 52.231-5000)

1.7 REAL PROPERTY EQUIPMENT DATA: (APR 1975)

At or before the time of completion of the contract, the Contractor shall submit to the Contracting Officer a complete itemized list, including serial and model number where applicable, showing the unit retail value of each Contractor furnished item of mechanical, electrical and plumbing equipment installed by the Contractor under this contract. For each of the items which is specified herein to be guaranteed for a specified period from the date of acceptance thereof, either for beneficial use or final acceptance, whichever is earlier, against defective materials, design, and workmanship, the following information shall be given: the name, address and telephone number of the Subcontractor, Equipment Supplier, or Manufacturer originating the guaranteed item. The list shall be accompanied by a copy of the specific guarantee document for each item which is specified herein to be guaranteed if one had been furnished to the Contractor by the Equipment Supplier or Manufacturer. The Contractor's guarantee to the Government of these items will not be limited by the terms of any manufacturer's guarantee to the Contractor. Baltimore District NADB Form 1019 may be utilized for the itemized listing and will be made available to the Contractor upon request. (CENAB-CO-E)

1.8 O and M DATA: (JUL 1979)

The requirements for furnishing operating and maintenance data and field instruction are specified elsewhere in the specifications. The Contractor shall submit to the Contracting Officer, at a time prior to the 50% project completion time, a list of proposed maintenance and instruction manuals to be furnished the Government and the scheduled dates of all required field instructions to be provided by Contractor furnished personnel or manufacturer's representatives. All maintenance and instruction manuals must be furnished to the Contracting Officer at least 2 weeks prior to the scheduled dates of any required Contractor furnished field instructions or at least one month prior to project completion if no Contractor furnished field instructions are required. (CENAB)

1.9 NEGOTIATED MODIFICATIONS: (OCT 84)

Whenever profit is negotiated as an element of price for any modification to this contract with either prime or subcontractor, a reasonable profit shall be negotiated or determined by using the OCE Weighted Guidelines method outlined in EFARS 15.902. (Sugg. NAB 84-232)

1.10 PHOTOGRAPHS

11. PHOTOGRAPHIC COVERAGE: (SEP 85) Permission to take photographs under this contract shall be obtained from the Provost Marshal through the Contracting Officer. The Contractor shall provide photographic coverage under the contract. These services shall be for ten commercial grade color photographs every three months from the beginning of the contract until acceptance of the completed work. These photographs shall be in 8" x 10" (203.4 mm x 254 mm) size and shall be taken at intervals and at the place designated by the Contracting Officer. Negatives from all of the above photographs shall be given to and become the property of the Government. (CENAB-CO)

1.11 PARTNERING: (NOV 92)

In order to most effectively accomplish this contract, the Government is willing to form a cohesive partnership with the Contractor and its subcontractors. This partnership would strive to draw on the strengths of each organization in an effort to achieve a quality project done right the first time, within budget and on schedule. This partnership would be bilateral in make-up and participation will be totally voluntary. Any cost associated with effectuating this partnership will be agreed to by both parties and will be shared equally with no change in contract price. (CENAB-EN-DT)

PART 2 PRODUCTS

NOT APPLICABLE

PART 3 EXECUTION

NOT APPLICABLE

-- End of Section --

SECTION 01050

JOB CONDITIONS

PART 1 GENERAL

1.1 LAYOUT OF WORK

LAYOUT OF WORK: (APR 1984) The Contractor shall lay out his work and shall be held responsible for all measurement's in connection therewith. The Contractor shall furnish, at his own expense, all stakes, templates, platforms, equipment, tools, and materials and labor as may be required in laying out any part of the work. The Contractor will be held responsible for the execution of the work to such lines and grades as may be established or indicated by the Contracting Officer. It shall be the responsibility of the Contractor to maintain and preserve all stakes and other marks established by the Contracting Officer until authorized to remove them. If such marks are destroyed, by the Contractor or through his negligence, prior to their authorized removal, they may be replaced by the Contracting Officer at his discretion. The expense of replacement will be deducted from any amounts due or to become due the Contractor. (CENAB)

1.2 PHYSICAL DATA: (APR 1984)

Data and information furnished or referred to below is for the Contractor's information. The Government shall not be responsible for any interpretation or conclusion drawn from the data or information by the Contractor. (CENAB)

1.2.1 Transportation Facilities

The principal access roads are Maryland Routes 198, 32 and 175. These State Highways also connect to the other major highways, U.S. 1 and I-95. There is no current rail service to Fort Meade. The Maryland Department of Transportation provides daily bus service between the Fort and downtown Baltimore and the Baltimore-Washington International Airport.

1.2.2 Explorations

The physical conditions indicated on the drawings and in the specifications are the result of site investigation soil borings and test pits. Foundation exploration logs (including soil borings and test pits) are shown on the drawings. Whenever subsurface exploration logs are presented in the contract documents, soil test results are available for inspection in the Baltimore District, Corps of Engineers, Geotechnical Engineering Branch, Room 9250, City Crescent Building, 10 South Howard Street, Baltimore, Maryland. Soil samples are also available for inspection; however, prospective bidders are required to call (410) 962-2002 between the hours of 9:00 a.m. and 3:30 p.m., Monday through Friday (excluding Federal Holidays), a minimum of 24 hours in advance to arrange a time and date for the inspection of the samples.

1.3 SUBMITTALS

Government approval is required for submittals with a "GA" designation; submittals having an "FIO" designation are for information only. The following shall be submitted in accordance with Section 01330 SUBMITTAL PROCEDURES:

SD-07 Schedules

Shut Down Request; GA|AR.

Prior approval for service/utility interruptions.

SD-13 Certificates

Operations Statement; FIO;AR.

Written proof that the boilers have been properly installed and are operating satisfactorily in accordance with the manufacturer's instructions.

1.4 UTILITIES

1.4.1 Availability of Utilities Including Lavatory Facilities: (JUN 1980)

It shall be the responsibility of the Contractor to provide all utilities he may require during the entire life of the contract. He shall make his own investigation and determinations as to the availability and adequacy of utilities for his use for construction purposes and domestic consumption. He shall install and maintain all necessary supply lines, connections, piping, and meters if required, but only at such locations and in such manner as approved by the Contracting Officer. Before final acceptance of work under this contract, all temporary supply lines, connections and piping installed by the Contractor shall be removed by him in a manner satisfactory to the Contracting Officer. (CENAB)

1.4.2 Interruption of Utilities: (1972)

a. No utility services shall be interrupted by the Contractor to make connections, to relocate, or for any purpose without approval of the Contracting Officer.

b. Permission for a shut down request for services shall be submitted in writing to the Contracting Officer not less than 17 days prior to date of proposed interruption. The request shall give the following information:

c. Nature of Utility (Gas, L.P. or H.P., Water, Etc.)

d. Size of line and location of shutoff.

e. Buildings and services affected.

f. Hours and date of shutoff.

g. Estimated length of time service will be interrupted.

h. Services will not be shut off until receipt of approval of the proposed hours and date from the Contracting Officer.

i. Shutoffs which will cause interruption of Government work operations as determined by the Contracting Officer shall be accomplished during regular non-work hours or on non-work days of the Using Agency without any additional cost to the Government.

j. Operation of valves on water mains will be by Government personnel. Where shutoff of water lines interrupts service to fire hydrants or fire sprinkler systems, the Contractor shall arrange his operations and have sufficient material and personnel available to complete the work without undue delay or to restore service without delay in event of emergency.

k. Flow in gas mains which have been shut off shall not be restored until the Government inspector has determined that all items serviced by the gas line have been shut off. (CENAB)

1.5 DISPOSAL OF EXISTING MATERIAL AND EQUIPMENT: (DEC 1975)

All removed, dismantled or demolished material and/or equipment including rubble, scrap and debris not specified or indicated to be Government salvaged, reinstalled under this contract or otherwise retained for disposal on Government land will become the property of the Contractor and shall be promptly removed from the site and disposed of by the Contractor at his own expense and responsibility. (CENAB)

1.6 COMPLIANCE WITH POST/BASE REGULATIONS: (JUL 1980)

The site of the work is on a military reservation and all rules and regulations issued by the Commanding Officer covering general safety, security, sanitary requirements, pollution control, traffic regulations and parking, shall be observed by the Contractor. Information regarding these requirements may be obtained by contacting the Contracting Officer, who will provide such information or assist in obtaining same from appropriate authorities. (MEMO)

1.7 MAINTENANCE OF ACCESS: (DEC 1975)

The Contractor shall not block passage through sidewalks, roads, alleys or other entranceways to the building during performance of work under this contract. In addition, the Contractor shall at all times maintain safe and clear passage through interior corridors and doorways to allow minimal disruption of normal activities within the building. No equipment or new materials are to be stored in the building except those items that are necessary for progress of the immediate work. All existing equipment, materials and debris removed during the work that are not to be reinstalled shall be removed daily by the Contractor from the building. (CENAB)

1.8 TRAFFIC CONTROL

The Contractor shall maintain an access route for all vehicle traffic during construction. A traffic control plan, consisting of both drawings and narrative, shall be submitted to the Contracting Officer for review and approval. Two lane vehicular access must be maintained along MAPES ROAD during the hours of 6:00 AM and 8:00 PM. One lane vehicular access must be maintained during the hours of 8:00 AM and 6:00 PM. The plan shall show locations of all temporary detour signs, barricades, markers, flares,and any other devices necessary to safely reroute traffic around the work area. The plan shall be developed from the latest manual on uniform traffic

control devices. (CENAB)

1.9 ORDER OF WORK AND COORDINATION WITH OTHER CONTRACTORS: (FEB 1979)

Other Contractors will be working in the new facility concurrently with work under this contract. After award of this contract a meeting will be held with all contractor representatives and the Contracting Officer to develop a plan of work coordination. In case of disagreement regarding use of an area the decision of the Contracting Officer will control. (CENAB)

1.10 CONTRACTOR USE OF HEATING PLANT: (1968) (MOD 1975)

1.10.1 Utilization of the Installed Heating System

The Contractor may, at his option, utilize the heating system installed under this contract to provide space heating prior to the time of completion of the building. All fuel-oil for such space heating and for the required tests of heating equipment shall be furnished by the Contractor and shall be of the type and grade specified.

1.10.2 Operations Statement

The heating system shall be operated only by qualified personnel and shall be operated with all auxiliaries and in accordance with the manufacturer's instructions and good operating practice. Boilers shall not be operated for space heating until the Contracting Officer is furnished a written operations statement signed by the Contractor certifying that all water treating equipment, combustion control equipment, and the boiler safety controls have been properly installed and are operating satisfactorily. When a boiler is to be shut down for a period of more than 5 days, the combustion chamber and the fire sides of all boiler tubes shall be cleaned thoroughly immediately after shutdown. If at any time the Contracting Officer determines that the equipment is being improperly operated or maintained, the Contractor may be directed to discontinue its use.

1.10.3 Controlled Temperature

Heating systems shall be operated and controlled to prevent temperature in any room or space in the building from exceeding 90 degrees F (32 degrees C).

1.10.4 Renovating the New Heating System

The Contractor shall, prior to the time of final acceptance of all work under this contract, place the heating system and related equipment in a condition equal to new. The combustion chamber and fire side of all boiler tubes shall be cleaned, burner nozzles shall be cleaned and adjusted, and air filters, and pipeline strainers shall be replaced or cleaned, as required. (CENAB)

1.11 MAINTENANCE OF UTILITIES: (FEB 1985)

Throughout construction, the Contractor shall provide and/or maintain toilet facilities for Government personnel. The Contractor shall provide alternate space heating for Government personnel when necessary during shutdown of the heating system. (CENAB)

1.12 ASBESTOS HANDLING AND REMOVAL (FEB 85)

Through site investigations, friable asbestos has not been found, however if asbestos is encountered, its testing, removal and disposal is covered in "CHANGES" clause of the Contract Clauses. (CENAB)

1.13 TIME EXTENSIONS FOR UNUSUALLY SEVERE WEATHER

1.13.1 Procedure for Determination

This provision specifies the procedure for determination of time extensions for unusually severe weather in accordance the contract clause entitled "Default: (Fixed Price Construction)". In order for the Contracting Officer to award a time extension under this clause, the following conditions must be satisfied:

a. The weather experienced at the project site during the contract period must be found to be unusually severe, that is, more severe than the adverse weather anticipated for the project location during any given month.

b. The unusually severe weather must actually cause a delay to the completion of the project. The delay must be beyond the control and without the fault or negligence of the contractor.

1.13.2 Anticipated Adverse Weather Delays

The following schedule of monthly anticipated adverse weather delays is based on National Oceanic and Atmospheric Administration (NOAA) or similar data for the project location and will constitute the base line for monthly weather time evaluations. The contractor's progress schedule must reflect these anticipated adverse weather delays in all weather dependent activities.

MONTHLY ANTICIPATED ADVERSE WEATHER DELAY
WORK DAYS BASED ON (5) DAY WORK WEEK

JAN	FEB	MAR	APR	MAY	JUN	JUL	AUG	SEP	OCT	NOV	DEC
7	6	6	7	7	6	4	5	3	5	4	4

1.13.3 Impact

Upon acknowledgment of the Notice to Proceed (NTP) and continuing throughout the contract, the contractor will record on the daily CQC report, the occurrence of adverse weather and resultant impact to normally scheduled work. Actual adverse weather delay days must prevent work on critical activities for 50 percent or more of the contractor's scheduled work day. The number of actual adverse weather delay days shall include days impacted by actual adverse weather (even if adverse weather occurred in previous month), be calculated chronologically from the first to the last day of each month, and be recorded as full days. If the number of actual adverse weather delay days exceeds the number of days anticipated in paragraph 13.2, above, the Contracting Officer will convert any qualifying delays to calendar days, giving full consideration for equivalent fair weather work days, and issue a modification in accordance with the contract clause entitled "Default (Fixed Price Construction)".

1.14 WORKING HOURS

WORKING HOURS: (DEC 93) It shall be the Contractors responsibility to obtain the working hours other than the normal five (5) day work week 08:00 am to 4:30 pm.

1.15 YEAR 2000 COMPLIANCE

1.15.1 General

All information technology systems and equipment under this contract designed to perform date/time processing shall be Year 2000 (Y2K) compliant. All information technology shall be able to accurately process date/time data (including, but not limited to, calculating, comparing, and sequencing) from, into, and between the twentieth and twenty-first centuries, and the years 1999 and 2000 and leap year calculations, to the extent that other information technology, used in combination with the information technology being acquired, properly exchanges date/time data with it.

a. Systems required to be Y2K compliant include, but are not limited to, elevator controls, heating ventilation and air conditioning (HVAC) controls, utility monitoring and control systems, fire alarm systems, electronic security systems, and many other related systems that control building environments or subsystems or are used for process control.

b. For the purpose of this requirement, information technology is any equipment or interconnected system or subsystem of equipment, that is used in the automatic acquisition, storage, manipulation, management, movement, control, display, switching, interchange, transmission, or reception of data or information, and includes computers, ancillary equipment, software, firmware, middleware and similar procedures, services (including support services), and related resources.

1.15.1.1 Test Requirements

Minimum Requirements: As a minimum, all equipment and systems shall be tested to assure that they correctly calculate critical Y2K dates, including, but not limited to:

a. 1 January 2000
b. 29 February 2000 - Required because 1900 was not a leap year.
c. 9 April 1999 - 99th day of the year, which may be 9999 in the Julian calendar, which may be interpreted as an error code.
d. 9 September 1999 - In systems using day, month, year date format, date may be 9999, which may be interpreted as an error code.
e. 10 January 2000 - The first date that requires 7 characters.
f. 10 October 2000 - The first date that requires 8 characters.

Each item and system shall be tested to assure that the above dates are calculated correctly when they are encountered while the equipment is powered up and functioning properly, and that they will return to the correct date after the date is encountered and the equipment is powered down and restarted.

1.15.2 High Priority Systems:

General

High priority systems are those systems that affect safety, security, and

the installation's ability to accomplish the facility's core mission. In all projects, electronic security, entry control systems, fire alarm systems, and other automated systems that are essential to facility operation are considered to be high priority systems. In medical projects, many other systems may be considered high priority systems because they could affect life safety, such as, emergency generators, uninterruptible power supplies (UPS), HVAC systems and controls, elevators, and lighting controls. As applicable, other high priority systems may include water supply treatment and distribution systems, and wastewater collection, treatment, and disposal systems.

1.15.2.1 High Priority System Testing

High priority systems, such as fire alarm and other life safety systems, electronic security, environment and health systems, and mission critical systems, shall be field tested for Y2K compliance prior to government acceptance. The Contractor shall develop a Y2K validation test procedure and submit the proposed procedure to the Contracting Officer for approval. No testing may be performed until the validation test procedure is approved. After approval the Contractor shall perform the validation test on each individual component or piece of equipment. In those cases where individual components or equipment are interconnected as a system or subsystem, the entire system or subsystem shall also be tested If there is an interface where time and date data is transferred to any other equipment or system, whether existing or contractor installed, the interface shall be included in the system validation test. The Contracting Officer and, as applicable, a representative from a COE Center of Expertise, must witness all testing.

1.15.2.2 Future Products:

The Contractor shall ensure products to be provided or maintained in the future under this contract, to include hardware, software, firmware, and middleware, whether acting along or combined as a system, shall be Year 2000 compliant.

1.15.2.3 Warranties

Minimum acceptable warranty requirements are specified in the technical specifications and in the Contract Clauses.

PART 2 PRODUCTS

NOT APPLICABLE

PART 3 EXECUTION

NOT APPLICABLE

-- End of Section --

SECTION 01060

SAFETY

PART 1 GENERAL

1.1 APPLICABLE PUBLICATION

The publications listed below form a part of this specification and are referred to in the text by the basic designation only.

U.S. ARMY CORPS OF ENGINEERS:

EM 385-1-1	(3 Sep 1996) U.S. Army Corps of Engineers Safety and Health Requirements Manual

1.2 SUBMITTALS

Government approval is required for submittals with a "GA" designation; submittals having an "FIO" designation are for information only. The following shall be submitted in accordance with Section 01330 SUBMITTAL PROCEDURES:

SD-01 Data

Safety Supervisor; FIO;AR.

A safety supervisor shall be responsible for overall supevision of accident prevention activities.

SD-09 Reports

Activity Phase Hazard Analysis Plan; FIO;AR.

The addressing of the activity phase hazard analysis plan for each activity performed in a phase of work.

Outline Report; GA|AR.

A report for each past activities review.

OSHA Log; FIO;AR.

A log shall be reported monthly for injuries.

SD-18 Records

Language Certificate; GA|AR.

It is the Contractors responsibility besure that all employees understand the basic english language.

1.3 GENERAL

The U.S. Army Corps of Engineers Safety and Health Requirements Manual, EM 385-1-1, and all subsequent revisions referred to in the Contract Clause

ACCIDENT PREVENTION of this contract, are hereby supplemented as follows:

a. The Contractor shall designate an employee responsible for overall supervision of accident prevention activities. Such duties shall include: (1) assuring applicable safety requirements are (a) communicated to the workers in a language they understand (reference EM 385-1-1, September 1996, 01.A.04). It is the Contractor's responsibility to ascertain if there are workers on the job who do not speak and/or understand the English language. If such workers are employed by the prime contractor or subcontractors, at any tier, it is the prime contractor's responsibility to insure that all safety programs, signs, and tool box meetings are communicated to the workers in a language they understand, and that a bilingual employee is on site at all time. If the contractor contends that interpreters and/or bilingual signs are not required, certification must be provided which verifies that all workers (whose native tongue is other than English) have a command of the English language sufficient to understand all direction, training and safety requirements, whether written or oral, and (b) incorporated in work methods, and (2) inspecting the work to ensure that safety measures and instructions are actually applied. The proposed safety supervisor's name and qualifications shall be submitted in writing for approval to the Contracting Officer's Representative. This individual must have prior experience as a safety engineer or be able to demonstrate his/her familiarity and understanding of the safety requirements over a prescribed trial period. The safety engineer shall have the authority to act on behalf of the Contractor's general management to take whatever action is necessary to assure compliance with safety requirements. The safety supervisor is required to be on the site when work is being performed.

b. Prior to commencement of any work at a job site, a preconstruction safety meeting shall be held between the Contractor and the Corps of Engineers Area/Resident Engineer to discuss the Contractor's safety program and in particular to review the following submittals:

(1) Contracts Accident Prevention Plan: An acceptable accident prevention plan, written by the prime Contractor for the specific work and implementing in detail the pertinent requirements of EM 385-1-1, shall be submitted for Government approval.

(2) Activity Phase Hazard Analysis Plan: Prior to beginning each major phase of work, an activity hazard analysis (phase plan) shall be prepared by the Contractor for that phase of work and submitted to the Contracting Officer's Representative for approval. A phase is defined as an operation involving a type of work presenting hazards not experienced in previous operations or where a new subcontractor or work crew is to perform work. The analysis shall address the hazards for each activity performed in the phase and shall present the procedures and safeguards necessary to eliminate the hazards or reduce the risk to an acceptable level.

c. Subsequent jobsite safety meetings shall be held as follows:

(1) A safety meeting shall be held at least once a month for all supervisors on the project to review past activities, to plan ahead for new or changed operations and to establish safe working procedures to anticipated hazards. An outline report of each monthly meeting shall be submitted to the Contracting Officer's Representative.

(2) At least one safety meeting shall be conducted weekly, or whenever new crews begin work, by the appropriate field supervisors or

foremen for all workers. An outline report of the meeting giving date, time, attendance, subjects discussed and who conducted it shall be maintained and copies furnished the designated authority on request.

1.4 ACCIDENTS

Chargeable accidents are to be investigated by both Contractor personnel and the Contracting Officer.

1.4.1 Accident Reporting, ENG FORM 3394

Section 1, Paragraph 01.D, OF EM 385-1-1 and the Contract Clause entitled ACCIDENT PREVENTION are amended as follows: The prime Contractor shall report on Eng Form 3394, supplied by the Contracting Officer, all injuries to his employees or subcontracors that result in lost time and all damage to property and/or equipment in excess of $2,000 per incident. Verbal notification of such accident shall be made to the Contracting Officer within 24 hours. A written report on the above noted form shall be submitted to the Contracting Officer within 72 hours following such accidents. The written report shall include the following:

a. A description of the circumstances leading up to the accident, the cause of the accident, and corrective measures taken to prevent recurrence.

b. A description of the injury and name and location of the medical facility giving examination and treatment.

c. A statement as to whether or not the employee was permitted to return to work after examination and treatment by the doctor, and if not, an estimate or statement of the number of days lost from work. If there have been days lost from work, state whether or not the employee has been re-examined and declared fit to resume work as of the date of the report.

1.4.2 OSHA Requirements

1.4.2.1 OSHA Log

A copy of the Contractor's OSHA Log of Injuries shall be forwarded monthly to the Contracting Officer.

1.4.2.2 OSHA Inspections

Contractors shall immediately notify the Contracting Officer when an OSHA Compliance official (Federal or State representative) presents his/her credentials and informs the Contractor that the workplace will be inspected for OSHA compliance. Contractors shall also notify the Contracting Officer upon determination that an exit interview will take place upon completion of the OSHA inspection. (NABSA OCT 05, 1976)

1.5 GOVERNMENT APPROVAL

Submittals shall be in accordance with Section 01330 SUBMITTAL PROCEDURES. All required submittals of items specified in this section shall be for information only, except for those items including, but not limited to, the following which shall be submitted for Government approval:

a. Written designation of safety representative.

b. Written project specific accident prevention plan.

c. Written activity phase hazard analysis plan.

PART 2 PRODUCT
NOT APPLICABLE

PART 3 EXECUTION
NOT APPLICABLE

-- End of Section --

SECTION 01090

SOURCES FOR REFERENCE PUBLICATIONS

1.1 REFERENCES

Various publications are referenced in other sections of the specifications to establish requirements for the work. These references are identified in each section by document number, date and title. The document number used in the citation is the number assigned by the sponsoring organization, e.g. UL 1 (1993; Rev thru Jan 1995) Flexible Metal Conduit. However, when the sponsoring organization has not assigned a number to a document, an identifying number has been assigned for convenience, e.g. UL's unnumbered 1995 edition of their Building Materials Directory is identified as UL-01 (1995) Building Materials Directory. The sponsoring organization number (UL 1) can be distinguished from an assigned identifying number (UL-01) by the lack of a dash mark (-) in the sponsoring organization assigned number.

1.2 ORDERING INFORMATION

The addresses of the organizations whose publications are referenced in other sections of these specifications are listed below, and if the source of the publications is different from the address of the sponsoring organization, that information is also provided. Documents listed in the specifications with numbers which were not assigned by the sponsoring organization should be ordered from the source by title rather than by number.

-- End of Section --

SECTION 01320

PROJECT SCHEDULE

PART 1 GENERAL

1.1 SUBMITTALS

Government approval is required for submittals with a "GA" designation; submittals having an "FIO" designation are for information only. The following shall be submitted in accordance with Section 01330 SUBMITTAL PROCEDURES:

SD-07 Schedules

Initial Project Schedule; GA|ED. Preliminary Project Schedule; GA|ED. Periodic Schedule Updates; GA|ED.

Three copies of the schedules showing codes, values, categories, numbers, items, etc., as required.

SD-08 Statements

Qualifications; GA|ED.

Documentation showing qualifications of personnel preparing schedule reports.

SD-09 Reports

Narrative Report; GA|AR. Schedule Reports; GA|AR.

Three copies of the reports showing numbers, descriptions, dates, float, starts, finishes, durations, sequences, etc., as required.

1.2 QUALIFICATIONS

The Contractor shall designate an authorized representative who shall be responsible for the preparation of all required project schedule reports. This person shall have previously created and reviewed computerized schedules. Qualifications of this individual shall be submitted to the Contracting Officer for review with the Preliminary Project Schedule submission.

PART 2 PRODUCTS (Not Applicable)

PART 3 EXECUTION

3.1 GENERAL

Pursuant to the Contract Clause, SCHEDULE FOR CONSTRUCTION CONTRACTS, a Project Schedule as described below shall be prepared. The scheduling of construction shall be the responsibility of the Contractor. Contractor management personnel shall actively participate in its development. Subcontractors and suppliers working on the project shall also contribute in developing and maintaining an accurate Project Schedule. The approved

Project Schedule shall be used to measure the progress of the work, to aid in evaluating time extensions, and to provide the basis of all progress payments.

3.1.1 Examples

An example of one of the numerous acceptable types of scheduling systems is shown in Corps of Engineers Pamphlet EP 415-1-4 entitled "Network Analysis System Guide", single copies of which will be made available to bona fide bidders on request from Publications Depot 2803 52nd Avenue, Hyattsville, MD. 20781-1102, telephone (410)436-2063. Other systems which are designed to serve the same purpose and employ the same basic principles as contained herein will be accepted subject to the approval of the Contracting Officer.

3.1.2 Format

The Contractor shall submit his schedule on 3-1/2 inch disk. The schedule files must be legible on an IBM PC/XT or compatible system, and utilize the Primavera scheduling program. This requirement is not intended to limit the Contractor to the use of only this program for his scheduling system. However, if the schedule files are provided in any other format for any other scheduling program, any and all of the other software needed to make the data files legible on the IBM PC/XT or compatible must also be provided, and shall remain available to the Government until fiscal completion of the contract. Additional disk submittals will only be required if there is a change in the schedule order or activity interdependence."

3.2 BASIS FOR PAYMENT

The schedule shall be the basis for measuring Contractor progress. Lack of an approved schedule or scheduling personnel shall result in an inability of the Contracting Officer to evaluate Contractor progress for the purposes of payment. Failure of the Contractor to provide all information, as specified below, shall result in the disapproval of the entire Project Schedule submission and the inability of the Contracting Officer to evaluate Contractor progress for payment purposes. In the case where Project Schedule revisions have been directed by the Contracting Officer and those revisions have not been included in the Project Schedule, then the Contracting Officer may hold retainage up to the maximum allowed by contract, each payment period, until revisions to the Project Schedule have been made.

3.3 PROJECT SCHEDULE

The computer software system utilized by the Contractor to produce the Project Schedule shall be capable of providing all requirements of this specification. Failure of the Contractor to meet the requirements of this specification shall result in the disapproval of the schedule. Manual methods used to produce any required information shall require approval by the Contracting Officer.

3.3.1 Use of the Critical Path Method

The Critical Path Method (CPM) of network calculation shall be used to generate the Project Schedule. The Contractor shall provide the Project Schedule in either the Precedence Diagram Method (PDM) or the Arrow Diagram Method (ADM).

3.3.2 Level of Detail Required

With the exception of the initial and preliminary schedule submission, the Project Schedule shall include an appropriate level of detail. Failure to develop or update the Project Schedule or provide data to the Contracting Officer at the appropriate level of detail, as specified by the Contracting Officer, shall result in the disapproval of the schedule. The Contracting Officer will use, but is not limited to, the following conditions to determine the appropriate level of detail to be used in the Project Schedule.

3.3.2.1 Activity Durations

Contractor submissions shall follow the direction of the Contracting Officer regarding reasonable activity durations. Reasonable durations are those that allow the progress of activities to be accurately determined between payment periods (usually less than 2 percent of all non-procurement activities' Original Durations shall be greater than 20 days).

3.3.2.2 Procurement Activities

Tasks related to the procurement of long lead materials or equipment shall be included as separate activities in the project schedule. Long lead materials and equipment are those materials that have a procurement cycle of over 90 days. Examples of procurement process activities include, but are not limited to: submittals, approvals, procurement, fabrication, delivery, installation, start-up, and testing.

3.3.2.3 Government Activities

Government and other agency activities that could impact progress shall be shown. These activities include, but are not limited to: approvals, inspections, utility tie-in, Government Furnished Equipment (GFE) and notice to proceed for phasing requirements.

3.3.2.4 Workers Per Day

All activities shall have an estimate of the average number of workers per day that are expected to be used during the execution of the activity. If no workers are required for an activity, in the case of activities related to procurement, for example, then the activity shall be identified as using zero workers per day. The workers per day information for each activity shall be identified by the Workers Per Day Code.

3.3.2.5 Modification or Claim Number

Any activity that is added or changed by contract modification or used to justify claimed time shall be identified by a mod or claim code that changed the activity. Activities shall not belong to more than one modification or claim item. The modification or claim number of each activity shall be identified by the Mod or Claim Number.

3.3.2.6 Category of Work

All Activities shall be identified in the project schedule according to the category of work which best describes the activity. Category of work refers, but is not limited, to the procurement chain of activities including such items as submittals, approvals, procurement, fabrication, delivery, installation, start-up, and testing. The category of work for

each activity shall be identified by the Category of Work Code.

3.3.2.7 Feature of Work

All activities shall be identified in the project schedule according to the feature of work to which the activity belongs. Feature of work refers, but is not limited to a work breakdown structure for the project. The feature of work for each activity shall be identified by the Feature of Work Code.

3.3.3 Scheduled Project Completion

The schedule interval shall extend from notice-to-proceed to the contract completion date.

3.3.3.1 Project Start Date

The schedule shall start no earlier than the date that the Notice to Proceed (NTP) was acknowledged. The Contractor shall include as the first activity in the project schedule an activity called "Start Project". The "Start Project" activity shall have: a "ES" constraint, a constraint date equal to the date that the NTP was acknowledged, and a zero day duration.

3.3.3.2 Constraint of Last Activity

Completion of the last activity in the schedule shall be constrained by the contract completion date. Calculation on project updates shall be such that if the early finish of the last activity falls after the contract completion date, then the float calculation shall reflect a negative float on the critical path. The Contractor shall include as the last activity in the project schedule an activity call "End Project". The "End Project" activity shall have: a "LF" constraint, a constraint date equal to the completion date for the project, and a zero day duration.

3.3.3.3 Early Project Completion

In the event the project schedule shows completion of the project prior to the contract completion date, the Contractor shall identify those activities that have been accelerated and/or those activities that are scheduled in parallel to support the Contractor's "early" completion. Contractor shall specifically address each of the activities noted at every project schedule update period to assist the Contracting Officer in evaluating the Contractor's ability to actually complete prior to the contract period.

3.3.4 Interim Completion Dates

Contractually specified interim completion dates shall also be constrained to show negative float if the early finish date of the last activity in that phase falls after the interim completion date.

3.3.5 Default Progress Data Disallowed

Actual Start and Finish dates shall not be automatically updated by default mechanisms that may be included in CPM scheduling software systems. Actual Start and Finish dates on the CPM schedule shall match those dates provided from Contractor Quality Control Reports. Failure of the Contractor to document the Actual Start and Finish dates on the Daily Quality Control report for every in-progress or completed activity and Ensure that the data contained on the Daily Quality Control reports is the sole basis for

schedule updating shall result in the disapproval of the Contractor's schedule and the inability of the Contracting Officer to evaluate Contractor progress for payment purposes.

3.3.6 Out-of-Sequence Progress

Activities that have posted progress without predecessors being completed (Out-of-Sequence Progress) will be allowed only on a case-by-case approval of the Contracting Officer. The Contracting Officer may direct that changes in schedule logic be made to correct any or all out-of-sequence work.

3.3.7 Extended Non-Work Periods

Designation of Holidays to account for non-work periods of over 5 days will not be allowed. Non-work periods of over 5 days shall be identified by addition of activities that represent the delays. Modifications to the logic of the project schedule shall be made to link those activities that may have been impacted by the delays to the newly added delay activities.

3.3.8 Negative Lags

Lag durations contained in the project schedule shall not have a negative value.

3.4 PROJECT SCHEDULE SUBMISSIONS

The Contractor shall provide the submissions as described below. The data disk, reports, and network diagrams required for each submission are contained in paragraph SUBMISSION REQUIREMENTS.

3.4.1 Preliminary Project Schedule Submission

The Preliminary Project Schedule, defining the Contractor's planned operations for the first 60 calendar days shall be submitted for approval within 20 calendar days after Notice to Proceed is acknowledged. The approved preliminary schedule shall be used for payment purposes not to exceed 60 calendar days after Notice to Proceed.

3.4.2 Initial Project Schedule Submission

The Initial Project Schedule shall be submitted for approval within 40 calendar days after Notice to Proceed. The schedule shall provide a reasonable sequence of activities which represent work through the entire project and shall be at a reasonable level of detail.

3.4.3 Periodic Schedule Updates

Based on the result of progress meetings, specified in "Periodic Progress Meetings," the Contractor shall submit periodic schedule updates. These submissions shall enable the Contracting Officer or to assess Contractor's progress. If the Contractor fails or refuses to furnish the information and project schedule data, which in the judgement of the Contracting Officer or authorized representative, is necessary for verifying the contractor's progress, the Contractor shall be deemed not to have provided an estimate upon which progress payment may be made.

3.4.4 Standard Activity Coding Dictionary

The Contractor shall submit, with the Initial Project Schedule, a coding scheme that shall be used throughout the project for all activity codes contained in the schedule. The coding scheme submitted shall list the values for each activity code category and translate those values into project specific designations. For example, a Responsibility Code Value, "ELE", may be identified as "Electrical Subcontractor." Activity code values shall represent the same information throughout the duration of the contract. Once approved with the Initial Project Schedule submission, changes to the activity coding scheme must be approved by the Contracting Officer.

3.5 SUBMISSION REQUIREMENTS

The following items shall be submitted by the Contractor for the initial submission, and every periodic project schedule update throughout the life of the project:

3.5.1 Data Disks

Three data disks containing the project schedule shall be provided. Data on the disks shall be in the format specified in paragraph no. 3.1 above.

3.5.1.1 File Medium

Required data shall be submitted on 3.5 disks, formatted to hold 1.44 MB of data, under the MS-DOS Version 6.22 operating system.

3.5.1.2 Disk Label

A permanent exterior label shall be affixed to each disk submitted. The label shall indicate the type of schedule (Initial, Update, or Change), full contract number, project name, project location, data date, name and telephone number or person responsible for the schedule, and the MS-DOS version used to format the disk.

3.5.1.3 File Name

Each file submitted shall have a name related to either the schedule data date, project name, or contract number. The Contractor shall develop a naming convention that will ensure that the names of the files submitted are unique. The Contractor shall submit the file naming convention to the Contracting Officer for approval.

3.5.2 Narrative Report

A Narrative Report shall be provided with each update of the project schedule. This report shall be provided as the basis of the Contractor's progress payment request. The Narrative Report shall include: a description of activities along the 4 most critical paths, a description of current and anticipated problem areas or delaying factors and their impact, and an explanation of corrective actions taken.

3.5.3 Approved Changes Verification

Only project schedule changes that have been previously approved by the Contracting Officer shall be included in the schedule submission. The Narrative Report shall specifically reference, on an activity by activity basis, all changes made since the previous period and relate each change to documented, approved schedule changes.

3.5.4 Schedule Reports

The format for each activity for the schedule reports listed below shall contain: Activity Numbers, Activity Description, Original Duration, Remaining Duration, Early Start Date, Early Finish Date, Late Start Date, Late Finish Date, Total Float. Actual Start and Actual Finish Dates shall be printed for those activities in progress or completed.

3.5.4.1 Activity Report

A list of all activities sorted according to activity number or "I-NODE" AND "J-NODE" and then sorted according to Early Start Date. For completed activities the Actual Start Date shall be used as the secondary sort.

3.5.4.2 Logic Report

A list of Preceding and Succeeding activities for every activity in ascending order by activity number and then sorted according to Early Start Date. For completed activities the Actual Start Date shall be used as the secondary sort.

3.5.4.3 Total Float Report

A list of all activities sorted in ascending order of total float. Activities which have the same amount of total float shall be listed in ascending order of Early Start Dates.

3.5.4.4 Earnings Report

A compilation of the Contractor's Total Earnings on the project from the Notice to Proceed until the most recent Monthly Progress Meeting. This report shall reflect the Earnings of specific activities based on the agreements made in the field and approved between the Contractor and Contracting Officer at the most recent Monthly Progress Meeting. Provided that the Contractor has provided a complete schedule update, this report shall serve as the basis of determining Contractor Payment. Activities shall be grouped by bid item and sorted by activity numbers. This report shall: sum all activities in a bid item and provide a bid item percent; and complete and sum all bid items to provide a total project percent complete. The printed report shall contain, for each activity: Activity Number or "i-node" and "j-node", Activity Description, Original Budgeted Amount, Total Quantity, Quantity to Date, Percent Complete (based on cost), Earnings to Date.

3.5.5 Network Diagram

The network diagram shall be required on the initial schedule submission and on quarterly schedule update submissions. The network diagram shall depict and display the order and interdependence of activities and the sequence in which the work is to be accomplished. The Contracting Officer will use, but is not limited to, the following conditions to review compliance with this paragraph:

3.5.5.1 Continuous Flow

Diagrams shall show a continuous flow from left to right with no arrows from right to left. The activity or event number, description, duration, and estimated earned value shall be shown on the diagram.

3.5.5.2 Project Milestone Dates

Dates shall be shown on the diagram for start of project, any contract required interim completion dates, and contract completion dates.

3.5.5.3 Critical Path

The critical path shall be clearly shown.

3.5.5.4 Banding

Activities shall be grouped to assist in the understanding of the activity sequence. Typically, this flow will group activities by category of work, work area and/or responsibility.

3.5.5.5 S-Curves

Earnings curves showing projected early and late earnings and earnings to date.

3.6 PERIODIC PROGRESS MEETINGS

Progress meetings to discuss payment shall include a monthly onsite meeting or other regular intervals mutually agreed to at the preconstruction conference. During this meeting the Contractor shall describe, on an activity by activity basis, all proposed revisions and adjustments to the project schedule required to reflect the current status of the project. The Contracting Officer will approve activity progress, proposed revisions, and adjustments as appropriate.

3.6.1 Meeting Attendance

The Contractor's Project Manager and Scheduler shall attend the regular progress meeting.

3.6.2 Update Submission Following Progress Meeting

A complete update of the project schedule containing all approved progress, revisions, and adjustments, based on the regular progress meeting, shall be submitted not later than 4 working days after the monthly progress meeting.

3.6.3 Progress Meeting Contents

Update information, including Actual Start Dates, Actual Finish Dates, Remaining Durations, and Cost-to-Date shall be subject to the approval of the Contracting Officer. The following minimum set of items which the Contractor shall address, on an activity by activity basis, during each progress meeting.

3.6.3.1 Start and Finish Dates

The Actual Start and Actual Finish dates for each activity currently in-progress or completed activities.

3.6.3.2 Time Completion

The estimated Remaining Duration for each activity in-progress. Time-based progress calculations must be based on Remaining Duration for each activity.

3.6.3.3 Cost Completion

The earnings for each activity started. Payment will be based on earnings for each in-progress or completed activity. Payment for individual activities will not be made for work that contains quality defects. A portion of the overall project amount may be retained based on delays of activities.

3.6.3.4 Logic Changes

All logic changes pertaining to Notice to Proceed on change orders, change orders to be incorporated into the schedule, contractor proposed changes in work sequence, corrections to schedule logic for out-of-sequence progress, lag durations, and other changes that have been made pursuant to contract provisions shall be specifically identified and discussed.

3.6.3.5 Other Changes

Other changes required due to delays in completion of any activity or group of activities include: 1) delays beyond the Contractor's control, such as strikes and unusual weather. 2) delays encountered due to submittals, Government Activities, deliveries or work stoppages which make re-planning the work necessary, and 3) a schedule which does not represent the actual prosecution and progress of the work.

3.7 REQUESTS FOR TIME EXTENSIONS

In the event the Contractor requests an extension of the contract completion date, he shall furnish such justification, project schedule data and supporting evidence as the Contracting Officer may deem necessary for a determination as to whether or not the Contractor is entitled to an extension of time under the provisions of the contract. Submission of proof of delay, based on revised activity logic, duration, and costs (updated to the specific date that the delay occurred) is obligatory to any approvals.

3.7.1 Justification of Delay

The project schedule shall clearly display that the Contractor has used, in full, all the float time available for the work involved with this request. The Contracting Officer's determination as to the number of allowable days of contract extension shall be based upon the project schedule updates in effect for the time period in question, and other factual information. Actual delays that are found to be caused by the Contractor's own actions, which result in the extension of the schedule, will not be a cause for a time extension to the contract completion date.

3.7.2 Submission Requirements

The Contractor shall submit a justification for each request for a change in the contract completion date of under 2 weeks based upon the most recent schedule update at the time of the Notice to Proceed or constructive direction issued for the change. Such a request shall be in accordance with the requirements of other appropriate Contract Clauses and shall include, as a minimum:

a. A list of affected activities, with their associated project schedule activity number.

b. A brief explanation of the causes of the change.

c. An analysis of the overall impact of the changes proposed.

d. A sub-network of the affected area.

Activities impacted in each justification for change shall be identified by a unique activity code contained in the required data file.

3.7.3 Additional Submission Requirements

For any requested time extension of over 2 weeks, the Contracting Officer may request an interim update with revised activities for a specific change request. The Contractor shall provide this disk within 4 days of the Contracting Officer's request.

3.8 DIRECTED CHANGES

If Notice to Proceed (NTP) is issued for changes prior to settlement of price and/or time, the Contractor shall submit proposed schedule revisions to the Contracting Officer within 2 weeks of the NTP being issued. The proposed revisions to the schedule will be approved by the Contracting Officer prior to inclusion of those changes within the project schedule. If the Contractor fails to submit the proposed revisions, the Contracting Officer may furnish the Contractor suggested revisions to the project schedule. The Contractor shall include these revisions in the project schedule until revisions are submitted, and final changes and impacts have been negotiated. If the Contractor has any objections to the revisions furnished by the Contracting Officer, the Contractor shall advise the Contracting Officer within 2 weeks of receipt of the revisions. Regardless of the objections, the Contractor shall continue to update the schedule with the Contracting Officer's revisions until a mutual agreement in the revisions is reached. If the Contractor fails to submit alternative revisions within 2 weeks of receipt of the Contracting Officer's proposed revisions, the Contractor will be deemed to have concurred with the Contracting Officer's proposed revisions. The proposed revisions will then be the basis for an equitable adjustment for performance of the work.

3.9 OWNERSHIP OF FLOAT

Float available in the schedule, at any time, shall not be considered for the exclusive use of either the Government or the Contractor.

-- End of Section --

SECTION 01330

SUBMITTAL PROCEDURES

PART 1 GENERAL

1.1 SUBMITTAL IDENTIFICATION

Submittals required are identified by SD numbers as follows:

1.2 SUBMITTAL CLASSIFICATION

Submittals are classified as follows:

1.2.1 Government Approved

Governmental approval is required for extensions of design, critical materials, deviations, equipment whose compatibility with the entire system must be checked, and other items as designated by the Contracting Officer. Within the terms of the Contract Clause entitled "Specifications and Drawings for Construction," they are considered to be "shop drawings."

1.2.2 Information Only

All submittals not requiring Government approval will be for information only. They are not considered to be "shop drawings" within the terms of the Contract Clause referred to above.

1.3 APPROVED SUBMITTALS

The Contracting Officer's approval of submittals shall not be construed as a complete check, but will indicate only that the general method of construction, materials, detailing and other information are satisfactory. Approval will not relieve the Contractor of the responsibility for any error which may exist, as the Contractor under the CQC requirements of this contract is responsible for dimensions, the design of adequate connections and details, and the satisfactory construction of all work. After submittals have been approved by the Contracting Officer, no resubmittal for the purpose of substituting materials or equipment will be considered unless accompanied by an explanation of why a substitution is necessary.

1.4 DISAPPROVED SUBMITTALS

The Contractor shall make all corrections required by the Contracting Officer and promptly furnish a corrected submittal in the form and number of copies specified for the initial submittal. If the Contractor considers any correction indicated on the submittals to constitute a change to the contract, a notice in accordance with the Contract Clause "Changes" shall be given promptly to the Contracting Officer.

1.5 WITHHOLDING OF PAYMENT

Payment for materials incorporated in the work will not be made if required approvals have not been obtained.

PART 2 PRODUCTS (Not Applicable)

PART 3 EXECUTION

3.1 GENERAL

The Contractor shall make submittals as required by the specifications. The Contracting Officer may request submittals in addition to those specified when deemed necessary to adequately describe the work covered in the respective sections. Units of weights and measures used on all submittals shall be the same as those used in the contract drawings. Each submittal shall be complete and in sufficient detail to allow ready determination of compliance with contract requirements. Prior to submittal, all items shall be checked and approved by the Contractor's Quality Control (CQC) representative and each item shall be stamped, signed, and dated by the CQC representative indicating action taken. Proposed deviations from the contract requirements shall be clearly identified. Submittals shall include items such as: Contractor's, manufacturer's, or fabricator's drawings; descriptive literature including (but not limited to) catalog cuts, diagrams, operating charts or curves; test reports; test cylinders; samples; O&M manuals (including parts list); certifications; warranties; and other such required submittals. Submittals requiring Government approval shall be scheduled and made prior to the acquisition of the material or equipment covered thereby. Samples remaining upon completion of the work shall be picked up and disposed of in accordance with manufacturer's Material Safety Data Sheets (MSDS) and in compliance with existing laws and regulations.

3.2 SUBMITTAL REGISTER (ENG FORM 4288)

At the end of this section is one set of ENG Form 4288 listing items of equipment and materials for which submittals are required by the specifications; this list may not be all inclusive and additional submittals may be required. The Contractor will also be given the submittal register as a diskette containing the computerized ENG Form 4288 and instructions on the use of the diskette. Columns "d" through "r" have been completed by the Government; the Contractor shall complete columns "a" and "s" through "u" and submit the forms (hard copy plus associated electronic file) to the Contracting Officer for approval within 30 calendar days after Notice to Proceed. The Contractor shall keep this diskette up-to-date and shall submit it to the Government together with the monthly payment request. The approved submittal register will become the scheduling document and will be used to control submittals throughout the life of the contract. The submittal register and the progress schedules shall be coordinated.

3.3 SCHEDULING

Submittals covering component items forming a system or items that are interrelated shall be scheduled to be coordinated and submitted concurrently. Certifications to be submitted with the pertinent drawings shall be so scheduled. Adequate time (a minimum of 30 calendar days exclusive of mailing time) shall be allowed and shown on the register for review and approval. No delay damages or time extensions will be allowed for time lost in late submittals.

3.4 TRANSMITTAL FORM (ENG FORM 4025)

The sample transmittal form (ENG Form 4025) attached to this section shall be used for submitting both Government approved and information only

submittals in accordance with the instructions on the reverse side of the form. These forms will be furnished to the Contractor. This form shall be properly completed by filling out all the heading blank spaces and identifying each item submitted. Special care shall be exercised to ensure proper listing of the specification paragraph and/or sheet number of the contract drawings pertinent to the data submitted for each item.

3.5 SUBMITTAL PROCEDURE

Submittals shall be made as follows:

3.5.1 Procedures

In the signature block provided on ENG Form 4025 the Contractor certifies that each item has been reviewed in detail and is correct and is in strict conformance with the contract drawings and specifications unless noted otherwise. The accuracy and completeness of submittals is the responsibility of the Contractor. Any costs due to resubmittal of documents caused by inaccuracy, lack of coordination, and/or checking shall be the responsibility of the Contractor. This shall include the handling and review time on the part of the Government. Each variation from the contract specifications and drawings shall be noted on the form; and, attached to the form, the Contractor shall set forth, in writing, the reason for and description of such variations. If these requirements are not met, the submittal may be returned for corrective action.

3.5.2 Deviations

For submittals which include proposed deviations requested by the Contractor, the column "variation" of ENG Form 4025 shall be checked. The Contractor shall set forth in writing the reason for any deviations and annotate such deviations on the submittal. The Government reserves the right to rescind inadvertent approval of submittals containing unnoted deviations.

3.6 CONTROL OF SUBMITTALS

The Contractor shall carefully control his procurement operations to ensure that each individual submittal is made on or before the Contractor scheduled submittal date shown on the approved "Submittal Register."

3.7 GOVERNMENT APPROVED SUBMITTALS

Upon completion of review of submittals requiring Government approval, the submittals will be identified as having received approval by being so stamped and dated. Four (4) copies of the submittal will be retained by the Contracting Officer and two (2) copies of the submittal will be returned to the Contractor.

3.8 INFORMATION ONLY SUBMITTALS

Normally submittals for information only will not be returned. Approval of the Contracting Officer is not required on information only submittals. The Government reserves the right to require the Contractor to resubmit any item found not to comply with the contract. This does not relieve the Contractor from the obligation to furnish material conforming to the plans and specifications; will not prevent the Contracting Officer from requiring removal and replacement of nonconforming material incorporated in the work; and does not relieve the Contractor of the requirement to furnish samples

for testing by the Government laboratory or for check testing by the Government in those instances where the technical specifications so prescribe.

3.9 STAMPS

Stamps used by the Contractor on the submittal data to certify that the submittal meets contract requirements shall be similar to the following:

CONTRACTOR

(Firm Name)

_____ Approved

_____ Approved with corrections as noted on submittal data and/or attached sheets(s).

SIGNATURE: _____

TITLE: _____

DATE: _____

3.10 COLOR BOARDS (SEP 1998)

The Contractor shall submit four sets of color boards and finish samples at one time within 90 days after the construction contract notice-to-proceed, but more than 30 days prior to ordering materials. The Contractor shall obtain approval of the total construction color boards before starting any finish work involving any item included on the submission. This sample submittal package shall include all visible exterior and interior materials and finishes which are a part of the building structure or built-in items to be provided by the contract. The samples shall be submitted in the following format:

a) Provide the samples on 215.9 mm x 279.4 mm board modules with a maximum spread of 647.7 mm x 838.2 mm for foldouts. Label the modules with the project titles and design them to fit on a standard loose-leaf, three-post binder. The modules shall support and anchor all samples. Anchor large or heavy samples with mechanical fasteners. Samples must be labeled in accordance with the finish schedule.

b) Organize the submittals in a logical manner to allow a fast review. Write descriptions and explanations clearly. Drawings and photographs must be clear and concise.

c) Organize samples by scheme with a separate scheme for each room or for groups of rooms with the same scheme. Coordinate the schemes by room names and numbers shown on the architectural floor plans and room finish and color schedule. Include floor plans and schedules in modules.

d) Indicate true pattern color and texture for interior material and finish samples. Carpet samples shall be large enough to indicate a complete pattern or design, but not less than 76.2 mm x 127 mm.

e) Include color/finish pattern and texture for exterior materials and finishes.

f) Provide at least a 152.4 mm x 152.4 mm square sample where either interior or exterior special finishes, such as architectural concrete or prefinished textured metal panels, are required.

-- End of Section --

TRANSMITTAL OF SHOP DRAWINGS, EQUIPMENT DATA, MATERIAL SAMPLES, OR MANUFACTURER'S CERTIFICATES OF COMPLIANCE

(Read instructions on the reverse side prior to initiating this form)

DATE

TRANSMITTAL NO.

SECTION I - REQUEST FOR APPROVAL OF THE FOLLOWING ITEMS *(This section will be initiated by the contractor)*

TO:

FROM:

CONTRACT NO.

CHECK ONE:
☐ THIS IS A NEW TRANSMITTAL
☐ THIS IS A RESUBMITTAL OF TRANSMITTAL _____

SPECIFICATION SEC. NO. *(Cover only one section with each transmittal)*

PROJECT TITLE AND LOCATION

CHECK ONE: THIS TRANSMITTAL IS FOR ☐ FIO ☐ GOV'T. APPROVAL

ITEM NO. *a.*	DESCRIPTION OF ITEM SUBMITTED *(Type size, model number/etc.)* *b.*	MFG OR CONTR. CAT., CURVE DRAWING OR BROCHURE NO. *(See Instruction no. 8)* *c.*	NO. OF COPIES *d.*	CONTRACT REFERENCE DOCUMENT		FOR CONTRACTOR USE CODE *g.*	VARIATION *(See Instruction No. 6)* *h.*	FOR CE USE CODE *i.*
				SPEC. PARA. NO. *e.*	DRAWING SHEET NO. *f.*			

REMARKS

I certify that the above submitted items have been reviewed in detail and are correct and in strict conformance with the contract drawings and specifications except as other wise stated.

_____

NAME AND SIGNATURE OF CONTRACTOR

SECTION II - APPROVAL ACTION

ENCLOSURES RETURNED *(List by Item No.)*

NAME, TITLE AND SIGNATURE OF APPROVING AUTHORITY

DATE

INSTRUCTIONS

1. Section I will be initiated by the Contractor in the required number of copies.

2. Each transmittal shall be numbered consecutively in the space provided for "Transmittal No.". This number, in addition to the contract number, will form a serial number for identifying each submittal. For new submittals or resubmittals mark the appropriate box; on resubmittals, insert transmittal number of last submission as well as the new submittal number.

3. The "Item No." will be the same "Item No." as indicated on ENG FORM 4288-R for each entry on this form.

4. Submittals requiring expeditious handling will be submitted on a separate form.

5. Separate transmittal form will be used for submittals under separate sections of the specifications.

6. A check shall be placed in the "Variation" column when a submittal is not in accordance with the plans and specifications--also, a written statement to that effect shall be included in the space provided for "Remarks".

7. Form is self-transmittal, letter of transmittal is not required.

8. When a sample of material or Manufacturer's Certificate of Compliance is transmitted, indicate "Sample" or "Certificate" in column c, Section I.

9. U.S. Army Corps of Engineers approving authority will assign action codes as indicated below in space provided in Section I, column i to each item submitted. In addition they will ensure enclosures are indicated and attached to the form prior to return to the contractor. The Contractor will assign action codes as indicated below in Section I, column g, to each item submitted.

THE FOLLOWING ACTION CODES ARE GIVEN TO ITEMS SUBMITTED

A -- Approved as submitted.

B -- Approved, except as noted on drawings.

C -- Approved, except as noted on drawings. Refer to attached sheet resubmission required.

D -- Will be returned by separate correspondence.

E -- Disapproved (See attached).

F -- Receipt acknowledged.

FX -- Receipt acknowledged, does not comply as noted with contract requirements.

G -- Other *(Specify)*

10. Approval of items does not relieve the contractor from complying with all the requirements of the contract plans and specifications.

(Reverse of ENG Form 4025-R)

SUBMITTAL REGISTER
(ER 415 1-10)

CONTRACT NO.

TITLE AND LOCATION
Defense Security Service, Ft. Meade, MD

CONTRACTOR

SPECIFICATION SECTION
01000

ACTIVITY NO a.	TRANS-MITTAL NO. b.	ITEM NO c.	SPECIFICATION PARAGRAPH NUMBER d.	DESCRIPTION OF ITEM SUBMITTED e.	TYPE OF SUBMITTAL: DATA f.	DRAWINGS g.	INSTRUCTIONS h.	SCHEDULES i.	STATEMENTS j.	REPORTS k.	CERTIFICATES l.	SAMPLES m.	RECORDS n.	O&M MANUALS o.	CLASSIFICATION: INFORMATION ONLY p.	GOVERNMENT APPROVED q.	REVIEWER r.	CONTRACTOR SCHEDULE DATES: SUBMIT s.	APPROVAL NEEDED BY t.	MATERIAL NEEDED BY u.	CONTRACTOR ACTION: CODE v.	DATE w.	SUBMIT TO GOVERN-MENT x.	GOVERNMENT ACTION: CODE y.	DATE z.	REMARKS aa.
			1.6	Cost or Pricing Data	X											X	AR									
			1.7	Equipment Data	X										X		AR									
			1.8	O and M Data			X								X		AR									
			1.2	Progress Schedule				X								X	AR									
			1.2.2	Modified Chart				X								X	AR									
			1.1	Title Evidence									X		X		AR									
			1.1	Invoice Copies									X		X		AR									
			1.1	Payment Evidence									X		X		AR									
			1.10	Photographs									X		X		AR									

SUBMITTAL REGISTER
(ER 415 1-10)

CONTRACT NO.

TITLE AND LOCATION
Defense Security Service, Ft. Meade, MD

CONTRACTOR

SPECIFICATION SECTION
01050

ACTIVITY NO. a.	TRANS-MITTAL NO. b.	ITEM NO c.	SPECIFICATION PARAGRAPH NUMBER d.	DESCRIPTION OF ITEM SUBMITTED e.	TYPE OF SUBMITTAL: DATA f.	DRAWINGS g.	INSTRUCTIONS h.	SCHEDULES i.	STATEMENTS j.	REPORTS k.	CERTIFICATES l.	SAMPLES m.	RECORDS n.	O&M MANUALS o.	CLASSIFICATION: INFORMATION ONLY p.	GOVERNMENT APPROVED q.	REVIEWER r.	CONTRACTOR SCHEDULE DATES: SUBMIT s.	APPROVAL NEEDED BY t.	MATERIAL NEEDED BY u.	CONTRACTOR ACTION: CODE v.	DATE w.	SUBMIT TO GOVERN-MENT x.	GOVERNMENT ACTION: CODE y.	DATE z.	REMARKS aa.
			1.4.2	Shut Down Request				X								X	AR									
			1.10.2	Operations Statement							X				X		AR									

SUBMITTAL REGISTER
(ER 415 1-10)

CONTRACT NO.

TITLE AND LOCATION
Defense Security Service, Ft. Meade, MD

CONTRACTOR

SPECIFICATION SECTION
01060

ACTIVITY NO. a.	TRANS-MITTAL NO. b.	ITEM NO c.	SPECIFICATION PARAGRAPH NUMBER d.	DESCRIPTION OF ITEM SUBMITTED e.	TYPE OF SUBMITTAL: DATA f.	DRAWINGS g.	INSTRUCTIONS h.	SCHEDULES i.	STATEMENTS j.	REPORTS k.	CERTIFICATES l.	SAMPLES m.	RECORDS n.	O&M MANUALS o.	CLASSIFICATION: INFORMATION ONLY p.	GOVERNMENT APPROVED q.	REVIEWER r.	CONTRACTOR SCHEDULE DATES: SUBMIT s.	APPROVAL NEEDED BY t.	MATERIAL NEEDED BY u.	CONTRACTOR ACTION: CODE v.	DATE w.	SUBMIT TO GOVERN-MENT x.	GOVERNMENT ACTION: CODE y.	DATE z.	REMARKS aa.
			1.2	Safety Supervisor	X										X		AR									
			1.2	Activity Phase Hazard Analysis Plan						X					X		AR									
			1.2	Outline Report						X						X	AR									
			1.2	OSHA Log						X					X		AR									
			1.2	Language Certificate									X			X	AR									

SUBMITTAL REGISTER
(ER 415 1-10)

CONTRACT NO.

TITLE AND LOCATION
Defense Security Service, Ft. Meade, MD

CONTRACTOR

SPECIFICATION SECTION
01320

ACTIVITY NO. a.	TRANS-MITTAL NO. b.	ITEM NO c.	SPECIFICATION PARAGRAPH NUMBER d.	DESCRIPTION OF ITEM SUBMITTED e.	TYPE OF SUBMITTAL: DATA f.	DRAWINGS g.	INSTRUCTIONS h.	SCHEDULES i.	STATEMENTS j.	REPORTS k.	CERTIFICATES l.	SAMPLES m.	RECORDS n.	O&M MANUALS o.	CLASSIFICATION: INFORMATION ONLY p.	GOVERNMENT APPROVED q.	REVIEWER r.	CONTRACTOR SCHEDULE DATES: SUBMIT s.	APPROVAL NEEDED BY t.	MATERIAL NEEDED BY u.	CONTRACTOR ACTION: CODE v.	DATE w.	SUBMIT TO GOVERN-MENT x.	GOVERNMENT ACTION: CODE y.	DATE z.	REMARKS aa.
			1.1	Initial Project Schedule				X								X	ED									
			1.1	Preliminary Project Schedule				X								X	ED									
			1.1	Periodic Schedule Updates				X								X	ED									
			1.2	Qualifications					X							X	ED									
			1.1	Narrative Report						X						X	AR									
			1.1	Schedule Reports						X						X	AR									

SUBMITTAL REGISTER
(ER 415 1-10)

CONTRACT NO.

TITLE AND LOCATION
Defense Security Service, Ft. Meade, MD

CONTRACTOR

SPECIFICATION SECTION
01451

ACTIVITY NO. a.	TRANS-MITTAL NO. b.	ITEM NO c.	SPECIFICATION PARAGRAPH NUMBER d.	DESCRIPTION OF ITEM SUBMITTED e.	TYPE OF SUBMITTAL: DATA f.	DRAWINGS g.	INSTRUCTIONS h.	SCHEDULES i.	STATEMENTS j.	REPORTS k.	CERTIFICATES l.	SAMPLES m.	RECORDS n.	O&M MANUALS o.	CLASSIFICATION: INFORMATION ONLY p.	GOVERNMENT APPROVED q.	REVIEWER r.	CONTRACTOR SCHEDULE DATES: SUBMIT s.	APPROVAL NEEDED BY t.	MATERIAL NEEDED BY u.	CONTRACTOR ACTION: CODE v.	DATE w.	SUBMIT TO GOVERN-MENT x.	GOVERNMENT ACTION: CODE y.	DATE z.	REMARKS aa.
			3.2	CQC Plan	X											X	AR									
			3.2	CQC Plan			X									X	AR									
			3.2	CQC Plan				X								X	AR									
			1.3	Change Notification					X						X		AR									
			1.3	Phase Notification					X						X		AR									
			3.8.1	Punchlist					X						X		AR									
			3.2	CQC Plan						X						X	AR									
			1.3	Request						X						X	AR									
			3.7.1	Tests						X					X		AR									
			3.7.1	Test Reports						X					X		AR									
			3.2	CQC Plan							X					X	AR									
			1.3	CQC Mgr Qualification							X					X	AR									
			1.3	CQC Mgr Qualification								X				X	AR									
			3.2	CQC Plan									X			X	AR									
			3.3	Minutes									X		X		AR									
			1.3	CQC Mgr Qualification									X		X		AR									
			3.7.1	Tests Performed									X		X		AR									
			1.3	QC Records									X			X	AR									

SUBMITTAL REGISTER
(ER 415 1-10)

CONTRACT NO.

TITLE AND LOCATION
Defense Security Service, Ft. Meade, MD

CONTRACTOR

SPECIFICATION SECTION
01561

ACTIVITY NO. a.	TRANS-MITTAL NO. b.	ITEM NO c.	SPECIFICATION PARAGRAPH NUMBER d.	DESCRIPTION OF ITEM SUBMITTED e.	TYPE OF SUBMITTAL: DATA f.	DRAWINGS g.	INSTRUCTIONS h.	SCHEDULES i.	STATEMENTS j.	REPORTS k.	CERTIFICATES l.	SAMPLES m.	RECORDS n.	O&M MANUALS o.	CLASSIFICATION: INFORMATION ONLY p.	GOVERNMENT APPROVED q.	REVIEWER r.	CONTRACTOR SCHEDULE DATES: SUBMIT s.	APPROVAL NEEDED BY t.	MATERIAL NEEDED BY u.	CONTRACTOR ACTION: CODE v.	DATE w.	SUBMIT TO GOVERN-MENT x.	GOVERNMENT ACTION: CODE y.	DATE z.	REMARKS aa.
			1.9.4	Facility Plan					X							X	AR									
			1.9.5	Temporary Plan					X							X	AR									

SUBMITTAL REGISTER
(ER 415 1-10)

CONTRACT NO.

TITLE AND LOCATION
Defense Security Service, Ft. Meade, MD

CONTRACTOR

SPECIFICATION SECTION
01720

ACTIVITY NO. a.	TRANS-MITTAL NO. b.	ITEM NO c.	SPECIFICATION PARAGRAPH NUMBER d.	DESCRIPTION OF ITEM SUBMITTED e.	TYPE OF SUBMITTAL: DATA f.	DRAWINGS g.	INSTRUCTIONS h.	SCHEDULES i.	STATEMENTS j.	REPORTS k.	CERTIFICATES l.	SAMPLES m.	RECORDS n.	O&M MANUALS o.	CLASSIFICATION: INFORMATION ONLY p.	GOVERNMENT APPROVED q.	REVIEWER r.	CONTRACTOR SCHEDULE DATES: SUBMIT s.	APPROVAL NEEDED BY t.	MATERIAL NEEDED BY u.	CONTRACTOR ACTION: CODE v.	DATE w.	SUBMIT TO GOVERN-MENT x.	GOVERNMENT ACTION: CODE y.	DATE z.	REMARKS aa.
			1.3	CADD Files	X										X		AR									
			1.3	Progress Prints		X										X	AR									
			1.3	Final Prints		X										X	AR									

SUBMITTAL REGISTER
(ER 415 1-10)

CONTRACT NO.

TITLE AND LOCATION
Defense Security Service, Ft. Meade, MD

CONTRACTOR

SPECIFICATION SECTION
02200

ACTIVITY NO. a.	TRANS-MITTAL NO. b.	ITEM NO c.	SPECIFICATION PARAGRAPH NUMBER d.	DESCRIPTION OF ITEM SUBMITTED e.	TYPE OF SUBMITTAL: DATA f.	DRAWINGS g.	INSTRUCTIONS h.	SCHEDULES i.	STATEMENTS j.	REPORTS k.	CERTIFICATES l.	SAMPLES m.	RECORDS n.	O&M MANUALS o.	CLASSIFICATION: INFORMATION ONLY p.	GOVERNMENT APPROVED q.	REVIEWER r.	CONTRACTOR SCHEDULE DATES: SUBMIT s.	APPROVAL NEEDED BY t.	MATERIAL NEEDED BY u.	CONTRACTOR ACTION: CODE v.	DATE w.	SUBMIT TO GOVERN-MENT x.	GOVERNMENT ACTION: CODE y.	DATE z.	REMARKS aa.
			1.3	Test Reports						X						X	AR									

SUBMITTAL REGISTER
(ER 415 1-10)

CONTRACT NO.

TITLE AND LOCATION
Defense Security Service, Ft. Meade, MD

CONTRACTOR

SPECIFICATION SECTION
02221

ACTIVITY NO. a.	TRANS-MITTAL NO. b.	ITEM NO c.	SPECIFICATION PARAGRAPH NUMBER d.	DESCRIPTION OF ITEM SUBMITTED e.	TYPE OF SUBMITTAL: DATA f.	DRAWINGS g.	INSTRUCTIONS h.	SCHEDULES i.	STATEMENTS j.	REPORTS k.	CERTIFICATES l.	SAMPLES m.	RECORDS n.	O&M MANUALS o.	CLASSIFICATION: INFORMATION ONLY p.	GOVERNMENT APPROVED q.	REVIEWER r.	CONTRACTOR SCHEDULE DATES: SUBMIT s.	APPROVAL NEEDED BY t.	MATERIAL NEEDED BY u.	CONTRACTOR ACTION: CODE v.	DATE w.	SUBMIT TO GOVERN-MENT x.	GOVERNMENT ACTION: CODE y.	DATE z.	REMARKS aa.
			1.3	Field Density Tests						X					X		AR									
			1.3	Testing of Backfill Materials						X					X		AR									

SUBMITTAL REGISTER
(ER 415 1-10)

CONTRACT NO.

TITLE AND LOCATION
Defense Security Service, Ft. Meade, MD

CONTRACTOR

SPECIFICATION SECTION
02300

ACTIVITY NO. a.	TRANS-MITTAL NO. b.	ITEM NO c.	SPECIFICATION PARAGRAPH NUMBER d.	DESCRIPTION OF ITEM SUBMITTED e.	TYPE OF SUBMITTAL: DATA f.	DRAWINGS g.	INSTRUCTIONS h.	SCHEDULES i.	STATEMENTS j.	REPORTS k.	CERTIFICATES l.	SAMPLES m.	RECORDS n.	O&M MANUALS o.	CLASSIFICATION: INFORMATION ONLY p.	GOVERNMENT APPROVED q.	REVIEWER r.	CONTRACTOR SCHEDULE DATES: SUBMIT s.	APPROVAL NEEDED BY t.	MATERIAL NEEDED BY u.	CONTRACTOR ACTION: CODE v.	DATE w.	SUBMIT TO GOVERN-MENT x.	GOVERNMENT ACTION: CODE y.	DATE z.	REMARKS aa.
			1.3	Earthwork					X						X		AR									
			3.10	Testing						X					X		AR									
			3.10	Testing							X				X		AR									
			1.3	Earthwork									X		X		AR									

SUBMITTAL REGISTER
(ER 415 1-10)

CONTRACT NO.

TITLE AND LOCATION
Defense Security Service, Ft. Meade, MD

CONTRACTOR

SPECIFICATION SECTION
02316

ACTIVITY NO. a.	TRANS-MITTAL NO. b.	ITEM NO c.	SPECIFICATION PARAGRAPH NUMBER d.	DESCRIPTION OF ITEM SUBMITTED e.	TYPE OF SUBMITTAL: DATA f.	DRAWINGS g.	INSTRUCTIONS h.	SCHEDULES i.	STATEMENTS j.	REPORTS k.	CERTIFICATES l.	SAMPLES m.	RECORDS n.	O&M MANUALS o.	CLASSIFICATION: INFORMATION ONLY p.	GOVERNMENT APPROVED q.	REVIEWER r.	CONTRACTOR SCHEDULE DATES: SUBMIT s.	APPROVAL NEEDED BY t.	MATERIAL NEEDED BY u.	CONTRACTOR ACTION: CODE v.	DATE w.	SUBMIT TO GOVERN-MENT x.	GOVERNMENT ACTION: CODE y.	DATE z.	REMARKS aa.
			1.3	Field Density Tests						X					X		AR									
			1.3	Testing of Backfill Materials						X					X		AR									
			1.3	Dewatering Plan						X						X	ED									
			1.3	Shoring and Bracing Plans						X						X	ED									

SUBMITTAL REGISTER
(ER 415 1-10)

CONTRACT NO.

TITLE AND LOCATION
Defense Security Service, Ft. Meade, MD

CONTRACTOR

SPECIFICATION SECTION
02580

ACTIVITY NO. a.	TRANS-MITTAL NO. b.	ITEM NO c.	SPECIFICATION PARAGRAPH NUMBER d.	DESCRIPTION OF ITEM SUBMITTED e.	TYPE OF SUBMITTAL: DATA f.	DRAWINGS g.	INSTRUCTIONS h.	SCHEDULES i.	STATEMENTS j.	REPORTS k.	CERTIFICATES l.	SAMPLES m.	RECORDS n.	O&M MANUALS o.	CLASSIFICATION: INFORMATION ONLY p.	GOVERNMENT APPROVED q.	REVIEWER r.	CONTRACTOR SCHEDULE DATES: SUBMIT s.	APPROVAL NEEDED BY t.	MATERIAL NEEDED BY u.	CONTRACTOR ACTION: CODE v.	DATE w.	SUBMIT TO GOVERN-MENT x.	GOVERNMENT ACTION: CODE y.	DATE z.	REMARKS aa.
			1.2	Equipment Lists	X											X	ED									
			1.2	Volatile Organic Compound (VOC)							X					X	ED									
				Content																						

SUBMITTAL REGISTER
(ER 415 1-10)

CONTRACT NO.

TITLE AND LOCATION
Defense Security Service, Ft. Meade, MD

CONTRACTOR

SPECIFICATION SECTION
02620

ACTIVITY NO. a.	TRANS-MITTAL NO. b.	ITEM NO c.	SPECIFICATION PARAGRAPH NUMBER d.	DESCRIPTION OF ITEM SUBMITTED e.	TYPE OF SUBMITTAL: DATA f.	DRAWINGS g.	INSTRUCTIONS h.	SCHEDULES i.	STATEMENTS j.	REPORTS k.	CERTIFICATES l.	SAMPLES m.	RECORDS n.	O&M MANUALS o.	CLASSIFICATION: INFORMATION ONLY p.	GOVERNMENT APPROVED q.	REVIEWER r.	CONTRACTOR SCHEDULE DATES: SUBMIT s.	APPROVAL NEEDED BY t.	MATERIAL NEEDED BY u.	CONTRACTOR ACTION: CODE v.	DATE w.	SUBMIT TO GOVERN-MENT x.	GOVERNMENT ACTION: CODE y.	DATE z.	REMARKS aa.
			1.2	Filtration Geotextile							X					X	ED									
			2.1	Pipe for Subdrains							X				X		AR									
			1.2	Filtration Geotextile								X				X	ED									
			2.1	Pipe for Subdrains								X			X		AR									

SUBMITTAL REGISTER
(ER 415 1-10)

CONTRACT NO.

TITLE AND LOCATION
Defense Security Service, Ft. Meade, MD

CONTRACTOR

SPECIFICATION SECTION
02660

ACTIVITY NO. a.	TRANS-MITTAL NO. b.	ITEM NO c.	SPECIFICATION PARAGRAPH NUMBER d.	DESCRIPTION OF ITEM SUBMITTED e.	TYPE OF SUBMITTAL: DATA f.	DRAWINGS g.	INSTRUCTIONS h.	SCHEDULES i.	STATEMENTS j.	REPORTS k.	CERTIFICATES l.	SAMPLES m.	RECORDS n.	O&M MANUALS o.	CLASSIFICATION: INFORMATION ONLY p.	GOVERNMENT APPROVED q.	REVIEWER r.	CONTRACTOR SCHEDULE DATES: SUBMIT s.	APPROVAL NEEDED BY t.	MATERIAL NEEDED BY u.	CONTRACTOR ACTION: CODE v.	DATE w.	SUBMIT TO GOVERN-MENT x.	GOVERNMENT ACTION: CODE y.	DATE z.	REMARKS aa.
			3.1	Installation			X								X		AR									
			1.4	Waste Water Disposal Method					X							X	ED									
			1.4	Satisfactory Installation					X						X		AR									
			3.3.1	Bacteriological Disinfection						X					X		AR									
			1.3	Manufacturer's Representative							X				X		AR									

SUBMITTAL REGISTER
(ER 415 1-10)

CONTRACT NO.

TITLE AND LOCATION
Defense Security Service, Ft. Meade, MD

CONTRACTOR

SPECIFICATION SECTION
02685

ACTIVITY NO. a.	TRANS-MITTAL NO. b.	ITEM NO. c.	SPECIFICATION PARAGRAPH NUMBER d.	DESCRIPTION OF ITEM SUBMITTED e.	TYPE OF SUBMITTAL: DATA f.	DRAWINGS g.	INSTRUCTIONS h.	SCHEDULES i.	STATEMENTS j.	REPORTS k.	CERTIFICATES l.	SAMPLES m.	RECORDS n.	O&M MANUALS o.	CLASSIFICATION: INFORMATION ONLY p.	GOVERNMENT APPROVED q.	REVIEWER r.	CONTRACTOR SCHEDULE DATES: SUBMIT s.	APPROVAL NEEDED BY t.	MATERIAL NEEDED BY u.	CONTRACTOR ACTION: CODE v.	DATE w.	SUBMIT TO GOVERN-MENT x.	GOVERNMENT ACTION: CODE y.	DATE z.	REMARKS aa.
			2.1	Pipe, Fittings, and Associated		X										X	ED									
				Materials																						
			1.3	Equipment and Materials				X								X	ED									
			1.3	Spare Parts Data				X							X		AR									
			1.3	Notification				X							X		AR									
			1.2.1	Welding Steel Piping					X						X		AR									
			1.3	Connection and Abandonment					X							X	ED									
				Procedures																						
			1.3	Utility Work							X				X		AR									
			1.3	Training							X				X		AR									
			1.3	Gas Distribution System										X	X		AR									

SUBMITTAL REGISTER
(ER 415 1-10)

CONTRACT NO.

TITLE AND LOCATION
Defense Security Service, Ft. Meade, MD

CONTRACTOR

SPECIFICATION SECTION
02714

ACTIVITY NO a.	TRANS-MITTAL NO. b.	ITEM NO c.	SPECIFICATION PARAGRAPH NUMBER d.	DESCRIPTION OF ITEM SUBMITTED e.	TYPE OF SUBMITTAL: DATA f.	DRAWINGS g.	INSTRUCTIONS h.	SCHEDULES i.	STATEMENTS j.	REPORTS k.	CERTIFICATES l.	SAMPLES m.	RECORDS n.	O&M MANUALS o.	CLASSIFICATION: INFORMATION ONLY p.	GOVERNMENT APPROVED q.	REVIEWER r.	CONTRACTOR SCHEDULE DATES: SUBMIT s.	APPROVAL NEEDED BY t.	MATERIAL NEEDED BY u.	CONTRACTOR ACTION: CODE v.	DATE w.	SUBMIT TO GOVERN-MENT x.	GOVERNMENT ACTION: CODE y.	DATE z.	REMARKS aa.
			1.3	Plant, Equipment, Machines, and	X										X		AR									
				Tools																						
			1.7	Sampling and Testing						X					X		AR									
			1.7.6	Approval of Materials						X						X	ED									
			3.2.7	Evaluation						X						X	ED									

SUBMITTAL REGISTER
(ER 415 1-10)

CONTRACT NO.

TITLE AND LOCATION
Defense Security Service, Ft. Meade, MD

CONTRACTOR

SPECIFICATION SECTION
02720

ACTIVITY NO. a.	TRANS-MITTAL NO. b.	ITEM NO c.	SPECIFICATION PARAGRAPH NUMBER d.	DESCRIPTION OF ITEM SUBMITTED e.	TYPE OF SUBMITTAL: DATA f.	DRAWINGS g.	INSTRUCTIONS h.	SCHEDULES i.	STATEMENTS j.	REPORTS k.	CERTIFICATES l.	SAMPLES m.	RECORDS n.	O&M MANUALS o.	CLASSIFICATION: INFORMATION ONLY p.	GOVERNMENT APPROVED q.	REVIEWER r.	CONTRACTOR SCHEDULE DATES: SUBMIT s.	APPROVAL NEEDED BY t.	MATERIAL NEEDED BY u.	CONTRACTOR ACTION: CODE v.	DATE w.	SUBMIT TO GOVERN-MENT x.	GOVERNMENT ACTION: CODE y.	DATE z.	REMARKS aa.
			3.3	Placing Pipe			X									X	ED									
			1.2	Pipe Material							X					X	ED									
			1.2	Watertight Joints							X					X	ED[									
			1.2	Watertight Joints for Roof Drain Field							X					X	ED									
				Connection																						
			2.3.5	Frame and Cover for Gratings							X					X	ED									

SUBMITTAL REGISTER
(ER 415 1-10)

CONTRACT NO.

TITLE AND LOCATION
Defense Security Service, Ft. Meade, MD

CONTRACTOR

SPECIFICATION SECTION
02722

ACTIVITY NO. a.	TRANS-MITTAL NO. b.	ITEM NO c.	SPECIFICATION PARAGRAPH NUMBER d.	DESCRIPTION OF ITEM SUBMITTED e.	TYPE OF SUBMITTAL: DATA f.	DRAWINGS g.	INSTRUCTIONS h.	SCHEDULES i.	STATEMENTS j.	REPORTS k.	CERTIFICATES l.	SAMPLES m.	RECORDS n.	O&M MANUALS o.	CLASSIFICATION: INFORMATION ONLY p.	GOVERNMENT APPROVED q.	REVIEWER r.	CONTRACTOR SCHEDULE DATES: SUBMIT s.	APPROVAL NEEDED BY t.	MATERIAL NEEDED BY u.	CONTRACTOR ACTION: CODE v.	DATE w.	SUBMIT TO GOVERN-MENT x.	GOVERNMENT ACTION: CODE y.	DATE z.	REMARKS aa.
			1.6	Plant, Equipment, Machines, and	X											X	ED									
				Tools																						
			1.8	Sampling and Testing						X					X		AR										
			3.5.1	Field Density						X					X		AR										
			2.1.1.1	Coarse Aggregate									X			X	ED									

SUBMITTAL REGISTER
(ER 415 1-10)

CONTRACT NO.

TITLE AND LOCATION
Defense Security Service, Ft. Meade, MD

CONTRACTOR

SPECIFICATION SECTION
02730

ACTIVITY NO. a.	TRANS-MITTAL NO. b.	ITEM NO c.	SPECIFICATION PARAGRAPH NUMBER d.	DESCRIPTION OF ITEM SUBMITTED e.	TYPE OF SUBMITTAL: DATA f.	DRAWINGS g.	INSTRUCTIONS h.	SCHEDULES i.	STATEMENTS j.	REPORTS k.	CERTIFICATES l.	SAMPLES m.	RECORDS n.	O&M MANUALS o.	CLASSIFICATION: INFORMATION ONLY p.	GOVERNMENT APPROVED q.	REVIEWER r.	CONTRACTOR SCHEDULE DATES: SUBMIT s.	APPROVAL NEEDED BY t.	MATERIAL NEEDED BY u.	CONTRACTOR ACTION: CODE v.	DATE w.	SUBMIT TO GOVERN-MENT x.	GOVERNMENT ACTION: CODE y.	DATE z.	REMARKS aa.
			1.3	Portland Cement							X				X		AR									

SUBMITTAL REGISTER
(ER 415 1-10)

CONTRACT NO.

TITLE AND LOCATION
Defense Security Service, Ft. Meade, MD

CONTRACTOR

SPECIFICATION SECTION
02770

ACTIVITY NO. a.	TRANS-MITTAL NO. b.	ITEM NO c.	SPECIFICATION PARAGRAPH NUMBER d.	DESCRIPTION OF ITEM SUBMITTED e.	TYPE OF SUBMITTAL: DATA f.	DRAWINGS g.	INSTRUCTIONS h.	SCHEDULES i.	STATEMENTS j.	REPORTS k.	CERTIFICATES l.	SAMPLES m.	RECORDS n.	O&M MANUALS o.	CLASSIFICATION: INFORMATION ONLY p.	GOVERNMENT APPROVED q.	REVIEWER r.	CONTRACTOR SCHEDULE DATES: SUBMIT s.	APPROVAL NEEDED BY t.	MATERIAL NEEDED BY u.	CONTRACTOR ACTION: CODE v.	DATE w.	SUBMIT TO GOVERN-MENT x.	GOVERNMENT ACTION: CODE y.	DATE z.	REMARKS aa.
			1.2	Mixture Proportions					X							X	ED									
			3.8	Field Quality Control						X					X		AR									
			1.2	Surface Retarder								X				X	ED									
			2.1	Concrete									X		X		AR									

SUBMITTAL REGISTER
(ER 415 1-10)

CONTRACT NO.

TITLE AND LOCATION
Defense Security Service, Ft. Meade, MD

CONTRACTOR

SPECIFICATION SECTION
02935

ACTIVITY NO. a.	TRANS-MITTAL NO. b.	ITEM NO c.	SPECIFICATION PARAGRAPH NUMBER d.	DESCRIPTION OF ITEM SUBMITTED e.	TYPE OF SUBMITTAL: DATA f.	DRAWINGS g.	INSTRUCTIONS h.	SCHEDULES i.	STATEMENTS j.	REPORTS k.	CERTIFICATES l.	SAMPLES m.	RECORDS n.	O&M MANUALS o.	CLASSIFICATION: INFORMATION ONLY p.	GOVERNMENT APPROVED q.	REVIEWER r.	CONTRACTOR SCHEDULE DATES: SUBMIT s.	APPROVAL NEEDED BY t.	MATERIAL NEEDED BY u.	CONTRACTOR ACTION: CODE v.	DATE w.	SUBMIT TO GOVERN-MENT x.	GOVERNMENT ACTION: CODE y.	DATE z.	REMARKS aa.
			1.2	Manufacturer's Literature	X										X		AR									
			1.2	Equipment List				X							X		AR									
			1.4.1	Delivery					X							X	ED									
			3.8.3.5	Maintenance Report					X						X		AR									
			3.8	Turf Establishment Period					X						X		AR									
			1.2	Seed							X					X	GA									
			1.2	Fertilizer							X					X	ED									
			1.2	Delivered Topsoil							X					X	ED									

SUBMITTAL REGISTER
(ER 415 1-10)

CONTRACT NO.

TITLE AND LOCATION
Defense Security Service, Ft. Meade, MD

CONTRACTOR

SPECIFICATION SECTION
02950

ACTIVITY NO. a.	TRANS-MITTAL NO. b.	ITEM NO c.	SPECIFICATION PARAGRAPH NUMBER d.	DESCRIPTION OF ITEM SUBMITTED e.	TYPE OF SUBMITTAL: DATA f.	DRAWINGS g.	INSTRUCTIONS h.	SCHEDULES i.	STATEMENTS j.	REPORTS k.	CERTIFICATES l.	SAMPLES m.	RECORDS n.	O&M MANUALS o.	CLASSIFICATION: INFORMATION ONLY p.	GOVERNMENT APPROVED q.	REVIEWER r.	CONTRACTOR SCHEDULE DATES: SUBMIT s.	APPROVAL NEEDED BY t.	MATERIAL NEEDED BY u.	CONTRACTOR ACTION: CODE v.	DATE w.	SUBMIT TO GOVERN-MENT x.	GOVERNMENT ACTION: CODE y.	DATE z.	REMARKS aa.
			2.6	Edging Material	X										X		AR									
			2.8	Erosion Control Material	X										X		AR									
			1.4.2	Delivery					X							X	AR									
			1.2	Soil Test for Delivered Topsoil						X						X	ED									
			3.4	Percolation Test						X						X	ED									
			2.2	Topsoil							X					X	ED									
			2.3	Soil Amendments							X					X	ED									
			2.1	Plants							X					X	ED									
			3.11	Plant Establishment Period									X		X		AR									
			3.11.2.7	Maintenance Report									X		X		AR									
			3.11.2.8	Maintenance Instructions									X			X	ED									

SUBMITTAL REGISTER
(ER 415 1-10)

CONTRACT NO.

TITLE AND LOCATION
Defense Security Service, Ft. Meade, MD

CONTRACTOR

SPECIFICATION SECTION
03100

ACTIVITY NO. a.	TRANS-MITTAL NO. b.	ITEM NO c.	SPECIFICATION PARAGRAPH NUMBER d.	DESCRIPTION OF ITEM SUBMITTED e.	TYPE OF SUBMITTAL: DATA f.	DRAWINGS g.	INSTRUCTIONS h.	SCHEDULES i.	STATEMENTS j.	REPORTS k.	CERTIFICATES l.	SAMPLES m.	RECORDS n.	O&M MANUALS o.	CLASSIFICATION: INFORMATION ONLY p.	GOVERNMENT APPROVED q.	REVIEWER r.	CONTRACTOR SCHEDULE DATES: SUBMIT s.	APPROVAL NEEDED BY t.	MATERIAL NEEDED BY u.	CONTRACTOR ACTION: CODE v.	DATE w.	SUBMIT TO GOVERN-MENT x.	GOVERNMENT ACTION: CODE y.	DATE z.	REMARKS aa.
			2.1.4	Form Releasing Agents			X								X		AR									

SUBMITTAL REGISTER
(ER 415 1-10)

CONTRACT NO.

TITLE AND LOCATION
Defense Security Service, Ft. Meade, MD

CONTRACTOR

SPECIFICATION SECTION
03200

ACTIVITY NO. a.	TRANS-MITTAL NO. b.	ITEM NO c.	SPECIFICATION PARAGRAPH NUMBER d.	DESCRIPTION OF ITEM SUBMITTED e.	TYPE OF SUBMITTAL: DATA f.	DRAWINGS g.	INSTRUCTIONS h.	SCHEDULES i.	STATEMENTS j.	REPORTS k.	CERTIFICATES l.	SAMPLES m.	RECORDS n.	O&M MANUALS o.	CLASSIFICATION: INFORMATION ONLY p.	GOVERNMENT APPROVED q.	REVIEWER r.	CONTRACTOR SCHEDULE DATES: SUBMIT s.	APPROVAL NEEDED BY t.	MATERIAL NEEDED BY u.	CONTRACTOR ACTION: CODE v.	DATE w.	SUBMIT TO GOVERN-MENT x.	GOVERNMENT ACTION: CODE y.	DATE z.	REMARKS aa.
			1.2	Concrete Reinforcement System		X									X											
			2.2	Reinforcing Steel							X				X		AR									

SUBMITTAL REGISTER
(ER 415 1-10)

CONTRACT NO.

TITLE AND LOCATION
Defense Security Service, Ft. Meade, MD

CONTRACTOR

SPECIFICATION SECTION
03250

ACTIVITY NO. a.	TRANS-MITTAL NO. b.	ITEM NO. c.	SPECIFICATION PARAGRAPH NUMBER d.	DESCRIPTION OF ITEM SUBMITTED e.	TYPE OF SUBMITTAL: DATA f.	DRAWINGS g.	INSTRUCTIONS h.	SCHEDULES i.	STATEMENTS j.	REPORTS k.	CERTIFICATES l.	SAMPLES m.	RECORDS n.	O&M MANUALS o.	CLASSIFICATION: INFORMATION ONLY p.	GOVERNMENT APPROVED q.	REVIEWER r.	CONTRACTOR SCHEDULE DATES: SUBMIT s.	APPROVAL NEEDED BY t.	MATERIAL NEEDED BY u.	CONTRACTOR ACTION: CODE v.	DATE w.	SUBMIT TO GOVERN-MENT x.	GOVERNMENT ACTION: CODE y.	DATE z.	REMARKS aa.
			2.2	Preformed Expansion Joint Filler	X										X		AR									
			2.3	Sealant	X										X		AR									
			2.2	Preformed Expansion Joint Filler			X								X		AR									
			2.3	Sealant			X								X		AR									
			2.2	Preformed Expansion Joint Filler							X				X		AR									
			2.3	Sealant							X				X		AR									

SUBMITTAL REGISTER
(ER 415 1-10)

CONTRACT NO.

TITLE AND LOCATION
Defense Security Service, Ft. Meade, MD

CONTRACTOR

SPECIFICATION SECTION
03300

ACTIVITY NO. a.	TRANS-MITTAL NO. b.	ITEM NO c.	SPECIFICATION PARAGRAPH NUMBER d.	DESCRIPTION OF ITEM SUBMITTED e.	TYPE OF SUBMITTAL: DATA f.	DRAWINGS g.	INSTRUCTIONS h.	SCHEDULES i.	STATEMENTS j.	REPORTS k.	CERTIFICATES l.	SAMPLES m.	RECORDS n.	O&M MANUALS o.	CLASSIFICATION: INFORMATION ONLY p.	GOVERNMENT APPROVED q.	REVIEWER r.	CONTRACTOR SCHEDULE DATES: SUBMIT s.	APPROVAL NEEDED BY t.	MATERIAL NEEDED BY u.	CONTRACTOR ACTION: CODE v.	DATE w.	SUBMIT TO GOVERN-MENT x.	GOVERNMENT ACTION: CODE y.	DATE z.	REMARKS aa.
			1.7	Mixture Proportions					X							X										
			3.14	Testing and Inspection for Contractor						X						X										
				Quality Control																						
			1.4	Qualifications							X				X		AR									
			2.3.5	Surface Retarder								X				X	AR									

SUBMITTAL REGISTER
(ER 415 1-10)

CONTRACT NO.

TITLE AND LOCATION
Defense Security Service, Ft. Meade, MD

CONTRACTOR

SPECIFICATION SECTION
03450

ACTIVITY NO. a.	TRANS-MITTAL NO. b.	ITEM NO c.	SPECIFICATION PARAGRAPH NUMBER d.	DESCRIPTION OF ITEM SUBMITTED e.	TYPE OF SUBMITTAL: DATA f.	DRAWINGS g.	INSTRUCTIONS h.	SCHEDULES i.	STATEMENTS j.	REPORTS k.	CERTIFICATES l.	SAMPLES m.	RECORDS n.	O&M MANUALS o.	CLASSIFICATION: INFORMATION ONLY p.	GOVERNMENT APPROVED q.	REVIEWER r.	CONTRACTOR SCHEDULE DATES: SUBMIT s.	APPROVAL NEEDED BY t.	MATERIAL NEEDED BY u.	CONTRACTOR ACTION: CODE v.	DATE w.	SUBMIT TO GOVERN-MENT x.	GOVERNMENT ACTION: CODE y.	DATE z.	REMARKS aa.
			1.3.5	Calculations	X											X	ED									
			1.4	Mix Design	X										X		AR									
			1.4	Architectural Concrete System		X										X	ED									
			2.1	Materials						X					X		AR									
			2.2	Precast Concrete Units								X				X	ED									
			1.4	Manufacturer's Qualifications									X		X		AR									

SUBMITTAL REGISTER
(ER 415 1-10)

CONTRACT NO.

TITLE AND LOCATION
Defense Security Service, Ft. Meade, MD

CONTRACTOR

SPECIFICATION SECTION
04200

ACTIVITY NO. a.	TRANS-MITTAL NO. b.	ITEM NO c.	SPECIFICATION PARAGRAPH NUMBER d.	DESCRIPTION OF ITEM SUBMITTED e.	TYPE OF SUBMITTAL: DATA f.	DRAWINGS g.	INSTRUCTIONS h.	SCHEDULES i.	STATEMENTS j.	REPORTS k.	CERTIFICATES l.	SAMPLES m.	RECORDS n.	O&M MANUALS o.	CLASSIFICATION: INFORMATION ONLY p.	GOVERNMENT APPROVED q.	REVIEWER r.	CONTRACTOR SCHEDULE DATES: SUBMIT s.	APPROVAL NEEDED BY t.	MATERIAL NEEDED BY u.	CONTRACTOR ACTION: CODE v.	DATE w.	SUBMIT TO GOVERN-MENT x.	GOVERNMENT ACTION: CODE y.	DATE z.	REMARKS aa.
			2.2	Clay or Shale Brick	X											X	ED									
			2.3	Concrete Brick	X											X	ED									
			1.2	Prefaced Concrete Masonry Units	X											X	ED									
			2.14	Insulation	X											X	ED									
			1.2	Masonry Work		X										X	ED									
			3.1.2	Cold Weather Installation					X							X	ED									
			3.22.3	Efflorescence Test						X					X		AR									
			3.22.1	Field Testing of Mortar						X					X		AR									
			3.22.2	Field Testing of Grout						X					X		AR									
			1.2	Prism tests						X					X		AR									
			1.2	Masonry Cement						X					X		AR									
			1.2	Fire-rated CMU						X					X		AR									
			1.2	Special Inspection						X						X	ED									
			2.2	Clay or Shale Brick							X															
			1.2	FI0							X															
			1.2	AR							X															
			2.3	Concrete Brick							X				X		AR									
			2.4	Concrete Masonry Units (CMU)							X				X		AR									
			1.2	Prefaced Concrete Masonry Units							X				X		AR									
			2.12	Control Joint Keys							X				X		AR									
			2.9	Anchors, Ties, and Bar Positioners							X				X		AR									
			2.13	Expansion-Joint Materials							X				X		AR									
			2.10	Joint Reinforcement							X				X		AR									
			2.11	Reinforcing Steel Bars and Rods							X				X		AR									
			1.2	Masonry Cement							X				X		AR									
			1.2	Mortar Coloring							X				X		AR									
			2.14	Insulation							X				X		GA									
			2.14	Insulation							X				X		GA									
			2.5	Precast Concrete Items							X				X		AR									

SUBMITTAL REGISTER
(ER 415 1-10)

CONTRACT NO.

TITLE AND LOCATION
Defense Security Service, Ft. Meade, MD

CONTRACTOR

SPECIFICATION SECTION
04200

ACTIVITY NO. a.	TRANS-MITTAL NO. b.	ITEM NO. c.	SPECIFICATION PARAGRAPH NUMBER d.	DESCRIPTION OF ITEM SUBMITTED e.	TYPE OF SUBMITTAL: DATA f.	DRAWINGS g.	INSTRUCTIONS h.	SCHEDULES i.	STATEMENTS j.	REPORTS k.	CERTIFICATES l.	SAMPLES m.	RECORDS n.	O&M MANUALS o.	CLASSIFICATION: INFORMATION ONLY p.	GOVERNMENT APPROVED q.	REVIEWER r.	CONTRACTOR SCHEDULE DATES: SUBMIT s.	APPROVAL NEEDED BY t.	MATERIAL NEEDED BY u.	CONTRACTOR ACTION: CODE v.	DATE w.	SUBMIT TO GOVERN-MENT x.	GOVERNMENT ACTION: CODE y.	DATE z.	REMARKS aa.
			1.2	Mortar Admixtures							X				X		AR									
			1.2	Grout Admixtures							X				X		AR									
			1.2	Ceramic Glazed Structural Clay							X				X		AR									
				Facing Units																						
			2.4	Concrete Masonry Units (CMU)								X				X	ED									
			2.3	Concrete Brick								X				X	ED									
			1.2	Cast Stone Items								X				X	ED									
			2.2	Clay or Shale Brick								X				X	ED									
			2.9	Anchors, Ties, and Bar Positioners								X			X		AR									
			1.2	Expansion-Joint Material								X			X		AR									
			2.10	Joint Reinforcement								X			X		AR									
			2.14	Insulation								X			X		AR									
			1.2	Portable Panel								X				X	ED									

SUBMITTAL REGISTER
(ER 415 1-10)

CONTRACT NO.

TITLE AND LOCATION
Defense Security Service, Ft. Meade, MD

CONTRACTOR

SPECIFICATION SECTION
04460

ACTIVITY NO. a.	TRANS-MITTAL NO. b.	ITEM NO c.	SPECIFICATION PARAGRAPH NUMBER d.	DESCRIPTION OF ITEM SUBMITTED e.	TYPE OF SUBMITTAL: DATA f.	DRAWINGS g.	INSTRUCTIONS h.	SCHEDULES i.	STATEMENTS j.	REPORTS k.	CERTIFICATES l.	SAMPLES m.	RECORDS n.	O&M MANUALS o.	CLASSIFICATION: INFORMATION ONLY p.	GOVERNMENT APPROVED q.	REVIEWER r.	CONTRACTOR SCHEDULE DATES: SUBMIT s.	APPROVAL NEEDED BY t.	MATERIAL NEEDED BY u.	CONTRACTOR ACTION: CODE v.	DATE w.	SUBMIT TO GOVERN-MENT x.	GOVERNMENT ACTION: CODE y.	DATE z.	REMARKS aa.
			1.2	Design Analysis	X											X	ED									
			1.2	Stone Cladding Support System	X											X	ED									
			1.3	Stone Cladding		X										X	ED									
			1.4	Stone Cladding		X										X	ED									
			1.5	Stone Cladding		X										X	ED									
			3.6	Granite Fieldstone		X										X	ED									
			1.2	Testing						X					X		AR									
			1.3	Stone Cladding							X				X		AR									
			1.4	Stone Cladding							X				X		AR									
			1.5	Stone Cladding							X				X		AR									
			3.6	Granite Fieldstone							X				X		AR									
			1.3	Stone Cladding								X				X	ED									
			1.4	Stone Cladding								X				X	ED									
			1.5	Stone Cladding								X				X	ED									
			3.6	Granite Fieldstone								X				X	ED									

SUBMITTAL REGISTER
(ER 415 1-10)

CONTRACT NO.

TITLE AND LOCATION
Defense Security Service, Ft. Meade, MD

CONTRACTOR

SPECIFICATION SECTION
05055

ACTIVITY NO a.	TRANS-MITTAL NO. b.	ITEM NO c.	SPECIFICATION PARAGRAPH NUMBER d.	DESCRIPTION OF ITEM SUBMITTED e.	TYPE OF SUBMITTAL: DATA f.	DRAWINGS g.	INSTRUCTIONS h.	SCHEDULES i.	STATEMENTS j.	REPORTS k.	CERTIFICATES l.	SAMPLES m.	RECORDS n.	O&M MANUALS o.	CLASSIFICATION: INFORMATION ONLY p.	GOVERNMENT APPROVED q.	REVIEWER r.	CONTRACTOR SCHEDULE DATES: SUBMIT s.	APPROVAL NEEDED BY t.	MATERIAL NEEDED BY u.	CONTRACTOR ACTION: CODE v.	DATE w.	SUBMIT TO GOVERN-MENT x.	GOVERNMENT ACTION: CODE y.	DATE z.	REMARKS aa.
			1.5	Welding Procedure Qualifications					X							X	ED									
			1.6	Welder, Welding Operator, and					X							X	ED									
				Tacker Qualification																						
			1.7	Inspector Qualification					X							X	ED									
			3.2	Quality Control									X		X		AR									

SUBMITTAL REGISTER
(ER 415 1-10)

CONTRACT NO.

TITLE AND LOCATION
Defense Security Service, Ft. Meade, MD

CONTRACTOR

SPECIFICATION SECTION
05061

ACTIVITY NO. a.	TRANS-MITTAL NO. b.	ITEM NO c.	SPECIFICATION PARAGRAPH NUMBER d.	DESCRIPTION OF ITEM SUBMITTED e.	TYPE OF SUBMITTAL: DATA f.	DRAWINGS g.	INSTRUCTIONS h.	SCHEDULES i.	STATEMENTS j.	REPORTS k.	CERTIFICATES l.	SAMPLES m.	RECORDS n.	O&M MANUALS o.	CLASSIFICATION: INFORMATION ONLY p.	GOVERNMENT APPROVED q.	REVIEWER r.	CONTRACTOR SCHEDULE DATES: SUBMIT s.	APPROVAL NEEDED BY t.	MATERIAL NEEDED BY u.	CONTRACTOR ACTION: CODE v.	DATE w.	SUBMIT TO GOVERN-MENT x.	GOVERNMENT ACTION: CODE y.	DATE z.	REMARKS aa.
			1.4	Ultrasonic Inspection					X						X		AR									
			1.4	Ultrasonic Inspection									X		X		AR									

SUBMITTAL REGISTER
(ER 415 1-10)

CONTRACT NO.

TITLE AND LOCATION
Defense Security Service, Ft. Meade, MD

CONTRACTOR

SPECIFICATION SECTION
05120

ACTIVITY NO. a.	TRANS-MITTAL NO. b.	ITEM NO c.	SPECIFICATION PARAGRAPH NUMBER d.	DESCRIPTION OF ITEM SUBMITTED e.	TYPE OF SUBMITTAL: DATA f.	DRAWINGS g.	INSTRUCTIONS h.	SCHEDULES i.	STATEMENTS j.	REPORTS k.	CERTIFICATES l.	SAMPLES m.	RECORDS n.	O&M MANUALS o.	CLASSIFICATION: INFORMATION ONLY p.	GOVERNMENT APPROVED q.	REVIEWER r.	CONTRACTOR SCHEDULE DATES: SUBMIT s.	APPROVAL NEEDED BY t.	MATERIAL NEEDED BY u.	CONTRACTOR ACTION: CODE v.	DATE w.	SUBMIT TO GOVERN-MENT x.	GOVERNMENT ACTION: CODE y.	DATE z.	REMARKS aa.
			1.3	Structural Steel System		X										X	ED									
			3.2.1	Structural Connections		X										X	ED									
			3.2	Erection					X						X		AR									
			1.3	Mill Test Reports							X				X		AR									
			1.3	Welder Qualifications							X				X		AR									
			3.1	Fabrication							X					X	ED									
			2.2	High Strength Bolts and Nuts								X			X		AR									
			2.3	Carbon Steel Bolts and Nuts								X			X		AR									
			2.4	Nuts Dimensional Style								X			X		AR									
			2.5	Washers								X			X		AR									

SUBMITTAL REGISTER
(ER 415 1-10)

CONTRACT NO.

TITLE AND LOCATION
Defense Security Service, Ft. Meade, MD

CONTRACTOR

SPECIFICATION SECTION
05210

ACTIVITY NO. a.	TRANS-MITTAL NO. b.	ITEM NO c.	SPECIFICATION PARAGRAPH NUMBER d.	DESCRIPTION OF ITEM SUBMITTED e.	TYPE OF SUBMITTAL: DATA f.	DRAWINGS g.	INSTRUCTIONS h.	SCHEDULES i.	STATEMENTS j.	REPORTS k.	CERTIFICATES l.	SAMPLES m.	RECORDS n.	O&M MANUALS o.	CLASSIFICATION: INFORMATION ONLY p.	GOVERNMENT APPROVED q.	REVIEWER r.	CONTRACTOR SCHEDULE DATES: SUBMIT s.	APPROVAL NEEDED BY t.	MATERIAL NEEDED BY u.	CONTRACTOR ACTION: CODE v.	DATE w.	SUBMIT TO GOVERN-MENT x.	GOVERNMENT ACTION: CODE y.	DATE z.	REMARKS aa.
			1.2	Steel Joists		X										X	ED									
			1.2	Steel Joists							X				X		AR									

SUBMITTAL REGISTER
(ER 415 1-10)

CONTRACT NO.

TITLE AND LOCATION
Defense Security Service, Ft. Meade, MD

CONTRACTOR

SPECIFICATION SECTION
05300

ACTIVITY NO. a.	TRANS-MITTAL NO. b.	ITEM NO c.	SPECIFICATION PARAGRAPH NUMBER d.	DESCRIPTION OF ITEM SUBMITTED e.	TYPE OF SUBMITTAL: DATA f.	DRAWINGS g.	INSTRUCTIONS h.	SCHEDULES i.	STATEMENTS j.	REPORTS k.	CERTIFICATES l.	SAMPLES m.	RECORDS n.	O&M MANUALS o.	CLASSIFICATION: INFORMATION ONLY p.	GOVERNMENT APPROVED q.	REVIEWER r.	CONTRACTOR SCHEDULE DATES: SUBMIT s.	APPROVAL NEEDED BY t.	MATERIAL NEEDED BY u.	CONTRACTOR ACTION: CODE v.	DATE w.	SUBMIT TO GOVERN-MENT x.	GOVERNMENT ACTION: CODE y.	DATE z.	REMARKS aa.
			2.1	Deck Units	X											X	ED									
			2.1	Deck Units		X										X	ED									
			2.5	Accessories		X										X	ED									
			3.2	Attachments		X										X	ED									
			3.3	Holes and Openings		X										X	ED									
			2.1	Deck Units							X				X		AR									
			3.2	Attachments							X				X		AR									
			2.1	Deck Units								X			X		AR									
			2.5	Accessories								X			X		AR									
			3.2	Attachments									X		X		AR									

SUBMITTAL REGISTER
(ER 415 1-10)

CONTRACT NO.

TITLE AND LOCATION
Defense Security Service, Ft. Meade, MD

CONTRACTOR

SPECIFICATION SECTION
05500

ACTIVITY NO. a.	TRANS-MITTAL NO. b.	ITEM NO c.	SPECIFICATION PARAGRAPH NUMBER d.	DESCRIPTION OF ITEM SUBMITTED e.	TYPE OF SUBMITTAL: DATA f.	DRAWINGS g.	INSTRUCTIONS h.	SCHEDULES i.	STATEMENTS j.	REPORTS k.	CERTIFICATES l.	SAMPLES m.	RECORDS n.	O&M MANUALS o.	CLASSIFICATION: INFORMATION ONLY p.	GOVERNMENT APPROVED q.	REVIEWER r.	CONTRACTOR SCHEDULE DATES: SUBMIT s.	APPROVAL NEEDED BY t.	MATERIAL NEEDED BY u.	CONTRACTOR ACTION: CODE v.	DATE w.	SUBMIT TO GOVERN-MENT x.	GOVERNMENT ACTION: CODE y.	DATE z.	REMARKS aa.
			1.2	Miscellaneous Metal Items		X										X	ED									
			1.2	Miscellaneous Metal Items								X			X		AR									

SUBMITTAL REGISTER
(ER 415 1-10)

CONTRACT NO.

TITLE AND LOCATION
Defense Security Service, Ft. Meade, MD

CONTRACTOR

SPECIFICATION SECTION
06100

ACTIVITY NO. a.	TRANS-MITTAL NO. b.	ITEM NO. c.	SPECIFICATION PARAGRAPH NUMBER d.	DESCRIPTION OF ITEM SUBMITTED e.	TYPE OF SUBMITTAL: DATA f.	DRAWINGS g.	INSTRUCTIONS h.	SCHEDULES i.	STATEMENTS j.	REPORTS k.	CERTIFICATES l.	SAMPLES m.	RECORDS n.	O&M MANUALS o.	CLASSIFICATION: INFORMATION ONLY p.	GOVERNMENT APPROVED q.	REVIEWER r.	CONTRACTOR SCHEDULE DATES: SUBMIT s.	APPROVAL NEEDED BY t.	MATERIAL NEEDED BY u.	CONTRACTOR ACTION: CODE v.	DATE w.	SUBMIT TO GOVERN-MENT x.	GOVERNMENT ACTION: CODE y.	DATE z.	REMARKS aa.
			1.2	Structural Wood Members	X										X		AR									
			1.2	Product Installations	X										X		AR									
			1.2	Structural Wood Members		X									X		AR									
			3.1	Installation of Framing		X									X		AR									
			3.3.3	Nailers and Nailing Strips		X									X		AR									
			2.1.1	Grading and Marking							X				X		AR									
			2.3	Insulation							X					X	ED									

SUBMITTAL REGISTER
(ER 415 1-10)

CONTRACT NO.

TITLE AND LOCATION
Defense Security Service, Ft. Meade, MD

CONTRACTOR

SPECIFICATION SECTION
06200

ACTIVITY NO. a.	TRANS-MITTAL NO. b.	ITEM NO. c.	SPECIFICATION PARAGRAPH NUMBER d.	DESCRIPTION OF ITEM SUBMITTED e.	TYPE OF SUBMITTAL: DATA f.	DRAWINGS g.	INSTRUCTIONS h.	SCHEDULES i.	STATEMENTS j.	REPORTS k.	CERTIFICATES l.	SAMPLES m.	RECORDS n.	O&M MANUALS o.	CLASSIFICATION: INFORMATION ONLY p.	GOVERNMENT APPROVED q.	REVIEWER r.	CONTRACTOR SCHEDULE DATES: SUBMIT s.	APPROVAL NEEDED BY t.	MATERIAL NEEDED BY u.	CONTRACTOR ACTION: CODE v.	DATE w.	SUBMIT TO GOVERN-MENT x.	GOVERNMENT ACTION: CODE y.	DATE z.	REMARKS aa.
			1.2	Wood Items, Siding, and Trim	X											X	AR									
			1.2	Finish Carpentry		X										X	ED									
			2.1.6	Moldings								X				X	ED									
			1.2	Fascias and Trim								X			X		AR									
			2.1.7.1	Wall Cap and Wall Base								X				X	ED									

SUBMITTAL REGISTER
(ER 415 1-10)

CONTRACT NO.

TITLE AND LOCATION
Defense Security Service, Ft. Meade, MD

CONTRACTOR

SPECIFICATION SECTION
06400

ACTIVITY NO. a.	TRANS-MITTAL NO. b.	ITEM NO c.	SPECIFICATION PARAGRAPH NUMBER d.	DESCRIPTION OF ITEM SUBMITTED e.	TYPE OF SUBMITTAL: DATA f.	DRAWINGS g.	INSTRUCTIONS h.	SCHEDULES i.	STATEMENTS j.	REPORTS k.	CERTIFICATES l.	SAMPLES m.	RECORDS n.	O&M MANUALS o.	CLASSIFICATION: INFORMATION ONLY p.	GOVERNMENT APPROVED q.	REVIEWER r.	CONTRACTOR SCHEDULE DATES: SUBMIT s.	APPROVAL NEEDED BY t.	MATERIAL NEEDED BY u.	CONTRACTOR ACTION: CODE v.	DATE w.	SUBMIT TO GOVERN-MENT x.	GOVERNMENT ACTION: CODE y.	DATE z.	REMARKS aa.
			1.2	Plastic Laminate, Oak Edge	X											X	ED									
				Banding, Wall Trim, Fabric, Hardware																						
			2.2.1	Guard Desk		X										X	ED									
			2.2.2	Plastic Laminate								X				X	ED									
			1.2	Oak Edge Banding								X				X	ED									
			1.2	Fabric								X				X	ED									
			2.4	Guard Desk Hardware								X				X	ED									

SUBMITTAL REGISTER
(ER 415 1-10)

CONTRACT NO.

TITLE AND LOCATION
Defense Security Service, Ft. Meade, MD

CONTRACTOR

SPECIFICATION SECTION
06650

ACTIVITY NO. a.	TRANS-MITTAL NO. b.	ITEM NO c.	SPECIFICATION PARAGRAPH NUMBER d.	DESCRIPTION OF ITEM SUBMITTED e.	TYPE OF SUBMITTAL: DATA f.	DRAWINGS g.	INSTRUCTIONS h.	SCHEDULES i.	STATEMENTS j.	REPORTS k.	CERTIFICATES l.	SAMPLES m.	RECORDS n.	O&M MANUALS o.	CLASSIFICATION: INFORMATION ONLY p.	GOVERNMENT APPROVED q.	REVIEWER r.	CONTRACTOR SCHEDULE DATES: SUBMIT s.	APPROVAL NEEDED BY t.	MATERIAL NEEDED BY u.	CONTRACTOR ACTION: CODE v.	DATE w.	SUBMIT TO GOVERN-MENT x.	GOVERNMENT ACTION: CODE y.	DATE z.	REMARKS aa.
			1.2	Solid Polymer Fabrication and	X											X	ED									
				Accessories																						
			1.2	Solid Polymer Fabrication		X										X	ED									
			1.2	Solid Polymer Fabrication								X				X	ED									
			1.2	Solid Polymer Fabrication and										X	X		AR									
				Accessories																						

SUBMITTAL REGISTER
(ER 415 1-10)

CONTRACT NO.

TITLE AND LOCATION
Defense Security Service, Ft. Meade, MD

CONTRACTOR

SPECIFICATION SECTION
07210

ACTIVITY NO. a.	TRANS-MITTAL NO. b.	ITEM NO c.	SPECIFICATION PARAGRAPH NUMBER d.	DESCRIPTION OF ITEM SUBMITTED e.	TYPE OF SUBMITTAL: DATA f.	DRAWINGS g.	INSTRUCTIONS h.	SCHEDULES i.	STATEMENTS j.	REPORTS k.	CERTIFICATES l.	SAMPLES m.	RECORDS n.	O&M MANUALS o.	CLASSI-FICATION: INFORMATION ONLY p.	GOVERNMENT APPROVED q.	REVIEWER r.	CONTRACTOR SCHEDULE DATES: SUBMIT s.	APPROVAL NEEDED BY t.	MATERIAL NEEDED BY u.	CONTRACTOR ACTION: CODE v.	DATE w.	SUBMIT TO GOVERN-MENT x.	GOVERNMENT ACTION: CODE y.	DATE z.	REMARKS aa.
			1.2	Glass Fiber Insulation Board	X										X		AR									
			2.1.1.2	Batts and Rolls	X										X		AR									
			2.1.2	Mineral-Fiber Batts	X										X		AR									
			2.1.3	Mineral-Fiber Flexible Blankets	X										X		AR									
			1.2	Blown-In Mineral-Fiber Insulation	X										X		AR									
			2.1.4	Rigid Polystyrene Board	X										X		AR									
			2.1.5	Rigid Polyurethane Board	X										X		AR									
			2.1.6	Vapor Barrier	X										X		AR									
			1.2	Vapor Barrier Tape	X										X		AR									
			2.1.8	Water-Vapor Barrier Subgrade	X										X		AR									
				Covers																						
			2.2.1	Fasteners	X										X		AR									
			1.2	Adhesive	X										X		AR									
			2.2.3	Nails	X																					
			2.2.4	Staples	X										X		AR									
			2.2.5	Wire Netting	X										X		AR									
			2.2.6	Vapor-Barrier Adhesive	X										X		AR									
			2.2.7	Sand	X										X		AR									
			2.2.1	Fasteners			X								X		AR									
			1.2	Pneumatic Blowing Machine			X								X		AR									
			2.2.6	Vapor-Barrier Adhesive			X								X		AR									
			2.1.8	Water-Vapor Barrier Subgrade						X					X		AR									
				Covers																						
			1.2	Glass Fiber Insulation Board							X				X		AR									
			2.1.1.2	Batts and Rolls							X				X		AR									
			2.1.2	Mineral-Fiber Batts							X				X		AR									
			2.1.3	Mineral-Fiber Flexible Blankets							X				X		AR									
			1.2	Blown-In Mineral-Fiber Insulation							X				X		AR									
			2.1.4	Rigid Polystyrene Board							X				X		AR									

SUBMITTAL REGISTER
(ER 415 1-10)

CONTRACT NO.

TITLE AND LOCATION
Defense Security Service, Ft. Meade, MD

CONTRACTOR

SPECIFICATION SECTION
07210

ACTIVITY NO. a.	TRANS-MITTAL NO. b.	ITEM NO c.	SPECIFICATION PARAGRAPH NUMBER d.	DESCRIPTION OF ITEM SUBMITTED e.	TYPE OF SUBMITTAL: DATA f.	DRAWINGS g.	INSTRUCTIONS h.	SCHEDULES i.	STATEMENTS j.	REPORTS k.	CERTIFICATES l.	SAMPLES m.	RECORDS n.	O&M MANUALS o.	CLASSI-FICATION: INFORMATION ONLY p.	GOVERNMENT APPROVED q.	REVIEWER r.	CONTRACTOR SCHEDULE DATES: SUBMIT s.	APPROVAL NEEDED BY t.	MATERIAL NEEDED BY u.	CONTRACTOR ACTION: CODE v.	DATE w.	SUBMIT TO GOVERN-MENT x.	GOVERNMENT ACTION: CODE y.	DATE z.	REMARKS aa.
			2.1.5	Rigid Polyurethane Board							X				X		AR									
			2.1.6	Vapor Barrier							X				X		AR									
			1.2	Vapor Barrier Tape							X				X		AR									
			2.1.8	Water-Vapor Barrier Subgrade							X				X		AR									
				Covers																						
			2.2.4	Staples							X				X		AR									
			2.2.5	Wire Netting							X				X		AR									
			1.2	Fire-Retardant Treated Wood Furring							X				X		AR									
				Strips																						
			1.2	Glass-Fiberboard								X				X	AR									
			1.2	Mineral-Wool Batt								X				X	AR									
			1.2	Mineral-Fiber Flexible Blanket								X				X	AR									
			2.1.6	Vapor-Barrier								X				X	AR									
			1.2	Blown-In Mineral-Fiber Insulation								X				X	AR									
			1.2	Vapor Barrier Tape								X			X		AR									
			1.2	Vapor Barrier Subgrade Covers								X			X		AR									
			2.1.4	Rigid Polystyrene Board								X			X		AR									
			2.1.5	Rigid Polyurethane Board								X			X		AR									
			2.2.1	Fasteners								X			X		AR									
			1.2	Adhesives								X			X		AR									
			2.2.5	Wire Netting								X			X		AR									

SUBMITTAL REGISTER
(ER 415 1-10)

CONTRACT NO.

TITLE AND LOCATION
Defense Security Service, Ft. Meade, MD

CONTRACTOR

SPECIFICATION SECTION
07270

ACTIVITY NO. a.	TRANS-MITTAL NO. b.	ITEM NO c.	SPECIFICATION PARAGRAPH NUMBER d.	DESCRIPTION OF ITEM SUBMITTED e.	TYPE OF SUBMITTAL: DATA f.	DRAWINGS g.	INSTRUCTIONS h.	SCHEDULES i.	STATEMENTS j.	REPORTS k.	CERTIFICATES l.	SAMPLES m.	RECORDS n.	O&M MANUALS o.	CLASSIFICATION: INFORMATION ONLY p.	GOVERNMENT APPROVED q.	REVIEWER r.	CONTRACTOR SCHEDULE DATES: SUBMIT s.	APPROVAL NEEDED BY t.	MATERIAL NEEDED BY u.	CONTRACTOR ACTION: CODE v.	DATE w.	SUBMIT TO GOVERN-MENT x.	GOVERNMENT ACTION: CODE y.	DATE z.	REMARKS aa.
			2.1	Firestopping Materials		X									X		AR									
			2.1	Firestopping Materials							X				X		AR									
			1.5	Installer Qualifications							X				X		AR									
			3.3	Inspection							X				X		AR									

SUBMITTAL REGISTER
(ER 415 1-10)

CONTRACT NO.

TITLE AND LOCATION
Defense Security Service, Ft. Meade, MD

CONTRACTOR

SPECIFICATION SECTION
07416

ACTIVITY NO. a.	TRANS-MITTAL NO. b.	ITEM NO c.	SPECIFICATION PARAGRAPH NUMBER d.	DESCRIPTION OF ITEM SUBMITTED e.	TYPE OF SUBMITTAL: DATA f.	DRAWINGS g.	INSTRUCTIONS h.	SCHEDULES i.	STATEMENTS j.	REPORTS k.	CERTIFICATES l.	SAMPLES m.	RECORDS n.	O&M MANUALS o.	CLASSIFICATION: INFORMATION ONLY p.	GOVERNMENT APPROVED q.	REVIEWER r.	CONTRACTOR SCHEDULE DATES: SUBMIT s.	APPROVAL NEEDED BY t.	MATERIAL NEEDED BY u.	CONTRACTOR ACTION: CODE v.	DATE w.	SUBMIT TO GOVERN-MENT x.	GOVERNMENT ACTION: CODE y.	DATE z.	REMARKS aa.
			1.5	Design Analysis	X											X	ED									
			1.5	Structural Standing Seam Metal Roof		X										X	ED									
				System																						
			1.5	Qualifications					X							X	AR									
			1.5	Test Report for Uplift Resistance of						X						X	ED									
				the SSSMR																						
			1.5	Structural Standing Seam Metal Roof							X					X	ED									
				System																						
			1.5	Insulation							X					X	ED									
			2.3	Accessories								X				X	AR									
			2.1	Roof Panels								X				X	AR									
			2.6	Factory Color Finish								X				X	ED									
			2.4	Fasteners								X				X	AR									
			1.5	Insulation								X			X		AR									
			2.8	Gaskets and Insulating Compounds								X			X		AR									
			2.7	Sealant								X			X		AR									
			2.2	Concealed Anchor Clips								X			X		AR									
			2.5	Subpurlins								X			X		AR									
			2.9	EPDM Rubber Boots								X			X		AR									

SUBMITTAL REGISTER
(ER 415 1-10)

CONTRACT NO.

TITLE AND LOCATION
Defense Security Service, Ft. Meade, MD

CONTRACTOR

SPECIFICATION SECTION
07530

ACTIVITY NO. a.	TRANS-MITTAL NO. b.	ITEM NO c.	SPECIFICATION PARAGRAPH NUMBER d.	DESCRIPTION OF ITEM SUBMITTED e.	TYPE OF SUBMITTAL: DATA f.	DRAWINGS g.	INSTRUCTIONS h.	SCHEDULES i.	STATEMENTS j.	REPORTS k.	CERTIFICATES l.	SAMPLES m.	RECORDS n.	O&M MANUALS o.	CLASSIFICATION: INFORMATION ONLY p.	GOVERNMENT APPROVED q.	REVIEWER r.	CONTRACTOR SCHEDULE DATES: SUBMIT s.	APPROVAL NEEDED BY t.	MATERIAL NEEDED BY u.	CONTRACTOR ACTION: CODE v.	DATE w.	SUBMIT TO GOVERN-MENT x.	GOVERNMENT ACTION: CODE y.	DATE z.	REMARKS aa.
			1.2	Roofing System		X										X	AR									
			1.2	Installation			X								X		AR									
			1.2	Protection Plan					X							X	AR									
			1.2	Inspection					X						X		AR									
			1.2	Materials							X				X		AR									

SUBMITTAL REGISTER
(ER 415 1-10)

CONTRACT NO.

TITLE AND LOCATION
Defense Security Service, Ft. Meade, MD

CONTRACTOR

SPECIFICATION SECTION
07600

ACTIVITY NO. a.	TRANS-MITTAL NO. b.	ITEM NO c.	SPECIFICATION PARAGRAPH NUMBER d.	DESCRIPTION OF ITEM SUBMITTED e.	TYPE OF SUBMITTAL: DATA f.	DRAWINGS g.	INSTRUCTIONS h.	SCHEDULES i.	STATEMENTS j.	REPORTS k.	CERTIFICATES l.	SAMPLES m.	RECORDS n.	O&M MANUALS o.	CLASSIFICATION: INFORMATION ONLY p.	GOVERNMENT APPROVED q.	REVIEWER r.	CONTRACTOR SCHEDULE DATES: SUBMIT s.	APPROVAL NEEDED BY t.	MATERIAL NEEDED BY u.	CONTRACTOR ACTION: CODE v.	DATE w.	SUBMIT TO GOVERN-MENT x.	GOVERNMENT ACTION: CODE y.	DATE z.	REMARKS aa.
			2.1	Materials		X									X		AR									

SUBMITTAL REGISTER
(ER 415 1-10)

CONTRACT NO.

TITLE AND LOCATION
Defense Security Service, Ft. Meade, MD

CONTRACTOR

SPECIFICATION SECTION
07900

ACTIVITY NO. a.	TRANS-MITTAL NO. b.	ITEM NO c.	SPECIFICATION PARAGRAPH NUMBER d.	DESCRIPTION OF ITEM SUBMITTED e.	TYPE OF SUBMITTAL: DATA f.	DRAWINGS g.	INSTRUCTIONS h.	SCHEDULES i.	STATEMENTS j.	REPORTS k.	CERTIFICATES l.	SAMPLES m.	RECORDS n.	O&M MANUALS o.	CLASSIFICATION: INFORMATION ONLY p.	GOVERNMENT APPROVED q.	REVIEWER r.	CONTRACTOR SCHEDULE DATES: SUBMIT s.	APPROVAL NEEDED BY t.	MATERIAL NEEDED BY u.	CONTRACTOR ACTION: CODE v.	DATE w.	SUBMIT TO GOVERN-MENT x.	GOVERNMENT ACTION: CODE y.	DATE z.	REMARKS aa.
			2.1	Backing	X										X		AR									
			2.2	Bond-Breaker	X										X		AR									
			2.4	Sealant	X										X		AR									
			2.4	Sealant							X				X		AR									

SUBMITTAL REGISTER
(ER 415 1-10)

CONTRACT NO.

TITLE AND LOCATION
Defense Security Service, Ft. Meade, MD

CONTRACTOR

SPECIFICATION SECTION
08110

ACTIVITY NO. a.	TRANS-MITTAL NO. b.	ITEM NO c.	SPECIFICATION PARAGRAPH NUMBER d.	DESCRIPTION OF ITEM SUBMITTED e.	TYPE OF SUBMITTAL: DATA f.	DRAWINGS g.	INSTRUCTIONS h.	SCHEDULES i.	STATEMENTS j.	REPORTS k.	CERTIFICATES l.	SAMPLES m.	RECORDS n.	O&M MANUALS o.	CLASSIFICATION: INFORMATION ONLY p.	GOVERNMENT APPROVED q.	REVIEWER r.	CONTRACTOR SCHEDULE DATES: SUBMIT s.	APPROVAL NEEDED BY t.	MATERIAL NEEDED BY u.	CONTRACTOR ACTION: CODE v.	DATE w.	SUBMIT TO GOVERN-MENT x.	GOVERNMENT ACTION: CODE y.	DATE z.	REMARKS aa.
			1.2	Steel Doors and Frames		X										X	ED									
			2.2	Fire Rated Doors						X					X		AR									
			2.2	Fire Rated Doors							X				X		AR									
			2.3	Thermal Insulated Doors							X				X		AR									
			1.2	Security Doors							X				X		AR									

SUBMITTAL REGISTER
(ER 415 1-10)

CONTRACT NO.

TITLE AND LOCATION
Defense Security Service, Ft. Meade, MD

CONTRACTOR

SPECIFICATION SECTION
08120

ACTIVITY NO. a.	TRANS-MITTAL NO. b.	ITEM NO. c.	SPECIFICATION PARAGRAPH NUMBER d.	DESCRIPTION OF ITEM SUBMITTED e.	TYPE OF SUBMITTAL: DATA f.	DRAWINGS g.	INSTRUCTIONS h.	SCHEDULES i.	STATEMENTS j.	REPORTS k.	CERTIFICATES l.	SAMPLES m.	RECORDS n.	O&M MANUALS o.	CLASSIFICATION: INFORMATION ONLY p.	GOVERNMENT APPROVED q.	REVIEWER r.	CONTRACTOR SCHEDULE DATES: SUBMIT s.	APPROVAL NEEDED BY t.	MATERIAL NEEDED BY u.	CONTRACTOR ACTION: CODE v.	DATE w.	SUBMIT TO GOVERN-MENT x.	GOVERNMENT ACTION: CODE y.	DATE z.	REMARKS aa.
			1.4	Aluminum Doors and Frames	X											X	ED									
			1.4	Aluminum Doors and Frames		X										X	ED									
			3.1.2	Installation			X								X		AR									
			1.4	Cleaning			X								X		AR									
			1.4	Full-Glazed and Flush Doors						X						X	AR									
			2.1.1	Finishes								X				X	ED									

SUBMITTAL REGISTER
(ER 415 1-10)

CONTRACT NO.

TITLE AND LOCATION
Defense Security Service, Ft. Meade, MD

CONTRACTOR

SPECIFICATION SECTION
08210

ACTIVITY NO. a.	TRANS-MITTAL NO. b.	ITEM NO c.	SPECIFICATION PARAGRAPH NUMBER d.	DESCRIPTION OF ITEM SUBMITTED e.	TYPE OF SUBMITTAL: DATA f.	DRAWINGS g.	INSTRUCTIONS h.	SCHEDULES i.	STATEMENTS j.	REPORTS k.	CERTIFICATES l.	SAMPLES m.	RECORDS n.	O&M MANUALS o.	CLASSIFICATION: INFORMATION ONLY p.	GOVERNMENT APPROVED q.	REVIEWER r.	CONTRACTOR SCHEDULE DATES: SUBMIT s.	APPROVAL NEEDED BY t.	MATERIAL NEEDED BY u.	CONTRACTOR ACTION: CODE v.	DATE w.	SUBMIT TO GOVERN-MENT x.	GOVERNMENT ACTION: CODE y.	DATE z.	REMARKS aa.
			1.3	Wood Doors		X										X	ED									
			3.1.2	Fire Doors			X								X		AR									
			2.3	Fire Rated Doors							X					X	AR									
			1.3	Adhesives							X					X	AR									
			2.6.1	Factory Coated Natural Finish								X				X	ED									

SUBMITTAL REGISTER
(ER 415 1-10)

CONTRACT NO.

TITLE AND LOCATION
Defense Security Service, Ft. Meade, MD

CONTRACTOR

SPECIFICATION SECTION
08330

ACTIVITY NO. a.	TRANS-MITTAL NO. b.	ITEM NO c.	SPECIFICATION PARAGRAPH NUMBER d.	DESCRIPTION OF ITEM SUBMITTED e.	TYPE OF SUBMITTAL: DATA f.	DRAWINGS g.	INSTRUCTIONS h.	SCHEDULES i.	STATEMENTS j.	REPORTS k.	CERTIFICATES l.	SAMPLES m.	RECORDS n.	O&M MANUALS o.	CLASSIFICATION: INFORMATION ONLY p.	GOVERNMENT APPROVED q.	REVIEWER r.	CONTRACTOR SCHEDULE DATES: SUBMIT s.	APPROVAL NEEDED BY t.	MATERIAL NEEDED BY u.	CONTRACTOR ACTION: CODE v.	DATE w.	SUBMIT TO GOVERN-MENT x.	GOVERNMENT ACTION: CODE y.	DATE z.	REMARKS aa.
			1.3	Overhead Rolling Door Unit	X											X	ED									
			1.3	Overhead Rolling Door Unit		X										X	ED									
			1.3	Overhead Rolling Door Unit			X								X		AR									
			1.3	Operation Manual										X	X		AR									
			1.3	Maintenance and Repair Manual										X	X		AR									

SUBMITTAL REGISTER
(ER 415 1-10)

CONTRACT NO.

TITLE AND LOCATION
Defense Security Service, Ft. Meade, MD

CONTRACTOR

SPECIFICATION SECTION
08520

ACTIVITY NO. a.	TRANS-MITTAL NO. b.	ITEM NO c.	SPECIFICATION PARAGRAPH NUMBER d.	DESCRIPTION OF ITEM SUBMITTED e.	TYPE OF SUBMITTAL: DATA f.	DRAWINGS g.	INSTRUCTIONS h.	SCHEDULES i.	STATEMENTS j.	REPORTS k.	CERTIFICATES l.	SAMPLES m.	RECORDS n.	O&M MANUALS o.	CLASSIFICATION: INFORMATION ONLY p.	GOVERNMENT APPROVED q.	REVIEWER r.	CONTRACTOR SCHEDULE DATES: SUBMIT s.	APPROVAL NEEDED BY t.	MATERIAL NEEDED BY u.	CONTRACTOR ACTION: CODE v.	DATE w.	SUBMIT TO GOVERN-MENT x.	GOVERNMENT ACTION: CODE y.	DATE z.	REMARKS aa.
			1.3	Aluminum Windows	X											X	AR									
			1.3	Aluminum Windows		X										X	AR									
			1.3	Aluminum Windows			X								X		AR									
			1.3	Aluminum Windows						X						X	AR									
			1.3	Aluminum Windows							X				X		AR									
			1.3	Aluminum Windows								X				X	ED									

SUBMITTAL REGISTER
(ER 415 1-10)

CONTRACT NO.

TITLE AND LOCATION
Defense Security Service, Ft. Meade, MD

CONTRACTOR

SPECIFICATION SECTION
08700

ACTIVITY NO a.	TRANS-MITTAL NO. b.	ITEM NO c.	SPECIFICATION PARAGRAPH NUMBER d.	DESCRIPTION OF ITEM SUBMITTED e.	TYPE OF SUBMITTAL: DATA f.	DRAWINGS g.	INSTRUCTIONS h.	SCHEDULES i.	STATEMENTS j.	REPORTS k.	CERTIFICATES l.	SAMPLES m.	RECORDS n.	O&M MANUALS o.	CLASSIFICATION: INFORMATION ONLY p.	GOVERNMENT APPROVED q.	REVIEWER r.	CONTRACTOR SCHEDULE DATES: SUBMIT s.	APPROVAL NEEDED BY t.	MATERIAL NEEDED BY u.	CONTRACTOR ACTION: CODE v.	DATE w.	SUBMIT TO GOVERN-MENT x.	GOVERNMENT ACTION: CODE y.	DATE z.	REMARKS aa.
			1.2	Hardware and Accessories	X										X		AR									
			1.2	Hardware Devices		X										X	ED									
			1.2	Hardware Schedule				X								X	ED									
			1.2	Keying Schedule				X								X	ED									
			1.2	Hardware and Accessories							X				X		AR									

SUBMITTAL REGISTER
(ER 415 1-10)

CONTRACT NO.

TITLE AND LOCATION
Defense Security Service, Ft. Meade, MD

CONTRACTOR

SPECIFICATION SECTION
08810

ACTIVITY NO. a.	TRANS-MITTAL NO. b.	ITEM NO c.	SPECIFICATION PARAGRAPH NUMBER d.	DESCRIPTION OF ITEM SUBMITTED e.	TYPE OF SUBMITTAL: DATA f.	DRAWINGS g.	INSTRUCTIONS h.	SCHEDULES i.	STATEMENTS j.	REPORTS k.	CERTIFICATES l.	SAMPLES m.	RECORDS n.	O&M MANUALS o.	CLASSIFICATION: INFORMATION ONLY p.	GOVERNMENT APPROVED q.	REVIEWER r.	CONTRACTOR SCHEDULE DATES: SUBMIT s.	APPROVAL NEEDED BY t.	MATERIAL NEEDED BY u.	CONTRACTOR ACTION: CODE v.	DATE w.	SUBMIT TO GOVERN-MENT x.	GOVERNMENT ACTION: CODE y.	DATE z.	REMARKS aa.
			1.2	Glass	X											X	AR									
			1.2	Glazing Accessories	X											X	AR									
			1.2	Glazing Materials and Accessories		X										X	AR									
			1.2	Glass							X				X		AR									
			1.2	Glass								X				X	AR									

SUBMITTAL REGISTER
(ER 415 1-10)

CONTRACT NO.

TITLE AND LOCATION
Defense Security Service, Ft. Meade, MD

CONTRACTOR

SPECIFICATION SECTION
09250

ACTIVITY NO. a.	TRANS-MITTAL NO. b.	ITEM NO c.	SPECIFICATION PARAGRAPH NUMBER d.	DESCRIPTION OF ITEM SUBMITTED e.	TYPE OF SUBMITTAL: DATA f.	DRAWINGS g.	INSTRUCTIONS h.	SCHEDULES i.	STATEMENTS j.	REPORTS k.	CERTIFICATES l.	SAMPLES m.	RECORDS n.	O&M MANUALS o.	CLASSIFICATION: INFORMATION ONLY p.	GOVERNMENT APPROVED q.	REVIEWER r.	CONTRACTOR SCHEDULE DATES: SUBMIT s.	APPROVAL NEEDED BY t.	MATERIAL NEEDED BY u.	CONTRACTOR ACTION: CODE v.	DATE w.	SUBMIT TO GOVERN-MENT x.	GOVERNMENT ACTION: CODE y.	DATE z.	REMARKS aa.
			1.3	Steel Framing		X									X		AR									
			1.3	Control Joints		X									X		AR									
			3.6	Fire-Resistant Assemblies		X									X		AR									
			1.3	Gypsum Wallboard							X				X		AR									
			2.3.3	Water-Resistant Gypsum Board							X				X		AR									
			2.3.5	Exterior Gypsum Soffit Board							X				X		AR									
			1.3	Steel Framing							X				X		AR									
			2.3.2	Fire-Rated Gypsum Board							X				X		AR									

SUBMITTAL REGISTER
(ER 415 1-10)

CONTRACT NO.

TITLE AND LOCATION
Defense Security Service, Ft. Meade, MD

CONTRACTOR

SPECIFICATION SECTION
09310

ACTIVITY NO. a.	TRANS-MITTAL NO. b.	ITEM NO c.	SPECIFICATION PARAGRAPH NUMBER d.	DESCRIPTION OF ITEM SUBMITTED e.	TYPE OF SUBMITTAL: DATA f.	DRAWINGS g.	INSTRUCTIONS h.	SCHEDULES i.	STATEMENTS j.	REPORTS k.	CERTIFICATES l.	SAMPLES m.	RECORDS n.	O&M MANUALS o.	CLASSIFICATION: INFORMATION ONLY p.	GOVERNMENT APPROVED q.	REVIEWER r.	CONTRACTOR SCHEDULE DATES: SUBMIT s.	APPROVAL NEEDED BY t.	MATERIAL NEEDED BY u.	CONTRACTOR ACTION: CODE v.	DATE w.	SUBMIT TO GOVERN-MENT x.	GOVERNMENT ACTION: CODE y.	DATE z.	REMARKS aa.
			2.1	Tile	X											X	ED									
			2.2	Setting-Bed	X										X		AR									
			2.4	Mortar, Grout, and Adhesive	X											X	ED									
			2.1	Tile			X								X		AR									
			1.2	Mortar and Grout			X								X		AR									
			1.2	Testing						X					X		AR									
			2.1	Tile							X				X		AR									
			2.4	Mortar, Grout, and Adhesive							X				X		AR									
			2.1	Tile								X				X	ED									
			1.2	Accessories								X				X	ED									
			2.5	Marble Thresholds								X				X	ED									

SUBMITTAL REGISTER
(ER 415 1-10)

CONTRACT NO.

TITLE AND LOCATION
Defense Security Service, Ft. Meade, MD

CONTRACTOR

SPECIFICATION SECTION
09445

ACTIVITY NO. a.	TRANS-MITTAL NO. b.	ITEM NO c.	SPECIFICATION PARAGRAPH NUMBER d.	DESCRIPTION OF ITEM SUBMITTED e.	TYPE OF SUBMITTAL: DATA f.	DRAWINGS g.	INSTRUCTIONS h.	SCHEDULES i.	STATEMENTS j.	REPORTS k.	CERTIFICATES l.	SAMPLES m.	RECORDS n.	O&M MANUALS o.	CLASSIFICATION: INFORMATION ONLY p.	GOVERNMENT APPROVED q.	REVIEWER r.	CONTRACTOR SCHEDULE DATES: SUBMIT s.	APPROVAL NEEDED BY t.	MATERIAL NEEDED BY u.	CONTRACTOR ACTION: CODE v.	DATE w.	SUBMIT TO GOVERN-MENT x.	GOVERNMENT ACTION: CODE y.	DATE z.	REMARKS aa.
			1.3	Terrazzo Floor System	X										X		AR									
			3.2	Mixing, Proportioning, and	X										X		AR									
				Installation																						
			3.4	Cleaning and Sealing	X										X		AR									
			1.3	Terrazzo Floor System		X										X	ED									
			1.3	Terrazzo Floor System							X					X	ED									
			1.3	Terrazzo Floor System								X				X	ED									

SUBMITTAL REGISTER
(ER 415 1-10)

CONTRACT NO.

TITLE AND LOCATION
Defense Security Service, Ft. Meade, MD

CONTRACTOR

SPECIFICATION SECTION
09510

ACTIVITY NO. a.	TRANS-MITTAL NO. b.	ITEM NO c.	SPECIFICATION PARAGRAPH NUMBER d.	DESCRIPTION OF ITEM SUBMITTED e.	TYPE OF SUBMITTAL: DATA f.	DRAWINGS g.	INSTRUCTIONS h.	SCHEDULES i.	STATEMENTS j.	REPORTS k.	CERTIFICATES l.	SAMPLES m.	RECORDS n.	O&M MANUALS o.	CLASSIFICATION: INFORMATION ONLY p.	GOVERNMENT APPROVED q.	REVIEWER r.	CONTRACTOR SCHEDULE DATES: SUBMIT s.	APPROVAL NEEDED BY t.	MATERIAL NEEDED BY u.	CONTRACTOR ACTION: CODE v.	DATE w.	SUBMIT TO GOVERN-MENT x.	GOVERNMENT ACTION: CODE y.	DATE z.	REMARKS aa.
			1.3	Acoustical Ceiling System	X											X	ED									
			1.3	Acoustical Ceiling System		X										X	ED									
			2.5	Fire Resistive Ceilings						X					X		AR									
			2.8	Ceiling Attenuation Class and Test						X					X		AR									
			1.3	Use of Recycled/Recovered Materials						X					X		AR									
			2.1	Acoustical Units							X				X		AR									
			2.1	Acoustical Units								X				X	ED									

SUBMITTAL REGISTER
(ER 415 1-10)

CONTRACT NO.

TITLE AND LOCATION
Defense Security Service, Ft. Meade, MD

CONTRACTOR

SPECIFICATION SECTION
09520

ACTIVITY NO. a.	TRANS-MITTAL NO. b.	ITEM NO c.	SPECIFICATION PARAGRAPH NUMBER d.	DESCRIPTION OF ITEM SUBMITTED e.	TYPE OF SUBMITTAL: DATA f.	DRAWINGS g.	INSTRUCTIONS h.	SCHEDULES i.	STATEMENTS j.	REPORTS k.	CERTIFICATES l.	SAMPLES m.	RECORDS n.	O&M MANUALS o.	CLASSIFICATION: INFORMATION ONLY p.	GOVERNMENT APPROVED q.	REVIEWER r.	CONTRACTOR SCHEDULE DATES: SUBMIT s.	APPROVAL NEEDED BY t.	MATERIAL NEEDED BY u.	CONTRACTOR ACTION: CODE v.	DATE w.	SUBMIT TO GOVERN-MENT x.	GOVERNMENT ACTION: CODE y.	DATE z.	REMARKS aa.
			1.2	Acoustical Wall Panels	X											X	ED									
			1.2	Acoustical Wall Panels		X										X	ED									
			1.2	Acoustical Wall Panels			X								X		AR									
			1.2	Acoustical Wall Panels							X				X		AR									
			1.2	Acoustical Wall Panels								X				X	ED									

SUBMITTAL REGISTER
(ER 415 1-10)

CONTRACT NO.

TITLE AND LOCATION
Defense Security Service, Ft. Meade, MD

CONTRACTOR

SPECIFICATION SECTION
09650

ACTIVITY NO. a.	TRANS-MITTAL NO. b.	ITEM NO c.	SPECIFICATION PARAGRAPH NUMBER d.	DESCRIPTION OF ITEM SUBMITTED e.	TYPE OF SUBMITTAL: DATA f.	DRAWINGS g.	INSTRUCTIONS h.	SCHEDULES i.	STATEMENTS j.	REPORTS k.	CERTIFICATES l.	SAMPLES m.	RECORDS n.	O&M MANUALS o.	CLASSIFICATION: INFORMATION ONLY p.	GOVERNMENT APPROVED q.	REVIEWER r.	CONTRACTOR SCHEDULE DATES: SUBMIT s.	APPROVAL NEEDED BY t.	MATERIAL NEEDED BY u.	CONTRACTOR ACTION: CODE v.	DATE w.	SUBMIT TO GOVERN-MENT x.	GOVERNMENT ACTION: CODE y.	DATE z.	REMARKS aa.
			1.2	Resilient Flooring and Accessories	X											X	ED									
			1.2	Resilient Flooring and Accessories						X					X		AR									
			1.2	Resilient Flooring and Accessories								X				X	ED									

SUBMITTAL REGISTER
(ER 415 1-10)

CONTRACT NO.

TITLE AND LOCATION
Defense Security Service, Ft. Meade, MD

CONTRACTOR

SPECIFICATION SECTION
09680

ACTIVITY NO. a.	TRANS-MITTAL NO. b.	ITEM NO c.	SPECIFICATION PARAGRAPH NUMBER d.	DESCRIPTION OF ITEM SUBMITTED e.	TYPE OF SUBMITTAL: DATA f.	DRAWINGS g.	INSTRUCTIONS h.	SCHEDULES i.	STATEMENTS j.	REPORTS k.	CERTIFICATES l.	SAMPLES m.	RECORDS n.	O&M MANUALS o.	CLASSIFICATION: INFORMATION ONLY p.	GOVERNMENT APPROVED q.	REVIEWER r.	CONTRACTOR SCHEDULE DATES: SUBMIT s.	APPROVAL NEEDED BY t.	MATERIAL NEEDED BY u.	CONTRACTOR ACTION: CODE v.	DATE w.	SUBMIT TO GOVERN-MENT x.	GOVERNMENT ACTION: CODE y.	DATE z.	REMARKS aa.
			1.2	Carpet and Accessories	X										X		AR									
			3.3	Installation		X										X	ED									
			1.2	Carpet and Accessories			X								X		AR									
			1.2	Moisture and Alkalinity Tests						X					X		AR									
			1.2	Carpet and Accessories							X				X		AR									
			1.2	Carpet and Accessories								X				X	ED									
			1.2	Carpet and Accessories										X	X		AR									

SUBMITTAL REGISTER
(ER 415 1-10)

CONTRACT NO.

TITLE AND LOCATION
Defense Security Service, Ft. Meade, MD

CONTRACTOR

SPECIFICATION SECTION
09720

ACTIVITY NO. a.	TRANS-MITTAL NO. b.	ITEM NO c.	SPECIFICATION PARAGRAPH NUMBER d.	DESCRIPTION OF ITEM SUBMITTED e.	TYPE OF SUBMITTAL: DATA f.	DRAWINGS g.	INSTRUCTIONS h.	SCHEDULES i.	STATEMENTS j.	REPORTS k.	CERTIFICATES l.	SAMPLES m.	RECORDS n.	O&M MANUALS o.	CLASSIFICATION: INFORMATION ONLY p.	GOVERNMENT APPROVED q.	REVIEWER r.	CONTRACTOR SCHEDULE DATES: SUBMIT s.	APPROVAL NEEDED BY t.	MATERIAL NEEDED BY u.	CONTRACTOR ACTION: CODE v.	DATE w.	SUBMIT TO GOVERN-MENT x.	GOVERNMENT ACTION: CODE y.	DATE z.	REMARKS aa.
			1.2	Wallcovering and Accessories	X										X		AR									
			3.3	Installation			X								X		AR									
			1.2	Maintenance			X								X		AR									
			1.2	Wallcovering and Accessories								X				X	ED									

SUBMITTAL REGISTER
(ER 415 1-10)

CONTRACT NO.

TITLE AND LOCATION
Defense Security Service, Ft. Meade, MD

CONTRACTOR

SPECIFICATION SECTION
09900

ACTIVITY NO. a.	TRANS-MITTAL NO. b.	ITEM NO c.	SPECIFICATION PARAGRAPH NUMBER d.	DESCRIPTION OF ITEM SUBMITTED e.	TYPE OF SUBMITTAL: DATA f.	DRAWINGS g.	INSTRUCTIONS h.	SCHEDULES i.	STATEMENTS j.	REPORTS k.	CERTIFICATES l.	SAMPLES m.	RECORDS n.	O&M MANUALS o.	CLASSIFICATION: INFORMATION ONLY p.	GOVERNMENT APPROVED q.	REVIEWER r.	CONTRACTOR SCHEDULE DATES: SUBMIT s.	APPROVAL NEEDED BY t.	MATERIAL NEEDED BY u.	CONTRACTOR ACTION: CODE v.	DATE w.	SUBMIT TO GOVERN-MENT x.	GOVERNMENT ACTION: CODE y.	DATE z.	REMARKS aa.
			2.1	Paint	X										X		AR									
			3.3	Mixing and Thinning			X								X		AR									
			3.4	Application			X								X		AR									
			2.1	Paint						X						X	AR									
			2.1.3	Lead							X				X		AR									
			2.1.2	Mildewcide and Insecticide							X				X		AR									
			2.1.5	Volatile Organic Compound (VOC)							X				X		AR									
				Content																						
			1.2	Moisture-Curing Polyurethane								X			X		AR									
			2.1	Paint								X				X	AR									

SUBMITTAL REGISTER
(ER 415 1-10)

CONTRACT NO.

TITLE AND LOCATION
Defense Security Service, Ft. Meade, MD

CONTRACTOR

SPECIFICATION SECTION
10160

ACTIVITY NO. a.	TRANS-MITTAL NO. b.	ITEM NO c.	SPECIFICATION PARAGRAPH NUMBER d.	DESCRIPTION OF ITEM SUBMITTED e.	TYPE OF SUBMITTAL: DATA f.	DRAWINGS g.	INSTRUCTIONS h.	SCHEDULES i.	STATEMENTS j.	REPORTS k.	CERTIFICATES l.	SAMPLES m.	RECORDS n.	O&M MANUALS o.	CLASSIFICATION: INFORMATION ONLY p.	GOVERNMENT APPROVED q.	REVIEWER r.	CONTRACTOR SCHEDULE DATES: SUBMIT s.	APPROVAL NEEDED BY t.	MATERIAL NEEDED BY u.	CONTRACTOR ACTION: CODE v.	DATE w.	SUBMIT TO GOVERN-MENT x.	GOVERNMENT ACTION: CODE y.	DATE z.	REMARKS aa.
			1.3	Toilet Partition System	X										X		AR									
			1.3	Toilet Partition System		X									X		AR									
			1.3	Toilet Partition System								X				X	ED									

SUBMITTAL REGISTER
(ER 415 1-10)

CONTRACT NO.

TITLE AND LOCATION
Defense Security Service, Ft. Meade, MD

CONTRACTOR

SPECIFICATION SECTION
10201

ACTIVITY NO. a.	TRANS-MITTAL NO. b.	ITEM NO c.	SPECIFICATION PARAGRAPH NUMBER d.	DESCRIPTION OF ITEM SUBMITTED e.	TYPE OF SUBMITTAL: DATA f.	DRAWINGS g.	INSTRUCTIONS h.	SCHEDULES i.	STATEMENTS j.	REPORTS k.	CERTIFICATES l.	SAMPLES m.	RECORDS n.	O&M MANUALS o.	CLASSIFICATION: INFORMATION ONLY p.	GOVERNMENT APPROVED q.	REVIEWER r.	CONTRACTOR SCHEDULE DATES: SUBMIT s.	APPROVAL NEEDED BY t.	MATERIAL NEEDED BY u.	CONTRACTOR ACTION: CODE v.	DATE w.	SUBMIT TO GOVERN-MENT x.	GOVERNMENT ACTION: CODE y.	DATE z.	REMARKS aa.
			2.2	Wall Louvers		X										X	ED									
			1.2	Louvers								X				X	ED									

SUBMITTAL REGISTER
(ER 415 1-10)

CONTRACT NO.

TITLE AND LOCATION
Defense Security Service, Ft. Meade, MD

CONTRACTOR

SPECIFICATION SECTION
10260

ACTIVITY NO. a.	TRANS-MITTAL NO. b.	ITEM NO c.	SPECIFICATION PARAGRAPH NUMBER d.	DESCRIPTION OF ITEM SUBMITTED e.	TYPE OF SUBMITTAL: DATA f.	DRAWINGS g.	INSTRUCTIONS h.	SCHEDULES i.	STATEMENTS j.	REPORTS k.	CERTIFICATES l.	SAMPLES m.	RECORDS n.	O&M MANUALS o.	CLASSIFICATION: INFORMATION ONLY p.	GOVERNMENT APPROVED q.	REVIEWER r.	CONTRACTOR SCHEDULE DATES: SUBMIT s.	APPROVAL NEEDED BY t.	MATERIAL NEEDED BY u.	CONTRACTOR ACTION: CODE v.	DATE w.	SUBMIT TO GOVERN-MENT x.	GOVERNMENT ACTION: CODE y.	DATE z.	REMARKS aa.
			2.2	Corner Guards	X											X	ED									
			2.3	Wall Guards (Bumper Guards)	X											X	ED									
			2.2	Corner Guards		X										X	ED									
			2.3	Wall Guards (Bumper Guards)		X										X	ED									
			2.5	Finish								X				X	ED									

SUBMITTAL REGISTER
(ER 415 1-10)

CONTRACT NO.

TITLE AND LOCATION
Defense Security Service, Ft. Meade, MD

CONTRACTOR

SPECIFICATION SECTION
10270

ACTIVITY NO. a.	TRANS-MITTAL NO. b.	ITEM NO c.	SPECIFICATION PARAGRAPH NUMBER d.	DESCRIPTION OF ITEM SUBMITTED e.	TYPE OF SUBMITTAL: DATA f.	DRAWINGS g.	INSTRUCTIONS h.	SCHEDULES i.	STATEMENTS j.	REPORTS k.	CERTIFICATES l.	SAMPLES m.	RECORDS n.	O&M MANUALS o.	CLASSIFICATION: INFORMATION ONLY p.	GOVERNMENT APPROVED q.	REVIEWER r.	CONTRACTOR SCHEDULE DATES: SUBMIT s.	APPROVAL NEEDED BY t.	MATERIAL NEEDED BY u.	CONTRACTOR ACTION: CODE v.	DATE w.	SUBMIT TO GOVERN-MENT x.	GOVERNMENT ACTION: CODE y.	DATE z.	REMARKS aa.
			1.3	Raised Floor System	X											X	ED									
			1.3	Raised Floor System		X										X	ED									
			1.3	Tests						X						X	AR									
			1.3	Testing of Electrical Resistance						X						X	AR									
			1.3	Use of Recycled/Recovered Materials						X					X		AR									
			1.3	Raised Floor System							X					X	AR									
			1.3	Floor Finish Color and Pattern								X				X	ED									
			1.3	Panel Type and Suspension System								X				X	AR									

SUBMITTAL REGISTER
(ER 415 1-10)

CONTRACT NO.

TITLE AND LOCATION
Defense Security Service, Ft. Meade, MD

CONTRACTOR

SPECIFICATION SECTION
10400

ACTIVITY NO. a.	TRANS-MITTAL NO. b.	ITEM NO c.	SPECIFICATION PARAGRAPH NUMBER d.	DESCRIPTION OF ITEM SUBMITTED e.	TYPE OF SUBMITTAL: DATA f.	DRAWINGS g.	INSTRUCTIONS h.	SCHEDULES i.	STATEMENTS j.	REPORTS k.	CERTIFICATES l.	SAMPLES m.	RECORDS n.	O&M MANUALS o.	CLASSIFICATION: INFORMATION ONLY p.	GOVERNMENT APPROVED q.	REVIEWER r.	CONTRACTOR SCHEDULE DATES: SUBMIT s.	APPROVAL NEEDED BY t.	MATERIAL NEEDED BY u.	CONTRACTOR ACTION: CODE v.	DATE w.	SUBMIT TO GOVERN-MENT x.	GOVERNMENT ACTION: CODE y.	DATE z.	REMARKS aa.
			2.1	Projection Screens and Hardware	X										X		AR									
			2.1.4	Ceiling Recessed Projector Mounts	X										X		AR									
			2.1.5	Ceiling Mounted Monitor Brackets	X										X		AR									
			2.1	Projection Screens and Hardware		X									X		AR									
			2.1.4	Ceiling Recessed Projector Mounts		X									X		AR									
			2.1.5	Ceiling Mounted Monitor Brackets		X									X		AR									
			1.2	Projection Screens										X	X		AR									

SUBMITTAL REGISTER
(ER 415 1-10)

CONTRACT NO.

TITLE AND LOCATION
Defense Security Service, Ft. Meade, MD

CONTRACTOR

SPECIFICATION SECTION
10440

ACTIVITY NO. a.	TRANS-MITTAL NO. b.	ITEM NO c.	SPECIFICATION PARAGRAPH NUMBER d.	DESCRIPTION OF ITEM SUBMITTED e.	TYPE OF SUBMITTAL: DATA f.	DRAWINGS g.	INSTRUCTIONS h.	SCHEDULES i.	STATEMENTS j.	REPORTS k.	CERTIFICATES l.	SAMPLES m.	RECORDS n.	O&M MANUALS o.	CLASSIFICATION: INFORMATION ONLY p.	GOVERNMENT APPROVED q.	REVIEWER r.	CONTRACTOR SCHEDULE DATES: SUBMIT s.	APPROVAL NEEDED BY t.	MATERIAL NEEDED BY u.	CONTRACTOR ACTION: CODE v.	DATE w.	SUBMIT TO GOVERN-MENT x.	GOVERNMENT ACTION: CODE y.	DATE z.	REMARKS aa.
			1.3	Interior Signage	X											X	ED									
			1.3	Interior Signage		X										X	ED									
			1.3	Interior Signage								X				X	ED									

SUBMITTAL REGISTER
(ER 415 1-10)

CONTRACT NO.

TITLE AND LOCATION
Defense Security Service, Ft. Meade, MD

CONTRACTOR

SPECIFICATION SECTION
10523

ACTIVITY NO. a.	TRANS-MITTAL NO. b.	ITEM NO c.	SPECIFICATION PARAGRAPH NUMBER d.	DESCRIPTION OF ITEM SUBMITTED e.	TYPE OF SUBMITTAL: DATA f.	DRAWINGS g.	INSTRUCTIONS h.	SCHEDULES i.	STATEMENTS j.	REPORTS k.	CERTIFICATES l.	SAMPLES m.	RECORDS n.	O&M MANUALS o.	CLASSIFICATION: INFORMATION ONLY p.	GOVERNMENT APPROVED q.	REVIEWER r.	CONTRACTOR SCHEDULE DATES: SUBMIT s.	APPROVAL NEEDED BY t.	MATERIAL NEEDED BY u.	CONTRACTOR ACTION: CODE v.	DATE w.	SUBMIT TO GOVERN-MENT x.	GOVERNMENT ACTION: CODE y.	DATE z.	REMARKS aa.
			1.2	Fire Extinguishers	X											X	AR									
			1.2	Extinguisher Cabinet	X											X	ED									
			1.2	Wall Brackets	X											X	AR									
			1.2	Replacement Parts	X										X		AR									
			1.2	Fire Extinguisher Cabinets		X										X	ED									
			1.2	Certificate of Compliance							X				X		AR									
			1.2	Color and Finish								X				X	EDF									

SUBMITTAL REGISTER
(ER 415 1-10)

CONTRACT NO.

TITLE AND LOCATION
Defense Security Service, Ft. Meade, MD

CONTRACTOR

SPECIFICATION SECTION
10800

ACTIVITY NO. a.	TRANS-MITTAL NO. b.	ITEM NO c.	SPECIFICATION PARAGRAPH NUMBER d.	DESCRIPTION OF ITEM SUBMITTED e.	TYPE OF SUBMITTAL: DATA f.	DRAWINGS g.	INSTRUCTIONS h.	SCHEDULES i.	STATEMENTS j.	REPORTS k.	CERTIFICATES l.	SAMPLES m.	RECORDS n.	O&M MANUALS o.	CLASSIFICATION: INFORMATION ONLY p.	GOVERNMENT APPROVED q.	REVIEWER r.	CONTRACTOR SCHEDULE DATES: SUBMIT s.	APPROVAL NEEDED BY t.	MATERIAL NEEDED BY u.	CONTRACTOR ACTION: CODE v.	DATE w.	SUBMIT TO GOVERN-MENT x.	GOVERNMENT ACTION: CODE y.	DATE z.	REMARKS aa.
			2.1.2	Finishes	X										X		AR									
			2.2	Accessory Items	X										X		AR									
			2.1.2	Finishes								X				X	AR									
			2.2	Accessory Items								X				X	AR									

SUBMITTAL REGISTER
(ER 415 1-10)

CONTRACT NO.

TITLE AND LOCATION
Defense Security Service, Ft. Meade, MD

CONTRACTOR

SPECIFICATION SECTION
12320

ACTIVITY NO. a.	TRANS-MITTAL NO. b.	ITEM NO c.	SPECIFICATION PARAGRAPH NUMBER d.	DESCRIPTION OF ITEM SUBMITTED e.	TYPE OF SUBMITTAL: DATA f.	DRAWINGS g.	INSTRUCTIONS h.	SCHEDULES i.	STATEMENTS j.	REPORTS k.	CERTIFICATES l.	SAMPLES m.	RECORDS n.	O&M MANUALS o.	CLASSIFICATION: INFORMATION ONLY p.	GOVERNMENT APPROVED q.	REVIEWER r.	CONTRACTOR SCHEDULE DATES: SUBMIT s.	APPROVAL NEEDED BY t.	MATERIAL NEEDED BY u.	CONTRACTOR ACTION: CODE v.	DATE w.	SUBMIT TO GOVERN-MENT x.	GOVERNMENT ACTION: CODE y.	DATE z.	REMARKS aa.
			1.3	Cabinets and Countertops	X										X		AR									
			1.3	Cabinets and Countertops		X										X	ED									
			1.3	Cabinets and Countertops						X					X		AR									
			1.3	Cabinets and Countertops								X				X	AR									

SUBMITTAL REGISTER
(ER 415 1-10)

CONTRACT NO.

TITLE AND LOCATION
Defense Security Service, Ft. Meade, MD

CONTRACTOR

SPECIFICATION SECTION
12490

ACTIVITY NO. a.	TRANS-MITTAL NO. b.	ITEM NO c.	SPECIFICATION PARAGRAPH NUMBER d.	DESCRIPTION OF ITEM SUBMITTED e.	TYPE OF SUBMITTAL: DATA f.	DRAWINGS g.	INSTRUCTIONS h.	SCHEDULES i.	STATEMENTS j.	REPORTS k.	CERTIFICATES l.	SAMPLES m.	RECORDS n.	O&M MANUALS o.	CLASSIFICATION: INFORMATION ONLY p.	GOVERNMENT APPROVED q.	REVIEWER r.	CONTRACTOR SCHEDULE DATES: SUBMIT s.	APPROVAL NEEDED BY t.	MATERIAL NEEDED BY u.	CONTRACTOR ACTION: CODE v.	DATE w.	SUBMIT TO GOVERN-MENT x.	GOVERNMENT ACTION: CODE y.	DATE z.	REMARKS aa.
			2.1	Blinds	X											X	ED									
			2.1	Blinds												X	ED									
			1.2	Blind Details		X										X	ED									
			2.1	Blinds								X				X	ED									

SUBMITTAL REGISTER
(ER 415 1-10)

CONTRACT NO.

TITLE AND LOCATION
Defense Security Service, Ft. Meade, MD

CONTRACTOR

SPECIFICATION SECTION
13080

ACTIVITY NO. a.	TRANS-MITTAL NO. b.	ITEM NO c.	SPECIFICATION PARAGRAPH NUMBER d.	DESCRIPTION OF ITEM SUBMITTED e.	TYPE OF SUBMITTAL: DATA f.	DRAWINGS g.	INSTRUCTIONS h.	SCHEDULES i.	STATEMENTS j.	REPORTS k.	CERTIFICATES l.	SAMPLES m.	RECORDS n.	O&M MANUALS o.	CLASSIFICATION: INFORMATION ONLY p.	GOVERNMENT APPROVED q.	REVIEWER r.	CONTRACTOR SCHEDULE DATES: SUBMIT s.	APPROVAL NEEDED BY t.	MATERIAL NEEDED BY u.	CONTRACTOR ACTION: CODE v.	DATE w.	SUBMIT TO GOVERN-MENT x.	GOVERNMENT ACTION: CODE y.	DATE z.	REMARKS aa.
			3.4	Miscellaneous Equipment	X											X	ED									
			3.2	Resilient Vibration Isolation Devices		X										X	ED									
			3.4	Miscellaneous Equipment		X										X	ED									

SUBMITTAL REGISTER
(ER 415 1-10)

CONTRACT NO.

TITLE AND LOCATION
Defense Security Service, Ft. Meade, MD

CONTRACTOR

SPECIFICATION SECTION
13110

ACTIVITY NO. a.	TRANS-MITTAL NO. b.	ITEM NO c.	SPECIFICATION PARAGRAPH NUMBER d.	DESCRIPTION OF ITEM SUBMITTED e.	TYPE OF SUBMITTAL: DATA f.	DRAWINGS g.	INSTRUCTIONS h.	SCHEDULES i.	STATEMENTS j.	REPORTS k.	CERTIFICATES l.	SAMPLES m.	RECORDS n.	O&M MANUALS o.	CLASSIFICATION: INFORMATION ONLY p.	GOVERNMENT APPROVED q.	REVIEWER r.	CONTRACTOR SCHEDULE DATES: SUBMIT s.	APPROVAL NEEDED BY t.	MATERIAL NEEDED BY u.	CONTRACTOR ACTION: CODE v.	DATE w.	SUBMIT TO GOVERN-MENT x.	GOVERNMENT ACTION: CODE y.	DATE z.	REMARKS aa.
			1.3	Cathodic Protection System	X											X	ED									
			1.3	Qualifications	X										X		AO									
			1.3	Cathodic Protection System		X										X	ED									
			3.3	Tests and Measurements						X						X	ED									

SUBMITTAL REGISTER
(ER 415 1-10)

CONTRACT NO.

TITLE AND LOCATION
Defense Security Service, Ft. Meade, MD

CONTRACTOR

SPECIFICATION SECTION
13202

ACTIVITY NO. a.	TRANS-MITTAL NO. b.	ITEM NO c.	SPECIFICATION PARAGRAPH NUMBER d.	DESCRIPTION OF ITEM SUBMITTED e.	TYPE OF SUBMITTAL: DATA f.	DRAWINGS g.	INSTRUCTIONS h.	SCHEDULES i.	STATEMENTS j.	REPORTS k.	CERTIFICATES l.	SAMPLES m.	RECORDS n.	O&M MANUALS o.	CLASSIFICATION: INFORMATION ONLY p.	GOVERNMENT APPROVED q.	REVIEWER r.	CONTRACTOR SCHEDULE DATES: SUBMIT s.	APPROVAL NEEDED BY t.	MATERIAL NEEDED BY u.	CONTRACTOR ACTION: CODE v.	DATE w.	SUBMIT TO GOVERN-MENT x.	GOVERNMENT ACTION: CODE y.	DATE z.	REMARKS aa.
			1.3	Fueling System	X											X										
			1.5.1	Permitting	X										X		AR									
			1.5.2	Registration	X										X		AR									
			1.3	Spare Parts Data	X										X		AR									
			1.3	Fueling System		X										X	ED									
			1.3	Monitoring Systems		X										X	ED									
			3.1	Installation			X								X		AR									
			3.1.4	Framed Instructions			X								X		AR									
			1.3	Monitoring Systems			X								X		AR									
			3.2	Tests				X							X		AR									
			3.4	Demonstrations				X								X	ED									
			1.4.1	Experience					X						X		AR									
			1.4.2	Welding					X						X		AR									
			1.7.1	Verification of Dimensions					X						X		AR									
			1.7.2	Fuel Supply					X						X		AR									
			3.2	Tests						X						X	ED									
			1.3	Operation Manuals										X	X		AR									
			1.3	Maintenance Manuals										X	X		AR									

SUBMITTAL REGISTER
(ER 415 1-10)

CONTRACT NO.

TITLE AND LOCATION
Defense Security Service, Ft. Meade, MD

CONTRACTOR

SPECIFICATION SECTION
14240

ACTIVITY NO. a.	TRANS-MITTAL NO. b.	ITEM NO c.	SPECIFICATION PARAGRAPH NUMBER d.	DESCRIPTION OF ITEM SUBMITTED e.	TYPE OF SUBMITTAL: DATA f.	DRAWINGS g.	INSTRUCTIONS h.	SCHEDULES i.	STATEMENTS j.	REPORTS k.	CERTIFICATES l.	SAMPLES m.	RECORDS n.	O&M MANUALS o.	CLASSIFICATION: INFORMATION ONLY p.	GOVERNMENT APPROVED q.	REVIEWER r.	CONTRACTOR SCHEDULE DATES: SUBMIT s.	APPROVAL NEEDED BY t.	MATERIAL NEEDED BY u.	CONTRACTOR ACTION: CODE v.	DATE w.	SUBMIT TO GOVERN-MENT x.	GOVERNMENT ACTION: CODE y.	DATE z.	REMARKS aa.
			1.2	Training Data	X										X		AR									
			1.2	Elevator System	X										X		AR									
			1.2	Elevator System		X										X	ED									
			3.7	Framed Instructions			X									X	ED									
			1.2	Qualification Certificates					X						X		AR									
			3.6	Testing						X					X		AR									
			1.2	Finishes								X				X	ED									
			1.2	Test Procedures									X			X	ED									
			1.2	Elevator System										X		X	ED									

SUBMITTAL REGISTER
(ER 415 1-10)

CONTRACT NO.

TITLE AND LOCATION
Defense Security Service, Ft. Meade, MD

CONTRACTOR

SPECIFICATION SECTION
15052

ACTIVITY NO. a.	TRANS-MITTAL NO. b.	ITEM NO c.	SPECIFICATION PARAGRAPH NUMBER d.	DESCRIPTION OF ITEM SUBMITTED e.	TYPE OF SUBMITTAL: DATA f.	DRAWINGS g.	INSTRUCTIONS h.	SCHEDULES i.	STATEMENTS j.	REPORTS k.	CERTIFICATES l.	SAMPLES m.	RECORDS n.	O&M MANUALS o.	CLASSIFICATION: INFORMATION ONLY p.	GOVERNMENT APPROVED q.	REVIEWER r.	CONTRACTOR SCHEDULE DATES: SUBMIT s.	APPROVAL NEEDED BY t.	MATERIAL NEEDED BY u.	CONTRACTOR ACTION: CODE v.	DATE w.	SUBMIT TO GOVERN-MENT x.	GOVERNMENT ACTION: CODE y.	DATE z.	REMARKS aa.
			1.6	Qualifications	X										X		AR									
			1.5	Pressure Piping		X										X	ED									
			1.6	Qualifications							X				X		AR									
			3.1	Welding Operations									X		X		AR									

SUBMITTAL REGISTER
(ER 415 1-10)

CONTRACT NO.

TITLE AND LOCATION
Defense Security Service, Ft. Meade, MD

CONTRACTOR

SPECIFICATION SECTION
15080

ACTIVITY NO. a.	TRANS-MITTAL NO. b.	ITEM NO c.	SPECIFICATION PARAGRAPH NUMBER d.	DESCRIPTION OF ITEM SUBMITTED e.	TYPE OF SUBMITTAL: DATA f.	DRAWINGS g.	INSTRUCTIONS h.	SCHEDULES i.	STATEMENTS j.	REPORTS k.	CERTIFICATES l.	SAMPLES m.	RECORDS n.	O&M MANUALS o.	CLASSIFICATION: INFORMATION ONLY p.	GOVERNMENT APPROVED q.	REVIEWER r.	CONTRACTOR SCHEDULE DATES: SUBMIT s.	APPROVAL NEEDED BY t.	MATERIAL NEEDED BY u.	CONTRACTOR ACTION: CODE v.	DATE w.	SUBMIT TO GOVERN-MENT x.	GOVERNMENT ACTION: CODE y.	DATE z.	REMARKS aa.
			1.4	Thermal Insulation Materials								X			X		AR									

SUBMITTAL REGISTER
(ER 415 1-10)

CONTRACT NO.

TITLE AND LOCATION
Defense Security Service, Ft. Meade, MD

CONTRACTOR

SPECIFICATION SECTION
15330

ACTIVITY NO. a.	TRANS-MITTAL NO. b.	ITEM NO c.	SPECIFICATION PARAGRAPH NUMBER d.	DESCRIPTION OF ITEM SUBMITTED e.	TYPE OF SUBMITTAL: DATA f.	DRAWINGS g.	INSTRUCTIONS h.	SCHEDULES i.	STATEMENTS j.	REPORTS k.	CERTIFICATES l.	SAMPLES m.	RECORDS n.	O&M MANUALS o.	CLASSIFICATION: INFORMATION ONLY p.	GOVERNMENT APPROVED q.	REVIEWER r.	CONTRACTOR SCHEDULE DATES: SUBMIT s.	APPROVAL NEEDED BY t.	MATERIAL NEEDED BY u.	CONTRACTOR ACTION: CODE v.	DATE w.	SUBMIT TO GOVERN-MENT x.	GOVERNMENT ACTION: CODE y.	DATE z.	REMARKS aa.
			1.3	Sprinkler System Equipment	X											X	ED									
			1.4	Hydraulic Calculations	X											X	ED									
			1.3	Spare Parts	X											X	ED									
			1.3	Sprinkler System Shop Drawings		X										X	ED									
			1.3	As-Built Drawings		X										X	ED									
			1.3	Test Procedures			X									X	ED									
			1.3	Preliminary Tests				X								X	ED									
			1.3	Final Test				X								X	ED									
			1.6	Installer Qualifications					X							X	ED									
			1.5	Submittal Preparer's Qualifications					X							X	ED									
			1.3	Contractor's Material & Test							X					X	ED									
				Certificates																						
			1.3	Sprinkler System										X		X	ED									

SUBMITTAL REGISTER
(ER 415 1-10)

CONTRACT NO.

TITLE AND LOCATION
Defense Security Service, Ft. Meade, MD

CONTRACTOR

SPECIFICATION SECTION
15400

ACTIVITY NO. a.	TRANS-MITTAL NO. b.	ITEM NO c.	SPECIFICATION PARAGRAPH NUMBER d.	DESCRIPTION OF ITEM SUBMITTED e.	TYPE OF SUBMITTAL: DATA f.	DRAWINGS g.	INSTRUCTIONS h.	SCHEDULES i.	STATEMENTS j.	REPORTS k.	CERTIFICATES l.	SAMPLES m.	RECORDS n.	O&M MANUALS o.	CLASSIFICATION: INFORMATION ONLY p.	GOVERNMENT APPROVED q.	REVIEWER r.	CONTRACTOR SCHEDULE DATES: SUBMIT s.	APPROVAL NEEDED BY t.	MATERIAL NEEDED BY u.	CONTRACTOR ACTION: CODE v.	DATE w.	SUBMIT TO GOVERN-MENT x.	GOVERNMENT ACTION: CODE y.	DATE z.	REMARKS aa.
			1.4	Welding	X										X		AR									
			1.4	Plumbing System		X									X		AR									
			1.4	Electrical Schematics		X									X		AR									
			1.4	Plumbing System			X								X		AR									
			3.8	Tests, Flushing and Sterilization						X					X		AR									
			1.4	Backflow Prevention Assembly Tests						X					X		AR									
			1.4	Materials and Equipment							X				X		AR									
			1.4	Plumbing System										X	X		AR									

SUBMITTAL REGISTER
(ER 415 1-10)

CONTRACT NO.

TITLE AND LOCATION
Defense Security Service, Ft. Meade, MD

CONTRACTOR

SPECIFICATION SECTION
15401

ACTIVITY NO. a.	TRANS-MITTAL NO. b.	ITEM NO c.	SPECIFICATION PARAGRAPH NUMBER d.	DESCRIPTION OF ITEM SUBMITTED e.	TYPE OF SUBMITTAL: DATA f.	DRAWINGS g.	INSTRUCTIONS h.	SCHEDULES i.	STATEMENTS j.	REPORTS k.	CERTIFICATES l.	SAMPLES m.	RECORDS n.	O&M MANUALS o.	CLASSIFICATION: INFORMATION ONLY p.	GOVERNMENT APPROVED q.	REVIEWER r.	CONTRACTOR SCHEDULE DATES: SUBMIT s.	APPROVAL NEEDED BY t.	MATERIAL NEEDED BY u.	CONTRACTOR ACTION: CODE v.	DATE w.	SUBMIT TO GOVERN-MENT x.	GOVERNMENT ACTION: CODE y.	DATE z.	REMARKS aa.
			1.4	Performance Data	X											X	ED									
			1.4	Service Contract	X											X	ED									
			1.4	Spare Parts Data	X										X		AR									
			1.4	Shop Drawings		X										X	ED									
			1.4	Framed Instructions			X								X		AR									
			1.4	Training Schedule				X							X		AR									
			1.4	Operation Tests and Startup				X								X	ED									
			1.4	Guarantee					X						X		AR									
			1.4	Test Reports						X					X		AR									
			1.4	Operation and Startup Tests Reports						X						X	ED									
			1.4	Operation and Maintenance										X		X	ED									

SUBMITTAL REGISTER
(ER 415 1-10)

CONTRACT NO.

TITLE AND LOCATION
Defense Security Service, Ft. Meade, MD

CONTRACTOR

SPECIFICATION SECTION
15488

ACTIVITY NO. a.	TRANS-MITTAL NO. b.	ITEM NO c.	SPECIFICATION PARAGRAPH NUMBER d.	DESCRIPTION OF ITEM SUBMITTED e.	TYPE OF SUBMITTAL: DATA f.	DRAWINGS g.	INSTRUCTIONS h.	SCHEDULES i.	STATEMENTS j.	REPORTS k.	CERTIFICATES l.	SAMPLES m.	RECORDS n.	O&M MANUALS o.	CLASSIFICATION: INFORMATION ONLY p.	GOVERNMENT APPROVED q.	REVIEWER r.	CONTRACTOR SCHEDULE DATES: SUBMIT s.	APPROVAL NEEDED BY t.	MATERIAL NEEDED BY u.	CONTRACTOR ACTION: CODE v.	DATE w.	SUBMIT TO GOVERN-MENT x.	GOVERNMENT ACTION: CODE y.	DATE z.	REMARKS aa.
			1.3	Qualifications	X										X		AR									
			1.3	Gas Piping System		X									X		AR									

SUBMITTAL REGISTER
(ER 415 1-10)

CONTRACT NO.

TITLE AND LOCATION
Defense Security Service, Ft. Meade, MD

CONTRACTOR

SPECIFICATION SECTION
15569

ACTIVITY NO. a.	TRANS-MITTAL NO. b.	ITEM NO c.	SPECIFICATION PARAGRAPH NUMBER d.	DESCRIPTION OF ITEM SUBMITTED e.	TYPE OF SUBMITTAL: DATA f.	DRAWINGS g.	INSTRUCTIONS h.	SCHEDULES i.	STATEMENTS j.	REPORTS k.	CERTIFICATES l.	SAMPLES m.	RECORDS n.	O&M MANUALS o.	CLASSIFICATION: INFORMATION ONLY p.	GOVERNMENT APPROVED q.	REVIEWER r.	CONTRACTOR SCHEDULE DATES: SUBMIT s.	APPROVAL NEEDED BY t.	MATERIAL NEEDED BY u.	CONTRACTOR ACTION: CODE v.	DATE w.	SUBMIT TO GOVERN-MENT x.	GOVERNMENT ACTION: CODE y.	DATE z.	REMARKS aa.
			1.3	Manufacturer's Catalog Data	X											X	ED									
			1.3	Spare Parts Data	X										X		AR									
			1.3	Water Treatment Plan	X										X		AR									
			1.3	Heating and Fuel Systems Test	X										X		AR									
				Procedures																						
			1.3	Welding Procedures	X										X		AR									
			1.3	Qualification	X										X		AR									
			1.3	Welding Qualification	X										X		AR									
			1.3	Heating System		X										X	ED									
			1.3	Posted Instructions			X								X		AR									
			1.3	Tests				X							X		AR									
			1.3	Heating System and Fuel System						X						X	ED									
				Tests																						
			1.3	Water Treatment Tests						X					X		AR									
			1.3	Bolts							X				X		AR									
			1.3	Boiler Emissions							X				X		AR									
			1.3	Heating System										X	X		AR									
			1.3	Water Treatment System										X	X		AR									

SUBMITTAL REGISTER
(ER 415 1-10)

CONTRACT NO.

TITLE AND LOCATION
Defense Security Service, Ft. Meade, MD

CONTRACTOR

SPECIFICATION SECTION
15650

ACTIVITY NO. a.	TRANS-MITTAL NO. b.	ITEM NO c.	SPECIFICATION PARAGRAPH NUMBER d.	DESCRIPTION OF ITEM SUBMITTED e.	TYPE OF SUBMITTAL: DATA f.	DRAWINGS g.	INSTRUCTIONS h.	SCHEDULES i.	STATEMENTS j.	REPORTS k.	CERTIFICATES l.	SAMPLES m.	RECORDS n.	O&M MANUALS o.	CLASSIFICATION: INFORMATION ONLY p.	GOVERNMENT APPROVED q.	REVIEWER r.	CONTRACTOR SCHEDULE DATES: SUBMIT s.	APPROVAL NEEDED BY t.	MATERIAL NEEDED BY u.	CONTRACTOR ACTION: CODE v.	DATE w.	SUBMIT TO GOVERN-MENT x.	GOVERNMENT ACTION: CODE y.	DATE z.	REMARKS aa.
			1.3	Central Refrigerated Air-Conditioning	X											X	ED									
				System																						
			2.7	Water Treatment Systems	X											X	ED									
			1.3	Spare Parts	X										X		AR									
			1.4	Qualifications	X										X		AR									
			1.3	Central Refrigerated Air-Conditioning		X										X	ED									
				System																						
			1.3	Posted Instructions			X								X		AR									
			1.3	Factory Tests				X							X		AR									
			3.2	Tests				X							X		AR									
			3.5	Demonstrations				X							X		AR									
			1.7.1	Verification of Dimensions					X						X		AR									
			1.3	Factory Tests						X					X		AR									
			3.2.1	Field Tests						X					X		AR									
			3.2.2	System Performance Tests						X						X	ED									
			1.3	Central Refrigerated Air-Conditioning							X				X		AR									
				System																						
			1.3	Operation Manual										X	X		AR									
			1.3	Maintenance Manual										X	X		AR									
			1.3	Water Treatment System										X	X		AR									

SUBMITTAL REGISTER
(ER 415 1-10)

CONTRACT NO.

TITLE AND LOCATION
Defense Security Service, Ft. Meade, MD

CONTRACTOR

SPECIFICATION SECTION
15653

ACTIVITY NO. a.	TRANS-MITTAL NO. b.	ITEM NO c.	SPECIFICATION PARAGRAPH NUMBER d.	DESCRIPTION OF ITEM SUBMITTED e.	TYPE OF SUBMITTAL: DATA f.	DRAWINGS g.	INSTRUCTIONS h.	SCHEDULES i.	STATEMENTS j.	REPORTS k.	CERTIFICATES l.	SAMPLES m.	RECORDS n.	O&M MANUALS o.	CLASSIFICATION: INFORMATION ONLY p.	GOVERNMENT APPROVED q.	REVIEWER r.	CONTRACTOR SCHEDULE DATES: SUBMIT s.	APPROVAL NEEDED BY t.	MATERIAL NEEDED BY u.	CONTRACTOR ACTION: CODE v.	DATE w.	SUBMIT TO GOVERN-MENT x.	GOVERNMENT ACTION: CODE y.	DATE z.	REMARKS aa.
			1.2	Air-Conditioning	X											X	ED									
			1.2	Spare Parts Data	X										X		AR									
			1.2	Air-Conditioning		X										X	ED									
			3.1.20	Framed Instructions			X								X		AR									
			3.2	Tests				X							X		AR									
			3.5	Demonstrations				X								X	ED									
			1.3	Qualifications					X						X		AR									
			1.5.1	Verification of Dimensions					X						X		AR									
			3.2	Tests						X						X	ED									
			3.2.3	System Performance Tests						X						X	ED									
			1.2	Air-Conditioning							X				X		AR									
			1.2	Service Organizations							X				X		AR									
			1.2	Operation Manual										X	X		AR									
			1.2	Maintenance Manual										X	X		AR									

SUBMITTAL REGISTER
(ER 415 1-10)

CONTRACT NO.

TITLE AND LOCATION
Defense Security Service, Ft. Meade, MD

CONTRACTOR

SPECIFICATION SECTION
15895

ACTIVITY NO. a.	TRANS-MITTAL NO. b.	ITEM NO. c.	SPECIFICATION PARAGRAPH NUMBER d.	DESCRIPTION OF ITEM SUBMITTED e.	TYPE OF SUBMITTAL: DATA f.	DRAWINGS g.	INSTRUCTIONS h.	SCHEDULES i.	STATEMENTS j.	REPORTS k.	CERTIFICATES l.	SAMPLES m.	RECORDS n.	O&M MANUALS o.	CLASSIFICATION: INFORMATION ONLY p.	GOVERNMENT APPROVED q.	REVIEWER r.	CONTRACTOR SCHEDULE DATES: SUBMIT s.	APPROVAL NEEDED BY t.	MATERIAL NEEDED BY u.	CONTRACTOR ACTION: CODE v.	DATE w.	SUBMIT TO GOVERN-MENT x.	GOVERNMENT ACTION: CODE y.	DATE z.	REMARKS aa.
			1.4	Components and Equipment Data	X											X	ED									
			1.4	Air Supply, Distribution, Ventilation,		X										X	ED									
				and Exhaust Equipment																						
			1.4	Test Procedures			X								X		AR									
			1.4	Welding Procedures			X								X		AR									
			1.4	System Diagrams			X									X	ED									
			1.4	Test Schedules				X							X		AR									
			1.4	Field Training Schedule				X							X		AR									
			1.4	Similar Services					X						X		AR									
			1.4	Welding Qualification					X						X		AR									
			1.4	Test Reports						X					X		AR									
			1.4	Bolts							X				X		AR									
			1.4	Air Supply, Distribution, Ventilation,										X	X		AR									
				and Exhaust Manuals																						

SUBMITTAL REGISTER
(ER 415 1-10)

CONTRACT NO.

TITLE AND LOCATION
Defense Security Service, Ft. Meade, MD

CONTRACTOR

SPECIFICATION SECTION
15950

ACTIVITY NO. a.	TRANS-MITTAL NO. b.	ITEM NO c.	SPECIFICATION PARAGRAPH NUMBER d.	DESCRIPTION OF ITEM SUBMITTED e.	TYPE OF SUBMITTAL: DATA f.	DRAWINGS g.	INSTRUCTIONS h.	SCHEDULES i.	STATEMENTS j.	REPORTS k.	CERTIFICATES l.	SAMPLES m.	RECORDS n.	O&M MANUALS o.	CLASSIFICATION: INFORMATION ONLY p.	GOVERNMENT APPROVED q.	REVIEWER r.	CONTRACTOR SCHEDULE DATES: SUBMIT s.	APPROVAL NEEDED BY t.	MATERIAL NEEDED BY u.	CONTRACTOR ACTION: CODE v.	DATE w.	SUBMIT TO GOVERN-MENT x.	GOVERNMENT ACTION: CODE y.	DATE z.	REMARKS aa.
			1.3	Equipment Compliance Booklet	X											X	ED									
			1.3	HVAC Control System		X										X	ED									
			1.3	Commissioning Procedures					X						X		AR									
			1.3	Performance Verification Test					X						X		AR									
				Procedures																						
			1.3	Training Course Materials					X						X		AR									
			1.3	Commissioning Report						X					X		AR									
			1.3	Performance Verification Test Report						X					X		AR									
			2.17.11	Manufacturer's Recommendations						X					X		AR									
			1.3	ASME Air-Storage Tank Certificate							X				X		AR									
			1.3	Service Organizations									X		X		AR									
			1.3	Operation Manual										X	X		AR									
			1.3	Maintenance and Repair Manual										X	X		AR									

SUBMITTAL REGISTER
(ER 415 1-10)

CONTRACT NO.

TITLE AND LOCATION
Defense Security Service, Ft. Meade, MD

CONTRACTOR

SPECIFICATION SECTION
15990

ACTIVITY NO. a.	TRANS-MITTAL NO. b.	ITEM NO. c.	SPECIFICATION PARAGRAPH NUMBER d.	DESCRIPTION OF ITEM SUBMITTED e.	TYPE OF SUBMITTAL: DATA f.	DRAWINGS g.	INSTRUCTIONS h.	SCHEDULES i.	STATEMENTS j.	REPORTS k.	CERTIFICATES l.	SAMPLES m.	RECORDS n.	O&M MANUALS o.	CLASSIFICATION: INFORMATION ONLY p.	GOVERNMENT APPROVED q.	REVIEWER r.	CONTRACTOR SCHEDULE DATES: SUBMIT s.	APPROVAL NEEDED BY t.	MATERIAL NEEDED BY u.	CONTRACTOR ACTION: CODE v.	DATE w.	SUBMIT TO GOVERN-MENT x.	GOVERNMENT ACTION: CODE y.	DATE z.	REMARKS aa.
			1.2	TAB Related HVAC Submittals	X										X		AR									
			1.2	TAB Schematic Drawings and Report		X										X	ED									
				Forms																						
			1.2	TAB Procedures			X									X	ED									
			1.2	Systems Readiness Check				X							X		AR									
			1.2	TAB Execution				X								X	ED									
			1.2	TAB Verification				X								X	ED									
			1.2	TAB Firm					X							X	ED									
			1.2	TAB Specialist					X							X	ED									
			1.2	Instrument Calibration					X						X		AR									
			1.2	Design Review Report						X						X	ED									
			1.2	Systems Readiness Check Report						X						X	ED									
			1.2	TAB Report						X						X	ED									
			1.2	TAB Verification Report						X						X	ED									
			1.2	Ductwork Leak Testing							X				X		AR									

SUBMITTAL REGISTER
(ER 415 1-10)

CONTRACT NO.

TITLE AND LOCATION
Defense Security Service, Ft. Meade, MD

CONTRACTOR

SPECIFICATION SECTION
16115

ACTIVITY NO. a.	TRANS-MITTAL NO. b.	ITEM NO c.	SPECIFICATION PARAGRAPH NUMBER d.	DESCRIPTION OF ITEM SUBMITTED e.	TYPE OF SUBMITTAL: DATA f.	DRAWINGS g.	INSTRUCTIONS h.	SCHEDULES i.	STATEMENTS j.	REPORTS k.	CERTIFICATES l.	SAMPLES m.	RECORDS n.	O&M MANUALS o.	CLASSIFICATION: INFORMATION ONLY p.	GOVERNMENT APPROVED q.	REVIEWER r.	CONTRACTOR SCHEDULE DATES: SUBMIT s.	APPROVAL NEEDED BY t.	MATERIAL NEEDED BY u.	CONTRACTOR ACTION: CODE v.	DATE w.	SUBMIT TO GOVERN-MENT x.	GOVERNMENT ACTION: CODE y.	DATE z.	REMARKS aa.
			2.1	Components	X											X	ED									
			2.2	Raceway Cells	X											X	ED									
			1.2	Header Ducts	X											X	ED									
			2.3	Trench Ducts	X											X	ED									
			1.2	Service Outlet Fittings	X											X	ED									
			1.2	Underfloor Raceway System		X										X	ED									
			1.2	As-Built Drawings		X									X		AR									
			1.2	Underfloor Raceway System			X								X		AR									
			1.2	Equipment and Materials				X							X		AR									
			1.2	Service Outlet Fittings								X			X		AR									
			1.2	Underfloor Raceway System										X	X		AR									

SUBMITTAL REGISTER
(ER 415 1-10)

CONTRACT NO.

TITLE AND LOCATION
Defense Security Service, Ft. Meade, MD

CONTRACTOR

SPECIFICATION SECTION
16410

ACTIVITY NO. a.	TRANS-MITTAL NO. b.	ITEM NO c.	SPECIFICATION PARAGRAPH NUMBER d.	DESCRIPTION OF ITEM SUBMITTED e.	TYPE OF SUBMITTAL: DATA f.	DRAWINGS g.	INSTRUCTIONS h.	SCHEDULES i.	STATEMENTS j.	REPORTS k.	CERTIFICATES l.	SAMPLES m.	RECORDS n.	O&M MANUALS o.	CLASSIFICATION: INFORMATION ONLY p.	GOVERNMENT APPROVED q.	REVIEWER r.	CONTRACTOR SCHEDULE DATES: SUBMIT s.	APPROVAL NEEDED BY t.	MATERIAL NEEDED BY u.	CONTRACTOR ACTION: CODE v.	DATE w.	SUBMIT TO GOVERN-MENT x.	GOVERNMENT ACTION: CODE y.	DATE z.	REMARKS aa.
			1.3	Switches		X										X	ED									
			1.3	Material, Equipment, and Fixture				X								X	ED									
				Lists																						
			1.3	Tests						X					X											
			1.3	ARSD-						X																
			1.3	Equipment and Materials							X				X		AR									
			1.3	Switching Equipment							X				X		AR									

SUBMITTAL REGISTER
(ER 415 1-10)

CONTRACT NO.

TITLE AND LOCATION
Defense Security Service, Ft. Meade, MD

CONTRACTOR

SPECIFICATION SECTION
16415

ACTIVITY NO. a.	TRANS-MITTAL NO. b.	ITEM NO c.	SPECIFICATION PARAGRAPH NUMBER d.	DESCRIPTION OF ITEM SUBMITTED e.	TYPE OF SUBMITTAL: DATA f.	DRAWINGS g.	INSTRUCTIONS h.	SCHEDULES i.	STATEMENTS j.	REPORTS k.	CERTIFICATES l.	SAMPLES m.	RECORDS n.	O&M MANUALS o.	CLASSIFICATION: INFORMATION ONLY p.	GOVERNMENT APPROVED q.	REVIEWER r.	CONTRACTOR SCHEDULE DATES: SUBMIT s.	APPROVAL NEEDED BY t.	MATERIAL NEEDED BY u.	CONTRACTOR ACTION: CODE v.	DATE w.	SUBMIT TO GOVERN-MENT x.	GOVERNMENT ACTION: CODE y.	DATE z.	REMARKS aa.
			1.3	Fault Current and Protective Device	X											X	ED									
				Coordination Study																						
			1.3	Manufacturer's Catalog	X											X	ED									
			1.3	Material, Equipment, and Fixture	X											X	ED									
				Lists																						
			1.3	Installation Procedures	X										X		AR									
			1.3	Interior Electrical Equipment		X										X	ED									
			1.3	As-Built Drawings		X										X	ED									
			1.3	On-Site Test					X							X	ED									
			1.3	Factory Test Reports						X						X	ED									
			1.3	Field Test Plan						X						X	ED									
			1.3	Field Test Reports						X						X	ED									
			1.3	Materials and Equipment							X					X	ED									

SUBMITTAL REGISTER
(ER 415 1-10)

CONTRACT NO.

TITLE AND LOCATION
Defense Security Service, Ft. Meade, MD

CONTRACTOR

SPECIFICATION SECTION
16528

ACTIVITY NO. a.	TRANS-MITTAL NO. b.	ITEM NO c.	SPECIFICATION PARAGRAPH NUMBER d.	DESCRIPTION OF ITEM SUBMITTED e.	TYPE OF SUBMITTAL: DATA f.	DRAWINGS g.	INSTRUCTIONS h.	SCHEDULES i.	STATEMENTS j.	REPORTS k.	CERTIFICATES l.	SAMPLES m.	RECORDS n.	O&M MANUALS o.	CLASSIFICATION: INFORMATION ONLY p.	GOVERNMENT APPROVED q.	REVIEWER r.	CONTRACTOR SCHEDULE DATES: SUBMIT s.	APPROVAL NEEDED BY t.	MATERIAL NEEDED BY u.	CONTRACTOR ACTION: CODE v.	DATE w.	SUBMIT TO GOVERN-MENT x.	GOVERNMENT ACTION: CODE y.	DATE z.	REMARKS aa.
			1.4	Equipment and Materials	X											X	ED									
			1.4	Spare Parts	X										X		AR									
			1.4	Lighting System		X										X	ED									
			1.4	As-Built Drawings		X									X		AR									
			1.4	Operating Test						X						X	ED									
			1.4	Ground Resistance Measurements						X					X		AR									
			1.4	Lighting System										X	X		AR									

SUBMITTAL REGISTER
(ER 415 1-10)

CONTRACT NO.

TITLE AND LOCATION
Defense Security Service, Ft. Meade, MD

CONTRACTOR

SPECIFICATION SECTION
16610

ACTIVITY NO. a.	TRANS-MITTAL NO. b.	ITEM NO c.	SPECIFICATION PARAGRAPH NUMBER d.	DESCRIPTION OF ITEM SUBMITTED e.	TYPE OF SUBMITTAL: DATA f.	DRAWINGS g.	INSTRUCTIONS h.	SCHEDULES i.	STATEMENTS j.	REPORTS k.	CERTIFICATES l.	SAMPLES m.	RECORDS n.	O&M MANUALS o.	CLASSIFICATION: INFORMATION ONLY p.	GOVERNMENT APPROVED q.	REVIEWER r.	CONTRACTOR SCHEDULE DATES: SUBMIT s.	APPROVAL NEEDED BY t.	MATERIAL NEEDED BY u.	CONTRACTOR ACTION: CODE v.	DATE w.	SUBMIT TO GOVERN-MENT x.	GOVERNMENT ACTION: CODE y.	DATE z.	REMARKS aa.
			1.3	UPS System Performance Data	X											X	ED									
				Sheets																						
			1.3	UPS System		X									X		AR									
			1.3	Field Tests						X					X		AR									

SUBMITTAL REGISTER
(ER 415 1-10)

CONTRACT NO.

TITLE AND LOCATION
Defense Security Service, Ft. Meade, MD

CONTRACTOR

SPECIFICATION SECTION
16670

ACTIVITY NO. a.	TRANS-MITTAL NO. b.	ITEM NO c.	SPECIFICATION PARAGRAPH NUMBER d.	DESCRIPTION OF ITEM SUBMITTED e.	TYPE OF SUBMITTAL: DATA f.	DRAWINGS g.	INSTRUCTIONS h.	SCHEDULES i.	STATEMENTS j.	REPORTS k.	CERTIFICATES l.	SAMPLES m.	RECORDS n.	O&M MANUALS o.	CLASSIFICATION: INFORMATION ONLY p.	GOVERNMENT APPROVED q.	REVIEWER r.	CONTRACTOR SCHEDULE DATES: SUBMIT s.	APPROVAL NEEDED BY t.	MATERIAL NEEDED BY u.	CONTRACTOR ACTION: CODE v.	DATE w.	SUBMIT TO GOVERN-MENT x.	GOVERNMENT ACTION: CODE y.	DATE z.	REMARKS aa.
			1.3	Lightning Protection System		X										X	ED									
			1.3	Materials and Equipment							X					X	ED									

SUBMITTAL REGISTER
(ER 415 1-10)

CONTRACT NO.

TITLE AND LOCATION
Defense Security Service, Ft. Meade, MD

CONTRACTOR

SPECIFICATION SECTION
16710

ACTIVITY NO. a.	TRANS-MITTAL NO. b.	ITEM NO c.	SPECIFICATION PARAGRAPH NUMBER d.	DESCRIPTION OF ITEM SUBMITTED e.	TYPE OF SUBMITTAL: DATA f.	DRAWINGS g.	INSTRUCTIONS h.	SCHEDULES i.	STATEMENTS j.	REPORTS k.	CERTIFICATES l.	SAMPLES m.	RECORDS n.	O&M MANUALS o.	CLASSIFICATION: INFORMATION ONLY p.	GOVERNMENT APPROVED q.	REVIEWER r.	CONTRACTOR SCHEDULE DATES: SUBMIT s.	APPROVAL NEEDED BY t.	MATERIAL NEEDED BY u.	CONTRACTOR ACTION: CODE v.	DATE w.	SUBMIT TO GOVERN-MENT x.	GOVERNMENT ACTION: CODE y.	DATE z.	REMARKS aa.
			1.5	Spare Parts	X										X		AR									
			1.5	Premises Distribution System		X										X	AR									
			1.5	Record Drawings		X										X	AR									
			1.5	Manufacturer's Recommendations			X									X	AR									
			1.5	Test Plan					X							X	AR									
			1.4	Qualifications					X							X	AR									
			1.5	Test Reports						X						X	AR									
			1.5	Premises Distribution System							X					X	AR									
			2.1	Materials and Equipment							X				X		AR									
			1.5	Installers							X					X	AR									
			1.8	Record Keeping and Documentation									X			X	AR									

SUBMITTAL REGISTER
(ER 415 1-10)

CONTRACT NO.

TITLE AND LOCATION
Defense Security Service, Ft. Meade, MD

CONTRACTOR

SPECIFICATION SECTION
16711

ACTIVITY NO. a.	TRANS-MITTAL NO. b.	ITEM NO c.	SPECIFICATION PARAGRAPH NUMBER d.	DESCRIPTION OF ITEM SUBMITTED e.	TYPE OF SUBMITTAL: DATA f.	DRAWINGS g.	INSTRUCTIONS h.	SCHEDULES i.	STATEMENTS j.	REPORTS k.	CERTIFICATES l.	SAMPLES m.	RECORDS n.	O&M MANUALS o.	CLASSIFICATION: INFORMATION ONLY p.	GOVERNMENT APPROVED q.	REVIEWER r.	CONTRACTOR SCHEDULE DATES: SUBMIT s.	APPROVAL NEEDED BY t.	MATERIAL NEEDED BY u.	CONTRACTOR ACTION: CODE v.	DATE w.	SUBMIT TO GOVERN-MENT x.	GOVERNMENT ACTION: CODE y.	DATE z.	REMARKS aa.
			1.4	Spare Parts and Equipment List	X										X		AR									
			1.4	Telephone System		X										X	AR									
			1.4	Record Drawings		X										X	AR									
			3.1	Installation			X									X	AR									
			3.5	Acceptance Tests					X							X	AR									
			3.4	Cutover and Records					X							X	AR									
			3.5	Acceptance Tests						X						X	AR									
			1.4	Telephone System							X				X		AR									
			1.3	Qualifications							X					X	AR									

SUBMITTAL REGISTER
(ER 415 1-10)

CONTRACT NO.

TITLE AND LOCATION
Defense Security Service, Ft. Meade, MD

CONTRACTOR

SPECIFICATION SECTION
16721

ACTIVITY NO. a.	TRANS-MITTAL NO. b.	ITEM NO c.	SPECIFICATION PARAGRAPH NUMBER d.	DESCRIPTION OF ITEM SUBMITTED e.	TYPE OF SUBMITTAL: DATA f.	DRAWINGS g.	INSTRUCTIONS h.	SCHEDULES i.	STATEMENTS j.	REPORTS k.	CERTIFICATES l.	SAMPLES m.	RECORDS n.	O&M MANUALS o.	CLASSIFICATION: INFORMATION ONLY p.	GOVERNMENT APPROVED q.	REVIEWER r.	CONTRACTOR SCHEDULE DATES: SUBMIT s.	APPROVAL NEEDED BY t.	MATERIAL NEEDED BY u.	CONTRACTOR ACTION: CODE v.	DATE w.	SUBMIT TO GOVERN-MENT x.	GOVERNMENT ACTION: CODE y.	DATE z.	REMARKS aa.
			1.4	Battery	X											X	FPE									
			1.4	Voltage Drop	X											X	FPE									
			1.4	Qualifications	X										X		AR									
			1.4	Fire Alarm System		X										X	FPE									
			1.4	Fire Alarm System			X									X	FPE									
			1.4	Training			X								X		AR									
			1.4	Equipment							X					X	FPE									
			1.4	Installer							X				X		AR									
			1.4	Warranty							X				X		AR									

SUBMITTAL REGISTER
(ER 415 1-10)

CONTRACT NO.

TITLE AND LOCATION
Defense Security Service, Ft. Meade, MD

CONTRACTOR

SPECIFICATION SECTION
16760

ACTIVITY NO. a.	TRANS-MITTAL NO. b.	ITEM NO c.	SPECIFICATION PARAGRAPH NUMBER d.	DESCRIPTION OF ITEM SUBMITTED e.	TYPE OF SUBMITTAL: DATA f.	DRAWINGS g.	INSTRUCTIONS h.	SCHEDULES i.	STATEMENTS j.	REPORTS k.	CERTIFICATES l.	SAMPLES m.	RECORDS n.	O&M MANUALS o.	CLASSIFICATION: INFORMATION ONLY p.	GOVERNMENT APPROVED q.	REVIEWER r.	CONTRACTOR SCHEDULE DATES: SUBMIT s.	APPROVAL NEEDED BY t.	MATERIAL NEEDED BY u.	CONTRACTOR ACTION: CODE v.	DATE w.	SUBMIT TO GOVERN-MENT x.	GOVERNMENT ACTION: CODE y.	DATE z.	REMARKS aa.
			1.3	Spare Parts	X										X		AR									
			1.3	Intercommunication System		X									X		AR									
			1.3	Test Plan and Procedures						X					X		AR									
			3.3	Acceptance Tests						X						X	ED									
			1.3	Intercommunication System										X	X		AR									

SUBMITTAL REGISTER
(ER 415 1-10)

CONTRACT NO.

TITLE AND LOCATION
Defense Security Service, Ft. Meade, MD

CONTRACTOR

SPECIFICATION SECTION
16794

ACTIVITY NO. a.	TRANS-MITTAL NO. b.	ITEM NO c.	SPECIFICATION PARAGRAPH NUMBER d.	DESCRIPTION OF ITEM SUBMITTED e.	TYPE OF SUBMITTAL: DATA f.	DRAWINGS g.	INSTRUCTIONS h.	SCHEDULES i.	STATEMENTS j.	REPORTS k.	CERTIFICATES l.	SAMPLES m.	RECORDS n.	O&M MANUALS o.	CLASSIFICATION: INFORMATION ONLY p.	GOVERNMENT APPROVED q.	REVIEWER r.	CONTRACTOR SCHEDULE DATES: SUBMIT s.	APPROVAL NEEDED BY t.	MATERIAL NEEDED BY u.	CONTRACTOR ACTION: CODE v.	DATE w.	SUBMIT TO GOVERN-MENT x.	GOVERNMENT ACTION: CODE y.	DATE z.	REMARKS aa.
			1.4	Manufacturers' Data	X											X	ED									
			1.4	Data Transmission Media	X										X		AR									
				Descriptions and Analyses																						

SECTION 01415

METRIC MEASUREMENTS

1.1 REFERENCES

The publications listed below form a part of this specification to the extent referenced. The publications are referred to in the text by basic designation only.

AMERICAN SOCIETY FOR TESTING AND MATERIALS (ASTM)

ASTM E 380	(1993) Practice for Use of the International System of Units (SI)
ASTM E 621	(1994) Practice for Use of Metric (SI) Units in Building Design and Construction

1.2 GENERAL

This project includes metric units of measurements. The metric units used are the International System of Units (SI) developed and maintained by the General Conference on Weights and Measures (CGPM); the name International System of Units and the international abbreviation SI were adopted by the 11th CGPM in 1960. A number of circumstances require that both metric SI units and English inch-pound (I-P) units be included in a section of the specifications. When both metric and I-P measurements are included, the section may contain measurements for products that are manufactured to I-P dimensions and then expressed in mathematically converted metric value (soft metric) or, it may contain measurements for products that are manufactured to an industry recognized rounded metric (hard metric) dimensions but are allowed to be substituted by I-P products to comply with the law. Dual measurements are also included to indicate industry and/or Government standards, test values or other controlling factors, such as the code requirements where I-P values are needed for clarity or to trace back to the referenced standards, test values or codes.

1.3 USE OF MEASUREMENTS

Measurements shall be either in SI or I-P units as indicated, except for soft metric measurements or as otherwise authorized. The Contractor shall be responsible for all associated labor and materials when authorized to substitute one system of units for another and for the final assembly and performance of the specified work and/or products.

1.3.1 Hard Metric

A hard metric measurement is indicated by an SI value with no expressed correlation to an I-P value, i.e., where an SI value is not an exact mathematical conversion of an I-P value, such as the use of 100 mm in lieu of 4 inches. Hard metric measurements are often used for field data such as distance from one point to another or distance above the floor. Products are considered to be hard metric when they are manufactured to metric dimensions or have an industry recognized metric designation.

1.3.2 Soft Metric

a. A soft metric measurement is indicated by an SI value which is a mathematical conversion of the I-P value shown in parentheses (e.g. 38.1 mm (1-1/2 inches)). Soft metric measurements are used for measurements pertaining to products, test values, and other situations where the I-P units are the standard for manufacture, verification, or other controlling factor. The I-P value shall govern while the metric measurement is provided for information.

b. A soft metric measurement is also indicated for products that are manufactured in industry designated metric dimensions but are required by law to allow substitute I-P products. These measurements are indicated by a manufacturing hard metric product dimension followed by the substitute I-P equivalent value in parentheses (e.g., 190 x 190 x 390 mm (7-5/8 x 7-5/8 x 15-5/8 inches)).

1.3.3 Neutral

A neutral measurement is indicated by an identifier which has no expressed relation to either an SI or an I-P value (e.g., American Wire Gage (AWG) which indicates thickness but in itself is neither SI nor I-P).

1.4 COORDINATION

Discrepancies, such as mismatches or product unavailability, arising from use of both metric and non-metric measurements and discrepancies between the measurements in the specifications and the measurements in the drawings shall be brought to the attention of the Contracting Officer for resolution.

1.5 RELATIONSHIP TO SUBMITTALS

Submittals for Government approval or for information only shall cover the SI or I-P products actually being furnished for the project. The Contractor shall submit the required drawings and calculations in the same units used in the contract documents describing the product or requirement unless otherwise instructed or approved. The Contractor shall use ASTM E 380 and ASTM E 621 as the basis for establishing metric measurements required to be used in submittals.

-- End of Section --

SECTION 01451

CONTRACTOR QUALITY CONTROL

PART 1 GENERAL

1.1 REFERENCES

The publications listed below form a part of this specification to the extent referenced. The publications are referred to in the text by basic designation only.

AMERICAN SOCIETY FOR TESTING AND MATERIALS (ASTM)

ASTM D 3740	(1994a) Minimum Requirements for Agencies Engaged in the Testing and/or Inspection of Soil and Rock as Used in Engineering Design and Construction
ASTM E 329	(1995b) Agencies Engaged in the Testing and/or Inspection of Materials Used in Construction

1.2 PAYMENT

Separate payment will not be made for providing and maintaining an effective Quality Control program, and all costs associated therewith shall be included in the applicable unit prices or lump-sum prices contained in the Bidding Schedule.

1.3 SUBMITTALS

Government approval is required for submittals with a "GA" designation; submittals having an "FIO" designation are for information only. The following shall be submitted in accordance with Section 01330 SUBMITTAL PROCEDURES:

SD-01 Data

CQC Plan; GA|AR.

Identifies personnel, procedures, control, instructions, test, records, and forms to be used.

SD-06 Instructions

CQC Plan; GA|AR.

Identifies personnel, procedures, control, instructions, test, records, and forms to be used.

SD-07 Schedules

CQC Plan; GA|AR.

Identifies personnel, procedures, control, instructions, test, records, and

forms to be used.

SD-08 Statements

Change Notification; FIO;AR.

Any changes made by the Contractor.

Phase Notification; FIO;AR.

The Government shall be notified in a specified amount of time in advance of beginning the preparatory control phase.

Punchlist; FIO;AR.

Near the completion of all work, the CQC System Manager shall prepare a list of items which do not conform to the approved drawings and specifications.

SD-09 Reports

CQC Plan; GA|AR.

Identifies personnel, procedures, control, instructions, test, records, and forms to be used..

Request; GA|AR.

The requesting of specialized individuals in specific disciplines to perform quality control.

Tests; FIO;AR.

Specified or required tests shall be done by the Contractor to verify that control measures are adequate.

Test Reports; FIO;AR.

Results of tests taken..

SD-13 Certification

CQC Plan; GA|AR.

Identifies personnel, procedures, control, instructions, test, records, and forms to be used..

CQC Mgr Qualification; GA|AR.

The evaluation of the project to determine the level of CQC System Manager required.

SD-14 Samples

CQC Mgr Qualification; GA|AR.

The evaluation of the project to determine the level of CQC System Manager required.

SD-18 Records

CQC Plan; GA|AR.

Identifies personnel, procedures, control, instructions, test, records, and forms to be used..

Minutes; FIO;AR.

Prepared by the Government and signed by both the Contractor and the Contracting Officer and shall become a part of the contract file.

CQC Mgr Qualification; FIO;AR.

The evaluation of the project to determine the level of CQC System Manager required.

Tests Performed; FIO;AR.

An information copy provided directly to the Contracting Officer.

QC Records; GA|AR.

Provid factual evidence that required quality control activities and/or tests have been performed.

PART 2 PRODUCTS (Not Applicable)

PART 3 EXECUTION

3.1 GENERAL

The Contractor is responsible for quality control and shall establish and maintain an effective quality control system in compliance with the Contract Clause titled "Inspection of Construction." The quality control system shall consist of plans, procedures, and organization necessary to produce an end product which complies with the contract requirements. The system shall cover all construction operations, both onsite and offsite, and shall be keyed to the proposed construction sequence. The project superintendent will be held responsible for the quality of work on the job and is subject to removal by the Contracting Officer for non-compliance with quality requirements specified in the contract. The project superintendent in this context shall mean the individual with the responsibility for the overall management of the project including quality and production.

3.2 CQC PLAN

3.2.1 General

The Contractor shall furnish for review by the Government, not later than 30 days after receipt of notice to proceed, the Contractor Quality Control (CQC) Plan proposed to implement the requirements of the Contract Clause titled "Inspection of Construction." The plan shall identify personnel, procedures, control, instructions, test, records, and forms to be used. The Government will consider an interim plan for the first 60 days of operation. Construction will be permitted to begin only after acceptance of the CQC Plan or acceptance of an interim plan applicable to the particular feature of work to be started. Work outside of the features of

work included in an accepted interim plan will not be permitted to begin until acceptance of a CQC Plan or another interim plan containing the additional features of work to be started.

3.2.2 Content of the CQC Plan

The CQC Plan shall include, as a minimum, the following to cover all construction operations, both onsite and offsite, including work by subcontractors, fabricators, suppliers, and purchasing agents:

a. A description of the quality control organization, including a chart showing lines of authority and acknowledgment that the CQC staff shall implement the three phase control system for all aspects of the work specified. The staff shall include a CQC System Manager who shall report to the project superintendent.

b. The name, qualifications (in resume format), duties, responsibilities, and authorities of each person assigned a CQC function.

c. A copy of the letter to the CQC System Manager signed by an authorized official of the firm which describes the responsibilities and delegates sufficient authorities to adequately perform the functions of the CQC System Manager, including authority to stop work which is not in compliance with the contract. The CQC System Manager shall issue letters of direction to all other various quality control representatives outlining duties, authorities, and responsibilities. Copies of these letters shall also be furnished to the Government.

d. Procedures for scheduling, reviewing, certifying, and managing submittals, including those of subcontractors, offsite fabricators, suppliers, and purchasing agents. These procedures shall be in accordance with Section 01330 SUBMITTAL PROCEDURES.

e. Control, verification, and acceptance testing procedures for each specific test to include the test name, specification paragraph requiring test, feature of work to be tested, test frequency, and person responsible for each test. (Laboratory facilities will be approved by the Contracting Officer.)

f. Procedures for tracking preparatory, initial, and follow-up control phases and control, verification, and acceptance tests including documentation.

g. Procedures for tracking construction deficiencies from identification through acceptable corrective action. These procedures shall establish verification that identified deficiencies have been corrected.

h. Reporting procedures, including proposed reporting formats.

i. A list of the definable features of work. A definable feature of work is a task which is separate and distinct from other tasks, has separate control requirements, and may be identified by different trades or disciplines, or it may be work by the same trade in a different environment. Although each section of the specifications may generally be considered as a definable feature of work, there are frequently more than one definable features

under a particular section. This list will be agreed upon during the coordination meeting.

3.2.3 Acceptance of Plan

Acceptance of the Contractor's plan is required prior to the start of construction. Acceptance is conditional and will be predicated on satisfactory performance during the construction. The Government reserves the right to require the Contractor to make changes in his CQC Plan and operations including removal of personnel, as necessary, to obtain the quality specified.

3.2.4 Notification of Changes

After acceptance of the CQC Plan, the Contractor shall notify the Contracting Officer in writing of any proposed change. Proposed changes are subject to acceptance by the Contracting Officer.

3.3 COORDINATION MEETING

After the Preconstruction Conference, before start of construction, and prior to acceptance by the Government of the CQC Plan, the Contractor shall meet with the Contracting Officer or Authorized Representative and discuss the Contractor's quality control system. The CQC Plan shall be submitted for review a minimum of 14 calendar days prior to the Coordination Meeting. During the meeting, a mutual understanding of the system details shall be developed, including the forms for recording the CQC operations, control activities, testing, administration of the system for both onsite and offsite work, and the interrelationship of Contractor's Management and control with the Government's Quality Assurance. Minutes of the meeting shall be prepared by the Government and signed by both the Contractor and the Contracting Officer. The minutes shall become a part of the contract file. There may be occasions when subsequent conferences will be called by either party to reconfirm mutual understandings and/or address deficiencies in the CQC system or procedures which may require corrective action by the Contractor.

3.4 QUALITY CONTROL ORGANIZATION

3.4.1 General

The requirements for the CQC organization are a CQC System Manager and sufficient number of additional qualified personnel to ensure contract compliance. The Contractor shall provide a CQC organization which shall be at the site at all times during progress of the work and with complete authority to take any action necessary to ensure compliance with the contract. All CQC staff members shall be subject to acceptance by the Contracting Officer.

3.4.2 CQC System Manager

The Contractor shall identify as CQC System Manager an individual within the onsite work organization who shall be responsible for overall management of CQC and have the authority to act in all CQC matters for the Contractor. The CQC System Manager shall be a construction person with a minimum of 10 years in related work. This CQC System Manager shall be on the site at all times during construction and shall be employed by the prime Contractor. The CQC System Manager shall be assigned no other duties. An alternate for the CQC System Manager shall be identified in the

plan to serve in the event of the System Manager's absence. The requirements for the alternate shall be the same as for the designated CQC System Manager.

3.4.3 CQC Personnel

In addition to CQC personnel specified elsewhere in the contract, the Contractor shall provide as part of the CQC organization specialized personnel to assist the CQC System Manager for the following areas: electrical, mechanical, civil, structural, environmental, architectural, materials technician,. These individuals shall be directly employed by the prime Contractor; be responsible to the CQC System Manager; be physically present at the construction site during work on their areas of responsibility; have the necessary education and/or experience in accordance with the experience matrix listed herein. These individuals shall have no other duties other than quality control.

Experience Matrix

Area	Qualifications
a. Civil	Graduate Civil Engineer with 2 years experience in the type of work being performed on this project or technician with 5 yrs related experience
b. Mechanical	Graduate Mechanical Engineer with 2 yrs experience or person with 5 yrs related experience
c. Electrical	Graduate Electrical Engineer with 2 yrs related experience or person with 5 yrs related experience
d. Structural	Graduate Structural Engineer with 2 yrs experience or person with 5 yrs related experience
e. Architectural	Graduate Architect with 2 yrs experience or person with 5 yrs related experience
f. Environmental	Graduate Environmental Engineer with 3 yrs experience
g. Concrete, Pavements and Soils	Materials Technician with 2 yrs experience for the appropriate area

3.4.4 Additional Requirement

The Contractor's Quality Control System Manager (CQCSM) is required to

successfully complete the Corps of Engineers Construction Quality Management Course (CECQMC). Successful completion of the CECQMC within ninety (90) calendar days after NTP is a mandatory requirement for the position of the Quality Control System Manager. Certification is good for five (5) years at which time retraining is required. The Contractor's QC Systems Manager may be appointed and serve fully in that capacity pending certification. If the CQC Systems Manager fails to successfully complete the training, the Contractor should promptly appoint a new CQCSM who shall then attend the next available course. The course is twelve (12) hours (1½ days) in length. The Construction Quality Management Course (CQMC) will be taught at least six (6) times per year at the Baltimore District Corps of Engineers, City Crescent Building, 10 South Howard Street, Baltimore, MD, or at another site if conditions warrant. The CQMC cost shall be borne by the Contractor and will not exceed one hundred dollars ($100.00) per course, per person. For additional information call (410) 962-2323. Payment will be by check made payable to F&A Officer of the Corps of Engineers at or prior to the start of the course. The Contractor has ninety (90) calendar days to attend the course after the issuance of the NTP. The Contractor shall contact the Contracting Officer upon award of the contract for arrangements for the course.

3.4.5 Organizational Changes

The Contractor shall maintain the CQC staff at full strength at all times. When it is necessary to make changes to the CQC staff, the Contractor shall revise the CQC Plan to reflect the changes and submit the changes to the Contracting Officer for acceptance.

3.5 SUBMITTALS

Submittals shall be made as specified in Section 01330 SUBMITTAL PROCEDURES. The CQC organization shall be responsible for certifying that all submittals are in compliance with the contract requirements.

3.6 CONTROL

Contractor Quality Control is the means by which the Contractor ensures that the construction, to include that of subcontractors and suppliers, complies with the requirements of the contract. At least three phases of control shall be conducted by the CQC System Manager for each definable feature of work as follows:

3.6.1 Preparatory Phase

This phase shall be performed prior to beginning work on each definable feature of work, after all required plans/documents/materials are approved/accepted, and after copies are at the work site. This phase shall include:

a. A review of each paragraph of applicable specifications.

b. A review of the contract drawings.

c. A check to assure that all materials and/or equipment have been tested, submitted, and approved.

d. Review of provisions that have been made to provide required control inspection and testing.

e. Examination of the work area to assure that all required preliminary work has been completed and is in compliance with the contract.

f. A physical examination of required materials, equipment, and sample work to assure that they are on hand, conform to approved shop drawings or submitted data, and are properly stored.

g. A review of the appropriate activity hazard analysis to assure safety requirements are met.

h. Discussion of procedures for controlling quality of the work including repetitive deficiencies. Document construction tolerances and workmanship standards for that feature of work.

i. A check to ensure that the portion of the plan for the work to be performed has been accepted by the Contracting Officer.

j. Discussion of the initial control phase.

k. The Government shall be notified at least 72 hours in advance of beginning the preparatory control phase. This phase shall include a meeting conducted by the CQC System Manager and attended by the superintendent, other CQC personnel (as applicable), and the foreman responsible for the definable feature. The results of the preparatory phase actions shall be documented by separate minutes prepared by the CQC System Manager and attached to the daily CQC report. The Contractor shall instruct applicable workers as to the acceptable level of workmanship required in order to meet contract specifications.

3.6.2 Initial Phase

This phase shall be accomplished at the beginning of a definable feature of work. The following shall be accomplished:

a. A check of work to ensure that it is in full compliance with contract requirements. Review minutes of the preparatory meeting.

b. Verify adequacy of controls to ensure full contract compliance. Verify required control inspection and testing.

c. Establish level of workmanship and verify that it meets minimum acceptable workmanship standards. Compare with required sample panels as appropriate.

d. Resolve all differences.

e. Check safety to include compliance with and upgrading of the safety plan and activity hazard analysis. Review the activity analysis with each worker.

f. The Government shall be notified at least 72 hours in advance of beginning the initial phase. Separate minutes of this phase shall be prepared by the CQC System Manager and attached to the daily CQC report. Exact location of initial phase shall be indicated for future reference and comparison with follow-up phases.

g. The initial phase should be repeated for each new crew to work

onsite, or any time acceptable specified quality standards are not being met.

3.6.3 Follow-up Phase

Daily checks shall be performed to assure control activities, including control testing, are providing continued compliance with contract requirements, until completion of the particular feature of work. The checks shall be made a matter of record in the CQC documentation. Final follow-up checks shall be conducted and all deficiencies corrected prior to the start of additional features of work which may be affected by the deficient work. The Contractor shall not build upon nor conceal non-conforming work.

3.6.4 Additional Preparatory and Initial Phases

Additional preparatory and initial phases shall be conducted on the same definable features of work if the quality of on-going work is unacceptable, if there are changes in the applicable CQC staff, onsite production supervision or work crew, if work on a definable feature is resumed after a substantial period of inactivity, or if other problems develop.

3.7 TESTS

3.7.1 Testing Procedure

The Contractor shall perform specified or required tests to verify that control measures are adequate to provide a product which conforms to contract requirements. Upon request, the Contractor shall furnish to the Government duplicate samples of test specimens for possible testing by the Government. Testing includes operation and/or acceptance tests when specified. The Contractor shall procure the services of a Corps of Engineers approved testing laboratory or establish an approved testing laboratory at the project site. The Contractor shall perform the following activities and record and provide the following data:

a. Verify that testing procedures comply with contract requirements.

b. Verify that facilities and testing equipment are available and comply with testing standards.

c. Check test instrument calibration data against certified standards.

d. Verify that recording forms and test identification control number system, including all of the test documentation requirements, have been prepared.

e. Results of all tests taken, both passing and failing tests, shall be recorded on the CQC report for the date taken. Specification paragraph reference, location where tests were taken, and the sequential control number identifying the test shall be given. If approved by the Contracting Officer, actual test reports may be submitted later with a reference to the test number and date taken. An information copy of tests performed by an offsite or commercial test facility shall be provided directly to the Contracting Officer. Failure to submit timely test reports as stated may result in nonpayment for related work performed and disapproval of the test facility for this contract.

3.7.2 Testing Laboratories

3.7.2.1 Capability Check

The Government reserves the right to check laboratory equipment in the proposed laboratory for compliance with the standards set forth in the contract specifications and to check the laboratory technician's testing procedures and techniques. Laboratories utilized for testing soils, concrete, asphalt, and steel shall meet criteria detailed in ASTM D 3740 and ASTM E 329.

3.7.2.2 Capability Recheck

If the selected laboratory fails the capability check, the Contractor will be assessed a charge of $1,500.00 to reimburse the Government for each succeeding recheck of the laboratory or the checking of a subsequently selected laboratory. Such costs will be deducted from the contract amount due the Contractor.

3.7.3 Onsite Laboratory

The Government reserves the right to utilize the Contractor's control testing laboratory and equipment to make assurance tests and to check the Contractor's testing procedures, techniques, and test results at no additional cost to the Government.

3.7.4 Furnishing or Transportation of Samples for Testing

Furnishing or Transportation of Samples for Testing: Costs incidental to the transportation of samples or materials will be borne by the Contractor. Samples of materials for test verification and acceptance testing by the Government shall be delivered to the following address:

Field Exploration Unit
or
Soils Laboratory Unit
(indicate which on shipping or mailing forms)
Fort McHenry Yard
Baltimore, Maryland 21230"

3.8 COMPLETION INSPECTION

3.8.1 Punch-Out Inspection

Near the completion of all work or any increment thereof established by a completion time stated in the Special Clause in Section 00800 of the Solicitation entitled "Commencement, Prosecution, and Completion of Work," or stated elsewhere in the specifications, the CQC System Manager shall conduct an inspection of the work and develop a punchlist of items which do not conform to the approved drawings and specifications. Such a list of deficiencies shall be included in the CQC documentation, as required by paragraph DOCUMENTATION below, and shall include the estimated date by which the deficiencies will be corrected. The CQC System Manager or staff shall make a second inspection to ascertain that all deficiencies have been corrected. Once this is accomplished, the Contractor shall notify the Government that the facility is ready for the Government Pre-Final inspection.

3.8.2 Pre-Final Inspection

The Government will perform this inspection to verify that the facility is complete and ready to be occupied. A Government Pre-Final Punch List may be developed as a result of this inspection. The Contractor's CQC System Manager shall ensure that all items on this list have been corrected before notifying the Government so that a Final inspection with the customer can be scheduled. Any items noted on the Pre-Final inspection shall be corrected in a timely manner. These inspections and any deficiency corrections required by this paragraph shall be accomplished within the time slated for completion of the entire work or any particular increment thereof if the project is divided into increments by separate completion dates.

3.8.3 Final Acceptance Inspection

The Contractor's Quality Control Inspection personnel, plus the superintendent or other primary management person, and the Contracting Officer's Representative shall be in attendance at this inspection. Additional Government personnel including, but not limited to, those from Base/Post Civil Facility Engineer user groups, and major commands may also be in attendance. The final acceptance inspection will be formally scheduled by the Contracting Officer based upon results of the Pre-Final inspection. Notice shall be given to the Contracting Officer at least 14 days prior to the final acceptance inspection and shall include the Contractor's assurance that all specific items previously identified to the Contractor as being unacceptable, along with all remaining work performed under the contract, will be complete and acceptable by the date scheduled for the final acceptance inspection. Failure of the Contractor to have all contract work acceptably complete for this inspection will be cause for the Contracting Officer to bill the Contractor for the Government's additional inspection cost in accordance with the contract clause titled "Inspection of Construction".

3.9 DOCUMENTATION

The Contractor shall maintain current records providing factual evidence that required quality control activities and/or tests have been performed. These records shall include the work of subcontractors and suppliers and shall be on an acceptable form that includes, as a minimum, the following information:

a. Contractor/subcontractor and their area of responsibility.

b. Operating plant/equipment with hours worked, idle, or down for repair.

c. Work performed each day, giving location, description, and by whom. When Network Analysis (NAS) is used, identify each phase of work performed each day by NAS activity number.

d. Test and/or control activities performed with results and references to specifications/drawings requirements. The control phase should be identified (Preparatory, Initial, Follow-up). List deficiencies noted along with corrective action.

e. Quantity of materials received at the site with statement as to acceptability, storage, and reference to specifications/drawings requirements.

f. Submittals reviewed, with contract reference, by whom, and action taken.

g. Off-site surveillance activities, including actions taken.

h. Job safety evaluations stating what was checked, results, and instructions or corrective actions.

i. Instructions given/received and conflicts in plans and/or specifications.

j. Contractor's verification statement.

These records shall indicate a description of trades working on the project; the number of personnel working; weather conditions encountered; and any delays encountered. These records shall cover both conforming and deficient features and shall include a statement that equipment and materials incorporated in the work and workmanship comply with the contract. The original and one copy of these records in report form shall be furnished to the Government daily within 24 hours after the date covered by the report, except that reports need not be submitted for days on which no work is performed. As a minimum, one report shall be prepared and submitted for every 7 days of no work and on the last day of a no work period. All calendar days shall be accounted for throughout the life of the contract. The first report following a day of no work shall be for that day only. Reports shall be signed and dated by the CQC System Manager. The report from the CQC System Manager shall include copies of test reports and copies of reports prepared by all subordinate quality control personnel.

3.10 SAMPLE FORMS

Sample forms enclosed at the end of this section.

3.11 NOTIFICATION OF NONCOMPLIANCE

The Contracting Officer will notify the Contractor of any detected noncompliance with the foregoing requirements. The Contractor shall take immediate corrective action after receipt of such notice. Such notice, when delivered to the Contractor at the work site, shall be deemed sufficient for the purpose of notification. If the Contractor fails or refuses to comply promptly, the Contracting Officer may issue an order stopping all or part of the work until satisfactory corrective action has been taken. No part of the time lost due to such stop orders shall be made the subject of claim for extension of time or for excess costs or damages by the Contractor.

-- End of Section --

Contractor's Name: _____
Address: _____
_____
Phone Number: _____

CONSTRUCTION QUALITY CONTROL REPORT

PROJECT NAME: _____
LOCATION:_____ DATE: _____
CONTRACT NUMBER:_____ REPORT NO.:_____

SUPERINTENDENT:_____

TYPE OF WORKERS	NUMBER	TYPES OF CONSTRUCTION EQUIPMENT ON SITE	NUMBER

SUBCONTRACTORS

COMPANY	RESPONSIBILITY	FOREMAN	NO. OF WORKERS

TOTALS

NO. OF WORKERS TODAY	MANHOURS TODAY	MANHOURS FOR THIS PERIOD

CONTRACT MATERIALS AND EQUIPMENT DELIVERED TO SITE:

WEATHER:_____ SITE CONDITIONS:_____

DID A DELAY OR WORK STOPPAGE OCCUR TODAY? _____
IF YES, EXPLAIN.

HAS ANYTHING DEVELOPED IN THE WORK WHICH MAY LEAD TO A CHANGE OR FINDING OF FACT? _____ IF YES, EXPLAIN.

DESCRIPTION OF ALL WORK PERFORMED TODAY
(LIST BY DEFINABLE FEATURES OF WORK)

PREPARATORY INSPECTION:

LIST ALL INSPECTIONS BY SUBJECT AND SPECIFICATION LOCATION.
ATTACH MINUTES OF MEETING AND LIST OF ALL ATTENDEES.

HAVE ALL REQUIRED SUBMITTALS AND SAMPLES OF CONSTRUCTION BEEN APPROVED.

DO THE MATERIALS AND EQUIPMENT TO BE USED CONFORM TO THE SUBMITTALS?

HAS ALL PRELIMINARY WORK BEEN INSPECTED, TESTED, AND COMPLETED?

TEST REQUIRED AND INSPECTION TECHNIQUES TO BE EXECUTED TO PROVE CONTRACT COMPLIANCE (INCLUDE BOTH EXPECTED AND ACTUAL RESULTS)

HAS A PHASE HAZARD ANALYSIS BEEN PERFORMED?

COMMENTS AND DEFICIENCIES NOTED AND CORRECTIVE ACTIONS TAKEN:

ALL INSTRUCTIONS RECEIVED FROM QA PERSONNEL AND ACTIONS TAKEN:

JOB SAFETY (INCLUDE MEETINGS HELD AND DEFICIENCIES NOTED WITH CORRECTIVE ACTIONS):

INITIAL INSPECTION:

LIST ALL INSPECTIONS BY SUBJECT AND SPECIFICATION LOCATION. COMMENTS AND/OR DEFICIENCIES NOTED AND CORRECTIVE ACTION TAKEN:

FOLLOW-UP INSPECTION:

LIST ALL INSPECTIONS BY SUBJECT AND SPECIFICATION LOCATION. COMMENTS AND/OR DEFICIENCIES NOTED AND CORRECTIVE ACTION TAKEN.

SIGNATURE:_____
QUALITY CONTROL REPRESENTATIVE/MANAGER

THE ABOVE REPORT IS COMPLETE AND CORRECT. ALL MATERIALS AND EQUIPMENT USED AND ALL WORK PERFORMED DURING THIS REPORTING PERIOD ARE IN COMPLIANCE WITH THE CONTRACT SPECIFICATIONS, AND SUBMITTALS, EXCEPT AS NOTED ABOVE.

SIGNATURE:_____
CONTRACTOR'S APPROVED AUTHORIZED REPRESENTATIVE

SECTION 01510

TEMPORARY CONSTRUCTION ITEMS

PART 1 GENERAL

The work covered by this section consists of furnishing all labor, materials, equipment, and services and performing all work required for or incidental to the items herein specified. No separate payment will be made for the construction and services required by this section, and all costs in connection therewith shall be included in the overall cost of the work unless specifically stated otherwise.

1.1 PROJECT SIGN: (AUG 1974)

A project sign shall be provided and erected at a location designated by the Contracting Officer. The sign shall conform to the requirements as shown on Attachment No. 1, a copy of which is attached hereto. The sign shall be erected as soon as possible and within 15 days after the date of receipt of notice to proceed. Upon completion of the project, the sign shall be removed and disposed of by the Contractor. (CENAB)

1.2 SAFETY SIGN (AUG 1974)

A safety sign shall be provided and erected at a location designated by the Contracting Officer. The sign shall conform to the requirements as shown on Attachment No. 2, a copy of which is attached hereto. The sign shall be erected as soon as possible and within 15 days after the date of receipt of notice to proceed. The data required by the sign shall be corrected daily, with light colored metallic or non-metallic numerals. Numerals, including mounting hardware, shall be subject to the approval of the Contracting Officer. Upon completion of the project, the sign shall be removed and disposed of by the Contractor. (CENAB)

1.3 TEMPORARY ELECTRICAL WORK: (APR 1962)

Interior work which will be visible in the finished project will be executed only under conditions of illumination of an intensity equal to or greater than 6.1 m candles. If the Contractor fails to maintain the required illumination the Contracting Officer may issue an order stopping all or part of the work until satisfactory corrective action has been taken. No part of the time lost due to any such stop order shall be made subject of claim for extension of time or for excess costs or damages by the Contractor. (CENAB-EN-DT)

1.4 GOVERNMENT FIELD OFFICE

1.4.1 Resident Engineer's Office

The Contractor shall provide the Government Resident Engineer with an office, approximately 60.10 m in floor area, located where directed, and providing space heat, electric light and power, toilet facilities consisting of one lavatory and one water closet complete with connections to water and sewer mains. A mail slot shall be provided in the door, or an apartment-type lockable mail box mounted on the surface of the door. At completion of the project, the office shall remain the property of the Contractor and shall be removed from the site. All utility connections

shall be connected and disconnected in accordance with local codes and to the satisfaction of the Contracting Officer. If a window style air conditioner is used then the refrigerant shall be one of the fluorocarbon gases that is in accordance with FS BB-F-1421 and has an Ozone Depletion Potential (ODP) of less than or equal to 0.05.

1.4.2 Trailer-Type Mobile Office (Contractor's Option)

In lieu of constructing, maintaining and, at end of construction period, removing a temporary type field office, the Contractor may, at his option, furnish and maintain a trailer-type mobile office acceptable to the Contracting Officer and providing as a minimum the facilities specified above. The trailer shall be securely anchored to the ground at all four corners to guard against movement during high winds.

1.5 TEMPORARY PAVING PATCH

The Contractor shall place a temporary patch of cold mixed asphalt of adequate size and thickness immediately after utility trenches or other road or paved area openings are backfilled and compacted as specified in DIVISION II. The temporary patch shall be maintained by the Contractor until he permanently repairs the opening as delineated in DIVISION II. (SUGG NO. 75-183)

PART 2 PRODUCT
NOT APPLICABLE

PART 3 EXECUTION
NOT APPLICABLE

-- End of Section --

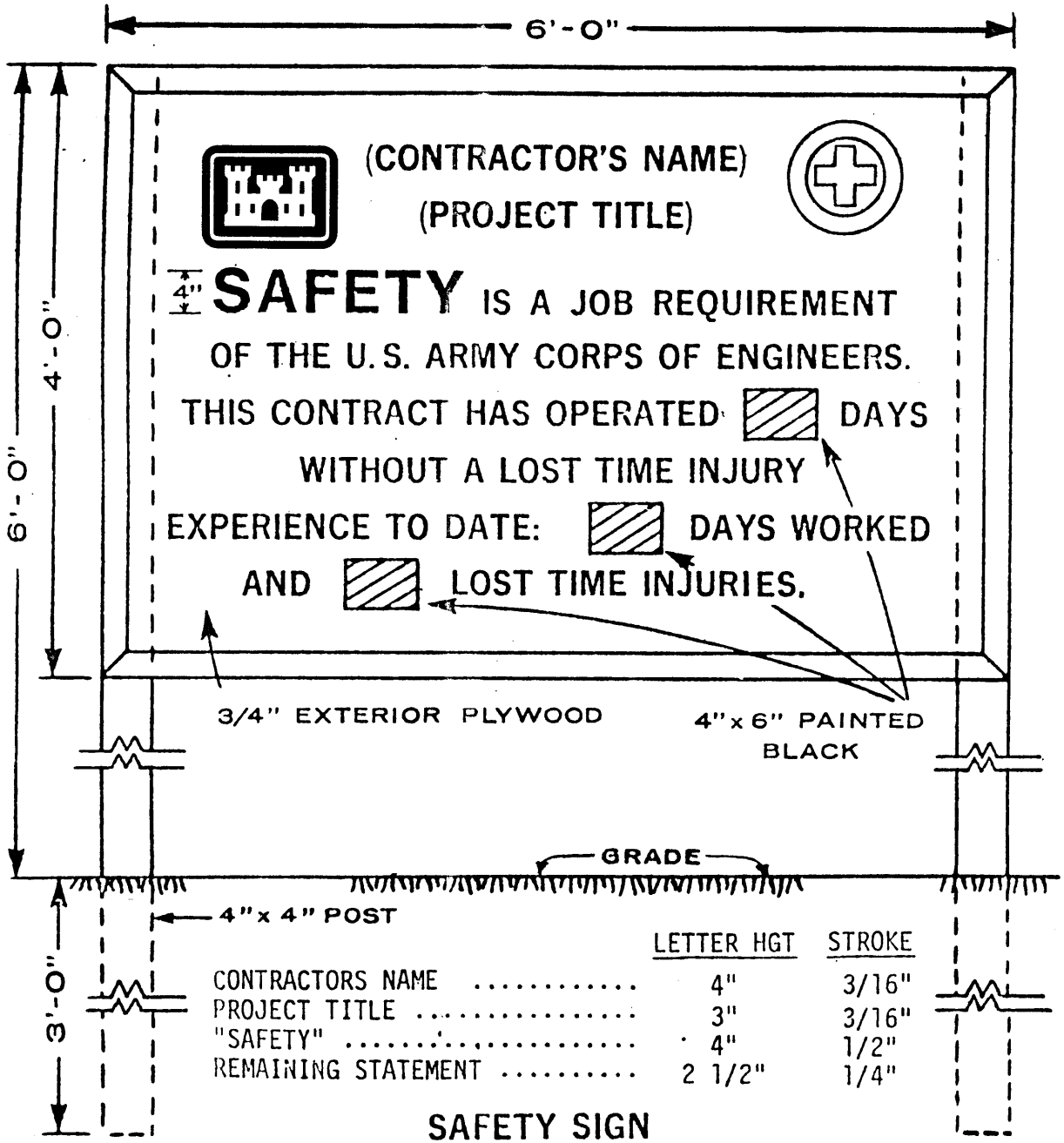

	LETTER HGT	STROKE
CONTRACTORS NAME	4"	3/16"
PROJECT TITLE	3"	3/16"
"SAFETY"	4"	1/2"
REMAINING STATEMENT	2 1/2"	1/4"

SAFETY SIGN

SIGN MATERIALS

POST 4"x4";3/4" EXTERIOR PLYWOOD 4'-0"x 6'-0", 2"x2" FRAMING WITH MITERED CORNERS. FRAMING ENCLOSED EDGES OF PLYWOOD AND BE INSTALLED FLUSH ON BACK SIDE AND PROJECTING IN FRONT. OUTSIDE WHITE, HOUSE PAINT-2 COATS; BOTH SIDES AND EDGES; COLORS IN OIL FOR LETTERING - LAMP BLACK AND BULLETIN RED; CASTLE SHALL BE RED; LETTERING SHALL BE BLACK; THE CROSS SHALL BE GREEN

THE CASTLE INSIGNIA SHALL BE FURNISHED BY THE GOVERNMENT IN PRESSURE SENSITIVE VINYL FOR AFFIXING BY THE CONTRACTOR.

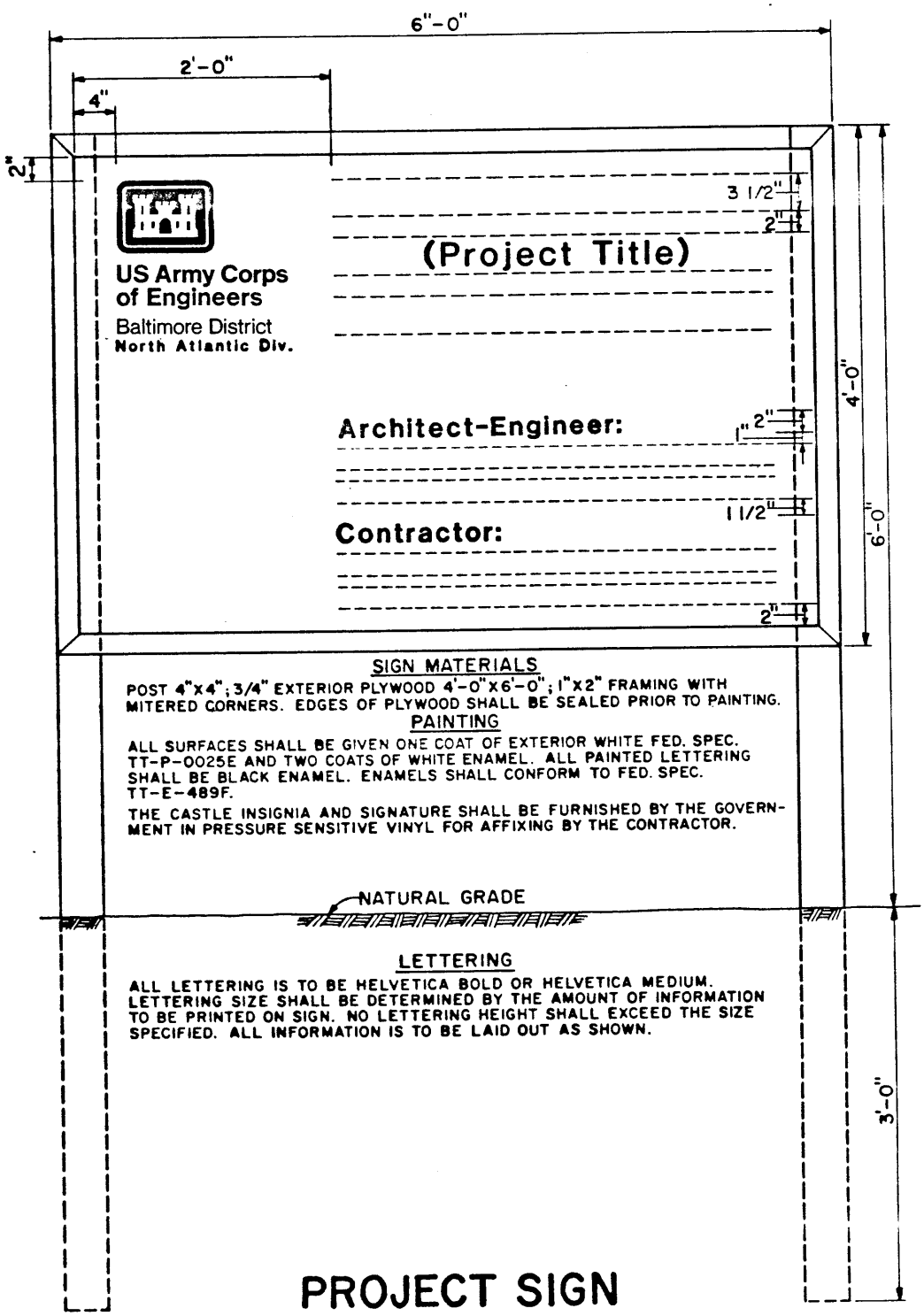

SIGN MATERIALS

POST 4"x4"; 3/4" EXTERIOR PLYWOOD 4'-0"x6'-0"; 1"x2" FRAMING WITH MITERED CORNERS. EDGES OF PLYWOOD SHALL BE SEALED PRIOR TO PAINTING.

PAINTING

ALL SURFACES SHALL BE GIVEN ONE COAT OF EXTERIOR WHITE FED. SPEC. TT-P-0025E AND TWO COATS OF WHITE ENAMEL. ALL PAINTED LETTERING SHALL BE BLACK ENAMEL. ENAMELS SHALL CONFORM TO FED. SPEC. TT-E-489F.

THE CASTLE INSIGNIA AND SIGNATURE SHALL BE FURNISHED BY THE GOVERNMENT IN PRESSURE SENSITIVE VINYL FOR AFFIXING BY THE CONTRACTOR.

LETTERING

ALL LETTERING IS TO BE HELVETICA BOLD OR HELVETICA MEDIUM. LETTERING SIZE SHALL BE DETERMINED BY THE AMOUNT OF INFORMATION TO BE PRINTED ON SIGN. NO LETTERING HEIGHT SHALL EXCEED THE SIZE SPECIFIED. ALL INFORMATION IS TO BE LAID OUT AS SHOWN.

PROJECT SIGN

SECTION 01561

ENVIRONMENTAL PROTECTION

PART 1 GENERAL

The work covered by this section consists of furnishing all labor, materials and equipment and performing all work required for the prevention of environmental pollution during, and as the result of, construction operations under this contract except for those measures set forth in the Technical Provisions of these specifications. For the purpose of this specification, environmental pollution is defined as the presence of chemical, physical, or biological elements or agents which adversely affect human health or welfare; unfavorably alter ecological balances of importance to human life or affect other species of importance to man. The control of environmental pollution requires consideration of air, water, and land.

1.1 SUBMITTALS

Government approval is required for submittals with a "GA" designation; submittals having an "FIO" designation are for information only. The following shall be submitted in accordance with Section 01330 SUBMITTAL PROCEDURES:

SD-08 Statements

Facility Plan; GA|AR.

Location of storage and service facilities.

Temporary Plan; GA|AR.

Temporary excavation and embankments.

1.2 APPLICABLE REGULATIONS

The Contractor and his subcontractors in the performance of this contract, shall comply with all applicable Federal, State, and local laws and regulations concerning environmental pollution control and abatement in effect on the date of this solicitation, as well as the specific requirements stated elsewhere in the contract specifications.

1.3 NOTIFICATION

The Contracting Officer will notify the Contractor of any non-compliance with the foregoing provisions and the action to be taken. The Contractor shall, after receipt of such notice, immediately take corrective action. If the Contractor fails or refuses to comply promptly, the Contracting Officer may issue an order stopping all or part of the work until satisfactory corrective action has been taken. No part of time lost due to any such stop order shall be made the subject of a claim for extension of time or for excess costs or damages by the Contractor unless it is later determined that the Contractor was in compliance.

1.4 SUBCONTRACTORS

Compliance with the provisions of this section by subcontractors will be the responsibility of the Contractor.

1.5 PROTECTION OF WATER RESOURCES

The Contractor shall not pollute streams, lakes or reservoirs with fuels, oils, bitumens, calcium chloride, acid construction wastes or other harmful materials. All work under this contract shall be performed in such a manner that objectionable conditions will not be created in streams through or adjacent to the project areas.

1.6 EROSION AND SEDIMENTATION CONTROL

The Contractor shall accomplish the erosion and sedimentation control in accordance with the contract drawings. At the outset of construction, the Contractor will be required to accept by signature a Transfer of Authority letter. The acceptance of the Transfer of Authority places responsibility on the Contractor to fully adhere to the provisions of the General Permit for erosion and sedimentation control and stormwater management.

1.7 BURNING

Burning will be allowed only if permitted in other sections of the specifications or authorized in writing by the Contracting Officer. The specific time, location and manner of burning shall be subject to the approval of the Contracting Officer. Fires shall be confined to a closed vessel, guarded at all times and shall be under constant surveillance until they have burned out or have been extinguished. All burning shall be so thorough that the materials will be reduced to ashes.

1.8 DUST CONTROL

The Contractor shall maintain all work area free from dust which would contribute to air pollution. Approved temporary methods of stabilization consisting of sprinkling, chemical treatment, light bituminous treatment or similar methods will be permitted to control dust. Sprinkling, where used, must be repeated at such intervals as to keep all parts of the disturbed area at least damp at all times. Dust control shall be performed as the work proceeds and whenever a dust nuisance or hazard occurs.

1.9 PROTECTION OF LAND RESOURCES

1.9.1 General

It is intended that the land resources within the project boundaries and outside the limits of permanent work performed under this contract be preserved in their present condition or be restored to a condition after completion of construction that will appear to be natural and not detract from the appearance of the project. Insofar as possible, the Contractor shall confine his construction activities to areas defined by the plans and specifications or to be cleared for other operations. The following additional requirements are intended to supplement and clarify the requirements of the CONTRACT CLAUSES:

1.9.2 Protection of trees retained

1.9.2.1 Contractors Responsibility

The Contractor shall be responsible for the protection of the tops, trunks and roots of all existing trees that are to be retained on the site. Protection shall be maintained until all work in the vicinity has been completed and shall not be removed without the consent of the Contracting Officer. If the Contracting Officer finds that the protective devices are insufficient, additional protection devices shall be installed.

1.9.2.2 Stockpiling

Heavy equipment, vehicular traffic, or stockpiling of any materials shall not be permitted within the drip line of trees to be retained.

1.9.2.3 Storage

No toxic materials shall be stored within 30.5 m from the drip line of trees to be retained.

1.9.2.4 Confined Area

Except for areas shown on the plans to be cleared, the Contractor shall not deface, injure, or destroy trees or shrubs, nor remove or cut them without special authority. Existing near by trees shall not be used for anchorage unless specifically authorized by the Contracting Officer. Where such special emergency use is permitted, the Contractor shall first adequately protect the trunk with a sufficient thickness of burlap over which softwood cleats shall be tied.

1.9.2.5 Tree Defacing

No protective devices, signs, utility boxes or other objects shall be nailed to trees to be retained on the site.

1.9.3 Restoration of Landscape Damage

Any trees or other landscape feature scarred or damaged by the Contractor's operations shall be restored as nearly as possible to its original condition at the Contractor's expense. The Contracting Officer will decide what method of restoration shall be used, and whether damaged trees shall be treated and healed or removed and disposed of. All scars made on trees, designated on the plans to remain, and all cuts for the removal of limbs larger than 25.4 mm in diameter shall be coated as soon as possible with an approved tree wound dressing. All trimming or pruning shall be performed in an approved manner by experienced workmen with saws or pruning shears. Tree trimming with axes will not be permitted. Where tree climbing is necessary, the use of climbing spurs will not be permitted. Trees that are to remain, either within or outside established clearing limits, that are subsequently damaged by the Contractor and are beyond saving in the opinion of the Contracting Officer, shall be immediately removed and replaced with a nursery-grown tree of the same species. Replacement trees shall measure no less than 50.8 mm in diameter at 152.4 mm above the ground level.

1.9.4 Location of Storage and Services Facilities

The location on Government property of the Contractor's storage and service facilities, required temporarily in the performance of the work, shall be upon cleared portions of the job site or areas to be cleared. The

preservation of the landscape shall be an imperative consideration in the selection of all sites and in the construction of buildings. A facility plan showing storage and service facilities shall be submitted for approval to the Contracting Officer. Where buildings or platforms are constructed on slopes, the Contracting Officer may require cribbing to be used to obtain level foundations. Benching or leveling of earth may not be allowed, depending on the location of the proposed facility.

1.9.5 Temporary Excavation and Embankment

If the Contractor proposes to construct temporary roads, embankments or excavations for plant and/or work areas, he shall submit a temporary plan for approval prior to scheduled start of such temporary work.

PART 2 PRODUCT
NOT APPLICABLE

PART 3 EXECUTION
NOT APPLICABLE

-- End of Section --

SECTION 01720

AS-BUILT DRAWINGS - CADD

PART 1 GENERAL

1.1 Preparation

This section covers the preparation of as-built drawings complete, as a requirement of this contract. The terms "drawings," "contract drawings," "drawing files," and "final as-built drawings" refer to a set of computer-aided design and drafting (CADD) contract drawings in electronic file format which are to be used for as-built drawings.

1.2 PROGRESS MARKED UP AS-BUILT PRINTS

The Contractor shall revise one set of paper prints to show the as-built conditions during the prosecution of the project. These as-built marked prints shall be kept current and available on the jobsite at all times. All changes from the contract plans which are made in the work or additional information which might be uncovered in the course of construction shall be accurately and neatly recorded as they occur by means of details and notes. The as-built marked prints will be jointly reviewed for accuracy and completeness by the Contracting Officer and a responsible representative of the construction Contractor prior to submission of each monthly pay estimate. If the Contractor fails to maintain the as-built drawings as specified herein, the Contracting Officer will deduct from the monthly progress payment an amount representing the estimated cost of maintaining the as-built drawings and will continue the monthly deduction of the 10% retainage even after 50% completion of the contract. This monthly deduction will continue until an agreement can be reached between the Contracting Officer and a representative of the Contractor regarding the accuracy and completeness of updated drawings. The prints shall show the following information, but not be limited thereto:

1.2.1 Location and Description

The location and description of any utility lines or other installations of any kind or description known to exist within the construction area. The location includes dimensions to permanent features.

1.2.2 Location and Dimensions

The location and dimensions of any changes within the building or structure.

1.2.3 Corrections

Correct grade, cross section, or alignment of roads, earthwork, structures or utilities if any changes were made from contract plans.

Correct elevations if changes were made in site grading.

1.2.4 Changes

Changes in details of design or additional information obtained from

working drawings specified to be prepared and/or furnished by the Contractor; including but not limited to fabrication, erection, installation plans and placing details, pipe sizes, insulation material, dimensions of equipment foundations, etc.

The topography, invert elevations and grades of all drainage installed or affected as a part of the project construction.

All changes or modifications which result from the final inspection.

1.2.5 Options

Where contract drawings or specifications present options, only the option selected for construction shall be shown on the as-built prints.

1.3 SUBMITTALS

Government approval is required for submittals with a "GA" designation; submittals having an "FIO" designation are for information only. The following shall be submitted in accordance with Section 01330 SUBMITTAL PROCEDURES:

SD-01 Data

CADD Files; FIO;AR.

Shall consist of two sets of completed as-built contract drawings on separate media consisting of both CADD files (compatible with the Using Agency/Sponsor's system on electronic storage media identical to that supplied by the Government) and mylars.

SD-04 Drawings

Progress Prints; GA|AR.

Preparation of two copies of as-builts from the Contractor to the Contracting Officer for review and approval.

Final Prints; GA|AR.

Receipt by the Contractor of the approved marked as-built prints.

1.4 PRELIMINARY SUBMITTAL

At the time of final inspection, the Contractor shall prepare two copies of the progress as-built prints and these shall be delivered to the Contracting Officer for review and approval. These as-built marked prints shall be neat, legible and accurate. The review by Government personnel will be expedited to the maximum extent possible. Upon approval, one copy of the as-built marked prints will be returned to the Contractor for use in preparation of final as-built drawings. If upon review, the as-built marked prints are found to contain errors and/or omissions, they shall be returned to the Contractor for corrections. The Contractor shall complete the corrections and return the as-built marked prints to the Contracting Officer within ten (10) calendar days.

1.5 DRAWING PREPARATION

1.5.1 As-Built Drawings Approval

Upon approval of the as-built prints submitted, the Contractor will be furnished by the Government one set of contract drawings, with all amendments incorporated, to be used for as-built drawings. These contract drawings will be furnished on electronic media as specified by the Using Agency/Sponsor. These drawings shall be modified as may be necessary to correctly show all the features of the project as it has been constructed by bringing the contract set into agreement with the approved as-built prints, adding such additional drawings as may be necessary. These drawings are part of the permanent records of this project and the Contractor shall be responsible for the protection and safety thereof until returned to the Contracting Officer. Any drawings damaged or lost by the Contractor shall be satisfactorily replaced by the Contractor at no expense to the Government.

1.5.2 Proficient Personnel

Only personnel proficient in the preparation of engineering CADD drawings to standards satisfactory and acceptable to the Government shall be employed to modify the contract drawings or prepare additional new drawings. All additions and corrections to the contract drawings shall be equal in quality to that of the originals. Line work, line weights, lettering, layering conventions, and symbols shall be the same as the original line work, line weights, lettering, layering conventions, and symbols. If additional drawings are required, they shall be prepared using the specified electronic file format applying the same guidance specified for original drawings. The title block and drawing border to be used for any new as-built drawings shall be identical to that used on the contract drawings. All additions and corrections to the contract drawings shall be accomplished using CADD media files supplied by the Government. These contract drawings will already be compatible with the Using Agency/Sponsor's system when received by the Contractor. The Using Agency/Sponsor uses AutoCAD Release 14. The media files will be supplied on ISO 9660 Format CD-ROM. The Contractor is responsible for providing all program files and hardware necessary to prepare as-built drawings. The Contracting Officer will review all as-built drawings for accuracy and the Contractor shall make all required corrections, changes, additions, and deletions.

1.5.3 Final Revisions

When final revisions have been completed, the cover sheet drawing shall show the wording "RECORD DRAWING AS-BUILT" followed by the name of the General Contractor in letters at least 3/16" (5 mm) high. All other contract drawings shall be marked either "As-Built" drawing denoting no revisions on the sheet or "Revised As-Built" denoting one or more revisions. All original contract drawings shall be dated in the revision block (SEE ATTACHMENTS 1 and 2) located at the end of this section. [(SEE ATTACHMENTS 1 and 2 (at the end of this section) - while the title block sample attachments do not depict the contract drawings' title blocks, the sample revision blocks above these attachments are to be used as guidance in completing the actual contract drawings' revision blocks).]

1.6 FINAL REQUIREMENTS

After receipt by the Contractor of the approved marked as-built prints and the original contract drawing files the Contractor will, within 30 days

for contracts less than $5 million or 60 days for contracts $5 million and above, make the final as-built submittal. This submittal shall consist of two sets of completed as-built contract drawings on separate media consisting of both CADD files (compatible with the Using Agency/Sponsor's system on electronic storage media identical to that supplied by the Government) and mylars; two blue line prints of these drawings and the return of the approved marked as-built prints. They shall be complete in all details and identical in form and function to the contract drawing files supplied by the Government. Any translations or adjustments necessary to accomplish this is the responsibility of the Contractor. The Government reserves the right to reject any drawing files it deems incompatible with its CADD system. All paper prints, drawing files and storage media submitted will become the property of the Government upon final approval. Failure to submit as-built drawing files and marked prints as required herein shall be cause for withholding any payment due the Contractor under this contract. Approval and acceptance of final as-built drawings shall be accomplished before final payment is made to the Contractor.

1.7 PAYMENT

No separate payment will be made for the as-built drawings required under this contract, and all costs in connection therewith shall be considered a subsidiary obligation of the Contractor.

PART 2 PRODUCT
NOT APPLICABLE

PART 3 EXECUTION
NOT APPLICABLE

-- End of Section --

RECORD DRAWING AS-BUILT
XYZ CONTRACTOR

REV	DATE	DESCRIPTION	BY
	DEC 84	AS-BUILT	
2	29 APR 84	REVISED PER AMENDMENT NO.2 (DESCRIPTIVE)	A.E. / D.P.
1	2 APR 84	REVISED PER AMENDMENT NO.1 (DESCRIPTIVE)	A.E. / D.P.

US Army Corps of Engineers

U.S. ARMY ENGINEER DISTRICT, BALTIMORE
CORPS OF ENGINEERS
BALTIMORE, MARYLAND

FT. INDIANTOWN GAP PENNSYLVANIA

A

EQUIPMENT CONCENTRATION SITE & AMSA

COVER SHEET

DRAWING NUMBER	PLATE
X-000-00-00	3

SCALE: AS SHOWN	DATE: 1 APR 84	SHEET 1

ATTACHMENT 1

RECORD DRAWING AS-BUILT
XYZ CONTRACTOR

REV	DATE	DESCRIPTION	BY
3	DEC 84	REVISED AS-BUILT	
2	29 APR 84	REVISED PER AMENDMENT NO.2 (DESCRIPTIVE)	A.E. / D.P.
1	2 APR 84	REVISED PER AMENDMENT NO.1 (DESCRIPTIVE)	A.E. / D.P.

US Army Corps of Engineers

U.S. ARMY ENGINEER DISTRICT, BALTIMORE
CORPS OF ENGINEERS
BALTIMORE, MARYLAND

FT. INDIANTOWN GAP — PENNSYLVANIA

EQUIPMENT CONCENTRATION SITE & AMSA

COVER SHEET

DRAWING NUMBER	PLATE
X-000-00-00	3

SCALE: AS SHOWN | DATE: 1 APR 84 | SHEET 1

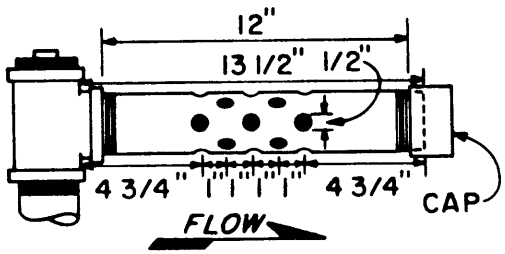

NOTE: USE STANDARD 2" STAINLESS STEEL PIPE & FITTINGS. EDGES OF HOLES TO BE FREE OF BURRS BUT NOT ROUNDED. TUBE TO BE FIXED IN A HORIZONTAL POSITION.

2 DESIGN FOR 2" STATIC TUBE
NTS

ATTACHMENT 2

SECTION 02200

STORMWATER MANAGEMENT POND AND EMBANKMENT

PART 1 GENERAL

1.1 REFERENCES

AMERICAN SOCIETY FOR TESTING AND MATERIALS (ASTM)

ASTM D 1556	Density of Soil in Place by the Sand-Cone Method
ASTM D 1557	Moisture-Density Relations of Soils and Soil-Aggregate Mixtures Using a 10-lb (4.5 kg) Rammer and 18-in (457 mm) Drop
ASTM D 2487	Classification of Soils for Engineering Purposes
ASTM D 2922	Density of Soil and Soil Aggregate in Place by Nuclear Methods (Shallow Depth)

1.2 DEFINITIONS

1.2.1 Degree of Compaction

Degree of compaction required is expressed as a percentage of the maximum density obtained by the test procedure presented in Procedure C of ASTM D 1557, abbreviated hereinafter as percent laboratory maximum density.

1.3 SUBMITTALS.

Government approval is required for submittals with a "GA" designation; submittals having an "FIO" designation are for information only. The following shall be submitted in accordance with Section 01330 SUBMITTAL PROCEDURES:

SD-09 Reports

Test Reports; GA|AR.

Copies of all laboratory and field test reports shall be submitted to the Contracting Officer within 24 hours of the completion of the test.

PART 2 PRODUCTS

2.1 MATERIALS

2.1.1 Satisfactory Materials:

2.1.1.1 Satisfactory Impervious Materials

Satisfactory impervious material for use in the cut off trench and impervious core within the limits of the stormwater management pond and appurtenant structures, shall be those materials classified in ASTM D 2487

as GC, SC, CL or CH or combinations thereof, with a minimum Plastic Index of 7, properly worked by the contractor to obtain the specified compaction while maintaining the moisture content as specified hereinafter. The Contractor should be aware of the possible construction difficulties and the very close moisture control required in the proper field placement and compaction of the CL and CH materials.

2.1.1.2 Satisfactory Fill Materials

Fill, embankment, and backfill within the limits of the stormwater management pond and beneath appurtenant structures shall be those materials classified in ASTM D 2487 as GW, GP, GM, GC, SW, SM, SC, or combinations thereof, properly worked by the contractor to obtain the specified compaction while maintaining the moisture content as specified hereinafter; and may also include CL, ML or combinations thereof , properly worked by the contractor to obtain the specified compaction while maintaining the moisture content as specified hereinafter; however, the contractor should be aware of the possible construction difficulties and the very close moisture control required in the proper field placement and compaction of these latter materials, as compared to the previously classified materials.

2.1.1.3 Satisfactory Subgrade Soils

Satisfactory soils for the subgrade within the limits of the stormwater management pond and beneath appurtenant structures shall consist of all subgrade soils, except as specified hereinafter in the paragraph UNSATISFACTORY MATERIAL, SUBGRADE.

2.1.2 Unsatisfactory Materials:

2.1.2.1 Impervious Material

Unsatisfactory materials for impervious material within the limits of the stormwater management pond and beneath appurtenant structures shall be those materials not meeting the requirements of paragraph Impervious Materials, as defined above.

2.1.2.2 Fill, Embankment, and Backfill

Unsatisfactory materials for fill, embankment, and backfill within the limits of the stormwater management pond and beneath appurtenant structures shall be those materials not meeting the requirements of paragraph Satisfactory Fill Materials, as defined above.

2.1.2.3 Subgrade:

2.1.2.3.1 General

Satisfactory subgrade soils which are rendered unsuitable by the contractor due to inadequate site and/or excavation drainage or due to negligence by working (remolding) or compacting otherwise satisfactory in place subgrade soils under adverse moisture conditions, as determined by the Contracting Officer, shall be removed and replaced with satisfactory fill material or shall be worked or altered until rendered suitable as determined by the Contracting Officer, except under concrete foundations as specified hereinafter in paragraph EXCAVATION, at no additional cost to the Government.

2.2 Stormwater Management Pond and Stormwater Management Pond Embankment

Unsatisfactory materials for the subgrade within the limits of the stormwater management pond and beneath appurtenant structures shall be all materials classified in ASTM D 2487 except SP, SW, SM, GP, GW, GM or combinations thereof. Materials classified as GM and SM are satisfactory only when the fines are nonplastic. Unsatisfactory materials for the subgrade within the limits of the stormwater management pond embankment shall be materials classified in ASTM D 2487 as Pt, OH, or OL or combinations thereof.

2.3 Cohesionless and Cohesive Materials

Cohesionless materials include materials classified in ASTM D 2487 as GW, GP, SW, and SP. Cohesive materials include materials classified as GC, SC, ML, CL, MH, and CH. Materials classified as GM and SM will be identified as cohesionless only when the fines are nonplastic.

PART 3 EXECUTION

3.1 CLEARING AND GRUBBING

The areas within lines 1.5 meters outside of the stormwater management pond embankment limits shall be cleared and grubbed of trees, stumps, roots, brush, and other vegetation, debris, existing foundations, pavements, utility lines, structures, fences, and other items that would interfere with construction operations. Stumps, logs, roots, and other organic matter shall be completely removed and the resulting depressions shall be filled with satisfactory material placed and compacted in accordance with paragraph FILLING AND BACKFILLING. Cleared and grubbed materials shall be disposed of in the spoil areas indicated in paragraph Spoil Areas.

3.2 STRIPPING

The top 150 mm of soil and organic matter shall be stripped below existing grade within the designated excavations and grading lines and deposited in storage piles. Excess stripped materials not suitable as topsoil or for other uses at the site shall be disposed as specified in paragraph Excavated Materials.

3.3 EXCAVATION

The excavation shall conform to the dimensions and elevations indicated for the stormwater management pond, except as specified hereinafter, and shall include all work incidental thereto. Excavations shall extend a sufficient distance from walls and footings to allow for placing and removal of forms for the drainage structures. Excavations below indicated depths will not be permitted except to remove unsatisfactory material. Unsatisfactory material encountered below the grades shown shall be removed as directed and replaced with satisfactory material, except that the overdepth excavation under concrete foundations shall be backfilled with concrete having a minimum 28 day compressive strength of 2000 psi, unless otherwise directed by the Contracting Officer; payment therefore will be made in conformance with the CHANGES clause of the CONTRACT CLAUSES except that no payment will be made when otherwise satisfactory material is made unsatisfactory as specified in subparagraph SUBGRADE-GENERAL of paragraph UNSATISFACTORY MATERIALS. Satisfactory material removed below the depths indicated without specific direction of the Contracting Officer shall be replaced at no additional cost to the Government to the indicated excavation grade with satisfactory materials, except the concrete footings

shall be increased in thickness to the bottom of the overdepth excavations. Satisfactory material shall be placed and compacted as specified in paragraph FILLING AND BACKFILLING. Determination of elevations and measurements of approved overdepth excavations of unsatisfactory material below grades indicated shall be done under the direction of the Contracting Officer.

3.4 DRAINAGE

Surface water shall be directed away from excavation and construction sites so as to prevent erosion and undermining of drainage structure foundations and rendering subgrade soils unsatisfactory. Diversion ditches, dikes and grading shall be provided and maintained as necessary during construction. Excavated slopes and backfill surfaces shall be protected to prevent erosion and sloughing. Excavation shall be performed so that the site and the area immediately surrounding the site and affecting operations at the site shall be continually and effectively drained.

3.5 CLASSIFICATION OF EXCAVATION

Excavation will be unclassified regardless of the nature of material encountered.

3.6 BLASTING

Blasting will not be permitted.

3.7 TRENCHES

Trenches for drain lines, riprap lined trenches and dry well shall be excavated to the required alinements and depths. The bottoms of trenches shall be graded to secure the required slope and shall be tamped if necessary to provide a firm subgrade. Recesses shall be excavated to accommodate joints so that pipe will be uniformly supported for the entire length.

3.8 BORROW

Where satisfactory materials are not available in sufficient quantity from required excavations, approved materials shall be obtained as specified in Section 02300 SITE GRADING AND EARTHWORK FOR ROADWAYS.

3.9 UTILIZATION OF EXCAVATED MATERIALS

3.9.1 Excavated Materials

Satisfactory excavated material required for fill or backfill shall be placed in the proper section of the permanent work required under this section or shall be separately stockpiled if it cannot be readily placed. Satisfactory material in excess of that required for the permanent work and unsatisfactory material shall be disposed of in the spoil areas indicated in paragraph SPOIL AREAS.

3.9.2 Spoil Areas

Spoil materials shall be disposed of in spoil areas outside the limits of government-controlled lands and at the Contractor's expense and responsibility.

3.10 FINAL GRADE OF SURFACES OF SUPPORT CONCRETE

Excavation to final grade shall not be made until just before concrete is to be placed.

3.11 SUBGRADE PREPARATION

Unsatisfactory material in surfaces to receive fill or in excavated areas shall be removed and replaced with satisfactory materials. The surface shall be scarified to a depth of 150 mm before the fill is started. Sloped surfaces steeper than 1 vertical to 4 horizontal shall be plowed, stepped, benched, or broken up so that the fill material will bond with the existing material. When subgrades are less than the specified density, the ground surface shall be broken up to a minimum depth of 150 mm, pulverized, and compacted to the specified density. When the subgrade is part fill and part excavation or natural ground, the excavated or natural ground portion shall be scarified to a depth of 300 mm and compacted as specified for the adjacent fill. Material shall not be placed on surfaces that are muddy, frozen, or contain frost. Compaction shall be accomplished by sheepsfoot rollers, pneumatic-tired rollers, steel-wheeled rollers, or other approved equipment well suited to the soil being compacted. The contractor shall be prepared to moisten or aerate as necessary to provide an in-place moisture content within plus or minus 2 percent of optimum within the compacted lifts and/or subgrades for each material. Minimum subgrade density shall be as specified in paragraph FILLING AND BACKFILLING.

3.12 FILLING AND BACKFILLING

Satisfactory materials shall be used in bringing fills and backfills to the lines and grades indicated and for replacing unsatisfactory materials. Satisfactory materials shall be placed in horizontal layers not exceeding 200 mmin loose thickness, or 150 mm when hand-operated compactors are used. After placing, each layer shall be plowed, disked, or otherwise broken up, moistened or aerated as necessary to obtain plus or minus 2 percent of optimum moisture, thoroughly mixed and compacted as specified. Backfilling shall not begin until construction below finish grade has been approved, underground utilities systems have been inspected, tested and approved, forms removed, and the excavation cleaned of trash and debris. Backfill shall be brought to indicated finish grade. Backfill shall not be placed in wet or frozen areas. Heavy equipment for spreading and compacting backfilling shall not be operated closer to foundation than a distance equal to the height of backfill above the top of footing; the area remaining shall be compacted in layers not more than 100 mm in compacted thickness with power-driven hand tampers suitable for the material being compacted. Backfill shall be placed carefully around pipes to avoid damage to the pipes. Backfill shall not be placed against walls prior to 7 days after completion of the walls. As far as practicable, backfill shall be brought up evenly on each side of the wall and sloped to drain away from the wall. Each layer of fill and backfill shall be compacted to not less than the percentage of maximum density specified below:

	Percent Laboratory Maximum Density	
	Cohesive Material	Cohesionless Material
Fill, embankment, and backfill		
Stormwater management embankment	85	90

Under proposed structures	90	95
Subgrade		
Under fill, embankment, and backfill	90	95
* Excavated areas	90	95

Approved compacted subgrades that are disturbed by the contractor's operations or adverse weather shall be scarified and compacted as specified hereinbefore to the required density prior to further construction thereon. Recompaction over underground utilities shall be by hand tamping.

* As indicated in paragraph STORMWATER MANAGEMENT POND, satisfactory subgrade soils beneath the stormwater management pond shall be pervious cohesionless materials. To ensure that the subgrade soils remain permeable during and after construction, subgrade soils beneath the stormwater management pond (excluding subgrade soils beneath stormwater management embankment and proposed structures) shall not be over-compacted or disturbed by heavy construction equipment.

3.13 TESTING

Testing shall be the responsibility of the Contractor and shall be performed at no additional cost to the Government. Testing procedures shall be in accordance to Section 02221 EXCAVATION FILLING AND BACKFILLING FOR BUILDINGS. Testing shall be performed by an approved commercial testing laboratory or may be performed by the contractor subject to approval. Tests shall be performed in sufficient number to insure that the specified density is being obtained. Approved compacted subgrades that are disturbed by contractor's operations or adverse weather shall be scarified and compacted as specified hereinbefore to the required density prior to further construction thereon. Recompaction shall be by hand tamping. Copies of the test results shall be furnished to the Contracting Officer. The following minimum testing at locations selected by the Contracting Officer is required:

3.13.1 Impervious, Fill, Backfill, and Existing Subgrade Materials (for each classification of material used):

3.13.1.1 Subgrade (Fill and Cut Areas)

One sieve analysis (and one liquid limit and plasticity index determination for cohesive soils) per 400 square meters or fraction thereof.

3.13.1.2 Impervious, Fill, and Backfill Material

One sieve analysis (and one liquid limit and plasticity index determination for cohesive soils) per 375 cubic meter(s) or fraction thereof.

3.13.1.3 Moisture Contents

A minimum of one test per 200 square meter(s) or fraction thereof of the subgrade prior to placement of impervious, fill, or backfill material thereon during stable weather conditions. In the stockpile, excavation, or borrow areas, a minimum of two tests per day per type of material or source of material being placed during stable weather conditions. During unstable weather, tests shall be made as dictated by local conditions and approved by the Contracting Officer.

3.13.1.4 Optimum Moisture and Laboratory Maximum Density

One moisture-density curve to determine the optimum moisture content and the laboratory maximum density values shall be done for each type of subgrade material (fill and cut areas) and one curve shall be done per 750 cubic meter(s) of each type of impervious, fill, and backfill materials, to include any borrow materials.

3.13.1.5 5 Additional Testing

Additional gradation, liquid limit, plasticity index determinations, and moisture-density curves shall be required if there is any change in gradation or particle shape or when any change occurs in the material which may affect the optimum moisture content or laboratory maximum density.

3.13.2 Field Density Tests

3.13.2.1 Subgrade

One per 100 square meter(s) or fraction thereof.

3.13.2.2 Backfill Materials

3.13.2.2.1 Impervious Material

One per lift per 100 square meter(s) or fraction thereof.

3.14 Fill Material

One per lift per 100 square meter(s) or fraction thereof.

3.15 Check Tests on In-Place Densities

If ASTM D 2922 is used, in-place densities shall be checked by ASTM D 1556 or as follows:

3.15.1 1 Subgrade

One check test per 400 square meter(s) or fraction thereof.

3.15.2 Material:

3.15.2.1 Impervious Material

One per lift per 400 square meter(s) or fraction thereof.

3.15.2.2 Fill Material

One check test per lift per 400 square meter(s) or fraction thereof.

3.16 Subgrade, fill, and backfill areas compacted by hand-operated machines

The minimum number of field density tests and check tests specified above shall be tripled in areas where compaction is accomplished by hand-operated machines.

3.17 GRADING

Areas within 1.5 meters outside of limits of the stormwater management pond and shall be constructed true to grade, shaped to drain, and shall be maintained free of trash and debris until final inspection has been completed and the work has been accepted.

3.18 SPREADING TOPSOIL

All areas shall be topsoiled. The surface shall be free of materials that would hinder planting or maintenance operations. The subgrade shall be pulverized to a depth of 50 mm by discing or plowing for the bonding of topsoil with the subsoil. Topsoil shall then be uniformly spread, graded, and compacted to a thickness of 100 mm and graded to the elevations and slopes shown, and left free of surface irregularities. Topsoil shall be compacted by one pass of a cultipacker, roller, or other approved equipment weighing 145 to 240 kilograms per linear meter of roller. Topsoil shall not be placed when the subgrade is frozen, excessively wet, extremely dry, or in a condition otherwise detrimental to seeding, planting, or proper grading.

3.19 PROTECTION

Settlement or washing that occurs in graded, topsoiled, or backfilled areas prior to acceptance of the work shall be repaired and grades reestablished to the required elevations and slopes.

-- End of Section --

SECTION 02221

EXCAVATION, FILLING AND BACKFILLING FOR BUILDINGS

PART 1 GENERAL

1.1 REFERENCES

The publications listed below form a part of this specification to the extent referenced. The publications are referred to in the text by basic designation only and represent the latest edition in force when this contract is awarded.

AMERICAN SOCIETY FOR TESTING AND MATERIALS (ASTM)

ASTM C 117	Material Finer than 75 um (No. 200) Sieve in Mineral Aggregates by Washing
ASTM C 127	Specific Gravity and Absorption of Coarse Aggregate
ASTM C 128	Specific Gravity and Absorption of Fine Aggregate
ASTM C 136	Sieve Analysis of Fine and Coarse Aggregates
ASTM D 1556	Density and Unit Weight of Soil in Place by the Sand-Cone Method
ASTM D 1557	Laboratory Compaction Characteristics of Soil Using Modified Effort (56,000 ft-lbf/cu. ft. (2,700 kN-m/cu.m.))
ASTM D 2216	Laboratory Determination of Water (Moisture) Content of Soil, and Rock
ASTM D 2487	Classification of Soils for Engineering Purposes (Unified Soil Classification System)
ASTM D 2922	Density of Soil and Soil-Aggregate in Place by Nuclear Methods (Shallow Depth)
ASTM D 2937	Density of Soil in Place by the Drive-Cylinder Method
ASTM D 3017	Water Content of Soil and Rock in Place by Nuclear Methods (Shallow Depth)
ASTM D 4318	Liquid Limit, Plastic Limit, and Plasticity Index of Soils
ASTM E 11	Wire-Cloth Sieves for Testing Purposes

1.2 DEFINITIONS

1.2.1 Degree of Compaction

Degree of compaction required is expressed as a percentage of the maximum density obtained by the test procedure presented in ASTM D 1557, Procedure C abbreviated hereinafter as percent laboratory maximum density.

1.3 SUBMITTALS

Government approval is required for submittals with a "GA" designation; submittals having an "FIO" designation are for information only. The following shall be submitted in accordance with Section 01330 SUBMITTAL PROCEDURES:

SD-09 Reports

Field Density Tests; FIO;AR. Testing of Backfill Materials; FIO;AR.

Copies of all laboratory and field test reports shall be submitted to the Contracting Officier within 24 hours of the completion of the test.

1.4 SPOIL AREAS

Spoil materials shall be disposed of in spoil areas located outside the limits of Government-controlled land at the contractor's expense and responsibility.

1.5 BORROW AREAS

Satisfactory fill materials are not available in sufficient quantity from required excavations, therefore approved materials shall be obtained from approved sources outside the limits of Government-controlled land at the Contractor's expense and responsibility. Relatively large amounts of satisfactory fill materials will be required from off-site sources at the expense and responsibility of the contractor. Therefore, to eliminate damage to Ernie Pyle Street and 10th Street from loadings due to the dump trucks, all dump trucks shall enter and leave the construction site from the north end of the site via Chisolm Avenue at Mapes Road (reference contract drawings).

PART 2 PRODUCTS

2.1 MATERIALS

2.1.1 Satisfactory Materials

2.1.1.1 Satisfactory Fill Materials

Fill, embankment, and backfill within the building lines of structures and to a distance of 1.5 meters outside the building lines shall be those materials classified in ASTM D 2487 as GW, GM, GC, SW, SM, SC, SP-SM, SP-SC or combinations thereof with a maximum particle size of 75 mm, properly worked by the contractor to obtain the specified compaction while maintaining the moisture content as specified hereinafter. SP materials without a sufficient amount of clay and silt size particles shall not be used in these areas due to compaction difficulties. Satisfactory materials may also include CL, ML, or combinations thereof, properly worked by the

contractor to obtain the specified compaction while maintaining the moisture content as specified hereinafter. The contractor should, however, be aware of the possible construction difficulties and the very close moisture control required in the proper field placement and compaction of these latter materials as compared to the previously classified materials. Satisfactory materials shall also be free of trash, debris, roots or other organic matter, or stones larger than 75 mm in any dimension.

2.1.1.2 Satisfactory Subgrade Soils

Satisfactory soils for the subgrade within the building lines of structures, beneath appurtenant structures, and beneath abutting paved areas shall consist of all subgrade soils, except as specified hereinafter in the paragraph UNSATISFACTORY MATERIAL, SUBGRADE.

2.1.2 Unsatisfactory Materials

2.1.2.1 Fill, Embankment, and Backfill

Unsatisfactory materials for fill, embankment, and backfill within the building lines of structures, beneath appurtenant structures, and beneath abutting paved areas shall be those materials not meeting the requirements of paragraph Satisfactory Fill Materials, as defined above.

2.1.2.2 Subgrade

a. General: Satisfactory subgrade soils which are rendered unsuitable by the contractor due to inadequate site and/or excavation drainage or due to negligence by working (remolding) or compacting otherwise satisfactory in place subgrade soils under adverse moisture conditions shall be removed and replaced with satisfactory fill material or shall be worked or altered until rendered suitable as determined by the Contracting Officer, except under concrete foundations as specified hereinafter in paragraph EXCAVATION, at no additional cost to the Government.

b. Building Lines: Unsatisfactory materials for the subgrade within the building lines of structures and for a distance of 1.5 meters outside these building lines shall be those materials classified in ASTM D 2487 as Pt, OH, OL, or combinations thereof.

2.1.3 Cohesionless and Cohesive Materials

Cohesionless materials include materials classified in ASTM D 2487 as GW, GP, SW, and SP. Cohesive materials include materials classified as GC, SC, ML, CL, MH, and CH. Materials classified as GM and SM will be identified as cohesionless only when the fines are nonplastic.

2.2 AGGREGATES

2.2.1 Base Course Under Interior Pavement Slabs-on-Grade

The requirements for base course are as specified in SECTION 02714, EXTERIOR PAVEMENT DRAINAGE LAYER AND INTERIOR PAVEMENT BASE COURSE.

2.2.1 Capillary Water Barrier for Non-Pavement Slabs-on-Grade

Capillary Water Barrier shall consist of clean, crushed, nonporous rock,

crushed gravel, or uncrushed gravel. The maximum particle size shall be 37.5 mm and no more than 2 percent by weight shall pass the 4.75 mm size sieve.

PART 3 EXECUTION

3.1 CLEARING AND GRUBBING

Clearing and grubbing is specified in Section 02110 CLEARING AND GRUBBING.

3.2 TOPSOIL

Topsoil shall be stripped to a depth to remove all in-place topsoil within the designated excavations and grading lines. This depth varies from 100 to 300 millimeters (reference boring logs) below existing grade. Topsoil shall be deposited in storage piles for later use. Excess topsoil shall be disposed as specified for excess excavated material.

3.3 EXCAVATION

Excavation shall conform to the dimensions and elevations indicated for each building, structure, and footing except as specified hereinafter, and shall include trenching for utility systems to a point 1.5 meters beyond the building line of each building and structure, excavation for underground fuel tanks, and all work incidental thereto. Excavation shall extend a sufficient distance from walls and footings to allow for placing and removal of forms. Excavations below indicated depths will not be permitted except to remove unsatisfactory material. Unsatisfactory material encountered below the grades shown shall be removed as directed and replaced with satisfactory material except that overdepth excavation under concrete foundations shall be backfilled with concrete having a minimum 28 day compressive strength of 2000 psi, unless otherwise directed by the contracting officer. Payment therefor will be made in conformance with the CHANGES clause of the CONTRACT CLAUSES. Satisfactory material removed below the depths indicated without specific direction of the Contracting Officer shall be replaced at no additional cost to the Government to the indicated excavation grade with satisfactory materials, except that concrete footings shall be increased in thickness to the bottom of the overdepth excavations. Satisfactory material shall be placed and compacted as specified in paragraph FILLING AND BACKFILLING. Determination of elevations and measurements of approved overdepth excavation of unsatisfactory material below grades indicated shall be done under the direction of the Contracting Officer.

3.4 DRAINAGE AND DEWATERING

3.4.1 Drainage

Surface water shall be directed away from excavation and construction sites so as to prevent erosion and undermining of foundations. Diversion ditches, dikes and grading shall be provided and maintained as necessary during construction. Excavated slopes and backfill surfaces shall be protected to prevent erosion and sloughing. Excavation shall be performed so that the site and the area immediately surrounding the site and affecting operations at the site shall be continually and effectively drained.

3.4.2 Dewatering

Groundwater flowing toward or into excavations shall be controlled to prevent sloughing of excavation slopes and walls, boils, uplift and heave in the excavation and to eliminate interference with orderly progress of construction. French drains, sumps, ditches or trenches will not be permitted within 900 mm of the foundation of any structure, except with specific written approval, and after specific contractual provisions for restoration of the foundation area have been made. Control measures shall be taken by the time the excavation reaches the water level in order to maintain the integrity of the in situ material. While the excavation is open, the water level shall be maintained continuously, at least 1.5 meters below the working level. The contractor shall note the subsurface water level recorded and date when this level was recorded on the boring logs shown on the contract documents. These water levels are only for the dates shown on the logs and it can be expected that the water table may fluctuate to some extent.

3.5 SHORING

Shoring, including sheet piling, shall be furnished and installed as necessary to protect workmen, banks, adjacent paving, structures, and utilities. Shoring, bracing, and sheeting shall be removed as excavations are backfilled, in a manner to prevent caving.

3.6 CLASSIFICATION OF EXCAVATION

Excavation will be unclassified regardless of the nature of material encountered.

3.7 BLASTING

Blasting will not be permitted.

3.8 UTILITY AND DRAIN TRENCHES

Trenches for underground utilities systems and drain lines shall be excavated to the required alignments and depths. The bottoms of trenches shall be graded to secure the required slope and shall be tamped if necessary to provide a firm pipe bed. Recesses shall be excavated to accommodate bells and joints so that pipe will be uniformly supported for the entire length.

3.9 BORROW

Satisfactory fill materials are not available in sufficient quantity from required excavations. Therefore, approved materials shall be obtained from borrow sources located outside the limits of Government-controlled land at the contracors expenseas specified in paragraph Borrow Areas.

3.10 EXCAVATED MATERIALS

Satisfactory excavated material required for fill or backfill shall be placed in the proper section of the permanent work required under this section or shall be separately stockpiled if it cannot be readily placed. Satisfactory material in excess of that required for the permanent work and all unsatisfactory material shall be disposed of as specified in paragraph Spoil Areas.

3.11 FINAL GRADE OF SURFACES TO SUPPORT CONCRETE

Excavation to final grade shall not be made until just before concrete is to be placed.

3.12 SUBGRADE PREPARATION

Unsatisfactory material in surfaces to receive fill or in excavated areas shall be removed and replaced with satisfactory materials. The surface shall be scarified to a depth of 150 mm before the fill is started. Sloped surfaces steeper than 1 vertical to 4 horizontal shall be plowed, stepped, benched, or broken up so that the fill material will bond with the existing material. When subgrades are less than the specified density, the ground surface shall be broken up to a minimum depth of 150 mm, pulverized, and compacted to the specified density. When the subgrade is part fill and part excavation or natural ground, the excavated or natural ground portion shall be scarified to a depth of 300 mm and compacted as specified for the adjacent fill. Material shall not be placed on surfaces that are muddy, frozen, or contain frost. Compaction shall be accomplished by sheepsfoot rollers, pneumatic-tired rollers, steel-wheeled rollers, or other approved equipment well suited to the soil being compacted. Material shall be moistened or aerated to plus or minus 2 percent of optimum moisture. Minimum subgrade density shall be as specified in paragraph FILLING AND BACKFILLING.

3.13 FILLING AND BACKFILLING

Satisfactory materials shall be used in bringing fills and backfills to the lines and grades indicated and for replacing unsatisfactory materials. Satisfactory materials shall be placed in horizontal layers not exceeding 200 mm in loose thickness, or 150 mm when hand-operated compactors are used. After placing, each layer shall be plowed, disked, or otherwise broken up, moistened or aerated as necessary to obtain plus or minus 2 percent of optimum moisture, thoroughly mixed and compacted as specified. Backfilling shall not begin until construction below finish grade has been approved, underground utilities systems have been inspected, tested and approved, forms removed, and the excavation cleaned of trash and debris. Backfill shall be brought to indicated finish grade.. Backfill shall not be placed in wet or frozen areas. Where pipe is coated or wrapped for protection against corrosion, the backfill material up to an elevation 600 mm above sewer lines and 300 mm above other utility lines shall be free from stones larger than 25.4 mm in any dimension. Heavy equipment for spreading and compacting backfill shall not be operated closer to foundation or retaining walls than a distance equal to the height of backfill above the top of footing; the area remaining shall be compacted in layers not more than 100 mm in compacted thickness with power-driven hand tampers suitable for the material being compacted. Backfill shall be placed carefully around pipes or tanks to avoid damage to coatings, wrappings, or tanks. Backfill shall not be placed against foundation walls prior to 7 days after completion of the walls. As far as practicable, backfill shall be brought up evenly on each side of the wall and sloped to drain away from the wall. Each layer of fill and backfill shall be compacted to not less than the percentage of maximum density specified below:

	Percent Laboratory maximum density	
	Cohesive material	Cohesionless material
Fill, embankment, and backfill		
Under structures, building slabs, steps, paved areas and in trenches	90	95
Under sidewalks and grassed areas	85	90
Subgrade		
Under fill/backfill building slabs, steps, and paved areas, top 300 mm	90	95
Under sidewalks, top 150 mm	85	90
Excavated Areas, except footings*	90	95

* Subgrade beneath foundations shall not be compacted or otherwise disturbed except to overexcavate existing foundations and replace with overexcavation backfill (2000 psi concrete) as indicated in specification section 02230.

Approved compacted subgrades that are disturbed by the Contractor's operations or adverse weather shall be scarified and compacted as specified herein before to the required density prior to further construction thereon. Recompaction over underground utilities and heating lines shall be by hand tamping.

3.14 TESTING

Testing shall be the responsibility of the Contractor and shall be performed at no additional cost to the Government. Testing shall be performed by an approved commercial testing laboratory or may be performed by the Contractor subject to approval. Field in-place density shall be determined in accordance with ASTM D 1556, , or ASTM D 2922. When ASTM D 2922 is used, the calibration curves shall be checked and adjusted if necessary by the procedure described in ASTM D 2922, paragraph ADJUSTING CALIBRATION CURVE. ASTM D 2922results in a wet unit weight of soil and when using this method ASTM D 3017 shall be used to determine the moisture content of the soil. The calibration curves furnished with the moisture gauges shall also be checked along with density calibration checks as described in ASTM D 3017. The calibration checks of both the density and moisture gauges shall be made at the beginning of a job on each different type of material encountered and at intervals as directed by the Contracting Officer. ASTM D 2937 shall be used only for soft, fine-grained, cohesive soils. Approved compacted subgrades that are disturbed by contractor's operations or adverse weather shall be scarified and compacted as specified hereinbefore to the required density prior to

further construction thereon. Recompaction over underground utilities and heating lines shall be by hand tamping. Sieve analyses shall be performed in accordance with ASTM C 117, ASTM C 127, ASTM C 128, ASTM C 136, and ASTM D 422; sieves shall conform to ASTM E 11; and liquid limit and plasticity index determinations shall be performed in accordance with ASTM D 4318. Copies of test results shall be furnished to the Contracting Officer. The following minimum testing at locations selected by the Contracting Officer is required:

3.14.1 Subgrade, Fill and Backfill Material Gradation

One sieve analysis and one liquid limit and plasticity index determination for cohesive soils per 1500 square meters or fraction thereof of subgrade and per 1700 cubic meters or fraction thereof of fill and backfill. Additional gradation, liquid limit, plasticity index determinations, and moisture-density curves shall be required if there are any changes in gradation or particle shape or when any change occurs in the material which may effect the optimum moisture content or maximum laboratory density.

3.14.2 In-Place Densities

3.14.2.1 In-Place Density of Subgrades

One test per 300 square meters or fraction thereof. Also, one test per 30 meters or fraction thereof shall be completed adjacent to wall footings and one test shall be completed adjacent to each column footing.

3.14.2.2 In-Place Density of Fills and Backfills

One test per 300 square meters or fraction thereof of each lift for fill or backfill areas compacted by other than hand or hand-operated machines. Also, one test per 30 meters or fraction thereof shall be completed adjacent to wall footings and one test shall be completed adjacent to each column footing. The number of field density tests shall be doubled in areas where compaction is accomplished by hand operated machines.

3.14.3 Check Tests on In-Place Densities

If ASTM D 2922 is used, in-place densities shall be checked by ASTM D 1556 as indicated in the following paragraphs.

3.14.3.1 Check Tests on Subgrade

One check test per 2500 square meters of subgrade or fraction thereof. Also, one test per 150 meters or fraction thereof shall be completed adjacent to wall footings and one test per 5 column footings taken adjacent to the column footing shall be completed. The number of field density tests shall be doubled in areas where compaction is accomplished by hand operated machines.

3.14.3.2 Check Tests on Fill and Backfill

One check test per lift for each 2500 square meters of fill or backfill. Also, one test per 150 meters or fraction thereof shall be completed adjacent to wall footings and one test per 5 column footings taken adjacent to the column footing shall be completed. The number of field density tests shall be doubled in areas where compaction is accomplished by hand operated machines.

3.14.4 Moisture Content

In the stockpile, excavation or borrow areas, a minimum of two tests per day per type of material or source of materials being placed is required during stable weather conditions. During unstable weather, tests shall be made as dictated by local conditions and approved moisture content shall be tested in accordance with ASTM D 2216. A minimum of one test per 1500 square yards or fraction thereof of the subgrade prior to placement of fill or backfill thereon during stable weather conditions.

3.14.5 Optimum Moisture and Laboratory Maximum Density

Tests shall be made for each type material or source of material including borrow material to determine the optimum moisture and laboratory maximum density values. One representative test shall be done for each type of subgrade material (embankment, fill and cut areas); and one test per 3000 cubic meters of fill and backfill, or fraction thereof.

3.14.6 Additional Testing

Additional gradation, liquid limit, plasticity index determinations, and moisture-density curves shall be required if there is any change in gradation or particle shape or when any change occurs in the material which may affect the optimum moisture content or laboratory maximum density.

3.15 AGGREGATE BENEATH SLABS ON GRADE

3.15.1 Capillary Water Barrier

Capillary water barrier under concrete floor and area-way slabs on grade shall be placed directly on the subgrade and shall be compacted with a minimum of two passes of a hand-operated plate-type vibratory compactor.

3.15.2 Base Course Under Interior Concrete Pavements

Interior slabs on grade subject to vehicular traffic are designated as "Interior Pavements" on the drawings. Base course shall be placed and compacted under these interior pavements as specified in SECTION 02714 EXTERIOR PAVEMENT DRAINAGE LAYER AND INTERIOR PAVEMENT BASE COURSE.

3.16 GRADING

Areas within 1.5 meters outside of each building and structure line shall be constructed true-to-grade, shaped to drain, and shall be maintained free of trash and debris until final inspection has been completed and the work has been accepted.

3.17 SPREADING TOPSOIL

Areas outside the building lines from which topsoil has been removed shall be topsoiled. The surface shall be free of materials that would hinder planting or maintenance operations. The subgrade shall be pulverized to a depth of 50 mm by disking or plowing for the bonding of topsoil with the subsoil. Topsoil shall then be uniformly spread, graded, and compacted to the thickness, elevations, slopes shown, and left free of surface irregularities. Topsoil shall be compacted by one pass of a cultipacker, roller, or other approved equipment weighing 1.46 kN/m to 2.34 kN/m of roller. Topsoil shall not be placed when the subgrade is frozen, excessively wet, extremely dry, or in a condition otherwise detrimental to

seeding, planting, or proper grading.

3.18 PROTECTION

Settlement or washing that occurs in graded, topsoiled, or backfilled areas prior to acceptance of the work shall be repaired and grades reestablished to the required elevations and slopes.

-- End of Section --

SECTION 02230

CLEARING AND STRIPPING (GRUBBING), OVEREXCAVATION, AND OVEREXCAVATION BACKFILL

PART 1 GENERAL

1.1 DEFINITIONS

1.1.1 Clearing

Clearing shall consist of the removal and disposal of asphalt paving and base course materials (Chisolm Avenue), concrete structures (excluding existing building foundations); the felling, trimming, and cutting of trees into sections and the satisfactory disposal of the trees and other vegetation designated for removal, including down timber, snags, brush, and rubbish exposed at the surface as indicated on the contract drawings and which encroaches upon or otherwise obstructs the work.

1.1.2 Stripping (Grubbing)

Stripping (Grubbing) shall consist of the removal of concrete structures (excluding existing building foundations), asphalt pavements and base course materials and existing utilities as indicated on the contract drawings (Demolition Plan). Stripping (Grubbing) shall also include topsoil, stumps larger than 75 millimeters in diameter, and any other material not suitable for foundation and pavement purposes encountered down to the depth specified in paragraph STRIPPING (GRUBBING) of Part 3 - EXECUTION. The stripping operation shall also include the stockpiling of topsoil for reuse in required final grassed areas; and the disposal of excess topsoil, and disposal of any of the above materials encountered during the stripping operation. Topsoil shall be kept free from other excavated materials, brush, litter, objectionable weeds, roots, stones larger than 2 inches in diameter, and other materials that would interfere with planting and maintenance operations.

1.1.3 Overexcavation Materials

Based on existing as-built drawings, soldier barracks were previously located within the construction limits of the proposed project. Therefore, it is suspected that the foundations from these structures may still be present beneath the ground surface. Overexcavation shall consist solely of the authorized excavation of these existing foundations as well as organic, unstable, or otherwise unsatisfactory material, as determined by the Contracting Officer where encountered below the hereinafter specified stripping depth. The Contracting Officer shall be notified as soon as such materials are encountered, and all such overexcavation shall be performed at the direction of and in the presence of the Contracting Officer. Refer to overexcavation and backfill requirements in paragraph OVEREXCAVATION AND BACKFILL. Existing pavements and base course materials and existing utilities to be demolished (as indicated on the contract drawings) are to be removed in their entirety as part of the clearing operation. Therefore, removal of any portion of these items below the hereinafter specified stripping depth shall be considered part of the required removal of these items and will not be considered to be overexcavation.

1.1.4 Overexcavation Backfill Materials

Overexcavation backfill material shall consist of satisfactory fill and backfill material or 2000 psi concrete (concrete with a 28-day compressive strength of 2000 psi is required beneath proposed building foundations as indicated in specification 02221 paragraph EXCAVATION), meeting the requirements specified in SECTIONS: 02221, EXCAVATION, FILLING, AND BACKFILLING FOR BUILDINGS; 02316, EXCAVATION, TRENCHING, AND BACKFILLING FOR UTILITIES SYSTEMS; and 02300, SITE GRADING AND EARTHWORK FOR ROADWAYS as appropriate. Where approved overexcavation of existing foundations, organic, unstable, or otherwise unsatisfactory material is completed beneath proposed column footings, the lateral limits of the overexcavation and backfill shall extend 2 meters beyond the outer dimensions of the proposed column foundations to ensure that these column footings do not bear partially upon overexcavation backfill materials (2000 psi concrete per specification 02221) and virgin in-situ materials.

1.2 MEASUREMENT

1.2.1 Overexcavation and Overexcavation Backfill

1.2.1.1 General

Separate measurement and payment will only be made for overexcavation and overexcavation backfill as hereinafter specified. All other items of work in this section shall be included in the lump sum price per job under the appropriate Base Bid of the unit price schedule.

1.2.1.2 Presence of Contracting Officer

All measurements shall be made in the presence of the Contracting Officer.

1.2.1.3 Protection of Records

The Contractor shall preserve all excavations in good condition until final measurement and until the records have been examined and accepted.

1.2.1.4 Overexcavation

The unit of measurement for overexcavation will be the cubic meter. Overexcavation to be paid for will be the number of cubic meters excavated, measured in the original position; and computed by the average end-area method. Measurements will only include authorized overexcavation materials, as herein before defined, which are encountered below the depth specified hereinafter in paragraph STRIPPING (GRUBBING). Overexcavation will be measured for payment on the basis of the number of in-place cubic meters of material actually removed between the excavated surface obtained by the specified clearing and stripping operation, and the depths and lateral limits directed by the Contracting Officer.

1.2.1.5 Overexcavation Backfill

The unit of measurement for overexcavation backfill will be the cubic meter. Cubic meters of backfill to be paid for will be the number of cubic meters of specified backfill material (or concrete if backfill required beneath proposed foundations), satisfactorily placed within the herein before specified limits of overexcavation, measured in final compacted in-place position, and computed by the average end-area method. Measurements will only include satisfactory overexcavation backfill conforming to the requirements specified hereinafter in paragraphs

OVEREXCAVATION BACKFILL MATERIAL and OVEREXCAVATION AND BACKFILL.

1.3 PAYMENT

1.3.1 Paid Overexcavation

Authorized overexcavation will be paid for at the contract unit price per cubic meter under payment Item No. 02100-1, "OVEREXCAVATION," of the Unit Price Schedule. This payment will constitute full compensation for all labor, equipment, tools, supplies, materials, and incidentals necessary to complete the work, including pneumatic hammers or other mechanical or hydraulic splitting equipment necessary to break up concrete; and the disposal of all overexcavation material.

1.3.2 Paid Overexcavation Backfill

Authorized overexcavation backfill will be paid for at the contract unit price per cubic meter under payment Item No. 02100-2, "OVEREXCAVATION BACKFILL," of the Unit Price Schedule. This payment will constitute full compensation for all labor, equipment, tools, supplies, materials, and incidentals necessary to complete the work.

PART 2 PRODUCTS (Not Applicable)

PART 3 EXECUTION

3.1 CLEARING

Trees, stumps, roots, brush, and other vegetation in areas to be cleared shall be cut off flush with or below the original ground surface as necessary to meet final grading requirements in overlot areas and removed in their entirety within paved and building limits; except such trees and vegetation as may be indicated or directed to be left standing. Trees designated on the contract drawings to be left standing shall be trimmed of dead branches 40 mm or more in diameter and shall be trimmed of all branches the heights indicated or directed. Limbs and branches to be trimmed shall be neatly cut close to the bole of the tree or main branches. Cuts more than 40 mm in diameter shall be painted with an approved tree-wound paint. Trees and vegetation to be left standing shall be protected from damage incident to clearing, grubbing, and construction operations by the erection of barriers or by such other means as the circumstances require.

3.2 GRUBBING

Material to be grubbed, together with logs and other organic or metallic debris not suitable for foundation purposes, shall be removed to a depth of not less than 300 mm below the original surface level of the groundin areas indicated as construction areas under this contract, such as areas for buildings, and areas to be paved except that tree roots and existing utilities (as designated on the contract drawings) within the building footprint and beneath pavements shall be removed in their entirety. Depressions made by grubbing shall be filled with satisfactory backfill materials placed and compacted to make the surface conform with the original adjacent surface of the ground as specified in sections 02221, EXCAVATION, FILLING, AND BACKFILLING FOR BUILDINGS; 02316, EXCAVATION, TRENCHING, AND BACKFILLING FOR UTILITIES SYSTEMS; and 02300, SITE GRADING AND EARTHWORK FOR ROADWAYS as appropriate. All depressions located beneath proposed foundations shall be backfilled with concrete as indicated in

specification section 02221 paragraph EXCAVATION.

3.3 TREE REMOVAL

Where indicated or directed, trees and stumps that are designated as trees shall be removed from areas outside those areas designated for clearing and grubbing. This work shall include the felling of such trees and the removal of their stumps and roots as specified in paragraph GRUBBING. Trees shall be disposed of as specified in paragraph DISPOSAL OF MATERIALS.

3.4 DISPOSAL OF MATERIALS

Cleared, stripped (grubbed) and overexcavated materials (exclusive of the stripped topsoil) shall be disposed of in spoil areas located outside the limits of Government-controlled land at the contractor's expense and responsibility. Any excess topsoil beyond that required for final grassed areas shall be disposed of in spoil areas located outside the limits of Government-controlled land at the contractor's expense and responsibility

-- End of Section --

SECTION 02300

SITE GRADING AND EARTHWORK FOR ROADWAYS

PART 1 GENERAL

1.1 REFERENCES

The publications listed below form a part of this specification to the extent referenced. The publications are referred to in the text by basic designation only and represents the latest edition in force when this contract is awarded.

AMERICAN SOCIETY FOR TESTING AND MATERIALS (ASTM)

ASTM C 117	Materials Finer than 75 um (No. 200) Sieve in Mineral Aggregates by Washing
ASTM C 127	Specific Gravity and Absorption of Coarse Aggregates
ASTM C 128	Specific Gravity and Absorption of Fine Aggregates
ASTM C 136	Sieve Analysis of Fine and Coarse Aggregates
ASTM D 422	Particle-Size Analysis of Soils
ASTM D 1140	Amount of Material in Soils Finer than the No. 200 (75-micrometer) Sieve
ASTM D 1556	Density and Unit Weight of Soil in Place by the Sand-Cone Method
ASTM D 1557	Laboratory Compaction Characteristics of Soil Using Modified Effort (56,000 ft-lbf/cu. ft. (2,700 kN-m/cu. m.))
ASTM D 2487	Classification of Soils for Engineering Purposes (Unified Soil Classification System)
ASTM D 2922	Density of Soil and Soil-Aggregate in Place by Nuclear Methods (Shallow Depth)
ASTM D 3017	Water Content of Soil and Rock in Place by Nuclear Methods (Shallow Depth)
ASTM D 4318	Liquid Limit, Plastic Limit, and Plasticity Index of Soils
ASTM E 11	Wire-Cloth Sieves for Testing Purposes

1.2 DEFINITIONS

1.2.1 Satisfactory Materials

This paragraph covers the material requirements outside the building limits. The requirements for fill, embankment, and backfill within the building lines of structures, and for a distance of 1.5 meters outside the building lines are specified in SECTION 02221 EXCAVATION, FILLING, AND BACKFILLING FOR BUILDINGS.

1.2.1.1 Fill, Embankment and Backfill

a. Paved Areas: Fill, embankment, and backfill beneath paved areas and within a distance of 3 meters plus 4 times the height of the embankment outside these paved areas shall be those materials classified in ASTM D 2487 as GM, GC, SW, SM, SC, SP-SC, SP-SM, or combinations thereof with a maximum particle size of 75 millimeters, properly worked by the contractor to obtain the specified compaction while maintaining the moisture content as specified hereinafter. SP materials without a sufficient amount of clay and silt size particles shall not be used in these areas due to compaction difficulties. Satisfactory materials may also include CL, ML, or combinations thereof, properly worked by the contractor to obtain the specified compaction while maintaining the moisture content as specified hereinafter. The contractor should, however, be aware of the possible construction difficulties and the very close moisture control required in the proper field placement and compaction of these latter materials as compared to the previously classified materials. Satisfactory materials shall also be free of trash, debris, roots or other organic matter, or stones larger than 75 mm in any dimension.

b. Other Areas: Fill, embankment, and backfill in other areas shall be those materials classified in ASTM D 2487 as GW, GP, GM, GC, SW, SM, SC, or combinations thereof with a maximum particle size of 75 millimeters, properly worked by the contractor to obtain the specified compaction while maintaining the moisture content specified hereinafter. Satisfactory materials may also include SP, CL, ML, or combinations thereof, properly worked by the contractor to obtain the specified compaction while maintaining the moisture content specified hereinafter; however, the contractor shall be aware of the possible construction difficulties and the very close moisture control required in the proper field placement and compaction of these latter materials as compared to the previous classified materials.

1.2.1.2 Subgrade

a. Paved Areas: Satisfactory materials for the subgrade beneath paved areas and within a distance of 3 meters plus 4 times the height of the embankment outside these paved areas shall consist of all subgrade soils except as specified hereinafter in paragraph Unsatisfactory Materials, Subgrade.

b. Other Areas: Satisfactory materials for subgrade in other areas shall consist of all subgrade soils except as specified hereinafter in paragraph Unsatisfactory Materials, Subgrade.

1.2.2 Unsatisfactory Materials

This paragraph covers the material requirements outside the building

limits. The requirements for fill, embankment, and backfill within the building lines of structures, and for a distance of 1.5 meters outside the building lines are specified in SECTION 02221 EXCAVATION, FILLING, AND BACKFILLING FOR BUILDINGS.

1.2.2.1 Fill, Embankment and Backfill

Unsatisfactory materials for fill, embankment, and backfill within the building lines of structures, beneath appurtenant structures, and beneath paved areas, and in other areas shall be those materials not meeting the requirements of the Satisfactory Materials as defined above within these areas, respectively. In addition, materials classified in ASTM D 2487 as Pt, OH and OL or combinations thereof are unsatisfactory.

1.2.2.2 Subgrade

a. General: Satisfactory subgrade soils which are rendered unsuitable by the contractor due to inadequate site and/or excavation drainage or due to negligence on the part of the contractor by working (remolding) or compacting otherwise satisfactory in-place subgrade soils under adverse moisture conditions shall be removed and replaced with satisfactory fill materials, or shall be worked or altered until rendered suitable at no additional cost to the Government.

b. Paved Areas: Unsatisfactory materials for the subgrade beneath paved areas and within a distance of 3 meters plus 4 times the height of the embankment outside these paved areas shall be those materials classified in ASTM D 2487 as Pt, OH, and OL, or combinations thereof. Unsatisfactory materials also include man-made fills; trash; refuse; backfills from previous construction; and material which contains roots and other organic matter or frozen material.

c. Other Areas: Unsatisfactory materials for the subgrade in other areas shall be those materials classified in ASTM D 2487 as Pt, OH, and OL, or combinations thereof. Unsatisfactory materials also include man-made fills; trash; refuse; backfills from previous construction; and material which contains roots and other organic matter or frozen material.

1.2.3 Cohesionless and Cohesive Materials

Cohesionless materials include materials classified in ASTM D 2487 as GW, GP, SW, and SP. Cohesive materials include materials classified as GC, SC, ML, CL, MH, and CH. Materials classified as GM and SM will be identified as cohesionless only when the fines are nonplastic. Testing required for classifying materials shall be in accordance with ASTM D 4318, ASTM C 136, ASTM D 422, and ASTM D 1140.

1.2.4 Degree of Compaction

Degree of compaction required is expressed as a percentage of the maximum density obtained by the test procedure presented in ASTM D 1557, Procedure C abbreviated as a percent of laboratory maximum density.

1.3 SUBMITTALS

Government approval is required for submittals with a "GA" designation;

submittals having an "FIO" designation are for information only. The following shall be submitted in accordance with Section 01330 SUBMITTAL PROCEDURES:

SD-08 Statements

Earthwork; FIO;AR.

Procedure and location for disposal of unused satisfactory material. Proposed source of borrow material.

SD-09 Reports

Testing; FIO;AR.

Within 24 hours of conclusion of physical tests, 3 copies of test results, including calibration curves and results of calibration tests.

SD-13 Certificates

Testing; FIO;AR.

Qualifications of the commercial testing laboratory or Contractor's testing facilities.

SD-18 Records

Earthwork; FIO;AR.

1.4 SUBSURFACE DATA

Subsurface soil boring logs are shown on the contract drawings. The subsoil investigation report and samples of materials taken from subsurface investigations may be examined as indicated in specification section 01050 JOB CONDITIONS, paragraph 1.2.2 Explorations. These data represent the best subsurface information available; however, variations may exist in the subsurface between boring locations.

1.5 CLASSIFICATION OF EXCAVATION

No consideration will be given to the nature of the materials, and all excavation will be designated as unclassified excavation.

1.6 BLASTING

Blasting will not be permitted.

1.7 UTILIZATION OF EXCAVATED MATERIALS

Unsatisfactory materials removed from excavations shall be disposed of in the spoil areas indicated in paragraph SPOIL AREAS. Satisfactory material removed from excavations shall be used, insofar as practicable, in the construction of fills, embankments, subgrades, shoulders, bedding (as backfill), and for similar purposes. No satisfactory excavated material shall be wasted without specific written authorization. Satisfactory material authorized to be wasted shall be disposed of in the spoil areas indicated in paragraph SPOIL AREAS. Newly designated waste areas on Government-controlled land shall be cleared and grubbed before disposal of waste material thereon. No excavated material shall be disposed of to

obstruct the flow of any stream, endanger a partly finished structure, impair the efficiency or appearance of any structure, or be detrimental to the completed work in any way.

1.8 SPOIL AREAS

Spoil materials shall be disposed of in spoil areas located outside the limits of Government-controlled land at the contractor's expense and responsibility.

1.9 BORROW AREAS

Satisfactory fill materials are not available in sufficient quantity from required excavations, therefore approved materials shall be obtained from approved sources outside the limits of Government-controlled land at the Contractor's expense and responsibility. Relatively large amounts of satisfactory fill materials will be required from off-site sources at the expense and responsibility of the contractor. Therefore, to eliminate damage to Ernie Pyle Street and 10th Street from loadings due to the dump trucks, all dump trucks shall enter and leave the construction site from the north end of the site via Chisolm Avenue at Mapes Road (reference contract drawings).

PART 2 PRODUCTS (Not Applicable)

PART 3 EXECUTION

3.1 STRIPPING OF TOPSOIL

Where indicated or directed, topsoil shall be stripped to a depth to remove all in-place topsoil. This depth varies from 100 to 300 millimeters (reference boring logs) below existing grade. Topsoil shall be spread on areas already graded and prepared for topsoil, or transported and deposited in stockpiles convenient to areas that are to receive application of the topsoil later, or at locations indicated or specified. Topsoil shall be kept separate from other excavated materials, brush, litter, objectionable weeds, roots, stones larger than 50 mm in diameter, and other materials that would interfere with planting and maintenance operations. Any surplus of topsoil from excavations and grading shall be removed from the site unless otherwise directed by the Contracting Officer.

3.2 GENERAL EXCAVATION

The Contractor shall perform excavation of every type of material encountered within the limits of the project to the lines, grades, and elevations indicated and as specified. Grading shall be in conformity with the typical sections shown and the tolerances specified in paragraph FINISHING. Satisfactory excavated materials shall be transported to and placed in fill or embankment within the limits of the work. Unsatisfactory materials encountered within the limits of the work shall be excavated below grade and replaced with satisfactory materials as directed. Such excavated material and the satisfactory material ordered as replacement shall be included in excavation. Surplus satisfactory excavated material not required for fill or embankment shall be disposed of in the spoil areas indicated in paragraph SPOIL AREAS. Unsatisfactory excavated material shall be disposed of in the spoil areas indicated in paragraph SPOIL AREAS.

During construction, excavation and fill shall be performed in a manner and sequence that will provide proper drainage at all times. Material required for fill or embankment in excess of that produced by excavation within the grading limits shall be excavated from the borrow areas indicated or from other approved areas selected by the Contractor as specified.

3.2.1 Ditches, Gutters, and Channel Changes

Excavation of ditches, gutters, and channel changes shall be accomplished by cutting accurately to the cross sections, grades, and elevations shown. Ditches and gutters shall not be excavated below grades shown. Excessive open ditch or gutter excavation shall be backfilled with satisfactory, thoroughly compacted, material or with suitable stone or cobble to grades shown. Material excavated shall be disposed of as shown or as directed, except that in no case shall material be deposited less than 1 meter from the edge of a ditch. The Contractor shall maintain excavations free from detrimental quantities of leaves, brush, sticks, trash, and other debris until final acceptance of the work.

3.2.2 Drainage Structures

Excavations shall be made to the lines, grades, and elevations shown, or as directed. Trenches and foundation pits shall be of sufficient size to permit the placement and removal of forms for the full length and width of structure footings and foundations as shown. When concrete or masonry is to be placed in an excavated area, the bottom of the excavation shall not be disturbed. Excavation to the final grade level shall not be made until just before the concrete or masonry is to be placed.

3.3 SELECTION OF BORROW MATERIAL

Approved borrow material shall be obtained from borrow areas as specified in paragraph BORROW AREAS.

3.4 BACKFILL

Backfill adjacent to any and all types of structures shall be placed and compacted to at least 90 percent laboratory maximum density for cohesive materials or 95 percent laboratory maximum density for cohesionless materials at an in place moisture content within plus or minus 2 percent of optimum, in such a manner as to prevent wedging action or eccentric loading upon or against the structure. Ground surface on which backfill is to be placed shall be prepared as specified in paragraph PREPARATION OF GROUND SURFACE FOR EMBANKMENTS. Compaction requirements for backfill materials shall also conform to the applicable portions of paragraphs PREPARATION OF GROUND SURFACE FOR EMBANKMENTS, EMBANKMENTS, and SUBGRADE PREPARATION, and Section 02720 STORM-DRAINAGE SYSTEM; and Section 02316 EXCAVATION, TRENCHING, AND BACKFILLING FOR UTILITIES SYSTEMS. Compaction shall be accomplished by sheepsfoot rollers, pneumatic-tired rollers, steel-wheeled rollers, vibratory compactors, or other approved equipment.

3.5 PREPARATION OF GROUND SURFACE FOR EMBANKMENTS

3.5.1 General Requirements

Ground surface on which fill is to be placed shall be stripped of live, dead, or decayed vegetation, rubbish, debris, and other unsatisfactory material; plowed, disked, or otherwise broken up ; pulverized; moistened or

aerated as necessary; to achieve an in place moisture content within plus or minus 2 percent of optimum; thoroughly mixed; and compacted to at least 90 percent laboratory maximum density for cohesive materials or 95 percent laboratory maximum density for cohesionless materials. Compaction shall be accomplished by sheepsfoot rollers, pneumatic-tired rollers, steel-wheeled rollers, vibratory compactors, or other approved equipment. The prepared ground surface shall be scarified and moistened or aerated as required just prior to placement of embankment materials to assure adequate bond between embankment material and the prepared ground surface.

3.5.2 Frozen Material

Embankment shall not be placed on a foundation which contains frozen material, or which has been subjected to freeze-thaw action. This prohibition encompasses all foundation types, including the natural ground, all prepared subgrades (whether in an excavation or on an embankment) and all layers of previously placed and compacted earth fill which become the foundations for successive layers of earth fill. All material that freezes or has been subjected to freeze-thaw action during the construction work, or during periods of temporary shutdowns, such as, but not limited to, nights, holidays, weekends, winter shutdowns, or earthwork operations, shall be removed to a depth that is acceptable to the Contracting Officer and replaced with new material. Alternatively, the material will be thawed, dried, reworked, and recompacted to the specified criteria before additional material is placed. The Contracting Officer will determine when placement of fill shall cease due to cold weather. The Contracting Officer may elect to use average daily air temperatures, and/or physical observation of the soils for his determination. Embankment material shall not contain frozen clumps of soil, snow, or ice.

3.6 EMBANKMENTS

3.6.1 Earth Embankments

Earth embankments shall be constructed from satisfactory materials free of organic or frozen material and rocks with any dimension greater than 75 mm. The material shall be placed in successive horizontal layers of loose material not more than 200 millimeters in depth. Each layer shall be spread uniformly on a soil surface that has been moistened or aerated as necessary and scarified or otherwise broken up in such a manner that the fill will bond with the surface on which it is placed. After spreading, each layer shall be plowed, disked, or otherwise broken up; moistened or aerated as necessary; to achieve an in place moisture content within plus or minus 2 percent of optimum; thoroughly mixed; and compacted to at least 90 percent laboratory maximum density for cohesive materials or 95 percent laboratory maximum density for cohesionless materials. Compaction requirements for the upper portion of earth embankments forming subgrade for pavements shall be identical with those requirements specified in paragraph SUBGRADE PREPARATION. Compaction shall be accomplished by sheepsfoot rollers, pneumatic-tired rollers, steel-wheeled rollers, vibratory compactors, or other approved equipment.

3.7 SUBGRADE PREPARATION

3.7.1 Construction

Subgrade shall be shaped to line, grade, and cross section, and compacted as specified. This operation shall include plowing, disking, and any moistening or aerating required to obtain specified compaction. Soft or

otherwise unsatisfactory material shall be removed and replaced with satisfactory excavated material or other approved material as directed. Low areas resulting from removal of unsatisfactory material shall be brought up to required grade with satisfactory materials, and the entire subgrade shall be shaped to line, grade, and cross section and compacted as specified. After rolling, the surface of the subgrade for roadways shall not show deviations greater than 12 millimeter when tested with a 3 meter straightedge applied both parallel and at right angles to the centerline of the area.The elevation of the finish subgrade shall not vary more than 15 mm from the established grade and cross section.

3.7.2 Compaction

Compaction shall be accomplished by sheepsfoot rollers, pneumatic-tired rollers, steel-wheeled rollers, vibratory compactors, or other approved equipment well suited to the type of material being compacted..

3.7.2.1 Subgrade for Pavements

The top 150 mm of subgrades shall be compacted to at least 90 percent laboratory maximum density for cohesive materials and to at least 95 percent laboratory maximum density for cohesionless materials. The subgrades shall be compacted at an in-place moisture content within plus or minus 2 percent of optimum.

3.7.2.2 Other Areas

Subgrades and each lift of fills shall be compacted to at least 85 percent of laboratory maximum density for cohesive materials and to at least 90 percent of laboratory maximum density for cohesionless materials at an in place moisture content within plus or minus 2 percent of optimum.

3.8 FINISHING

The surface of excavations, embankments, and subgrades shall be finished to a smooth and compact surface in accordance with the lines, grades, and cross sections or elevations shown. The degree of finish for graded areas shall be within 30 mm of the grades and elevations indicated except that the degree of finish for subgrades shall be specified in paragraph SUBGRADE PREPARATION. Gutters and ditches shall be finished in a manner that will result in effective drainage. The surface of areas to be turfed shall be finished to a smoothness suitable for the application of turfing materials.

3.9 PLACING TOPSOIL

On areas to receive topsoil, the surface shall be free of materials that would hinder planting or maintenance operations. The compacted subgrade soil shall be scarified to a 50 mm depth for bonding of topsoil with subsoil. Topsoil then shall be spread evenly to a thickness of 100 mm and graded to the elevations and slopes shown and left free of surface irregularities. Topsoil shall not be spread when frozen or excessively wet or dry or in a condition that is otherwise detrimental to seeding, planting, or proper grading. Topsoil shall be compacted by one pass of a cultipacker, roller, or other approved equipment weighing 145 to 240 kilograms per linear meter of roller. Material required for topsoil in excess of that produced by excavation within the grading limits shall be obtained from offsite areas.

3.10 TESTING

Testing shall be the responsibility of the Contractor and shall be performed at no additional cost to the Government. Testing shall be performed by an approved commercial testing laboratory or by the Contractor subject to approval. If the Contractor elects to establish testing facilities, no work requiring testing will be permitted until the Contractor's facilities have been inspected and approved by the Contracting Officer. The first inspection be at the expense of the Government. Cost incurred for any subsequent inspections required because of failure of the first inspection will be charged to the Contractor. Moisture-density relations shall be determined in accordance with ASTM D 1557, Procedure C Field in-place density shall be determined in accordance with ASTM D 1556 or ASTM D 2922. When ASTM D 2922 is used, the calibration curves shall be checked and adjusted using only the sand cone method as described in ASTM D 1556. ASTM D 2922 results in a wet unit weight of soil and when using this method ASTM D 3017 shall be used to determine the moisture content of the soil. The calibration curves furnished with the moisture gauges shall also be checked along with density calibration checks as described in ASTM D 3017 ; the calibration checks of both the density and moisture gauges shall be made at the beginning of a job on each different type of material encountered and at intervals as directed by the Contracting Officer. When test results indicate, as determined by the Contracting Officer, that compaction is not as specified, the material shall be removed, replaced and recompacted to meet specification requirements. Tests on recompacted areas shall be performed to determine conformance with specification requirements. Sieve analyses shall be performed in accordance with the latest ASTM C 117, ASTM C 127, ASTM C 128, ASTM C 136 and ASTM D 422; sieves shall conform to the latest ASTM E 11; and liquid limit and plasticity index determinations shall be performed in accordance with ASTM D 4318. Copies of these test results shall be furnished to the Contracting Officer. Inspections and test results shall be certified by a registered professional civil engineer. These certifications shall state that the tests and observations were performed by or under the direct supervision of the engineer and that the results are representative of the materials or conditions being certified by the tests. The following number of tests, if performed at the appropriate time, will be the minimum acceptable for each type operation.

3.10.1 Subgrade, Fill and Backfill Material Gradation

One sieve analysis and one liquid limit and plasticity index determination for cohesive soils per 2500 square meters or fraction thereof of subgrade and per 2500 cubic meters or fraction thereof of fill and backfill. Additional gradation, liquid limit, plasticity index determinations, and moisture-density curves shall be required if there are any changes in gradation or particle shape or when any change occurs in the material which may effect the optimum moisture content or maximum laboratory density.

3.10.2 In-Place Densities

a. Subgrade: One test per 1000 square meters, or fraction thereof of subgrade in paved areas. One test per 1500 square meters, or fraction thereof of subgrade in other areas.

b. Fill and Backfill: One test per 1000 square meters, or fraction thereof, of each lift of fill or backfill in paved areas. One test per 1500 square meters, or fraction thereof, of each lift of fill or backfill in other areas.

3.10.3 Check Tests on In-Place Densities

If ASTM D 2922 is used, in-place densities shall be checked by ASTM D 1556 as follows:

a. Subgrade (embankment, fill and cut areas): One check test per 4500 square meters, of subgrade or fraction thereof.

b. Fill and Backfill: One check test per lift for each 4500 square meters, of fill or backfill in paved areas. One check test per lift for each 8500 square meters, of fill or backfill in other areas.

3.10.4 Subgrade, Embankment, Fill or Backfill Areas compacted by Hand Operated Machines

The minimum number of field density tests and check tests specified above shall be doubled in areas where compaction is accomplished by hand-operated machines.

3.10.5 Moisture Contents

A minimum of one test per 2500 square meters or fraction thereof of the subgrade prior to placement of embankment, fill, or backfill thereon during stable weather conditions. In the stockpile, excavation, or borrow areas, a minimum of two tests per day per type of material or source of material being placed during stable weather conditions shall be performed. During unstable weather, tests shall be made as dictated by local conditions and approved by the Contracting Officer.

3.10.6 Optimum Moisture and Laboratory Maximum Density

Tests shall be made for each type material or source of material including borrow material to determine the optimum moisture and laboratory maximum density values. One representative test per 3000 cubic meters of fill and backfill, or when any change in material occurs which may affect the optimum moisture content or laboratory maximum density. One test shall be taken for each type of subgrade materials.

3.10.7 Tolerance Tests for Subgrades

Continuous checks on the degree of finish specified in paragraph SUBGRADE PREPARATION shall be made during construction of the subgrades.

3.11 SUBGRADE AND EMBANKMENT PROTECTION

During construction, embankments, excavations and other graded areas shall be kept shaped and drained. Ditches and drains along subgrade shall be maintained to drain effectively at all times. The finished subgrade shall not be disturbed by traffic or other operation and shall be protected and maintained by the Contractor in a satisfactory condition until subbase, base, or pavement is placed. The storage or stockpiling of materials on the finished subgrade will not be permitted. No subbase, base course, or pavement shall be laid until the subgrade has been checked and approved, and in no case shall subbase, base, or surfacing, pavement be placed on a muddy, spongy, or frozen subgrade. Any settlement or washing away that may occur from any cause, prior to acceptance, shall be repaired and grades re-established to the required elevations and slopes. All work shall be conducted in accordance with the environmental protection requirements of

the contract.

-- End of Section --

SECTION 02316

EXCAVATION, TRENCHING, AND BACKFILLING FOR UTILITIES SYSTEMS

PART 1 GENERAL

1.1 REFERENCES

The publications listed below form a part of this specification to the extent referenced. The publications are referred to in the text by basic designation only and represent the latest edition in force when this contract is awarded.

AMERICAN SOCIETY FOR TESTING AND MATERIALS (ASTM)

ASTM C 117	Materials Finer than 75 um (No. 200) Sieve in Mineral Aggregates by Washing
ASTM C 136	Sieve Analysis of Fine and Coarse Aggregates
ASTM D 422	Particle-Size Analysis of Soils
ASTM D 1556	Density and Unit Weight of Soil in Place by the Sand-Cone Method
ASTM D 1557	Laboratory Compaction Characteristics of Soil Using Modified Effort (56,000 ft-lbf/cu. ft. (2,700 kN-m/cu. m.))
ASTM D 2487	Classification of Soils for Engineering Purposes (Unified Soil Classification System)
ASTM D 2922	Density of Soil and Soil-Aggregate in Place by Nuclear Methods (Shallow Depth)
ASTM D 3017	Water Content of Soil and Rock in Place by Nuclear Methods (Shallow Depth)
ASTM E 11	Wire-Cloth Sieves for Testing Purposes

1.2 DEGREE OF COMPACTION

Degree of compaction shall be expressed as a percentage of the maximum density obtained by the test procedure presented in ASTM D 1557, Procedure C abbreviated hereinafter as percent laboratory maximum density.

1.3 SUBMITTALS

Government approval is required for submittals with a "GA" designation; submittals having an "FIO" designation are for information only. The following shall be submitted in accordance with Section 01330 SUBMITTAL PROCEDURES:

SD-09 Reports

Field Density Tests; FIO;AR. Testing of Backfill Materials; FIO;AR.

Copies of all laboratory and field test reports shall be submitted to the Contracting Officer within 24 hours of the completion of the test.
Dewatering Plan;GA|ED

Copies of plans and calculations for approval not less than 60 days before installation

Shoring and Bracing Plans;GA|ED

Copies of plans and calculations for approval not less than 60 days before installation

1.4 SPOIL AREAS

Spoil materials shall be disposed of in spoil areas located outside the limits of Government-controlled land at the contractor's expense and responsibility.

1.5 BORROW AREAS

Satisfactory fill materials are not available in sufficient quantity from required excavations, therefore approved materials shall be obtained from approved sources outside the limits of Government-controlled land at the Contractor's expense and responsibility. Since relatively large amounts of satisfactory fill materials may be required from off-site sources, to eliminate damage to Ernie Pyle Street and 10th Street from loadings due to the dump trucks, all dump trucks shall enter and leave the construction site from the north end of the site via Chisolm Avenue at Mapes Road (reference contract drawings).

PART 2 PRODUCTS

2.1 MATERIALS

2.1.1 Satisfactory Materials

2.1.1.1 Backfill

Satisfactory backfill materials for trenches shall be those materials classified in ASTM D 2487 as GW, GP, GM, GC, SW, SM, SC, or combinations thereof, properly worked by the Contractor to obtain the specified compaction while maintaining the moisture content as specified hereinafter; and may also include SP, CL, ML or combinations thereof, properly worked by the Contractor to obtain the specified compaction while maintaining the moisture content as specified hereinafter; however, the Contractor should be aware of the possible construction difficulties and the very close moisture control required in the proper field placement and compaction of these latter materials as compared to the previously classified materials. Satisfactory backfill materials for trenches under paved areas shall be those materials specified in the SATISFACTORY FILL MATERIALS paragraph in SECTION 02300 SITE GRADING AND EARTHWORK FOR ROADWAYS.

2.1.1.2 Subgrade

Satisfactory soils for the subgrade of trenches shall consist of all subgrade soils except as specified hereinafter in the paragraph UNSATISFACTORY MATERIALS, Subgrade.

2.1.2 Unsatisfactory Materials

2.1.2.1 Backfill

Unsatisfactory backfill materials for trenches shall be those materials not meeting the requirements of the SATISFACTORY BACKFILL MATERIALS paragraph.

2.1.2.2 Subgrade

a. General: Satisfactory subgrade soils that have inadequate site and/or excavation drainage or due to negligence on the part of the Contractor by working (remolding) or compacting otherwise satisfactory in place subgrade soils under adverse moisture conditions shall be removed and replaced with satisfactory fill material or worked or altered until rendered suitable as determined by the Contracting Officer at no additional cost to the Government.

b. Trenches: Unsatisfactory materials for the subgrade of trenches shall be those materials classified in ASTM D 2487 as Pt, OH, OL or combinations thereof. Unsatisfactory materials shall also include those materials containing roots and other organic matter, trash, debris, frozen materials, stones larger than 75 mm, and unstable and unyielding materials as defined hereinafter.

2.1.3 Cohesionless and Cohesive Materials

Cohesionless materials shall include materials classified in ASTM D 2487 as GW, GP, SW, and SP. Cohesive materials shall include materials classified as GC, SC, ML, CL, MH, and CH. Materials classified as GM and SM shall be identified as cohesionless only when the fines are nonplastic.

2.1.4 Classification of Excavation

All excavation shall be done on the unclassified basis. No consideration will be given to the nature of the material encountered.

2.1.5 Unyielding Material

Unyielding material shall consist of rock and gravelly soils with stones greater than 75 millimeters in any dimension or as defined by the pipe manufacturer, whichever is smaller.

2.1.6 Unstable Material

Unstable material shall consist of materials too wet to properly support the utility pipe, conduit, or appurtenant structure.

2.1.7 Select Granular Material

Select granular material shall consist of well-graded sand, gravel, crushed gravel, crushed stone or crushed slag composed of hard, tough and durable particles, and shall contain not more than 10 percent by weight of material passing a 0.075 mm mesh sieve and no less than 95 percent by weight passing

the 25 mm sieve. The maximum allowable aggregate size shall be 75 millimeters, or the maximum size recommended by the pipe manufacturer, whichever is smaller.

2.1.8 Initial Backfill Material

Initial backfill shall consist of select granular material or satisfactory backfill materials free from rocks 75 millimeters or larger in any dimension or free from rocks of such size as recommended by the pipe manufacturer, whichever is smaller. When the pipe is coated or wrapped for corrosion protection, the initial backfill material shall be free of stones larger than 25millimeters in any dimension or as recommended by the pipe manufacturer, whichever is smaller.

2.1.9 Bedding Material

When not indicated on the contract drawings, bedding shall consist of select granular materials.

2.1.10 Final Backfill Material

Final Backfill shall consist of Satisfactory Backfill Materials.

2.2 PLASTIC MARKING TAPE

Plastic marking tape shall be acid and alkali-resistant polyethylene film, 152 mm (6 inches) wide with minimum thickness of 0.102 mm (0.004 inch). Tape shall have a minimum strength of 12.1 MPa (1750 psi) lengthwise and 10.3 MPa (1500 psi) crosswise. The tape shall be manufactured with integral wires, foil backing or other means to enable detection by a metal detector when the tape is buried up to 1 meter deep. The tape shall be of a type specifically manufactured for marking and locating underground utilities. The metallic core of the tape shall be encased in a protective jacket or provided with other means to protect it from corrosion. Tape color shall be as specified in TABLE 1 and shall bear a continuous printed inscription describing the specific utility.

TABLE 1. Tape Color

Red:	Electric
Yellow:	Gas, Oil, Dangerous Materials
Orange:	Telephone, Telegraph, Television, Police, and Fire Communications
Blue:	Water Systems
Green:	Sewer Systems

PART 3 EXECUTION

3.1 EXCAVATION

Excavation shall be performed to the lines and grades indicated. During excavation, material satisfactory for backfilling shall be stockpiled in an orderly manner at a distance from the banks of the trench equal to 1/2 the depth of the excavation, but in no instance closer than 600 mm. Excavated material not required or not satisfactory for backfill shall be removed from the site as indicated in paragraph SPOIL AREAS. Grading shall be done as may be necessary to prevent surface water from flowing into the excavation, and any water accumulating therein shall be removed to maintain the stability of the bottom and sides of the excavation. Unauthorized

overexcavation shall be backfilled in accordance with paragraph BACKFILLING AND COMPACTION at no additional cost to the Government. Blasting will not be permitted.

3.1.1 Trench Excavation

The trench shall be excavated as indicated on the drawings or as recommended by the manufacturer of the pipe to be installed. Trench walls below the top of the pipe shall be sloped, or made vertical, and of such width as recommended in the manufacturer's installation manual. Where no manufacturer's installation manual is available, trench walls shall be made vertical. Trench walls more than 1.2 meters high shall be shored, cut back to a stable slope, or provided with equivalent means of protection for employees who may be exposed to moving ground or cave in. Vertical trench walls more than 1.2 meters high shall be shored. All excavation/shoring operations shall conform to the requirements contained in EM-1-1 "Safety and Health Requirements Manual". Trench walls which are cut back shall be excavated to at least the angle of repose of the soil. Special attention shall be given to slopes which may be adversely affected by weather or moisture content. When not indicated on the contract drawings or recommended by the pipe manufacturer, the trench width below the top of pipe shall not exceed 600 mm (24 inches) plus pipe outside diameter (O.D.) for pipes of less than 600 mm (24 inches) inside diameter and shall not exceed 900 mm (36 inches) plus pipe outside diameter for sizes larger than 600 mm (24 inches) inside diameter. Where recommended trench widths are exceeded, redesign, stronger pipe, or special installation procedures shall be utilized by the Contractor. The cost of redesign, stronger pipe, or special installation procedures shall be borne by the Contractor without any additional cost to the Government.

3.1.1.1 Bottom Preparation

The bottoms of trenches shall be accurately graded to provide uniform bearing and support for the bottom quadrant of each section of the pipe. Bell holes shall be excavated to the necessary size at each joint or coupling to eliminate point bearing. Stones of 75 millimeters or greater in any dimension, or as recommended by the pipe manufacturer, whichever is smaller, shall be removed to avoid point bearing.

3.1.1.2 Removal of Unyielding Material

Where unyielding material is encountered in the bottom of the trench, such material shall be removed to the level indicated on the contract drawings or to 100 millimeters below the required grade when not indicated on the contract drawings and replaced with suitable materials as provided in paragraph BACKFILLING AND COMPACTION.

3.1.1.3 Removal of Unstable Material and Unsatisfactory Material

a. Removal of Unstable Material: Where unstable material is encountered in the bottom of the trench, such material shall be removed to the depth directed and replaced to the proper grade with select granular material as provided in paragraph BACKFILLING AND COMPACTION. When removal of unstable material is required due to the Contractor's fault or neglect in performing the work, the resulting material shall be excavated and replaced by the Contractor without additional cost to the Government.

b. Removal of Unsatisfactory Material: Unsatisfactory material

encountered beyond the depths indicated shall be removed to the depths and lateral limits directed by the Contracting Officer and replaced with satisfactory material as provided in paragraph "BACKFILLING AND COMPACTION"; payment therefore will be made in accordance with the CHANGE clause of the CONTRACT CLAUSES. Determination of elevation of approved overdepth excavations shall be done in the presence of the Contacting Officer.

3.1.1.4 Excavation for Appurtenances

Excavation for manholes, catch-basins, inlets, or similar structures shall be of sufficient size to permit the placement and removal of forms for the full length and width of structure footings and foundations as shown. Removal of unstable material shall be as specified above. When concrete or masonry is to be placed in an excavated area, special care shall be taken not to disturb the bottom of the excavation. Excavation to the final grade level shall not be made until just before the concrete or masonry is to be placed.

3.1.1.5 Jacking, Boring, and Tunneling

Unless otherwise indicated, excavation shall be by open cut except that sections of a trench may be jacked, bored, or tunneled if, in the opinion of the Contracting Officer, the pipe, cable, or duct can be safely and properly installed and backfill can be properly compacted in such sections.

3.1.2 Stockpiles

Stockpiles of satisfactory , unsatisfactory and wasted materials shall be placed and graded as specified. Stockpiles shall be kept in a neat and well drained condition, giving due consideration to drainage at all times. The ground surface at stockpile locations shall be cleared, grubbed, and sealed by rubber-tired equipment, excavated satisfactory and unsatisfactory materials shall be separately stockpiled. Stockpiles of satisfactory materials shall be protected from contamination which may destroy the quality and fitness of the stockpiled material. If the Contractor fails to protect the stockpiles, and any material becomes unsatisfactory, such material shall be removed and replaced with satisfactory material from approved sources at no additional cost to the Government. Locations of stockpiles of satisfactory materials shall be subject to prior approval of the Contracting Officer.

3.1.3 Drainage and Dewatering

3.1.3.1 Drainage

Excavation shall be performed so that the area of the site and the area immediately surrounding the site and affecting operations at the site will be continually and effectively drained. Water shall not be permitted to accumulate in the excavation. The excavation shall be drained by pumping or other satisfactory methods to prevent softening of the subgrade or other actions detrimental to proper construction procedures. Surface water shall be directed away from excavation and construction sites so as to prevent erosion. Diversion ditches, dikes and grading shall be provided and maintained as necessary during construction. Excavated slopes and backfill surfaces shall be protected to prevent erosion and sloughing. Excavation shall be performed so that the site and the area immediately surrounding the site and affecting operations at the site shall be continually and effectively drained.

3.1.3.2 Dewatering

Excavation for trenches and drainage structures shall be performed so that the excavation will be continually and effectively drained. Water shall not be permitted to accumulate in any excavation. Groundwater flowing toward or into excavations shall be controlled to prevent sloughing of excavation slopes and walls, boils, uplift and heave in the excavation and to eliminate interference with orderly progress of construction. French drains, sumps, ditches or trenches will not be permitted within 1 meter of the foundation of any structure, except with specific written approval, and after specific contractual provisions for restoration of the foundation area have been made. Control measures shall be taken by the time the excavation reaches the water level in order to maintain the integrity of the in-situ material. While the excavation is open, the water level shall be maintained continuously, at least 1.5 meters below the working level.

3.2 BACKFILLING AND COMPACTION

Backfill shall be placed in layers not exceeding 150 mm loose thickness for compaction by hand operated machine compactors, and 200 mm loose thickness for other than hand operated machines, unless otherwise specified. Backfill shall be aerated or moistened as necessary to achieve an in-place moisture content within plus or minus 2 percent of optimum moisture. Each layer shall be compacted to at least 95 percent maximum density for cohesionless soils and 90 percent maximum density for cohesive soils, unless otherwise specified.

3.2.1 Trench Backfill

Trenches shall be backfilled to the grade shown. The trench shall be backfilled to 600 millimeters above the top of pipe prior to performing the required pressure tests. The joints and couplings shall be left uncovered during the pressure test. The trench shall not be backfilled until all specified tests are performed.

3.2.1.1 Replacement of Unyielding Material

Unyielding material removed from the bottom of the trench shall be replaced with select granular material or initial backfill material unless otherwise shown on the contract drawings.

3.2.1.2 Replacement of Unstable Material

Unstable material removed from the bottom of the trench or excavation shall be replaced with select granular material placed in layers not exceeding 150 mm loose thickness.

3.2.1.3 Bedding and Initial Backfill

Bedding shall be of the type and thickness shown. Initial backfill material shall be placed and compacted with approved tampers to a height of at least one foot above the utility pipe or conduit. The backfill shall be brought up evenly on both sides of the pipe for the full length of the pipe. Care shall be taken to ensure thorough compaction of the fill under the haunches of the pipe.

3.2.1.4 Final Backfill

The remainder of the trench, except for special materials for roadways shall be filled with satisfactory material. Backfill material shall be placed and compacted as follows:

a. Roadways: Backfill shall be placed up to the elevation at which the requirements in Section 02300 SITE GRADING AND EARTHWORK FOR ROADWAYS control. Water flooding or jetting methods of compaction will not be permitted.

b. Sidewalks, Turfed or Seeded Areas and Miscellaneous Areas: Backfill shall be deposited in layers of a maximum of 300 mm loose thickness, and compacted to 85 percent maximum density for cohesive soils and 90 percent maximum density for cohesionless soils. Compaction by water flooding or jetting will not be permitted. This requirement shall also apply to all other areas not specifically designated above.

3.2.2 Backfill for Appurtenances

After the manhole, catch basin, inlet, or similar structure has been constructed and the concrete has been allowed to cure for 3 days, backfill shall be placed in such a manner that the structure will not be damaged by the shock of falling earth. The backfill material shall be deposited and compacted as specified for final backfill, and shall be brought up evenly on all sides of the structure to prevent eccentric loading and excessive stress.

3.3 SPECIAL REQUIREMENTS

Special requirements for both excavation and backfill relating to the specific utilities are as follows:

3.3.1 Gas Distribution

Trenches shall be excavated to a depth that will provide not less than 600 mm of cover.. Trenches shall be graded as specified for pipe-laying requirements in Section 02685 GAS DISTRIBUTION SYSTEM.

3.3.2 Water Lines

Trenches shall be of a depth to provide a minimum cover of 1.2 meters from the existing ground surface, or from the indicated finished grade, whichever is lower, to the top of the pipe.

3.3.3 Electrical Distribution System

Direct burial cable and conduit or duct line shall have a minimum cover of 600 mm from the finished grade, unless otherwise indicated. Special trenching requirements for direct-burial electrical cables and conduits are specified in Section 16375 ELECTRICAL DISTRIBUTION SYSTEM, UNDERGROUND.

3.3.4 Plastic Marking Tape

Warning tapes shall be installed directly above the pipe, at a depth of 450 millimeters below finished grade unless otherwise shown.

3.4 TESTING

Testing shall be the responsibility of the Contractor and shall be

performed at no additional cost to the Government. Tests shall be performed by an approved commercial testing laboratory or may be tested by facilities furnished by the Contractor. Approval of testing facilities shall be based on requirements indicated in SECTION 00800, TESTING LABORATORIES, and SECTION 01451. No work requiring testing will be permitted until the facilities have been inspected and approved by the Contracting Officer. The first inspection shall be at the expense of the Government. Cost incurred for any subsequent inspection required because of failure of the first inspection will be charged to the Contractor. Tests shall be performed in sufficient numbers to insure that the specified density is being obtained. Laboratory tests for moisture-density relations shall be determined in accordance with ASTM D 1557, Procedure C. A mechanical tamper may be used, provided the results are correlated with those obtained by the referenced hand tamper. Field in-place density shall be determined in accordance with ASTM D 1556, or ASTM D 2922. ASTM D 2922 results in a wet unit weight of soil and when using this method, ASTM D 3017 shall be used to determine the moisture content of the soil. The calibration curves furnished with the moisture gages shall be checked along with the density calibration checks as described in ASTM D 3017. The calibration checks of both the density and moisture gages shall be made at the beginning of a job, on each different type of material encountered, at intervals as directed by the Contracting Officer. Copies of calibration curves and results of calibration tests shall be furnished to the Contracting Officer within 24 hours of conclusion of tests. Trenches improperly compacted shall be reopened to the depth directed, then refilled and compacted to the density specified at no additional cost to the Government. Sieve analysis shall be performed in accordance with ASTM C 117, ASTM C 136, and ASTM D 422; sieves shall conform to ASTM E 11; and liquid limit and plasticity index determinations shall be performed in accordance with ASTM D 4318. Copies of test results shall be furnished to the Contracting Officer. The following minimum testing is required:

3.4.1 Moisture-Density, Plasticity, Sieve Analysis and Moisture Content Tests

3.4.1.1 Sieve Analysis and Plasticity

One sieve analysis and one liquid limit and plasticity index determination for cohesive soils per 375 cubic meters or fraction thereof of fill and backfill and per 300 linear meters or fraction thereof of subgrade.

3.4.1.2 Optimum Moisture and Laboratory Maximum Density

One moisture-density curve to determine the optimum moisture content and the laboratory maximum density values shall be done for each type of subgrade material (Fill and Cut Areas) and one curve shall be done per 375 cubic meters of each type of fill and backfill materials, to include any borrow materials.

3.4.1.3 Moisture Contents

A minimum of one test per 150 linear meters or fraction thereof of the trench subgrade prior to placement of fill or backfill thereon during stable weather conditions. In the stockpile, excavation, or borrow areas, a minimum of two tests per day per type of material or source of material being placed during stable weather conditions. During unstable weather, tests shall be made as directed by local conditions and approved by the Contracting Officer.

3.4.1.4 Additional Tests

Additional gradation, liquid limit, plasticity index determinations and moisture-density curves shall be required if there if any changes in gradation or particle shape or when any change occurs in the material which may affect the optimum moisture content or laboratory maximum density.

3.4.2 Field Density Tests

3.4.2.1 Paved Areas

One test per lift per 15 linear meters or fraction thereof of backfill materials. One test per 15 linear meters or fraction thereof of subgrade.

3.4.2.2 Other Areas

One test per lift per 70 linear meters or fraction thereof of backfill materials. One test per 70 linear meters or fraction thereof of subgrade.

3.4.2.3 Utility and Drainage Structures which Abut Pavements

One test per 300 mm of compacted thickness or fraction thereof per structure for backfill materials. One test per structure for subgrade.

3.4.3 Check Tests on In-Place Densities

If ASTM D 2922 is used, in-place densities shall be checked by ASTM D 1556 as follows

3.4.3.1 Paved Areas

One check test per lift per 150 linear meters or fraction thereof of backfill materials. One check test per 150 linear meters or fraction thereof of subgrade.

3.4.3.2 Other Areas

One check test per lift per 650 linear meters or fraction thereof of backfill materials. One check test per 650 linear meters or fraction thereof of subgrade.

3.4.3.3 Utility and Drainage Structures which Abut Pavements

One check test per 300 mm of compacted thickness or fraction thereof per 5 structures for backfill materials. One test per 5 structures for subgrade.

3.4.4 Location of Tests

Location of Tests shall be at the direction of the Government.

3.4.5 Displacement of Sewers

After other required tests have been performed and the trench backfill compacted to 600 millimeters above the top of the pipe] [the finished grade surface, the pipe shall be inspected to determine whether significant displacement has occurred. This inspection shall be conducted in the presence of the Contracting Officer. Pipe sizes larger than 900 mm (36 inches) shall be entered and examined, while smaller diameter pipe shall be inspected by shining a light or laser between manholes or manhole

locations, or by the use of television cameras passed through the pipe. If, in the judgement of the Contracting Officer, the interior of the pipe shows poor alignment or any other defects that would cause improper functioning of the system, the defects shall be remedied as directed at no additional cost to the Government.

-- End of Section --

SECTION 02551

BITUMINOUS PAVING - MARYLAND

1.1 APPLICABLE PUBLICATION:

Standard Specifications for Construction and Materials; Maryland Department of Transportation, State Highway Administration, edition October 1993.

1.2 Definitions

Reference to "Engineer" shall be interpreted to mean "Contracting Officer."

1.3 Measurement and Payment

Delete all references to MEASUREMENT and PAYMENT paragraphs.

1.4 Testing

All testing shall be done by an independent commercial testing laboratory at the Contractor's expense and responsibility.

2.1 Bituminous Surface Course

Bituminous Surface Course shall conform to the requirements of Section 504, Hot Mix Asphalt Pavement, Maryland State Specifications, except as modified herein.

2.2 Materials

Section 904.06 - Hot Mix Asphalt. The gradation band shall be "SC."

The establishment of the mix design, determination of required asphalt content, and supplementary tests of laboratory mixed blends of hot-bin materials from actual production shall be performed by an independent recognized commercial testing laboratory at the Contractor's expense and responsibility. The finished mixture shall meet the requirements described below when tested in accordance with CRDC-C 649-95, CRD-C 650-95 and CRD-C 652-95.

Test Property	Surface Course
Stability, minimum, kN	4.4
Flow, maximum 0.3 mm units	18
Voids, total mix, percent	3-5
Voids filled with bitumen, percent	75-80

Note: The Contractor shall submit the mix design accompanied by test results attesting that the materials and proportions selected shall produce a mixture of the specified qualities.

2.3 Plant Control

Section 904.06.05 - Plant Control.

The plant control, including the establishment of the actual mixing

temperature, shall be performed by an independent recognized commercial testing laboratory at the Contractor's expense and responsibility. Hot-bin gradations shall be performed at a minimum of two-hour intervals and the composite gradation shall be calculated from the gradation of each hot bin. Based on these analyses, suitable adjustments shall be made to conform to the approved job-mix formula. A minimum of three Marshall specimens shall be molded per 270 metric tons of material placed or fraction thereof. Specimens shall be tested in accordance with CRDC-C 649-95 and the results furnished the Contracting Officer 24 hours after completion of the testing.

2.4 Construction - Sections 504.03

2.4.1 Foundation Preparation - Section 504.03.03

2.4.1.1 Granular Base Courses

Granular base courses shall conform to the requirements of SECTION 02722 AGGREGATE BASE COURSE and SECTION 02714 EXTERIOR PAVEMENT DRAINAGE LAYER (RAPID DRAINAGE MATERIAL).

2.4.1.2 Prime Coat

A prime coat shall be applied to all areas indicated on the drawings or directed by the Contracting Officer. Material shall be tar (RT-2), cutback asphalt (MC-30 or MC-70), or emulsified asphalt (CSS-1 or SS-1) conforming to Section 904. Surfaces to be primed shall be free of excess dust and other loose material. Application rates shall range from 0.7 to 1.8 liters per square meter. The actual application rate shall be determined by the Contracting Officer from the results of a trial strip. The prime coat shall be permitted to cure for a period of 48 hours or longer, as required by the Contracting Officer. The primed surface shall not be left uncovered long enough to permit it to loose its tackiness. Sand shall be used to blot up excess bituminous material when directed by the Contracting Officer.

2.4.1.3 Tack Coat

A tack coat shall be applied to all areas indicated on the drawings or directed by the Contracting Officer. Materials shall be tar (RT-6), cutback asphalt (RC-250 or RC-800), or emulsified asphalt (RS-1 or SS-1) conforming to Section 904. Surfaces to receive a tack coat shall be free of excess dust and other loose material. Application rates shall range from 0.2 to 1.1 liters per square meter. The actual application rate shall be determined by the Contracting Officer from the results of a trial strip. Work shall be planned so that no more tack coat than is necessary for the day's operation is placed on the surface. The tack coat shall be permitted to cure until the proper degree of tackiness, as determined by the Contracting Officer, has been obtained. Sand shall be used to blot up excess bituminous material when directed by the Contracting Officer.

2.5 Sampling and Testing - Section 504.03.09

Samples for determining pavement densities shall be taken with a coring machine or by cutting a 6-inch square out of the pavement. One set (three samples) shall be taken for every 270 metric tons of material placed. Density samples of the day's production should be taken and tested by noon of the following day and the results submitted to the Contracting Officer within 24 hours after completion of the testing.

3.1 Earthwork and Subgrade Preparation

Earthwork and subgrade preparation shall conform to SECTION 02300 SITE GRADING AND EARTHWORK FOR ROADWAYS.

-- End of Section --

SECTION 02580

PAVEMENT MARKINGS

PART 1 GENERAL

1.1 REFERENCES

The publications listed below form a part of this specification to the extent referenced. The publications are referred to in the text by basic designation only.

AMERICAN ASSOCIATION OF STATE HIGHWAY AND TRANSPORTATION OFFICIALS (AASHTO)

AASHTO M 248	(1991I) Ready-Mixed White and Yellow Traffic Paints

1.2 SUBMITTALS

Government approval is required for submittals with a "GA" designation; submittals having an "FIO" designation are for information only. The following shall be submitted in accordance with Section 01330 SUBMITTAL PROCEDURES:

SD-01 Data

Equipment Lists; GA|ED.

Lists of proposed equipment to be used in performance of construction work, including descriptive data, and notifications of proposed Contractor actions as specified in this section.

SD-13 Certificates

Volatile Organic Compound (VOC) Content; GA|ED.

Certificate stating that the proposed pavement marking paint meets the VOC regulations of the local Air Pollution Control District having jurisdiction over the geographical area in which the project is located.

1.3 DELIVERY AND STORAGE

All materials shall be delivered and stored in sealed containers that plainly show the designated name, formula or specification number, batch number, color, date of manufacture, manufacturer's name, and directions, all of which shall be plainly legible at time of use.

1.4 EQUIPMENT

All machines, tools and equipment used in the performance of the work shall be approved and maintained in satisfactory operating condition. Equipment operating on roads and runways will display low speed traffic markings and traffic warning lights.

1.4.1 Paint Application Equipment

The equipment to apply paint to pavements shall be a self-propelled or push type spraying machine with suitable arrangements of atomizing nozzles and controls to obtain the specified results. The machine shall be capable of applying the stripe widths indicated, at the paint coverage rate specified in paragraph APPLICATION, and of even uniform thickness with clear-cut edges. The paint applicator shall have paint reservoirs or tanks of sufficient capacity and suitable gauges to apply paint in accordance with requirements specified. Tanks shall be equipped with suitable air-driven mechanical agitators. The spray mechanism shall be equipped with quick-action valves conveniently located, and shall include necessary pressure regulators and gauges in full view and reach of the operator. Paint strainers shall be installed in paint supply lines to insure freedom from residue and foreign matter that may cause malfunction of the spray guns. The paint applicator shall be readily adaptable for attachment of an air-actuated dispenser for the reflective media approved for use. Pneumatic spray guns shall be provided for hand application of paint in areas where the mobile paint applicator cannot be used.

1.4.2 Surface Preparation Equipment

1.4.2.1 Sandblasting Equipment

Sandblasting equipment shall include an air compressor, hoses, and nozzles of proper size and capacity as required for cleaning surfaces to be painted. The compressor shall be capable of furnishing not less than 70.8 liters per sec (150 cfm) of air at a pressure of not less than 620 kPa (90 psi) at each nozzle used, and shall be equipped with traps that will maintain the compressed air free of oil and water.

1.4.2.2 Waterblast Equipment

The water pressure shall be specified at 17.9 MPa (2600 psi) at 60 degrees C (140 degrees F in order to adequately clean the surfaces to be marked.

1.4.3 Traffic Controls

Suitable warning signs shall be placed near the beginning of the worksite and well ahead of the worksite for alerting approaching traffic from both directions.

1.5 HAND-OPERATED, PUSH-TYPE MACHINES

All machines, tools, and equipment used in performance of the work shall be approved and maintained in satisfactory operating condition. Hand-operated push-type machines of a type commonly used for application of paint to pavement surfaces shall be acceptable for marking small streets and parking areas. Applicator machine shall be equipped with the necessary paint tanks and spraying nozzles, and shall be capable of applying paint uniformly at coverage specified. Sandblasting equipment shall be provided as required for cleaning surfaces to be painted. Hand-operated spray guns shall be provided for use in areas where push-type machines cannot be used.

PART 2 PRODUCTS

2.1 PAINT

The paint shall be homogeneous, easily stirred to smooth consistency, and shall show no hard settlement or other objectionable characteristics during

a storage period of 6 months. Paint for roads and streets shall conform to AASHTO M 248, color as indicated. Pavement marking paints shall comply with applicable state and local laws enacted to ensure compliance with Federal Clean Air Standards. Paint materials shall conform to the restrictions of the local Air Pollution Control District.

PART 3 EXECUTION

3.1 SURFACE PREPARATION

Surfaces to be marked shall be thoroughly cleaned before application of the pavement marking material. Dust, dirt, and other granular surface deposits shall be removed by sweeping, blowing with compressed air, rinsing with water or a combination of these methods as required. Rubber deposits, surface laitance, existing paint markings, and other coatings adhering to the pavement shall be completely removed with scrapers, wire brushes, sandblasting, approved chemicals, or mechanical abrasion as directed. Areas of old pavement affected with oil or grease shall be scrubbed with several applications of trisodium phosphate solution or other approved detergent or degreaser, and rinsed thoroughly after each application. After cleaning, oil-soaked areas shall be sealed with cut shellac to prevent bleeding through the new paint. Pavement surfaces shall be allowed to dry, when water is used for cleaning, prior to striping or marking. Surfaces shall be recleaned, when work has been stopped due to rain.

3.1.1 Pretreatment for Early Painting

Where early painting is required on rigid pavements, a pretreatment with an aqueous solution containing 3 percent phosphoric acid and 2 percent zinc chloride shall be applied to prepared pavement areas prior to painting.

3.2 APPLICATION

All pavement markings and patterns shall be placed as shown on the plans.

3.2.1 Paint

Paint shall be applied to clean, dry surfaces, and only when air and pavement temperatures are above 5 degrees C and less than 35 degrees C. Paint temperature shall be maintained within these same limits. New asphalt pavement surfaces and new portland concrete cement shall be allowed to cure for a period of not less than 30 days before applications of paint. Paint shall be applied pneumatically with approved equipment at rate of coverage specified herein. The Contractor shall provide guide lines and templates as necessary to control paint application. Special precautions shall be taken in marking numbers, letters, and symbols. Edges of markings shall be sharply outlined.

3.2.1.1 Drying

The maximum drying time requirements of the paint specifications will be strictly enforced to prevent undue softening of bitumen, and pickup, displacement, or discoloration by tires of traffic. If there is a delay in drying of the markings, painting operations shall be discontinued until cause of the slow drying is determined and corrected.

-- End of Section --

SECTION 02620

SUBDRAINAGE SYSTEM

PART 1 GENERAL

1.1 REFERENCES

The publications listed below form a part of this specification to the extent referenced. The publications are referred to in the text by basic designation only.

AMERICAN ASSOCIATION OF STATE HIGHWAY AND TRANSPORTATION OFFICIALS (AASHTO)

AASHTO M 252	(1994) Corrugated Polyethylene Drainage Tubing
AASHTO M 288-96	(1996) Geotextile Specification For Highway Applications

AMERICAN SOCIETY FOR TESTING AND MATERIALS (ASTM)

ASTM C 33	(1993) Concrete Aggregates
ASTM D 3034	(1994) Type PSM Poly(Vinyl Chloride) (PVC) Sewer Pipe and Fittings
ASTM D 3212	(1992) Joints for Drain and Sewer Plastic Pipes Using Flexible Elastomeric Seals
ASTM F 405	(1996) Corrugated Polyethylene (PE) Tubing and Fittings
ASTM F 949	(1994) Poly(Vinyl Chloride) (PVC) Corrugated Sewer Pipe With a Smooth Interior and Fittings

1.2 SUBMITTALS

Government approval is required for submittals with a "GA" designation; submittals having an "FIO" designation are for information only. The following shall be submitted in accordance with Section 01330 SUBMITTAL PROCEDURES:

SD-13 Certificates

Filtration Geotextile; GA|ED. Pipe for Subdrains; FIO;AR.

Certifications from the manufacturers attesting that materials meet specification requirements. Certificates are required for drain pipe, drain tile, fittings, and filtration geotextile.

SD-14 Samples

Filtration Geotextile; GA|ED. Pipe for Subdrains; FIO;AR.

Samples of filtration geotextile, pipe, and pipe fittings, before starting the work.

1.3 DELIVER, STORAGE, AND HANDLING

1.3.1 Delivery and Storage

Materials delivered to site shall be inspected for damage, unloaded, and stored with minimum handling. Materials shall not be stored directly on the ground. The inside of pipes and fittings shall be kept free of dirt and debris. During shipment and storage, filtration geotextile shall be wrapped in burlap or similar heavy duty protective covering. The storage area shall protect the geotextile from mud, soil, dust, and debris. Filtration Geotextile materials that are not to be installed immediately shall not be stored in direct sunlight. Plastic pipe shall be installed within 6 months from the date of manufacture unless otherwise approved.

1.3.2 Handling

Materials shall be handled in such a manner as to insure delivery to the trench in sound undamaged condition. Pipe shall be carried and not dragged to the trench.

PART 2 PRODUCTS

2.1 PIPE FOR SUBDRAINS

Pipe for subdrains shall be of the types and sizes indicated.

2.1.1 Plastic Pipe

Plastic pipe shall contain ultraviolet inhibitor to provide protection from exposure to direct sunlight.

2.1.1.1 Polyvinyl Chloride (PVC) Pipe and Fittings

Polyvinyl chloride (PVC) pipe and fittings shall conform to ASTM D 3034.

2.1.1.2 Corrugated Polyethylene (PE) Pipe and Fittings

Use ASTM F 405 for pipes 80 to 150 mm (3 to 6 inches) in diameter, and\or AASHTO M 252 for pipes 80 to 250 mm (3 to 10 inches), in diameter. Fittings shall be manufacturer's standard type and shall conform to the indicated specification.

2.1.1.3 Pipe Perforations

Water inlet area shall be a minimum of 1,058.4 mm squared per linear meter (0.5 square inch per linear foot). Manufacturer's standard perforated pipe which essentially meets these requirements may be substituted with prior approval of the Contracting Officer.

a. Circular Perforations in Plastic Pipe: Circular holes shall be cleanly cut not more than 9.5 mm (3/8 inch) or less than 4.8 mm (3/16 inch) in diameter and arranged in rows parallel to the

longitudinal axis of the pipe. Perforations shall be approximately 76.2 mm (3 inches) center-to-center along rows. The rows shall be approximately 38.1 mm (1-1/2 inches) apart and arranged in a staggered pattern so that all perforations lie at the midpoint between perforations in adjacent rows. The rows shall be spaced over not more than 155 degrees of circumference. The spigot or tongue end of the pipe shall not be perforated for a length equal to the depth of the socket, and perforations shall continue at uniform spacing over the entire length of the pipe.

b. Slotted Perforations in Plastic Pipe: Circumferential slots shall be cleanly cut so as not to restrict the inflow of water and uniformly spaced along the length and circumference of the tubing. Width of slots shall not exceed 3.2 mm (1/8 inch) nor be less than 0.8 mm (1/32 inch). The length of individual slots shall not exceed 31.75 mm (1-1/4 inch) on 80 mm (3 inch) diameter tubing, 10 percent of the tubing inside nominal circumference on 100 to 200 mm (4 to 8 inch) diameter tubing, and 63.5 mm (2-1/2 inch) on 250 mm (10 inch) diameter tubing. Rows of slots shall be symmetrically spaced so that they are fully contained in 2 quadrants of the pipe. Slots shall be centered in the valleys of the corrugations of profile wall pipe.

2.2 Filtration Geotextile

The filtration geotextile shall be a needle punched nonwoven fabric or woven fabric except that slit film yarns shall not be used. The geotextile shall have MARV (minimum average roll value) strength properties meeting the Class 2 Geotextile Survivability requirements in accordance with AASHTO M 288-96.

The geotextile shall have MARV hydraulic properties meeting the requirements of AASHTO M 288-96 geotextile criteria for subsurface drainage (filtration) (i.e. a minimum permittivity of 0.2 sec -1 and an apparent opening size (AOS) equal or less than 0.25 mm (No. 70 sieve)).

2.3 DRAINAGE STRUCTURES

Drainage structures shall be constructed in accordance with the applicable portions of Section 02720 - STORM DRAINAGE SYSTEM.

2.4 SUBDRAIN FILTER AND BEDDING MATERIAL

Subdrain filter and bedding material shall be washed sand, sand and gravel, crushed stone, crushed stone screenings, or slag composed of hard, tough, durable particles free from adherent coatings. Filter material shall not contain corrosive agents, organic matter, or soft, friable, thin, or elongated particles and shall be evenly graded between the limits specified. Gradation curves will exhibit no abrupt changes in slope denoting skip or gap grading. Filter materials shall be clean and free from soil and foreign materials. Filter blankets found to be dirty or otherwise contaminated shall be removed and replaced with material meeting the specific requirements, at no additional cost to the Government. Filter material shall conform to the requirements of ASTM C 33, #57 Aggregate.

PART 3 EXECUTION

3.1 EXCAVATION AND BEDDING FOR SUBDRAIN SYSTEMS

Trenching and excavation, including the removal of unstable material, shall be in accordance with Section 02316 EXCAVATION, TRENCHING, AND BACKFILLING FOR UTILITIES SYSTEMS. Bedding material shall be placed in the trench as indicated or as required as replacement materials used in those areas where unstable materials were removed. Compaction of the bedding material shall be as specified for cohesionless material in Section 022316 EXCAVATION, TRENCHING, AND BACKFILLING FOR UTILITIES SYSTEMS.

3.2 INSTALLATION OF Filtration Geotextile AND PIPE FOR SUBDRAINS

3.2.1 Installation of Filtration Geotextile

3.2.1.1 Overlaps on Perforated or Slotted Pipes

One layer of filtration geotextile shall be wrapped around perforated or slotted collector pipes in such a manner that longitudinal overlaps of geotextile are in unperforated or unslotted quadrants of the pipes. The overlap shall be at least 50 mm. The geotextile shall be secured to the pipe in such a manner that backfill material will not infiltrate through any geotextile overlaps.

3.2.1.2 Trench Lining and Overlaps

Trenches to be lined with filtration geotextile shall be graded to obtain smooth side and bottom surfaces so that the geotextile will not bridge cavities in the soil or be damaged by projecting rock. The geotextile shall be laid flat but not stretched on the soil, and it shall be secured with anchor pins. Overlaps shall be at least 300 mm, and anchor pins shall be used along the overlaps. Filtration geotextile shall completely envelope the filter material as shown on the drawings.

3.2.2 Installation of Pipe for Subdrains

3.2.2.1 Pipelaying

Each pipe shall be carefully inspected before it is laid. Any defective or damaged pipe shall be rejected. No pipe shall be laid when the trench conditions or weather is unsuitable for such work. Water shall be removed from trenches by sump pumping or other approved methods. The pipe shall be laid to the grades and alignment as indicated. The pipe shall be bedded to the established gradeline. Perforations shall be centered on the bottom of the pipe. Pipes of either the bell-and-spigot type or the tongue-and-groove type shall be laid with the bell or groove ends upstream. All pipes in place shall be approved before backfilling.

a. Polyvinyl Chloride (PVC) Pipe: Joints shall be in accordance with the requirements of ASTM D 3034, ASTM D 3212, or ASTM F 949.

b. Perforated Corrugated Polyethylene Pipe: Perforated corrugated polyethylene drainage pipe shall be installed in accordance with the manufacturer's specifications and as specified herein. A pipe with physical imperfections shall not be installed. No more than 5 percent stretch in a section will be permitted.

3.3 INSTALLATION OF FILTER MATERIAL AND BACKFILLING FOR SUBDRAINS

After pipe for subdrains has been laid, inspected, and approved, filter material shall be placed around and over the pipe to the depth indicated.

The filter material shall be placed in layers not to exceed 200 mm thick, and each layer shall be moistened as necessary but not flooded and shall be thoroughly compacted by mechanical tampers or rammers to obtain the required density. Compaction of filter material and the placement and compaction of overlying backfill material shall be in accordance with the applicable provisions specified in Section 022316 EXCAVATION, TRENCHING, AND BACKFILLING FOR UTILITIES SYSTEMS.

3.4 TESTS

3.4.1 Pipe Test

Strength tests of pipe shall conform to field service test requirements of the Federal Specification, ASTM specification, or AASHTO specification covering the product (paragraph PIPE FOR SUBDRAINS).

-- End of Section --

SECTION 02660

WATER DISTRIBUTION SYSTEM

PART 1 GENERAL

1.1 REFERENCES

The publications listed below form a part of this specification to the extent referenced. The publications are referred to in the text by basic designation only.

AMERICAN SOCIETY FOR TESTING AND MATERIALS (ASTM)

ASTM D 1599	(1988) Short-Time Hydraulic Failure Pressure of Plastic Pipe, Tubing, and Fittings
ASTM D 1784	(1992) Rigid Poly(Vinyl Chloride) (PVC) Compounds and Chlorinated Poly(Vinyl Chloride) (CPVC) Compounds
ASTM D 2996	(1995) Filament-Wound "Fiberglass" (Glass-Fiber-Reinforced Thermosetting-Resin) Pipe
ASTM D 2997	(1995) Centrifugally Cast "Fiberglass" (Glass-Fiber-Reinforced-Thermosetting-Resin) Pipe
ASTM D 3839	(1994a) Underground Installation of "Fiberglass" (Glass-Fiber-Reinforced Thermosetting Resin) Pipe

AMERICAN WATER WORKS ASSOCIATION (AWWA)

AWWA B300	(1992) Hypochlorites
AWWA B301	(1992) Liquid Chlorine
AWWA C104	(1990) Cement-Mortar Lining for Ductile-Iron Pipe and Fittings for Water
AWWA C110	(1993) Ductile-Iron and Gray-Iron Fittings, 3 In. Through 48 In. (75 mm through 1200 mm), for Water and Other Liquids
AWWA C111	(1990) Rubber-Gasket Joints for Ductile-Iron Pressure Pipe and Fittings
AWWA C151	(1991) Ductile-Iron Pipe, Centrifugally Cast, for Water or Other Liquids
AWWA C153	(1994) Ductile-Iron Compact Fittings, 3 In. Through 16 In., for Water and Other

	Liquids
AWWA C500	(1993) Gate Valves for Water and Sewerage Systems
AWWA C502	(1985) Dry-Barrel Fire Hydrants
AWWA C504	(1994) Rubber-Seated Butterfly Valves
AWWA C509	(1994) Resilient-Seated Gate Valves for Water and Sewerage Systems
AWWA C600	(1993) Installation of Ductile-Iron Water Mains and Their Appurtenances
AWWA C606	(1987) Grooved and Shouldered Joints
AWWA C900	(1989; C900a) Polyvinyl Chloride (PVC) Pressure Pipe, 4 In. Through 12 In., for Water Distribution
AWWA C950	(1988) Fiberglass Pressure Pipe
AWWA M23	(1980) Manual: PVC Pipe - Design and Installation

ASBESTOS CEMENT PIPE PRODUCERS ASSOCIATION (ACPPA)

ACPPA-01	(1988) Recommended Work Practices for A/C Pipe

DUCTILE IRON PIPE RESEARCH ASSOCIATION (DIPRA)

DIPRA-01	(1992; Errata May 1993) Thrust Restraint Design for Ductile Iron Pipe

NATIONAL FIRE PROTECTION ASSOCIATION (NFPA)

NFPA 24	(1992) Installation of Private Fire Service Mains and Their Appurtenances
NFPA 49	(1991) Hazardous Chemicals Data
NFPA 325M	(1991) Fire Hazard Properties of Flammable Liquids, Gases, and Volatile Solids
NFPA 704	(1990) Identification of the Fire Hazards of Materials

NSF INTERNATIONAL (NSF)

NSF Std 14	(1965; Rev Nov 1990) Plastics Piping System Components and Related Materials

STEEL STRUCTURES PAINTING COUNCIL (SSPC)

SSPC Paint 21	(1991) White or Colored Silicone Alkyd Paint

SSPC Paint 25	(1991) Red Iron Oxide, Zinc Oxide, Raw Linseed Oil and Alkyd Primer (without Lead and Chromate Pigments)

1.2 PIPING

This section covers water service lines, and connections to building service at a point approximately 1.5 m outside buildings and structures to which service is required. The Contractor shall have a copy of the manufacturer's recommendations for each material or procedure to be utilized available at the construction site at all times.

1.2.1 Service Lines

Piping for water service lines for sizes 80 mm (3 inches) and larger shall be ductile iron, polyvinyl chloride (PVC) plastic through 300 mm (12 inch) nominal diameter, filament-wound or centrifugally cast reinforced thermosetting resin, reinforced plastic mortar pressure pipe, unless otherwise shown or specified.

1.2.2 Plastic Pipe

All plastic piping system components (PVC, thermosetting resin and reinforced plastic mortar pressure) intended for transportation of potable water shall comply with NSF Std 14 and shall be legibly marked with their symbol.

1.2.3 Excavation, Trenching, and Backfilling

Excavation, trenching, and backfilling shall be in accordance with the applicable provisions of Section 02316 EXCAVATION, TRENCHING, AND BACKFILLING FOR UTILITIES SYSTEMS, except as modified herein.

1.3 MANUFACTURER'S REPRESENTATIVE

The Contractor shall negotiate to have a manufacturer's field representative present at the jobsite during the installation and testing of RTRP and/or RPMP pipe to provide technical assistance and to verify that the materials are being installed in accordance with the manufacturer's prescribed procedures. When the representative feels that the Contractor is installing and testing the RTRP and/or RPMP pipe in a satisfactory manner, certification shall be written to note which individuals employed by the Contractor are capable of properly installing the pipe. The field representative shall advise the Contractor of unsatisfactory conditions immediately when they occur. Such conditions include improper diameter of pipe ends, damaged interior liner, poorly prepared joints, improper curing of joints, moving pipe before joints are cured, bending pipe to follow abrupt changes in trench contours, leaving pipe ends open in trench overnight, not properly drying joints after rain storms, exceeding effective adhesive life, sharp objects in trench bed, backfill that could damage pipe, improper procedure for concrete encasement of pipe, omission of thrust blocks at changes in direction or any other conditions which could have an adverse effect on the satisfactory completion and operation of the piping system.

1.4 SUBMITTALS

Government approval is required for submittals with a "GA" designation; submittals having an "FIO" designation are for information only. The

following shall be submitted in accordance with Section 01330 SUBMITTAL PROCEDURES:

SD-06 Instructions

Installation; FIO;AR.

The manufacturer's recommendations for each material or procedure to be utilized.

SD-08 Statements

Waste Water Disposal Method; GA|ED.

The method proposed for disposal of waste water from hydrostatic tests and disinfection, prior to performing hydrostatic tests.

Satisfactory Installation; FIO;AR.

A statement signed by the principal officer of the contracting firm stating that the installation is satisfactory and in accordance with the contract drawings and specifications and the manufacturer's prescribed procedures and techniques, upon completion of the project and before final acceptance.

SD-09 Reports

Bacteriological Disinfection; FIO;AR.

Test results from commercial laboratory verifying disinfection.

SD-13 Certificates

Manufacturer's Representative; FIO;AR.

The name and qualifications of the manufacturer's representative and written certification from the manufacturer that the representative is technically qualified in all phases of RTRP, and/or RPMP pipe laying and jointing and experienced to supervise the work and train the Contractor's field installers, prior to commencing installation.

1.5 HANDLING

Pipe and accessories shall be handled so as to ensure delivery to the trench in sound, undamaged condition. Particular care shall be taken not to injure the pipe coating or lining. If the coating or lining of any pipe or fitting is damaged, the repair shall be made by the Contractor at his expense in a satisfactory manner. No other pipe or material of any kind shall be placed inside a pipe or fitting after the coating has been applied. Pipe shall be carried into position and not dragged. Use of pinch bars and tongs for aligning or turning pipe will be permitted only on the bare ends of the pipe. The interior of pipe and accessories shall be thoroughly cleaned of foreign matter before being lowered into the trench and shall be kept clean during laying operations by plugging or other approved method. Before installation, the pipe shall be inspected for defects. Material found to be defective before or after laying shall be replaced with sound material without additional expense to the Government. Rubber gaskets that are not to be installed immediately shall be stored in a cool and dark place.

1.5.1 Miscellaneous Plastic Pipe and Fittings

Polyvinyl Chloride (PVC), Reinforced Thermosetting Resin Pipe (RTRP), and Reinforced Plastic Mortar Pressure (RPMP) pipe and fittings shall be handled and stored in accordance with the manufacturer's recommendations. Storage facilities shall be classified and marked in accordance with NFPA 704, with classification as indicated in NFPA 49 and NFPA 325M.

PART 2 PRODUCTS

2.1 PIPE

Pipe shall conform to the respective specifications and other requirements specified below.

2.1.1 Plastic Pipe

2.1.1.1 Polyvinyl Chloride (PVC) Plastic Pipe

Pipe, couplings and fittings shall be manufactured of material conforming to ASTM D 1784, Class 12454B.

a. Pipe 100 mm (4 inch) through 300 mm (12 Inch) Diameter: Pipe, couplings and fittings shall conform to AWWA C900, Class 150, CIOD pipe dimensions, elastomeric-gasket joint, unless otherwise shown or specified.

2.1.2 Reinforced Plastic Mortar Pressure (RPMP) Pipe

AWWA C950.

2.1.3 Reinforced Thermosetting Resin Pipe (RTRP)

Pipe shall have a quick-burst strength greater than or equal to four times the normal working pressure of the pipe. The quick-burst strength test shall conform to the requirements of ASTM D 1599.

2.1.3.1 RTRP-I

RTRP-I shall conform to ASTM D 2996, except pipe shall have an outside diameter equal to cast iron outside diameter or standard weight steel pipe. The pipe shall be suitable for a normal working pressure of 1.03 MPa (150 psi) at 23 degrees C. The inner surface of the pipe shall have a smooth uniform continuous resin-rich surface liner conforming to ASTM D 2996.

2.1.3.2 RTRP-II

RTRP-II shall conform to ASTM D 2997. Pipe shall have an outside diameter equal to standard weight steel pipe.

2.1.4 Ductile-Iron Pipe

Ductile-iron pipe shall conform to AWWA C151, working pressure not less than 1.03 MPa (150 psi), unless otherwise shown or specified. Pipe shall be cement-mortar lined in accordance with AWWA C104. Linings shall be standard.

2.2 FITTINGS AND SPECIALS

2.2.1 Polyvinyl Chloride (PVC) Pipe

a. For pipe 100 mm (4 inch) diameter and larger, fittings and specials shall be iron, bell end in accordance with AWWA C110, 1.03 MPa (150 psi) pressure rating unless otherwise shown or specified, except that profile of bell may have special dimensions as required by the pipe manufacturer; or may be fittings and specials of the same material as the pipe with elastomeric gaskets, all in conformance with AWWA C900. Iron fittings and specials shall be cement-mortar lined (standard thickness) in accordance with AWWA C104. Fittings shall be bell and spigot or plain end pipe, or as applicable. Ductile iron compact fittings shall be in accordance with AWWA C153.

2.2.2 RTRP and RPMP Pipe

Fittings and specials shall be compatible with the pipe supplied. Filament wound or molded fittings up to 150 mm (6 inches) shall conform to AWWA C950. Iron fittings shall be cement-mortar lined in accordance with AWWA C104 and shall conform to AWWA C110 and AWWA C111. Fittings shall be suitable for working and testing pressures specified for the pipe.

2.2.3 Ductile-Iron Pipe

Fittings and special shall be suitable for 1.03 MPa (150 psi) pressure rating, unless otherwise specified. Fittings and specials for mechanical joint pipe shall conform to AWWA C110. Fittings and specials for use with push-on joint pipe shall conform to AWWA C110 and AWWA C111. Fittings and specials for grooved and shouldered end pipe shall conform to AWWA C606. Fittings and specials shall be cement-mortar lined (standard thickness) in accordance with AWWA C104. Ductile iron compact fittings shall conform to AWWA C153.

2.3 JOINTS

2.3.1 Plastic Pipe

2.3.1.1 Polyvinyl Chloride Pipe

Joints, fittings, and couplings shall be as specified for PVC pipe. Joints connecting pipe of differing materials shall be made in accordance with the manufacturer's recommendations as approved by the Contracting Officer.

2.3.2 RPMP Pipe

Joints shall be mechanical or bell and spigot type with elastomeric gasket.

2.3.3 RTRP

2.3.3.1 RTRP-I, Grade I and 2

Joints shall be bell and spigot with elastomeric gasket, mechanical coupling with elastomeric gasket, threaded and bonded coupling, or tapered bell and spigot with compatible adhesive. All RTRP-I materials shall be products of a single manufacturer.

2.3.3.2 RTRP-II, Grade 1 and 2

Joints shall be the bell and spigot type with elastomeric gasket, bell and

spigot with adhesive, butt-jointed with adhesive bonded reinforced overlay, mechanical, flanged, threaded or commercially available proprietary joints, provided they are capable of conveying water at the pressure and temperature of the pipe.

2.3.4 Ductile-Iron Pipe

a. Mechanical joints shall be of the stuffing box type and shall conform to AWWA C111.

b. Push-on joints shall conform to AWWA C111.

c. Rubber gaskets and lubricant shall conform to the applicable requirements of AWWA C111.

2.4 VALVES

2.4.1 Gate Valves

Gate valves shall be designed for a working pressure of not less than 1.03 MPa (150 psi). Valve connections shall be as required for the piping in which they are installed. Valves shall have a clear waterway equal to the full nominal diameter of the valve, and shall be opened by turning counterclockwise. The operating nut or wheel shall have an arrow, cast in the metal, indicating the direction of opening.

a. Valves 80 mm (3 inches) and larger shall be iron body, bronze mounted, and shall conform to AWWA C500. Flanges shall not be buried. An approved pit shall be provided for all flanged connections.

b. Resilient-Seated Gate Valves: For valves 80 to 300 mm (3 to 12 inches) in size, resilient-seated gate valves shall conform to AWWA C509.

2.4.2 Rubber-Seated Butterfly Valves

Rubber-seated butterfly valves shall conform to the performance requirements of AWWA C504. Wafer type valves conforming to the performance requirements of AWWA C504 in all respects, but not meeting laying length requirements will be acceptable if supplied and installed with a spacer providing the specified laying length. All tests required by AWWA C504 shall be met. Flanged-end valves shall be installed in an approved pit and provided with a union or sleeve-type coupling in the pit to permit removal. Mechanical-end valves 80 mm (3 inches) through 250 mm (10 inches) in diameter may be direct burial if provided with a suitable valve box, means for manual operation, and an adjacent pipe joint to facilitate valve removal. Valve operators shall restrict closing to a rate requiring approximately 60 seconds, from fully open to fully closed.

2.4.3 Indicator Post for Valves

Each valve shown on the drawings with the designation "P.I.V." shall be equipped with indicator post conforming to the requirements of NFPA 24. Operation shall be by a wrench which will be attached to each post.

2.5 VALVE BOXES

Valve boxes shall be cast iron. Cast-iron boxes shall be extension type

with slide-type adjustment and with flared base. The minimum thickness of metal shall be 5 mm. The word "WATER" shall be cast in the cover. The box length shall adapt, without full extension, to the depth of cover required over the pipe at the valve location.

2.6 FIRE HYDRANTS

Hydrants shall be dry-barrel type conforming to AWWA C502 with valve opening at least 125 mm (5 inches) in diameter and designed so that the flange at the main valve seat can be removed with the main valve seat apparatus remaining intact, closed and reasonably tight against leakage and with a breakable valve rod coupling and breakable flange connections located no more than 200 mm above the ground grade. Hydrants shall have a 150 mm (6 inch) bell connection, two 65 mm (2-1/2 inch) hose connections and one 115 mm (4-1/2 inch) pumper connection. Outlets shall have American National Standard fire-hose coupling threads. Working parts shall be bronze. Design, material, and workmanship shall be similar and equal to the latest stock pattern ordinarily produced by the manufacturer. Hydrants shall be painted with one coat of red iron oxide, zinc oxide primer conforming to SSPC Paint 25 and two finish coats of silicone alkyd paint conforming to SSPC Paint 21, of the installation's standard colors or as directed by the Contracting Officer. Suitable bronze adapter for the 115 mm (4-1/2 inch) outlet, with caps, shall be furnished.

2.7 MISCELLANEOUS ITEMS

2.7.1 Service Clamps

Service clamps shall have a pressure rating not less than that of the pipe to be connected and shall be either the single or double flattened strap type. Clamps shall have a galvanized malleable-iron body with cadmium plated straps and nuts. Clamps shall have a rubber gasket cemented to the body.

2.7.2 Disinfection

Chlorinating materials shall conform to the following:

Chlorine, Liquid: AWWA B301.

Hypochlorite, Calcium and Sodium: AWWA B300.

PART 3 EXECUTION

3.1 INSTALLATION

3.1.1 Cutting of Pipe

Cutting of pipe shall be done in a neat and workmanlike manner without damage to the pipe. Unless otherwise recommended by the manufacturer and authorized by the Contracting Officer, cutting shall be done with an approved type mechanical cutter. Wheel cutter shall be used when practicable. Copper tubing shall be cut square and all burrs shall be removed. Squeeze type mechanical cutters shall not be used for ductile iron.

3.1.2 Adjacent Facilities

3.1.2.1 Sewer Lines

Where the location of the water pipe is not clearly defined in dimensions on the drawings, the water pipe shall not be laid closer horizontally than 3 m from a sewer except where the bottom of the water pipe will be at least 300 mm above the top of the sewer pipe, in which case the water pipe shall not be laid closer horizontally than 1.8 m from the sewer. Where water lines cross under gravity-flow sewer lines, the sewer pipe for a distance of at least 3 m each side of the crossing shall be fully encased in concrete or shall be made of pressure pipe with no joint located within 900 mm horizontally of the crossing. Water lines shall in all cases cross above sewage force mains or inverted siphons and shall be not less than 600 mm above the sewer main. Joints in the sewer main, closer horizontally than 900 mm to the crossing, shall be encased in concrete.

3.1.2.2 Water Lines

Water lines shall not be laid in the same trench with sewer lines, gas lines, fuel lines, or electric wiring.

3.1.2.3 Nonferrous Metallic Pipe

Where nonferrous metallic pipe, e.g. copper tubing, crosses any ferrous piping material, a minimum vertical separation of 300 mm shall be maintained between pipes.

3.1.3 Joint Deflection

3.1.3.1 Flexible Plastic Pipe

Maximum offset in alignment between adjacent pipe joints shall be as recommended by the manufacturer and approved by the Contracting Officer, but in no case shall it exceed 5 degrees.

3.1.3.2 Ductile-Iron Pipe

The maximum allowable deflection shall be as given in AWWA C600. If the alignment requires deflection in excess of the above limitations, special bends or a sufficient number of shorter lengths of pipe shall be furnished to provide angular deflections within the limit set forth.

3.1.4 Placing and Laying

Pipe and accessories shall be carefully lowered into the trench by means of derrick, ropes, belt slings, or other authorized equipment. Under no circumstances shall any of the water-line materials be dropped or dumped into the trench. Care shall be taken to avoid abrasion of the pipe coating. Except where necessary in making connections with other lines or as authorized by the Contracting Officer, pipe shall be laid with the bells facing in the direction of laying. The full length of each section of pipe shall rest solidly upon the pipe bed, with recesses excavated to accommodate bells, couplings, and joints. Pipe that has the grade or joint disturbed after laying shall be taken up and relaid. Pipe shall not be laid in water or when trench conditions are unsuitable for the work. Water shall be kept out of the trench until joints are complete. When work is not in progress, open ends of pipe, fittings, and valves shall be securely closed so that no trench water, earth, or other substance will enter the pipes or fittings. Where any part of the coating or lining is damaged, the repair shall be made by the Contractor at his expense in a satisfactory manner. Pipe ends left for future connections shall be valved, plugged, or

capped, and anchored, as shown.

3.1.4.1 Plastic Pipe Installation

RTRP shall be installed in accordance with ASTM D 3839. RPMP shall be installed in accordance with the recommendations of the manufacturer. PVC pipe shall be installed in accordance with AWWA M23.

3.1.4.2 Connections

Where connections are made between new work and existing mains, the connections shall be made by using specials and fittings to suit the actual conditions. When made under pressure, these connections shall be installed using standard methods as approved by the Contracting Officer. Connections to existing asbestos-cement pipe shall be made in accordance with ACPPA-01.

3.1.4.3 Penetrations

Pipe passing through walls of valve pits and structures shall be provided with ductile-iron or Schedule 40 steel wall sleeves. Annular space between walls and sleeves shall be filled with rich cement mortar. Annular space between pipe and sleeves shall be filled with mastic.

3.1.5 Jointing

3.1.5.1 Polyvinyl Chloride (PVC) Plastic Pipe

a. Pipe 100 mm (4 inch) through 300 mm (12 inch) diameter: Joints shall be elastomeric-gasket as specified in AWWA C900. Jointing procedure shall be as specified for pipe less than 100 mm (4 inch) diameter with configuration using elastomeric ring gasket.

3.1.5.2 RTRP I, RTRP II and RPMP Pipe

a. RTRP I: Assembly of the pipe shall be done in strict conformance with the manufacturer's written instruction and installation procedures. Field joints shall be prepared as specified by the pipe manufacturer. Several pipe joints having interference-fit type couplings may be field bonded and cured simultaneously. However, the pipe shall not be moved nor shall additional joints be made until the previously laid joints are completely cured. Joints not having interference-fit type coupling shall be fitted with a clamp which shall hold the joint rigidly in place until the joint cement has completely cured. The clamps shall have a protective material on the inner surface to prevent damage to the plastic pipe when the clamp is tightened in place. The pipe manufacturer shall provide a device or method to determine when the joint is pulled against the pipe stop. Additionally, the pipe manufacturer shall furnish a gauge to measure the diameter of the spigot ends to ensure the diameter conforms to the tolerances specified by the manufacturer. All pipe ends shall be gauged. Factory certified tests shall have been satisfactorily performed to verify that short-term rupture strength is 10.3 MPa (1,500 psi) or greater when carried out in accordance with ASTM D 1599. All field bonded epoxy-cemented joints, regardless of ambient temperature, shall be cured with a self-regulating thermostatically temperature controlled electrical heating blanket for the time and temperature recommended by the manufacturer for the applicable size and type of joint, or by an alternate heating

method recommended by the manufacturer and approved by the Contracting Officer. The joint sections shall not be moved during heating or until the joint has cooled to ambient temperature.

b. RTRP II: A reinforced overlay joint shall be used to join sections together through a placement of layers of reinforcement fiberglass roving, mat, tape or fabric thoroughly saturated with compatible catalyzed resin.

c. Fittings and Specials for RTRP and RPMP Pipe: Metal to RTRP and RPMP pipe connections shall be made by bolting steel flanges to RTRP and RPMP pipe flanges. Cast-iron fitting with gasket bell or mechanical joint may be used with RTRP if pipe has cast iron outside diameter. Steel flanges shall be flat-faced type. Where raised-face steel flanges are used, spacer rings shall be used to provide a flat-face seat for RTRP and RPMP pipe flanges. A full-face Buna "N" gasket 3.2 mm (1/8 inch) thick with a shore hardness of 50-60 shall be used between all flanged connections. The RTRP and RPMP pipe flange shall have raised sealing rings. Flat washers shall be used under all nuts and bolts on RTRP and RPMP pipe flanges. Bolts and nuts shall be of noncorrosive steel and torqued to not more than 135 Newton meters. Flanges shall not be buried. A concrete pit shall be provided for all flanged connections.

3.1.5.3 Ductile-Iron Pipe

Mechanical and push-on type joints shall be installed in accordance with AWWA C600 for buried lines.

3.1.5.4 Connections

Connections between different types of pipe and accessories shall be made with transition fittings approved by the Contracting Officer.

3.1.6 Service Lines

Service lines shall include the pipeline connecting building piping to water distribution lines to the connections with the building service at a point approximately 1.5 m outside the building where such building service exists. Where building services are not installed, the Contractor shall terminate the service lines approximately 1.5 m from the site of the proposed building at a point designated by the Contracting Officer. Such service lines shall be closed with plugs or caps. All valves shall be provided with service boxes. Service lines shall be constructed in accordance with the following requirements:

3.1.6.1 Service Lines Larger than 50 mm (2 Inches)

Service lines larger than 50 mm (2 inches) shall be connected to the main by a tapped saddle, tapping sleeve and valve, service clamp or reducing tee, depending on the main diameter and the service line diameter, and shall have a gate valve. Lines 80 mm (3 inches) and larger may use rubber-seated butterfly valves as specified above, or gate valves.

3.1.6.2 Service Lines for Sprinkler Supplies

Water service lines used to supply building sprinkler systems for fire protection shall be connected to the water distribution main in accordance

with NFPA 24.

3.1.7 Setting of Fire Hydrants, Meters, Valves and Valve Boxes

3.1.7.1 Fire Hydrants

Fire hydrants shall be located and installed as shown. Each hydrant shall be connected to the main with a 150 mm (6 inch) branch line having at least as much cover as the distribution main. Hydrants shall be set plumb with pumper nozzle facing the roadway, with the center of the lowest outlet not less than 450 mm above the finished surrounding grade, and the operating nut not more than 1.2 m above the finished surrounding grade. Fire hydrants designated on the drawings as low profile shall have the lowest outlet not less than 450 mm above the finished surrounding grade, the top of the hydrant not more than 600 mm above the finished surrounding grade. Except where approved otherwise, the backfill around hydrants shall be thoroughly compacted to the finished gradeline immediately after installation to obtain beneficial use of the hydrant as soon as practicable. The hydrant shall be set upon a slab of concrete not less than 100 mm thick and 400 mm square. Not less than 2 cubic meters of free-draining gravel shall be placed around and beneath the waste opening of dry barrel hydrants to ensure drainage.

3.1.7.2 Valves

After delivery, valves, including those in hydrants, shall be drained to prevent freezing and shall have the interiors cleaned of all foreign matter before installation. Stuffing boxes shall be tightened and hydrants and valves shall be fully opened and fully closed to ensure that all parts are in working condition. Valves and valve boxes shall be installed where shown or specified, and shall be set plumb. Valve boxes shall be centered on the valves. Boxes shall be installed over each outside gate valve unless otherwise shown. Where feasible, valves shall be located outside the area of roads and streets. Earth fill shall be carefully tamped around each valve box or pit to a distance of 1.2 m on all sides of the box, or the undisturbed trench face if less than 1.2 m.

3.1.8 Thrust Restraint

Plugs, caps, tees and bends deflecting 11-1/4 degrees or more, either vertically or horizontally, on waterlines 100 mm (4 inches) in diameter or larger, and fire hydrants shall be provided with thrust restraints. Valves shall be securely anchored or shall be provided with thrust restraints to prevent movement. Thrust restraints shall be either thrust blocks or, for ductile-iron pipes, restrained joints.

3.1.8.1 Thrust Blocks

Thrust blocking shall be concrete of a mix not leaner than: 1 cement, 2-1/2 sand, 5 gravel; and having a compressive strength of not less than 14 MPa after 28 days. Blocking shall be placed between solid ground and the hydrant or fitting to be anchored. Unless otherwise indicated or directed, the base and thrust bearing sides of thrust blocks shall be poured directly against undisturbed earth. The sides of thrust blocks not subject to thrust may be poured against forms. The area of bearing shall be as shown or as directed. Blocking shall be placed so that the fitting joints will be accessible for repair. Steel rods and clamps, protected by galvanizing or by coating with bituminous paint, shall be used to anchor vertical down bends into gravity thrust blocks.

3.1.8.2 Restrained Joints

For ductile-iron pipe, restrained joints shall be designed by the Contractor or the pipe manufacturer in accordance with DIPRA-01.

3.2 HYDROSTATIC TESTS

Where any section of a water line is provided with concrete thrust blocking for fitting or hydrants, the hydrostatic tests shall not be made until at least 5 days after installation of the concrete thrust blocking, unless otherwise approved.

3.2.1 Pressure Test

After the pipe is laid, the joints completed, fire hydrants permanently installed, and the trench partially backfilled leaving the joints exposed for examination, the newly laid piping or any valved section of piping shall, unless otherwise specified, be subjected for 1 hour to a hydrostatic pressure test of 1.38 MPa (200 psi). Water supply lines designated on the drawings shall be subjected for 1 hour to a hydrostatic pressure test of 1.38 MPa (200 psi). Each valve shall be opened and closed several times during the test. Exposed pipe, joints, fittings, hydrants, and valves shall be carefully examined during the partially open trench test. Joints showing visible leakage shall be replaced or remade as necessary. Cracked or defective pipe, joints, fittings, hydrants and valves, discovered in consequence of this pressure test shall be removed and replaced with sound material, and the test shall be repeated until the test results are satisfactory. The requirement for the joints to remain exposed for the hydrostatic tests may be waived by the Contracting Officer when one or more of the following conditions is encountered:

a. Wet or unstable soil conditions in the trench.

b. Compliance would require maintaining barricades and walkways around and across an open trench in a heavily used area that would require continuous surveillance to assure safe conditions.

c. Maintaining the trench in an open condition would delay completion of the contract.

The Contractor may request a waiver, setting forth in writing the reasons for the request and stating the alternative procedure proposed to comply with the required hydrostatic tests. Backfill placed prior to the tests shall be placed in accordance with the requirements of Section 02316 EXCAVATION, TRENCHING, AND BACKFILLING FOR UTILITIES SYSTEMS.

3.2.2 Leakage Test

Leakage test shall be conducted after the pressure tests have been satisfactorily completed. The duration of each leakage test shall be at least 2 hours, and during the test the water line shall be subjected to not less than 1.38 MPa (200 psi) pressure. Water supply lines designated on the drawings shall be subjected to a pressure equal to 1.38 MPa (200 psi). Leakage is defined as the quantity of water to be supplied into the newly laid pipe, or any valved or approved section thereof, necessary to maintain pressure within 34.5 kPa (5 psi) of the specified leakage test pressure after the pipe has been filled with water and the air expelled. No piping installation will be accepted if leakage exceeds the allowable leakage

which is determined by the following formula:

L = 0.0001351ND(P raised to 1/2 power)

L = Allowable leakage in gallons per hour
N = Number of joints in the length of pipeline tested
D = Nominal diameter of the pipe in inches
P = Average test pressure during the leakage test, in psi gauge

Should any test of pipe disclose leakage greater than that calculated by the above formula, the defective joints shall be located and repaired until the leakage is within the specified allowance, without additional cost to the Government.

3.2.3 Time for Making Test

Except for joint material setting or where concrete thrust blocks necessitate a 5-day delay, pipelines jointed with rubber gaskets, mechanical or push-on joints, or couplings may be subjected to hydrostatic pressure, inspected, and tested for leakage at any time after partial completion of backfill. Cement-mortar lined pipe may be filled with water as recommended by the manufacturer before being subjected to the pressure test and subsequent leakage test.

3.2.4 Concurrent Hydrostatic Tests

The Contractor may elect to conduct the hydrostatic tests using either or both of the following procedures. Regardless of the sequence of tests employed, the results of pressure tests, leakage tests, and disinfection shall be satisfactory as specified. All replacement, repair or retesting required shall be accomplished by the Contractor at no additional cost to the Government.

a. Pressure test and leakage test may be conducted concurrently.

b. Hydrostatic tests and disinfection may be conducted concurrently, using the water treated for disinfection to accomplish the hydrostatic tests. If water is lost when treated for disinfection and air is admitted to the unit being tested, or if any repair procedure results in contamination of the unit, disinfection shall be reaccomplished.

3.3 DISINFECTION

3.3.1 Bacteriological Disinfection

Before acceptance of potable water operation, each unit of completed waterline shall be disinfected as specified herein. After pressure tests have been made, the unit to be disinfected shall be thoroughly flushed with water until all entrained dirt and mud have been removed before introducing the chlorinating material. The chlorinating material shall be either liquid chlorine, calcium hypochlorite, or sodium hypochlorite, conforming to paragraph MISCELLANEOUS ITEMS. The chlorinating material shall provide a dosage of not less than 50 ppm and shall be introduced into the water lines in an approved manner. Polyvinyl Chloride (PVC) pipe lines shall be chlorinated using only the above specified chlorinating material in solution. In no case will the agent be introduced into the line in a dry solid state. The treated water shall be retained in the pipe long enough to destroy all non-spore-forming bacteria. Except where a shorter period

is approved, the retention time shall be at least 24 hours and shall produce not less than 25 ppm of free chlorine residual throughout the line at the end of the retention period. All valves on the lines being disinfected shall be opened and closed several times during the contact period. The line shall then be flushed with clean water until the residual chlorine is reduced to less than 1.0 ppm. During the flushing period, each fire hydrant on the line shall be opened and closed several times. From several points in the unit, personnel from the Contractor's commercial laboratory shall take at least 3 water samples from different points, approved by the Contracting Officer, in proper sterilized containers and perform a bacterial examination in accordance with state approved methods. The commercial laboratory must be certified by the state's approving authority for examination of potable water. The disinfection shall be repeated until tests indicate the absence of pollution for at least 2 full days. The unit will not be accepted until satisfactory bacteriological results have been obtained.

3.3.2 Lead Residual

Following the bacteriological disinfection and testing, the system shall be flushed with a sufficient velocity of water and sufficient tests performed at each hot- and cold-water discharge point until no more than 15 ppb lead residuals remain in the system. All tests and samples shall be performed in accordance with state and, if applicable, Federal regulations. Samples for testing are to be collected after a 6-hour continuous period of no flushing, and will be considered first draw samples. The commercial laboratory must be certified by the state's approving authority for examination of potable water. Lead residual test results are to be submitted to the Contracting Officer. The system will not be accepted until satisfactory bacteriological results and lead residual test results have been obtained. All flushing and testing for lead residuals, including all costs, are the responsibility of the Contractor.

3.4 CLEANUP

Upon completion of the installation of water lines, and appurtenances, all debris and surplus materials resulting from the work shall be removed.

-- End of Section --

SECTION 02685

GAS DISTRIBUTION SYSTEM

PART 1 GENERAL

1.1 REFERENCES

The publications listed below form a part of this specification to the extent referenced. The publications are referred to in the text by basic designation only.

AMERICAN GAS ASSOCIATION (AGA)

AGA-01	(1989) A.G.A. Plastic Pipe Manual for Gas Service

AMERICAN NATIONAL STANDARDS INSTITUTE (ANSI)

ANSI B109.2	(1992) Diaphragm Type Gas Displacement Meters (Over 500 Cubic Feet per Hour Capacity)

AMERICAN PETROLEUM INSTITUTE (API)

API Spec 5L	(1995) Line Pipe
API Spec 6D	(1994; Supple June 1996) Pipeline Valves, (Gate, Plug, Ball, and Check Valves)

AMERICAN SOCIETY FOR TESTING AND MATERIALS (ASTM)

ASTM A 53	(1996) Pipe, Steel, Black and Hot-Dipped, Zinc-Coated Welded and Seamless
ASTM A 181	(1995b) Forgings, Carbon Steel, for General-Purpose Piping
ASTM D 3308	(1991a) PTFE Resin Skived Tape

AMERICAN SOCIETY OF MECHANICAL ENGINEERS (ASME)

ASME B1.20.1	(1983; R 1992) Pipe Threads, General Purpose (Inch)
ASME B16.5	(1988; Errata Oct 1988; B16.5a) Pipe Flanges and Flanged Fittings
ASME B16.9	(1993) Factory-Made Wrought Steel Buttwelding Fittings
ASME B16.11	(1991) Forged Fittings, Socket-Welding and Threaded
ASME B16.21	(1992) Nonmetallic Flat Gaskets for Pipe Flanges

ASME B16.34	(1988) Valves - Flanged, Threaded, and Welding End
ASME B31.8	(1995) Gas Transmission and Distribution Piping Systems

CODE OF FEDERAL REGULATIONS (CFR)

49 CFR 192	Transportation of Natural and Other Gas by Pipeline: Minimum Federal Safety Standards

MANUFACTURERS STANDARDIZATION SOCIETY OF THE VALVE AND FITTINGS INDUSTRY (MSS)

MSS SP-25	(1993) Standard Marking System for Valves, Fittings, Flanges and Unions

NACE INTERNATIONAL (NACE)

NACE RP0185	(1985) Extruded, Polyolefin Resin Coating Systems for Underground or Submerged Pipe
NACE RP0274	(1993) High Voltage Electrical Inspection of Pipeline Coatings Prior to Installation

STEEL STRUCTURES PAINTING COUNCIL (SSPC)

SSPC Paint 25	(1991) Red Iron Oxide, Zinc Oxide, Raw Linseed Oil and Alkyd Primer (Without Lead and Chromate Pigments)
SSPC Paint 104	(1991) White or Tinted Alkyd Paint
SSPC SP 1	(1982) Solvent Cleaning
SSPC SP 3	(1995) Power Tool Cleaning
SSPC SP 6	(1994) Commercial Blast Cleaning
SSPC SP 7	(1994) Brush-Off Blast Cleaning

UNDERWRITERS LABORATORIES (UL)

UL-06	(1996) Gas and Oil Equipment Directory

1.2 GENERAL REQUIREMENTS

1.2.1 Welding Steel Piping

Welding and nondestructive testing procedures for pressure piping are specified in Section 15052 WELDING, PRESSURE PIPING. Structural members shall be welded in accordance with Section 05055 WELDING, STRUCTURAL.

1.2.2 Standard Products

Materials and equipment shall be the standard products of a manufacturer regularly engaged in the manufacture of the products and shall essentially duplicate items that have been in satisfactory use for at least 2 years prior to bid opening. Asbestos or products containing asbestos shall not

be used. Equipment shall be supported by a service organization that is, in the opinion of the Contracting Officer, reasonably convenient to the site. Valves, flanges, and fittings shall be marked in accordance with MSS SP-25.

1.2.3 Verification of Dimensions

The Contractor shall become familiar with all details of the work, verify all dimensions in the field, and shall advise the Contracting Officer of any discrepancy before performing the work.

1.2.4 Handling

Pipe and components shall be handled carefully to ensure a sound, undamaged condition. Particular care shall be taken not to damage pipe coating. No pipe or material of any kind shall be placed inside another pipe or fitting after the coating has been applied, except as specified in paragraph INSTALLATION. Plastic pipe shall be handled in conformance with AGA-01.

1.3 SUBMITTALS

Government approval is required for submittals with a "GA" designation; submittals having an "FIO" designation are for information only. The following shall be submitted in accordance with Section 01330 SUBMITTAL PROCEDURES:

SD-04 Drawings

Pipe, Fittings, and Associated Materials; GA|ED.

Drawings shall contain complete schematic and piping diagrams and any other details required to demonstrate that the system has been coordinated and will properly function as a unit. Drawings shall show proposed layout and anchorage of the system and appurtenances, and equipment relationship to other parts of the work including clearances for maintenance and operation.

SD-07 Schedules

Equipment and Materials; GA|ED.

A complete list of equipment and materials, including manufacturer's descriptive and technical literature, performance charts and curves, catalog cuts, and installation instructions, including, but not limited to the following:

a. Dielectric Unions and Flange Kits.

b. Meters.

c. Pressure Reducing Valves.

d. Regulators.

e. Emergency Gas Supply Connection.

Spare Parts Data; FIO;AR.

Spare parts lists for each different item of material and equipment specified, after approval of the detail drawings and not later than 2

months prior to the date of beneficial occupancy. The data shall include a complete list of parts and supplies, with current unit prices and source of supply.

Notification; FIO;AR.

Notification of the Contractor's schedule for making connections to existing gas lines, at least 10 days in advance.

SD-08 Statements

Welding Steel Piping; FIO;AR.

A copy of qualified welding procedures along with a list of names and identification symbols of performance qualified welders and welding operators.

Connection and Abandonment Procedures; GA|ED.

A copy of procedures for gas line tie in, hot taps, abandonment/removal or demolition, purging, and plugging as applicable in accordance with ASME B31.8.

SD-13 Certificates

Utility Work; FIO;AR.

Certification from the Operating Agency/Utility Company that work for which the Utility is responsible has been completed.

Training; FIO;AR.

A copy of each inspector's and jointer's training certificate with respective test results.

SD-19 Operation and Maintenance Manuals

Gas Distribution System; FIO;AR.

Six copies, in booklet form and indexed, of site specific natural gas operation and maintenance manual for each gas distribution system including system operation, system maintenance, equipment operation, and equipment maintenance manuals described below. If operation and maintenance manuals are provided in a common volume, they shall be clearly differentiated and separately indexed.

The System Operation Manual shall include but not be limited to the following:

a. Maps showing piping layout and locations of all system valves and gas line markers.

b. Step-by-step procedures required for system startup, operation, and shutdown. System components and equipment shall be indexed to the gas maps.

c. Isolation procedures and valve operations to shut down or isolate each section of the system. Valves and other system components shall be indexed to the gas maps.

d. Descriptions of Site Specific Standard Operation Procedures including permanent and temporary pipe repair procedures, system restart and test procedures for placing repaired lines back in service, and procedures for abandoning gas piping and system components.

e. Descriptions of Emergency Procedures including: isolation procedures including required valve operations with valve locations indexed to gas map, recommended emergency equipment, checklist for major emergencies and procedures for connecting emergency gas supply.

The Equipment Operation Manual shall include but not be limited to detail drawings, equipment data, and manufacturer supplied operation manuals for all equipment, valves and system components.

The System Maintenance Manuals shall include but not be limited to:

a. Maintenance check list for entire gas distribution system.

b. Descriptions of site specific standard maintenance procedures.

c. Maintenance procedures for installed cathodic protection systems.

d. Piping layout, equipment layout, and control diagrams of the systems as installed.

e. Identification of pipe materials and manufacturer by location, pipe repair procedures, and jointing procedures at transitions to other piping materials or piping from different manufacturer.

The Equipment Maintenance Manuals shall include but not be limited to the following:

a. Identification of valves and other equipment by materials, manufacturer, vendor identification and location.

b. Maintenance procedures and recommended maintenance tool kits for all valves and equipment.

c. Recommended repair methods, either field repair, factory repair, or whole-item replacement for each valve component or piece of equipment or component item.

d. Routine maintenance procedures, possible breakdowns and repairs, and troubleshooting guide.

PART 2 PRODUCTS

2.1 PIPE, FITTINGS, AND ASSOCIATED MATERIALS

2.1.1 Steel Pipe

Steel pipe shall conform to ASTM A 53, Grade A or B, Type E or S, Schedule 40; or API Spec 5L seamless or electric resistance welded, Schedule 40, black steel pipe as specified in ASME B31.8. Furnace buttwelded pipe may be used in sizes 40 mm (1-1/2 inches) and smaller.

2.1.2 Small Fittings

Fittings 40 mm (1-1/2 inches) and smaller shall conform to ASME B16.11.

2.1.3 Fittings, 50 mm (2 Inches) and Larger

Pipe flanges and flanged fittings including bolts, nuts, and bolt patterns shall be in accordance with ASME B16.5, Class 150. Buttweld fittings shall be in accordance with ASME B16.9. Weld neck flanges shall be used.

2.1.4 Steel Forged Branch Connections

Connections shall conform to ASTM A 181, Class 60, carbon steel.

2.1.5 Flange Gaskets

Gaskets shall be non-asbestos compressed material in accordance with ASME B16.21, 1.6 mm (1/16 inch) minimum thickness, full face or self-centering flat ring type. The gaskets shall contain aramid fibers bonded with nitrile butadiene rubber (NBR), or glass fibers bonded with polytetrafluorethylene, suitable for maximum 315 degrees C service and meeting applicable requirements of ASME B31.8.

2.1.6 Pipe Threads

Pipe threads shall conform to ASME B1.20.1.

2.1.7 Sealants for Steel Pipe Threaded Joints

2.1.7.1 Sealing Compound

Joint sealing compound shall be as listed in UL-06, Class 20 or less.

2.1.7.2 Tape

Polytetrafluoroethylene tape shall conform to ASTM D 3308.

2.1.8 Identification

Pipe flow markings and metal tags for each valve, meter, and regulator shall be provided as required by the Contracting Officer.

2.1.9 Insulating Joint Materials

Insulating joint materials shall be provided between flanged or threaded metallic pipe systems where shown to isolate galvanic or electrolytic action.

2.1.9.1 Threaded Joints

Joints for threaded pipe shall be steel body nut type dielectric type unions with insulating gaskets.

2.1.9.2 Flanged Joints

Joints for flanged pipe shall consist of full face sandwich-type flange insulating gasket of the dielectric type, insulating sleeves for flange bolts and insulating washers for flange nuts.

2.2 VALVES

Valves shall be suitable for shutoff or isolation service and shall conform to the following:

2.2.1 Steel Valves

Steel valves 40 mm (1-1/2 inches) and smaller installed underground shall conform to ASME B16.34, carbon steel, socket weld ends, with square wrench operator adaptor. Steel valves 40 mm (1-1/2 inches) and smaller installed aboveground shall conform to ASME B16.34, carbon steel, socket weld or threaded ends with handwheel or wrench operator. Steel valves 50 mm (2 inches) and larger installed underground shall conform to API Spec 6D, carbon steel, buttweld ends, Class 150 with square wrench operator adaptor. Steel valves 50 mm (2 inches) and larger installed aboveground shall conform to API Spec 6D, carbon steel, buttweld or flanged ends, Class 150 with handwheel or wrench operator.

2.3 PRESSURE REGULATORS

Regulators shall have ferrous bodies, shall provide backflow and vacuum protection, and shall be designed to meet the pressure, load and other service conditions.

2.3.1 Service Line Regulators

Pressure regulators for individual service lines shall have ferrous bodies. Regulator shall be capable of reducing distribution line pressure to pressures required for users. Regulators shall be provided where gas will be distributed at pressures in excess of 2.5 kPa (10 inches of water column). Pressure relief shall be set at a lower pressure than would cause unsafe operation of any connected user. Regulator shall have single port with orifice diameter no greater than that recommended by the manufacturer for the maximum gas pressure at the regulator inlet. Regulator valve vent shall be of resilient materials designed to withstand flow conditions when pressed against the valve port. Regulator shall be capable of regulating downstream pressure within limits of accuracy and shall be capable of limiting the buildup of pressure under no-flow conditions to 50 percent or less of the discharge pressure maintained under flow conditions. Regulator shall have a self contained service regulator. Regulator pipe connections shall not exceed 50 mm (2 inch) size. Vent lines to be run to outside of building.

2.4 METERS

Meters shall conform to ANSI B109.2. Meters shall be pedestal mounted. Meters shall be provided with over-pressure protection as specified in ASME B31.8. Meters shall be suitable for accurately measuring and handling gas at pressures, temperatures, and flow rates indicated.

2.5 EMERGENCY GAS SUPPLY CONNECTION

The emergency gas supply connection shall consist of piping (same size as service line) and accessories that will enable a portable, commercial-sized gas cylinder system to be connected to the gas piping system. This connection shall be capped to prevent gas leakage with a lockable manual valve located to be capable of shutting off flow. The entire assembly should be contained in a weatherproof, lockable box. The box shall contain permanently installed written instructions stating the type and pressure of

the gas allowed to be connected to the line. The instructions shall also indicate and provide specific instruction for testing of the integrity of the building's gas system with an inert gas before the fuel gas connection is made. A subplate shall be provided in the box that is required to be unbolted to gain access to the connection. The subplate shall contain a warning regarding the potential consequences of using gas other than that specified or of failing to test system integrity before hooking up emergency fuel supply.

2.6 PROTECTIVE COVERING MATERIALS

2.6.1 Thermoplastic Resin Coating System

Continuously extruded polyethylene and adhesive coating system materials shall conform to NACE RP0185, Type A.

PART 3 EXECUTION

3.1 EXCAVATION AND BACKFILLING

Earthwork shall be as specified in Section 02316 EXCAVATION, TRENCHING, AND BACKFILLING FOR UTILITIES SYSTEMS.

3.2 GAS MAINS

Pipe for gas mains shall be steel. Steel pipe and fittings shall be coated with protective covering as specified.

3.3 SERVICE LINES AND EMERGENCY GAS SUPPLY CONNECTION

Service lines shall be constructed of materials specified for gas mains and shall extend from a gas main to and including the point of delivery within 1.5 meters (5 feet) of the building. The point of delivery is the meter set assembly, service regulator and shutoff valve. The service lines shall be connected to the gas mains as indicated. Where indicated, service line shall be provided with an isolation valve of the same size as the service line. The service lines shall be as short and as straight as practicable between the point of delivery and the gas main and shall not be bent or curved laterally unless necessary to avoid obstructions or otherwise permitted. Service lines shall be laid with as few joints as practicable using standard lengths of pipe. Shorter lengths shall be used only for closures.

3.3.1 Emergency Gas Supply Connection

Provide an aboveground locked, valved and capped emergency gas supply connection downstream of the pressure regulator. The connection shall be located outside of the building within 300 mm (12 inches) of the exterior wall and installed in a weatherproof box which is mounted on the exterior wall and clearly marked with an appropriate metal sign mounted on wall above.

3.4 WORKMANSHIP AND DEFECTS

Pipe, tubing, and fittings shall be clear and free of cutting burrs and defects in structure or threading and shall be thoroughly brushed and blown free of chips and scale. Defective pipe, tubing, or fittings shall be replaced and shall not be repaired.

3.5 PROTECTIVE COVERING

3.5.1 Protective Covering for Underground Steel Pipe

Except as otherwise specified, protective coverings shall be applied mechanically in a factory or field plant especially equipped for the purpose. Valves and fittings that cannot be coated and wrapped mechanically shall have the protective covering applied by hand, preferably at the plant that applies the covering to the pipe. Joints shall be coated and wrapped by hand. Hand coating and wrapping shall be done in a manner and with materials that will produce a covering equal in thickness to that of the covering applied mechanically.

3.5.1.1 Thermoplastic Resin Coating System

The coating system shall conform to NACE RP0185, Type A. The exterior of the pipe shall be cleaned to a commercial grade blast cleaning finish in accordance with SSPC SP 6. Adhesive compound shall be applied to the pipe. Immediately after the adhesive is applied, a seamless tube of polyethylene shall be extruded over the adhesive to produce a bonded seamless coating. The nominal thickness of the pipe coating system shall be 0.25 mm (10 mils) (plus or minus 10 percent) of adhesive and 1.0 mm (40 mils) (plus or minus 10 percent) of polyethylene for pipes up to 400 mm (16 inches) in diameter. For pipes 450 mm (18 inches) and larger in diameter, the pipe coating system thickness shall be 0.25 mm (10 mils) (plus or minus 10 percent) adhesive and 1.5 mm (60 mils) (plus or minus 10 percent) polyethylene. Joint coating and field repair material shall be applied as recommended by the coating manufacturer and shall be one of the following:

a. Heat shrinkable polyethylene sleeves.

b. Polyvinyl chloride pressure-sensitive adhesive tape.

c. High density polyethylene/bituminous rubber compound tape.

The coating system shall be inspected for holes, voids, cracks, and other damage during installation.

3.5.1.2 Inspection of Pipe Coatings

Any damage to the protective covering during transit and handling shall be repaired before installation. After field coating and wrapping has been applied, the entire pipe shall be inspected by an electric holiday detector with impressed current set at a value in accordance with NACE RP0274 using a full-ring, spring-type coil electrode. The holiday detector shall be equipped with a bell, buzzer, or other type of audible signal which sounds when a holiday is detected. All holidays in the protective covering shall be repaired immediately upon detection. The Contracting Officer reserves the right to inspect and determine the suitability of the detector. Labor, materials, and equipment necessary for conducting the inspection shall be furnished by the Contractor.

3.5.2 Protective Covering for Aboveground Piping Systems

Finish painting shall conform to the applicable paragraphs of Section 09900 PAINTING, GENERAL and as follows:

3.5.2.1 Ferrous Surfaces

Shop primed surfaces shall be touched up with ferrous metal primer same type paint as the shop primer. Surfaces that have not been shop primed shall be solvent-cleaned in accordance with SSPC SP 1. Surfaces that contain loose rust, loose mill scale, and other foreign substances shall be mechanically cleaned by power wire brushing in accordance with SSPC SP 3 or brush-off blast cleaned in accordance with SSPC SP 7 and primed with ferrous metal primer in accordance with SSPC Paint 25. Primed surfaces shall be finished with two coats of exterior alkyd paint conforming to SSPC Paint 104.

3.5.2.2 Nonferrous Surfaces

Nonferrous surfaces shall not be painted.

3.5.3 Protective Covering for Piping in Valve Boxes and Manholes

Piping in valve boxes or manholes shall receive protective coating as specified for underground steel pipe.

3.6 INSTALLATION

Gas distribution system and equipment shall be installed in conformance with the manufacturer's recommendations and applicable sections of ASME B31.8 and 49 CFR 192. Abandoning existing gas piping shall be done in accordance with ASME B31.8. Pipe shall be cut without damaging the pipe. Unless otherwise authorized, cutting shall be done by an approved type of mechanical cutter. Wheel cutters shall be used where practicable. On steel pipe 150 mm (6 inches and larger, an approved gas-cutting-and-beveling machine may be used.

3.6.1 Installing Pipe Underground

Gas mains and service lines shall be graded as indicated. Joints in steel pipe shall be welded except as otherwise permitted for installation of valves. Mains shall have 600 mm minimum cover; service lines shall have 485 mm minimum cover; and both mains and service lines shall be placed on firmly compacted select material for the full length. Where indicated, the main shall be encased, bridged, or designed to withstand any anticipated external loads as specified in ASME B31.8. The encasement material shall be standard weight black steel pipe with a protective coating as specified. The pipe shall be separated from the casing by insulating spacers and sealed at the ends with casing bushings. Trench shall be excavated below pipe grade, bedded with bank sand, and compacted to provide full-length bearing. Laying the pipe on blocks to produce uniform grade will not be permitted. The pipe shall be clean inside before it is lowered into the trench and shall be kept free of water, soil, and all other foreign matter that might damage or obstruct the operation of the valves, regulators, meters, or other equipment. When work is not in progress, open ends of pipe or fittings shall be securely closed by expandable plugs or other suitable means. Minor changes in line or gradient of pipe that can be accomplished through the natural flexibility of the pipe material without producing permanent deformation and without overstressing joints may be made when approved. Changes in line or gradient that exceed the limitations specified shall be made with fittings. When cathodic protection is furnished, electrically insulated joints or flanges shall be provided. After laying of pipe and testing, trench shall be backfilled in accordance with Section 02316EXCAVATION, TRENCHING AND BACKFILLING FOR UTILITY SYSTEMS.

3.6.2 Installing Pipe Aboveground

Aboveground piping shall be protected against dirt and other foreign matter as specified for underground piping. Joints in steel pipe shall be welded; however joints in pipe 40 mm (1-1/2 inches) in diameter and smaller may be threaded; joints may also be threaded to accommodate the installation of valves. Flanges shall be of the weld neck type to match wall thickness of pipe.

3.7 PIPE JOINTS

Pipe joints shall be designed and installed to effectively sustain the longitudinal pullout forces caused by the contraction of piping or superimposed loads.

3.7.1 Threaded Steel Joints

Threaded joints in steel pipe shall have tapered threads evenly cut and shall be made with UL approved graphite joint sealing compound for gas service or polytetrafluoroethylene tape applied to the male threads only. Caulking of threaded joints to stop or prevent leaks will not be permitted.

3.7.2 Welded Steel Joints

Gas pipe weldments shall be as indicated. Changes in direction of piping shall be made with welding fittings only; mitering or notching pipe to form elbows and tees or other similar type construction will not be permitted. Branch connection may be made with either welding tees or forged branch outlet fittings. Branch outlet fittings shall be forged, flared for improvement of flow where attached to the run, and reinforced against external strains. Beveling, alignment, heat treatment, and inspection of weld shall conform to ASME B31.8. Weld defects shall be removed and repairs made to the weld, or the weld joints shall be entirely removed and rewelded. After filler metal has been removed from its original package, it shall be protected or stored so that its characteristics or welding properties are not affected adversely. Electrodes that have been wetted or have lost any of their coating shall not be used.

3.8 VALVE BOXES

Valve boxes of cast iron not less than 4.7 mm (3/16 inch) thick shall be installed at each underground valve except where concrete or other type of housing is indicated. Valve boxes shall be provided with locking covers that require a special wrench for removal. Wrench shall be furnished for each box. The word "gas" shall be cast in the box cover. When the valve is located in a roadway, the valve box shall be protected by a suitable concrete slab at least 1 square meter. When in a sidewalk, the top of the box shall be in a concrete slab 600 mm square and set flush with the sidewalk. Boxes shall be adjustable extension type with screw or slide-type adjustments. Valve boxes shall be separately supported, not resting on the pipe, so that no traffic loads can be transmitted to the pipe. Valves shall only be located in valve boxes or inside of buildings.

3.9 PRESSURE REGULATOR INSTALLATION

3.9.1 Service Line Regulators

A shutoff valve, meter set assembly, and service regulator shall be installed on the service line outside the building. An insulating joint

shall be installed on the inlet side of the meter set assembly and service regulator and shall be constructed to prevent flow of electrical current. A 10 mm (3/8 inch) tapped fitting equipped with a plug shall be provided on both sides of the service regulator for installation of pressure gauges for adjusting the regulator. All service regulator vents and relief vents shall terminate in the outside air in rain and insect resistant fittings. The open end of the vent shall be located where gas can escape freely into the atmosphere, away from any openings into the building and above areas subject to flooding.

3.10 METER INSTALLATION

Meters shall be installed in accordance with ASME B31.8. Permanent gas meters shall be installed with provisions for isolation and removal for calibration and maintenance, and shall be suitable for operation in conjunction with an energy monitoring and control system.

3.11 CONNECTIONS TO EXISTING LINES

Connections between new work and existing gas lines, where required, shall be made in accordance with ASME B31.8 using proper fittings to suit the actual conditions. When connections are made by tapping into a gas main, the connecting fittings shall be the same size as the pipe being connected.

3.11.1 Connection to Government Owned/Operated Gas Lines

The Contractor shall provide connections to the existing gas lines in accordance with approved procedures. Deactivation of any portion of the existing system shall only be done at the valve location shown on the drawings. Reactivation of any existing gas lines will only be done by the Government. The Contractor's Connection and Abandonment Plan shall be submitted and approved prior to making any connections to existing gas lines. This plan shall include the Operating Agency's required procedures which may be obtained from Engineering Plans and Services, ANMC-PWP, Bldg. 219, Ft. Meade, MD.. The Contractor shall notify the Contracting Officer, in writing, 10 days before connections to existing lines are to be made.

a. If facilities are abandoned in place, they shall be physically disconnected from the piping system. The open ends of all abandoned facilities shall be purged, capped, plugged or otherwise effectively sealed. Abandonment shall not be completed until it has been determined that the volume of gas or liquid hydrocarbons contained within the abandoned section poses no potential hazard. Air or inert gas may be used for purging, or the facility may be filled with water or other inert material. If air is used for purging, the Contractor shall ensure that a combustible mixture is not present after purging.

b. When a main is abandoned, together with the service lines connected to it, only the customer's end of such service lines is required to be sealed as stipulated above.

c. Service lines abandoned from the active mains shall be disconnected as close to the main as practicable.

d. All valves left in the abandoned segment shall be closed.

e. All abovegrade valves, risers, and vault and valve box covers shall be removed. Vault and valve box voids shall be filled with

suitable compacted backfill material.

3.12 CATHODIC PROTECTION

Cathodic protection shall be provided for all metallic gas piping installed underground and shall be installed as specified in Section 13110CATHODIC PROTECTION SYSTEM (SACRIFICIAL ANODE).

3.13 TESTS

3.13.1 Pressure and Leak Tests

The system of gas mains and service lines shall be tested after construction and before being placed in service using air as the test medium. The normal operating pressure for the system is 70 kPa. The test pressure is 210 kPa. Prior to testing the system, the interior shall be blown out, cleaned and cleared of all foreign materials. All meters, regulators, and controls shall be removed before blowing out and cleaning and reinstalled after clearing of all foreign materials. Testing of gas mains and service lines shall be done with due regard for the safety of employees and the public during the test. Persons not working on the test operations shall be kept out of the testing area while testing is proceeding. The test shall be made on the system as a whole or on sections that can be isolated. Joints in sections shall be tested prior to backfilling when trenches must be backfilled before the completion of other pipeline sections. The test shall continue for at least 24 hours from the time of the initial readings to the final readings of pressure and temperature. The initial test readings of the instrument shall not be made for at least 1 hour after the pipe has been subjected to the full test pressure, and neither the initial nor final readings shall be made at times of rapid changes in atmospheric conditions. The temperatures shall be representative of the actual trench conditions. There shall be no indication of reduction of pressure during the test after corrections have been made for changes in atmospheric conditions in conformity with the relationship T(1)P(2)=T(2)P(1), in which T and P denote absolute temperature and pressure, respectively, and the numbers denote initial and final readings. During the test, the entire system shall be completely isolated from all compressors and other sources of air pressure. Each joint shall be tested by means of soap and water or an equivalent nonflammable solution prior to backfilling or concealing any work. The testing instruments shall be approved by the Contracting Officer. All labor, materials and equipment for conducting the tests shall be furnished by the Contractor and shall be subject to inspection at all times during the tests. The Contractor shall maintain safety precautions for air pressure testing at all times during the tests.

-- End of Section --

SECTION 02714

EXTERIOR PAVEMENT DRAINAGE LAYER (RAPID DRAINAGE MATERIAL (RDM)) AND INTERIOR PAVEMENT BASE COURSE

PART 1 GENERAL

1.1 REFERENCES

The publications listed below form a part of this specification to the extent referenced. The publications are referred to in the text by basic designation only and represent the latest edition in force when this contract is awarded.

AMERICAN SOCIETY FOR TESTING AND MATERIALS (ASTM)

ASTM C 29	Unit Weight and Voids in Aggregate
ASTM C 88	Soundness of Aggregates by Use of Sodium Sulfate or Magnesium Sulfate
ASTM C 117	Materials Finer Than 75 micrometer (No. 200) Sieve in Mineral Aggregates by Washing
ASTM C 131	Resistance to Degradation of Small-Size Coarse Aggregate by Abrasion and Impact in the Los Angeles Machine
ASTM C 136	Sieve Analysis of Fine and Coarse Aggregates
ASTM D 75	Sampling Aggregates
ASTM D 2487	Classification of Soils for Engineering Purposes (Unified Soil Classification System)
ASTM D 2922	Density of Soil and Soil-Aggregate in Place by Nuclear Methods (Shallow Depth)
ASTM D 3017	Water Content of Soil and Rock In Place by Nuclear Methods (Shallow Depth)
ASTM E 548	General Criteria Used for Evaluating Laboratory Competence

1.2 SYSTEM DESCRIPTION

The Contractor shall build a drainage layer for the pavements as indicated and in accordance with the following subparagraphs. Base courses for interior pavements shall also be as indicated. All work shall also conform

to the requirements shown on the contract drawings.

1.2.1 Aggregate Drainage Layer

A drainage layer consisting of rapid draining materials (RDM) meeting the gradations of Table I.

1.2.2 Base Course for Interior Pavements

Base course for interior pavements is a durable aggregate meeting the gradation and aggregate quality requirements as defined herein, which is uniformly moistened and mechanically stabilized by compaction. All requirement's(AGGREGATE QUALITY, GRADATION, PLACEMENT, COMPACTION, ETC) for the drainage layer indicated in this specification shall also apply to the interior base course in pavement areas unless otherwise indicated. Interior pavement areas are indicated as "Interior Pavements" on the drawings.

1.3 SUBMITTALS

Government approval is required for submittals with a "GA" designation; submittals having an "FIO" designation are for information only. The following shall be submitted in accordance with Section 01330 SUBMITTAL PROCEDURES:

SD-01 Data

Plant, Equipment, Machines, and Tools;FIO;AR

List of proposed equipment to be used in performance of construction work including descriptive data.

SD-09 Reports

Sampling and Testing; FIO;AR.

Copies of field test results within 24 hours of completion of tests.

Approval of Materials; GA|ED.

Material sources and material test results at least 60 days prior to field use.

Evaluation; GA|ED.

Test section construction report within 10 days of completion of the test section.

SD-18 Records

1.4 FIELD COMPACTION

Field compaction requirements shall be based on the results of a test section constructed by the Contractor, using the materials, methods, and equipment proposed for use in the work. The test section shall meet the requirements of paragraph TEST SECTION.

1.5 EQUIPMENT

1.5.1 General Requirements

All plant, equipment, and tools used in the performance of the work will be subject to approval before the work is started and shall be maintained in satisfactory working condition at all times.

1.5.2 Placement Equipment

An asphalt paving machine shall be used to place drainage layer material. Alternate methods may be used if it can be demonstrated in the test section that these methods obtain the specified results.

1.5.3 Compaction Equipment

A dual or single smooth drum vibratory roller weighing 9 to 14 metric tons which provides a maximum compactive effort without crushing the drainage layer aggregate shall be used to compact drainage layer material.

1.5.4 Straightedge

The Contractor shall furnish and maintain at the site, in good condition, one 3.05-meter straightedge for each paver, for use in the testing of the finished surface. Straightedge shall be made available for Government use. Straightedges shall be constructed of aluminum or other lightweight metal and shall have blades of box or box-girder cross section with flat bottom reinforced to insure rigidity and accuracy. Straightedges shall have handles to facilitate movement on pavement.

1.6 WEATHER LIMITATION

Drainage layer material shall be placed when the atmospheric temperature is above 2 degrees C. Areas of completed drainage layer or underlying courses that are damaged by freezing, rainfall, or other weather conditions or by contamination from sediments, dust, dirt, or foreign material shall be corrected by the Contractor to meet specified requirements.

1.7 SAMPLING AND TESTING

1.7.1 General Requirements

Sampling and testing shall be the responsibility of the Contractor. Sampling and testing shall be performed by an approved commercial testing laboratory, or by the Contractor subject to approval. Approval of testing facilities shall be based on requirements indicated in SECTION 00800 TESTING LABORATORIES and SECTION 01451. If the Contractor elects to establish testing facilities of his own, approval of such facilities shall be based on compliance with ASTM E 548, and no work requiring testing will be permitted until the Contractor's facilities have been inspected and approved. The first inspection of the facilities will be at the expense of the Government and any subsequent inspections required because of failure of the first inspection shall be at the expense of the Contractor. Such costs will be deducted from the total amount due the Contractor. Drainage layer materials shall be tested to establish compliance with the specified requirements. Copies of test results shall be furnished to the Contracting Officer within 24 hours of completion of the tests.

1.7.2 Test Results

Results shall verify that materials comply with this specification. When a

material source is changed, the new material will be tested for compliance. When deficiencies are found, the initial analysis shall be repeated and the material already placed shall be retested to determine the extent of unacceptable material. All in-place unacceptable material shall be replaced or modified as directed by the Contracting Officer.

1.7.3 Sampling

Aggregate samples shall be taken in accordance with ASTM D 75.

1.7.4 Test Methods

1.7.4.1 Sieve Analyses

Sieve analyses shall be made in accordance with ASTM C 117 and ASTM C 136.

1.7.4.2 Density Tests

Field density tests shall be made in accordance with ASTM D 2922. When using this method, ASTM D 3017 shall be used to determine the moisture content of the aggregate drainage layer material. The calibration curves furnished with the moisture gauges shall be checked along with density calibration checks as described in ASTM D 3017. The calibration checks of both the density and moisture gauges shall be made by the prepared containers of material method, as described in paragraph "Calibration" of ASTM D 2922, on each different type of material being tested at the beginning of a job and at intervals as directed by the Contracting Officer.

1.7.4.3 Soundness Test

Soundness tests shall be made in accordance with ASTM C 88.

1.7.4.4 Los Angeles Abrasion Test

Los Angeles abrasion tests shall be made in accordance with ASTM C 131.

1.7.4.5 Flat or Elongated Particles Tests

Flat and/or elongated particles tests shall be made in accordance with ASTM D 4791.

1.7.4.6 Fractured Faces Tests

When aggregates are supplied from crushed gravel, approved test methods shall be used to assure the aggregate meets the requirements for fractured faces in paragraph AGGREGATES.

1.7.5 Testing Frequency

1.7.5.1 Aggregate Drainage Layer (Rapid Drainage Material (RDM))

Sieve analyses shall be performed at a rate of at least one test for every 1000 square meters of completed area and not less than one test for each day's production. Field density and moisture content tests shall be performed at a rate of at least one test for every square meters of completed area. Soundness tests, Los Angeles abrasion tests, fractured faces tests and flat and/or elongated particles tests shall be performed at the rate of one test for every 10 sieve analysis tests.

1.7.6 Approval of Materials

1.7.6.1 Aggregate

The aggregate source shall be selected at least 90 days prior to field use in the test section. Tentative approval of the source will be based on certified test results to verify that materials proposed for use meet the contract requirements. Final approval of both the source and the material will be based on test section performance and tests for gradation, soundness, Los Angeles abrasion, flat and/or elongated particles tests and fractured faces tests. For aggregate drainage layer materials, these tests shall be performed on samples taken from the completed and compacted drainage layer course within the test section.

PART 2 PRODUCTS

2.1 AGGREGATES

Aggregates shall consist of clean, sound, hard, durable, angular particles of crushed stone, crushed slag, or crushed gravel which meet the specification requirements. Slag shall be an air-cooled, blast-furnace product having a dry weight of not less than 1040 kg per cubic meter (65 pcf) determined by ASTM C 29. The aggregates shall be free of silt and clay as defined by ASTM D 2487, vegetable matter, and other objectionable materials or coatings.

2.1.1 Aggregate Quality

The aggregate shall have a soundness loss not greater than 18 percent weighted averaged at five cycles when tested in magnesium sulfate in accordance with ASTM C 88. The aggregate shall have a percentage of loss on abrasion not to exceed 40 after 500 revolutions as determined by ASTM C 131. The percentage of flat and/or elongated particles shall be determined by ASTM D 4791 with the following modifications. The aggregates shall be separated into two size fractions. Particles greater than 12.5 mm sieve and particles passing the 12.5 mm sieve and retained on the 4.75 mm sieve. The percentage of flat and/or elongated particles in either fraction shall not exceed 20. A flat particle is one having a ratio of width to thickness greater than 3; an elongated particle is one having a ratio of length to width greater than 3. When the aggregate is supplied from more than one source, aggregate from each source shall meet the requirements set forth herein. When the aggregate is supplied from crushed gravel it shall be manufactured from gravel particles 90 percent of which by weight are retained on the maximum-size sieve listed in TABLE I. In the portion retained on each sieve specified, the crushed gravel shall contain at least 90 percent by weight of crushed pieces having two or more freshly fractured faces with the area of each face being at least equal to 75 percent of the smallest midsectional area of the face. When two fractures are contiguous, the angle between planes of the fractures must be at least 30 degrees in order to count as two fractured faces.

2.1.2 Gradation Requirements

2.1.2.1 Rapid Drainage Material (RDM)

Drainage layer aggregates shall be well graded within the limits specified in TABLE I.

TABLE I. GRADATION OF DRAINAGE LAYER MATERIAL (RDM)

Percentage by Weight Passing Square-Mesh Sieve

Designation	Sieve No.1	Sieve No.2
50 mm	100	
37.5 mm	100	100
25 mm	95-100	96-100
19 mm	82-92	70-83
12.5 mm	62-80	44-70
9.5 mm	59-73	38-59
4.75 mm	40-55	24-33
2.36 mm	5-25	20-29
1.18 mm	0-5	12-21
0.30 mm	0-2	2-8
0.15 mm	---	0-3
0.075 mm	---	---

NOTE 1: A 50% - 50% blend of No. 57 and No. 9 coarse aggregate (ASTM D 448) will fall within the above gradation band No. 1. A 75% - 25% blend of No. 57 coarse aggregate and concrete fine aggregate (ASTM D 448) will fall within gradation band No. 2. Due to the coarseness of this material additional regrading and compaction will be required just prior to placement of the overlying course. The materials shall be blended at the source prior to shipping to the project site.

NOTE 2: Particles having diameters less than 0.02 mm shall not be in excess of 1.5 percent by weight of the total sample tested.

NOTE 3: The values are based on aggregates of uniform specific gravity, and the percentages passing the various sieves may require appropriate correction by the Contracting Officer when aggregates of varying specific gravities are used.

NOTE 4: For RDM, the coefficient of uniformity (CU) shall be greater than 3.5. (CU = D60/D10).

2.1.2.2 Interior Pavement Base Course

Interior slabs-on-grade subject to vehicular traffic are designated as "Interior Pavements" on the drawings. Base Course for interior pavements shall conform to the requirements of Drainage Layer Aggregate (Rapid Drainage Material (RDM))).

PART 3 EXECUTION

3.1 STOCKPILING AGGREGATES

Aggregates shall be stockpiled at locations designated by the Contracting Officer. Stockpile areas shall be cleared and leveled prior to stockpiling aggregates. All aggregates shall be stockpiled so as to prevent segregation and contamination. Aggregates obtained from different sources shall be stockpiled separately.

3.2 TEST SECTION

3.2.1 General

A test section shall be constructed to evaluate the ability to carry traffic and the constructability of the drainage layer and interior pavement base course including required mixing, placement, and compaction procedures. Test section data will be used by the Contracting Officer to determine the required number of passes and the field dry density requirements for full scale production.

3.2.2 Scheduling

The test section shall be constructed a minimum of 30 days prior to the start of full scale production to provide sufficient time for an evaluation of the proposed materials, equipment and procedures including Government QA testing.

3.2.3 Location and Size

The test section may be constructed within a designated paving area as approved by the Contracting Officer. If test results are satisfactory, the section may be retained in place as part of the final work if properly maintained by the contractor. The underlying courses and subgrade preparation, required for the pavement section, shall be completed, inspected and approved in the test section prior to constructing the drainage layer. The test section shall be a minimum of 30 meters long and one full paving lane wide and of the thickness(es) to be used in the project.

3.2.4 Initial Testing

Certified test results, to verify that the materials proposed for use in the test section meet the contract requirements, shall be provided by the Contractor and approved by the Contracting Officer prior to the start of the test section.

3.2.5 Mixing, Placement, and Compaction

Mixing, placement, and compaction shall be accomplished using equipment meeting the requirements of paragraph EQUIPMENT. The contractor shall anticipate a minimum of six passes and a maximum of ten passes of the specified equipment followed by a minimum of one static pass of the roller (without vibration) to seal the surface of each lift. Compaction equipment speed shall be no greater than 2.4 km/hour.

3.2.6 Procedure

3.2.6.1 Aggregate Drainage Layer(RDM) and Interior Pavement Base Course

The test section shall be constructed with aggregate in a moist state so as to establish a correlation between number of roller passes and dry density achievable during field production. Density and moisture content tests shall be conducted at the surface and at intervals of 50 mm of depth down for the total layer thickness, in accordance with ASTM D 2922 and ASTM D 3017. Sieve analysis tests shall be conducted on composite samples, taken adjacent to the density test locations, which represent the total layer thickness. One set of tests (i.e. density, moisture, and sieve analysis) shall be taken before compaction and after each subsequent compaction pass at three separate locations as directed by the Contracting Officer.

Compaction passes and density readings shall continue until the difference between the average dry densities of any two consecutive passes is less than or equal to 8 kg per cubic meter (0.5 pcf) unless otherwise directed by the contracting officer.The test section shall be completed by making one final pass with the roller in the static mode and observing any change in the drainage layer surface texture. Additional test sections shall be constructed and sampled for conformance to specification requirements as directed, if initial test results are unsatisfactory, if a significant variance in dry density of 2 kilograms or more occurs during production, or if there is visible difference in the material or its gradation during production. In no case shall the contractor start production, or resume full production after material variances are observed, without approval by the Contracting Officer.

3.2.7 Evaluation

Within 10 days of completion of the test section, the Contractor shall submit to the Contracting Officer a Test Section Construction Report complete with all required test data and correlations. The Contracting Officer will evaluate the data and provide to the Contractor the required number of passes of the roller, the dry density for field density control during construction, the depth at which to check the density, and the need for a final static pass of the roller.

3.3 PREPARATION OF UNDERLYING COURSE

Prior to constructing the drainage layer, the underlying course shall be cleaned of all foreign materials. During construction, the underlying course shall contain no frozen material. The underlying course shall conform to Section 02300 SITE GRADING AND EARTHWORK FOR ROADWAYS and Section 02722 AGGREGATE BASE COURSE. Ruts or soft yielding spots in the underlying courses having inadequate compaction and deviations of the surface from the requirements set forth herein shall be corrected by loosening and removing soft or unsatisfactory material and by adding approved material, reshaping to line, and grade, and recompacting to specified density. The finished underlying course shall not be disturbed by traffic or other operations and shall be maintained by the Contractor in a satisfactory condition until the drainage layer is placed.

3.4 TRANSPORTING MATERIAL

3.4.1 Aggregate Drainage Layer Material (RDM)

Aggregate drainage layer material shall be transported to the site in a manner which prevents segregation and contamination of materials.

3.5 PLACING

3.5.1 General

Drainage layer material shall be placed on the underlying course in lifts of uniform thickness using equipment meeting the requirements of paragraph EQUIPMENT. When a compacted layer 150 mm or less in thickness is required, the material shall be placed in a single lift. When a compacted layer in excess of 150 mm is required, the material shall be placed in lifts of equal thickness. No lift shall exceed 150 mm or be less than 75 mm when compacted. The lifts shall be so placed that when compacted they will be true to the grades or levels required with the least possible surface disturbance. Where the drainage layer is placed in more than one lift, the

previously constructed lift shall be cleaned of loose and foreign material. Such adjustments in placing procedures or equipment shall be made to obtain true grades and minimize segregation and degradation of the drainage layer material.

3.5.2 Hand Spreading

In areas where machine spreading is impractical, drainage layer material shall be spread by hand. The material shall be spread uniformly in a loose layer so as to prevent segregation along with conforming to the required grade and thickness after compaction.

3.6 COMPACTION REQUIREMENTS

Compaction shall be accomplished using rollers meeting the requirements of paragraph EQUIPMENT and operating at a rolling speed of no greater than 2.4 km per hour. Each lift of drainage material, including shoulders when specified under the shoulders, shall be compacted with the number of passes of the roller as specified by the Contracting Officer. In addition, a minimum field dry density, as specified by the Contracting Officer, shall be maintained. If the required field dry density is not obtained, the number of roller passes shall be adjusted in accordance with paragraph DEFICIENCIES. Excessive rolling resulting in crushing of aggregate particles shall be avoided. In all places not accessible to the rollers, the drainage layer material shall be compacted with mechanical hand operated tampers.

3.7 FINISHING

The top surface of the drainage layer shall be finished after final compaction as determined from the test section. Adjustments in rolling and finishing procedures shall be made to obtain grades and minimize segregation and degradation of the drainage layer material.

3.8 EDGES OF DRAINAGE LAYER

Shoulder material shall be placed along the edges of the drainage layer course in such quantity as will compact to the thickness of the layer being constructed. When the drainage layer is being constructed in two or more lifts, at least a one foot width of the shoulder shall be rolled and compacted simultaneously with the rolling and compacting of each lift of the drainage layer.

3.9 SMOOTHNESS TEST

The surface of the top lift shall not deviate more than 10 mm when tested with a 3.05 meter straightedge applied parallel with and at right angles to the centerline of the area to be paved. Deviations exceeding 10 mm shall be corrected in accordance with paragraph DEFICIENCIES.

3.10 THICKNESS CONTROL

The completed thickness of the drainage layer shall be within 13 mm of the thickness indicated. Thickness shall be measured at intervals providing at least one measurement for each 500square meters of drainage layer. Measurements shall be made in test holes at least 75 mm in diameter. Where the measured thickness is more than 13 mm deficient, such areas shall be corrected in accordance with paragraph DEFICIENCIES. Where the measured thickness is 13 mm more than indicated, it will be considered as conforming

with the requirements plus 13 mm, provided the surface of the drainage layer is within 13 mm of established grade. The average job thickness shall be the average of all job measurements as specified above but within 8 mm of the thickness shown on the drawings.

3.11 DEFICIENCIES

3.11.1 Grade and Thickness

Deficiencies in grade and thickness shall be corrected such that both grade and thickness tolerances are met. In no case will thin layers of material be added to the top surface of the drainage layer to meet grade or increase thickness. If the elevation of the top of the drainage layer is more than 13 mm above the plan grade it shall be trimmed to grade and finished in accordance with paragraph FINISHING. If the elevation of the top surface of the drainage layer is 13 mm or more below the required grade, the surface of the drainage layer shall be scarified to a depth of at least 75 mm, new material shall be added, and the layer shall be blended and recompacted to bring it to grade. Where the measured thickness of the drainage layer is more than 13 mm deficient, such areas shall be corrected by excavating to the required depth and replaced with new material to obtain a compacted lift thickness of at least 75 mm. The depth of required excavation shall be controlled to keep the final surface elevation within grade requirements and to preserve layer thicknesses of materials below the drainage layer.

3.11.2 Density

Density shall be considered deficient if the field dry density test results are below the dry density specified by the Contracting Officer. If the densities are deficient, the layer shall be rolled with 2 additional passes of the specified roller. If the dry density is still deficient, work will be stopped until the cause of the low dry densities can be determined by the Contracting Officer.

3.11.3 Smoothness

Deficiencies in smoothness shall be corrected as if they are deficiencies in grade or thickness. All tolerances for grade and thickness shall be maintained while correcting smoothness deficiencies.

3.12 Disposal of Unsatisfactory Material

Unsuitable base course material that is removed for the required correction of defective areas, and waste material and debris shall be disposed of as specified in paragraph SPOIL AREAS of Section 02300, SITE GRADING AND EARTHWORK FOR ROADWAYS.

-- End of Section --

SECTION 02720

STORM-DRAINAGE SYSTEM

PART 1 GENERAL

1.1 REFERENCES

The publications listed below form a part of this specification to the extent referenced. The publications are referred to in the text by basic designation only.

AMERICAN ASSOCIATION OF STATE HIGHWAY AND TRANSPORTATION OFFICIALS (AASHTO)

AASHTO M 190	(1988) Bituminous Coated Corrugated Metal Culvert Pipe and Pipe Arches
AASHTO M 198	(1994) Joints for Circular Concrete Sewer and Culvert Pipe Using Flexible Watertight Gaskets
AASHTO M 243	(1994) Field Applied Coating of Corrugated Metal Structural Plate for Pipe, Pipe-Arches, and Arches

AMERICAN SOCIETY FOR TESTING AND MATERIALS (ASTM)

ASTM A 48	(1994a) Gray Iron Castings
ASTM A 536	(1984; R 1993) Ductile Iron Castings
ASTM A 760	(1995a) Corrugated Steel Pipe, Metallic-Coated for Sewers and Drains
ASTM A 798	(1994) Installing Factory-Made Corrugated Steel Pipe for Sewers and Other Applications
ASTM B 26	(1996) Aluminum-Alloy Sand Castings
ASTM C 32	(1993) Sewer and Manhole Brick (Made from Clay or Shale)
ASTM C 55	(1995) Concrete Building Brick
ASTM C 62	(1996) Building Brick (Solid Masonry Units Made from Clay or Shale)
ASTM C 76	(1995) Reinforced Concrete Culvert, Storm Drain, and Sewer Pipe
ASTM C 231	(1991b) Air Content of Freshly Mixed Concrete by the Pressure Method
ASTM C 270	(1996a) Mortar for Unit Masonry

ASTM C 425	(1995) Compression Joints for Vitrified Clay Pipe and Fittings
ASTM C 443	(1994) Joints for Circular Concrete Sewer and Culvert Pipe, Using Rubber Gaskets
ASTM C 478	(1994) Precast Reinforced Concrete Manhole Sections
ASTM C 507	(1995a) Reinforced Concrete Elliptical Culvert, Storm Drain, and Sewer Pipe
ASTM C 877	(1994) External Sealing Bands for Noncircular Concrete Sewer, Storm Drain, and Culvert Pipe
ASTM D 1056	(1991) Flexible Cellular Materials - Sponge or Expanded Rubber
ASTM D 1171	(1994) Rubber Deterioration - Surface Ozone Cracking Outdoors or Chamber (Triangular Specimens)
ASTM D 1751	(1983; R 1991) Preformed Expansion Joint Filler for Concrete Paving and Structural Construction (Nonextruding and Resilient Bituminous Types)
ASTM D 1752	(1984; R 1992) Preformed Sponge Rubber and Cork Expansion Joint Fillers for Concrete Paving and Structural Construction
ASTM D 1784	(1992) Rigid Poly(Vinyl Chloride) (PVC) Compounds and Chlorinated Poly(Vinyl Chloride) (CPVC) Compounds
ASTM D 2321	(1989; R 1995) Underground Installation of Thermoplastic Pipe for Sewers and Other Gravity-Flow Applications
ASTM D 3212	(1992) Joints for Drain and Sewer Plastic Pipes Using Flexible Elastomeric Seals
ASTM D 3350	(1993) Polyethylene Plastics Pipe and Fittings Materials
ASTM F 679	(1995) Poly(Vinyl Chloride) (PVC) Large-Diameter Plastic Gravity Sewer Pipe and Fittings

1.2 SUBMITTALS

Government approval is required for submittals with a "GA" designation; submittals having an "FIO" designation are for information only. The following shall be submitted in accordance with Section 01330 SUBMITTAL PROCEDURES:

SD-06 Instructions

Placing Pipe; GA|ED.

Printed copies of the manufacturer's recommendations for installation procedures of the material being placed, prior to installation.

SD-13 Certificates

Pipe Material; GA|ED. Watertight Joints; GA|ED[_____]. Watertight Joints for Roof Drain Field Connection; GA|ED Frame and Cover for Gratings; GA|ED.

Certified copies of test reports demonstrating conformance to applicable pipe specifications, before pipe is installed. Certification on the ability of frame and cover or gratings to carry the imposed live load.

1.3 DELIVERY, STORAGE, AND HANDLING

1.3.1 Delivery and Storage

Materials delivered to site shall be inspected for damage, unloaded, and stored with a minimum of handling. Materials shall not be stored directly on the ground. The inside of pipes and fittings shall be kept free of dirt and debris. Gasket materials and plastic materials shall be protected from exposure to the direct sunlight over extended periods.

1.3.2 Handling

Materials shall be handled in such a manner as to ensure delivery to the trench in sound, undamaged condition. Pipe shall be carried to the trench, not dragged.

PART 2 PRODUCTS

2.1 PIPE FOR CULVERTS AND STORM DRAINS

Pipe for culverts and storm drains shall be of the sizes indicated and shall conform to the requirements specified.

2.1.1 Concrete Pipe

ASTM C 76, Classes III, IV, or V.

2.1.1.1 Reinforced Elliptical Culvert and Storm Drainpipe

ASTM C 507. Horizontal elliptical pipe shall be Class HE-IV.

2.1.2 Corrugated Steel Pipe for Stormwater Management Pond Outfall

2.1.2.1 Fully Bituminous Coated, 10 ga

AASHTO M 190 Type A and ASTM A 760 aluminum coated pipe of:

a. Type I pipe with helical corrugations.

2.1.3 PVC Pipe for Roof Collectors Only

2.1.3.1 Smooth Wall PVC Pipe

ASTM F 679 produced from PVC certified by the compounder as meeting the

requirements of ASTM D 1784, minimum cell class 12454-B.

2.1.4 PE Pipe for Roof Collectors Only

The pipe manufacturer's resin certification indicating the cell classification of PE used to manufacture the pipe shall be submitted prior to installation of the pipe. The minimum cell classification for polyethylene plastic shall apply to each of the seven primary properties of the cell classification limits in accordance with ASTM D 3350.

2.1.4.1 Smooth Wall PE Pipe

ASTM F 667, maximum DR of 21 for pipes 80 to 600 mm in diameter and maximum DR of 26 for pipes 650 to 1200 mm in diameter. Pipe shall be produced from PE certified by the resin producer as meeting the requirements of ASTM D 3350, minimum cell class 324420C.

2.2 DRAINAGE STRUCTURES

2.2.1 Flared End Sections

Sections shall be of a standard design fabricated from concrete reinforced to conform with Class IV pipe.

2.3 MISCELLANEOUS MATERIALS

2.3.1 Concrete

Unless otherwise specified, concrete and reinforced concrete shall conform to the requirements for 30 MPa concrete under Section 03300 CAST-IN-PLACE STRUCTURAL CONCRETE. The concrete mixture shall have air content by volume of concrete, based on measurements made immediately after discharge from the mixer, of 5 to 7 percent when maximum size of coarse aggregate exceeds 37.5 mm. Air content shall be determined in accordance with ASTM C 231. The concrete covering over steel reinforcing shall not be less than 25 mm thick for covers and not less than 40 mm thick for walls and flooring. Concrete covering deposited directly against the ground shall have a thickness of at least 75 mm between steel and ground. Expansion-joint filler material shall conform to ASTM D 1751, or ASTM D 1752, or shall be resin-impregnated fiberboard conforming to the physical requirements of ASTM D 1752.

2.3.2 Mortar

Mortar for pipe joints, connections to other drainage structures, and brick or block construction shall conform to ASTM C 270, Type M, except the maximum placement time shall be 1 hour. The quantity of water in the mixture shall be sufficient to produce a stiff workable mortar but in no case shall exceed 20 liters of water per sack of cement. Water shall be clean and free of harmful acids, alkalies, and organic impurities. The mortar shall be used within 30 minutes after the ingredients are mixed with water. The inside of the joint shall be wiped clean and finished smooth. The mortar head on the outside shall be protected from air and sun with a proper covering until satisfactorily cured.

2.3.3 Brick

Brick shall conform to ASTM C 62, Grade SW; ASTM C 55, Grade S-I or S-II; or ASTM C 32, Grade MS. Mortar for jointing and plastering shall consist

of one part portland cement and two parts fine sand. Lime may be added to the mortar in a quantity not more than 25 percent of the volume of cement. The joints shall be filled completely and shall be smooth and free from surplus mortar on the inside of the structure. Brick structures shall be plastered with 10 mm of mortar over the entire outside surface of the walls. For square or rectangular structures, brick shall be laid in stretcher courses with a header course every sixth course. For round structures, brick shall be laid radially with every sixth course a stretcher course.

2.3.4 Precast Reinforced Concrete Manholes

Precast reinforced concrete manholes shall conform to ASTM C 478. Joints between precast concrete risers and tops [shall be full-bedded in cement mortar and shall be smoothed to a uniform surface on both interior and exterior of the structure] [shall be made with flexible watertight, rubber-type gaskets meeting the requirements of paragraph JOINTS].

2.3.5 Frame and Cover for Gratings

Frame and cover for gratings shall be cast gray iron, ASTM A 48, Class 35B; cast ductile iron, ASTM A 536, Grade 65-45-12; or cast aluminum, ASTM B 26, Alloy 356.OT6. Weight, shape, size, and waterway openings for grates and curb inlets shall be as indicated on the plans.

2.3.6 Joints

2.3.6.1 Flexible Watertight Joints

a. Materials: Flexible watertight joints shall be made with plastic or rubber-type O-ring gaskets for concrete pipe. The design of joints and the physical requirements for plastic gaskets shall conform to AASHTO M 198, and rubber-type gaskets shall conform to ASTM C 443. Factory-fabricated resilient joint materials shall conform to ASTM C 425. Gaskets shall have not more than one factory-fabricated splice. The horizantal elliptical pipes shall have water tight external sealing bands.

2.3.6.2 External Sealing Bands

External sealing bands for concrete pipe shall be 225 mm wide with an outer layer of polyethylene and an underlayer of rubberized mastic. Bands shall come with two steel straps. The installation of band shall be in accordance with the manufacturer. Requirements for external sealing bands shall conform to ASTM C 877.

2.3.6.3 Flexible Watertight, Gasketed Joints

a. Gaskets: When infiltration or exfiltration is a concern for pipe lines, the couplings may be required to have gaskets. The closed-cell expanded rubber gaskets shall be a continuous band approximately 178 mm (7 inches) wide and approximately 9.5 mm (3/8 inch) thick, meeting the requirements of ASTM D 1056, Type 2 A1, and shall have a quality retention rating of not less than 70 percent when tested for weather resistance by ozone chamber exposure, Method B of ASTM D 1171. Rubber O-ring gaskets shall be 20.6 mm (13/16 inch) in diameter for pipe diameters of 914 mm (36 inches) or smaller and 22.2 mm (7/8 inch) in diameter for larger pipe having 12.7 mm (1/2 inch) deep end corrugation. Rubber

O-ring gaskets shall be 34.9 mm (1-3/8 inches) in diameter for pipe having 25 mm (1 inch) deep end corrugations. O-rings shall meet the requirements of AASHTO M 198 or ASTM C 443. Flexible plastic gaskets shall conform to requirements of AASHTO M 198, Type B.

b. Connecting Bands: Connecting bands shall be of the type, size and sheet thickness of band, and the size of angles, bolts, rods and lugs as indicated or where not indicated as specified in the applicable standards or specifications for the pipe. Exterior rivet heads in the longitudinal seam under the connecting band shall be countersunk or the rivets shall be omitted and the seam welded.

2.3.6.4 PVC Plastic Pipes

Joints shall be watertight solvent cement or elastomeric gasket type in accordance with the specification for the pipe and as recommended by the pipe manufacturer.

2.3.6.5 Smooth Wall PE Plastic Pipe

Pipe shall be joined using thermal-molded PVC double ball coupler with O-ring gasket as recommended by the pipe manufacturer. The watertight joint shall meet the requirement of ASTM D 3212 tested at 10.8 psi.

PART 3 EXECUTION

3.1 EXCAVATION FOR PIPE CULVERTS, STORM DRAINS, AND DRAINAGE STRUCTURES

Excavation of trenches and for appurtenances and backfilling for culverts and storm drains shall be in accordance with the applicable portions of Section 02316 EXCAVATION, TRENCHING, AND BACKFILLING FOR UTILITIES SYSTEMS and Section 02300 SITE GRADING AND EARTHWORK FOR ROADWAYS and the requirements specified below.

3.1.1 Trenching

The width of trenches at any point below the top of the pipe shall be not greater than the outside diameter of the pipe plus 450 mm to permit satisfactory jointing and thorough tamping of the bedding material under and around the pipe. Sheeting and bracing where required shall be placed within the trench width as specified. Care shall be taken not to overexcavate. Where trench widths are exceeded, redesign with a resultant increase in cost of stronger pipe or special installation procedures shall be necessary. Cost of this redesign and increased cost of pipe or installation shall be borne by the Contractor without additional cost to the Government.

3.1.2 Removal of Unstable Material

Where wet or otherwise unstable soil incapable of properly supporting the pipe, as determined by the Contracting Officer, is unexpectedly encountered in the bottom of a trench, such material shall be removed to the depth required and replaced to the proper grade with select granular material, compacted as provided in paragraph BACKFILLING. When removal of unstable material is due to the fault or neglect of the Contractor in his performance of shoring and sheeting, water removal, or other specified requirements, such removal and replacement shall be performed at no

additional cost to the government.

3.2 BEDDING

The bedding surface for the pipe shall provide a firm foundation of uniform density throughout the entire length of the pipe.

3.2.1 Concrete Pipe

When no bedding class is specified or detailed on the drawings, concrete pipe shall be bedded carefully in a soil foundation accurately shaped and rounded to conform to the lowest one-fourth of the outside portion of circular pipe or to the lower curved portion of pipe arch for the entire length of the pipe or pipe arch. When necessary, the bedding shall be tamped. Bell holes and depressions for joints shall be only of such length, depth, and width as required for properly making the particular type of joint.

3.2.2 Corrugated Metal Pipe for Stormwater Management Basin

Bedding for corrugated metal pipe shall be in accordance with ASTM A 798. See plans for special requirements with the section of pipe through embankment.

3.2.3 Ductile Iron Pipe

Bedding for ductile iron pipe shall be as shown on the drawings.

3.2.4 Plastic Pipe

Bedding for PVC and PE pipe shall meet the requirements of ASTM D 2321. Bedding, haunching, and initial backfill shall be either Class IB or II material.

3.3 PLACING PIPE

Each pipe shall be carefully examined before being laid, and defective or damaged pipe shall not be used. Plastic pipe shall be protected from exposure to the direct sunlight prior to laying as needed to maintain adequate pipe stiffness and meet installation deflection requirements. Pipelines shall be laid to the grades and alignment indicated. Proper facilities shall be provided for lowering sections of pipe into trenches. Lifting lugs in vertically elongated metal pipe shall be placed in the same vertical plane as the major axis of the pipe. Under no circumstances shall pipe be laid in water, and no pipe shall be laid when trench conditions or weather are unsuitable for such work. Diversion of drainage or dewatering of trenches during construction shall be provided as necessary. Deflection of installed plastic pipe shall not exceed 4.5 percent of the nominal inside diameter. After backfilling has been completed, the Government may perform a deflection test on the entire length of installed plastic pipeline using a mandrel or other suitable device. Any plastic pipe showing deflections in excess of 4.5 percent shall be removed and replaced at the Contractor's expense. All pipe in place shall be inspected before backfilling, and those pipes damaged during placement shall be removed and replaced.

3.3.1 Concrete, and PVC

Laying shall proceed upgrade with spigot ends of bell-and-spigot pipe and

tongue ends of tongue-and-groove pipe pointing in the direction of the flow.

3.3.2 Elliptical and Elliptical Reinforced Concrete Pipe

Placement shall be so that the manufacturer's reference lines designating the top of the pipe will be within 5 degrees of a vertical plane through the longitudinal axis of the pipe. In all backfilling operations, care shall be taken to prevent damage to or misalignment of the pipe.

3.3.3 Corrugated PE Pipe

Laying shall be with the separate sections joined firmly on a bed shaped to line and grade and shall follow manufacturer's recommendations.

3.3.4 Corrugated Metal Pipe

Laying shall be with the separate sections joined firmly together, with the outside laps of circumferential joints pointing upstream, and with longitudinal laps on the sides. Any unprotected metal in the joints shall be coated with bituminous material specified in AASHTO M 190 or AASHTO M 243. Interior coating shall be protected against damage from insertion or removal of struts or tie wires. Lifting lugs shall be used to facilitate moving pipe without damage to exterior or interior coatings. During installation, pipe shall be handled with care to preclude damage to the bituminous coating or paving. Prior to placing backfill, damaged areas of coupling bands and pipe shall be given a coating of bituminous material, specified in AASHTO M 190 or AASHTO M 243. Pipe on which bituminous coating has been damaged to such an extent that satisfactory field repairs cannot be made shall be removed and replaced. Vertical elongation, where indicated, shall be accomplished by factory elongation. Suitable markings or properly placed lifting lugs shall be provided to ensure placement of factory elongated pipe in a vertical plane.

3.4 JOINTS

3.4.1 Concrete

3.4.1.1 Flexible Watertight Joints

Gaskets and jointing materials shall be as recommended by the particular manufacturer in regard to use of lubricants, cements, adhesives, and other special installation requirements. Surfaces to receive lubricants, cements, or adhesives shall be clean and dry. Gaskets and jointing materials shall be affixed to the pipe not more than 24 hours prior to the installation of the pipe, and shall be protected from the sun, blowing dust, and other deleterious agents at all times. Gaskets and jointing materials shall be inspected before installing the pipe; any loose or improperly affixed gaskets and jointing materials shall be removed and replaced. The pipe shall be aligned with the previously installed pipe, and the joint pushed home. If, while the joint is being made the gasket becomes visibly dislocated the pipe shall be removed and the joint remade.

3.4.1.2 External Sealing Band Joint for Noncircular Pipe

Surfaces to receive sealing bands shall be dry and clean. Bands shall be installed in accordance with manufacturer's recommendations.

3.4.2 Corrugated Metal Pipe

3.4.2.1 Flexible Watertight, Gasketed Joints

Installation shall be as recommended by the gasket manufacturer for use of lubricants and cements and other special installation requirements. The gasket shall be placed over one end of a section of pipe for half the width of the gasket. The other half shall be doubled over the end of the same pipe. When the adjoining section of pipe is in place, the doubled-over half of the gasket shall then be rolled over the adjoining section. Any unevenness in overlap shall be corrected so that the gasket covers the end of pipe sections equally. Connecting bands shall then be centered over adjoining sections of pipe, and rods or bolts placed in position and nuts tightened. Band Tightening: The band shall be tightened evenly, even tension being kept on the rods or bolts, and the gasket shall be closely observed to see that it is seating properly in the corrugations. Watertight joints shall remain uncovered for a period of time designated, and before being covered, tightness of the nuts shall be measured with a torque wrench. If the nut has tended to loosen its grip on the bolts or rods, the nut shall be retightened with a torque wrench and remain uncovered until a tight, permanent joint is assured.

3.5 DRAINAGE STRUCTURES

3.5.1 Manholes and Inlets

Construction shall be of precast reinforced concrete, complete with frames and covers or gratings and with fixed galvanized steel ladders where indicated.

3.5.2 Walls and Headwalls

Construction shall be as indicated.

3.6 BACKFILLING AND COMPACTION

Placement, compaction and testing of backfill shall be in accordance with the applicable of Section 02316 EXCAVATION, TRENCHING, AND BACKFILLING FOR UTILITIES SYSTEM.

-- End of Section --

SECTION 02722

AGGREGATE BASE COURSE

PART 1 GENERAL

1.1 REFERENCES

The publications listed below form a part of this specification to the extent referenced. The publications are referred to in the text by basic designation only and represent the latest edition in force when this contract is awarded.

AMERICAN SOCIETY FOR TESTING AND MATERIALS (ASTM)

ASTM C 29	Unit Weight and Voids in Aggregate
ASTM C 127	Specific Gravity and Absorption of Course Aggregate
ASTM C 128	Specific Gravity and Absorption of Fine Aggregate
ASTM C 131	Resistance to Degradation of Small-Size Coarse Aggregate by Abrasion and Impact in the Los Angeles Machine
ASTM C 136	Sieve Analysis of Fine and Coarse Aggregates
ASTM D 75	Sampling Aggregates
ASTM D 422	Particle-Size Analysis of Soils
ASTM D 1556	Density and Unit Weight of Soil in Place by the Sand-Cone Method
ASTM D 1557	Laboratory Compaction Characteristics of Soil Using Modified Effort (56,000 ft-1bf/cu. ft. (2,700 kN-m/cu. m.))
ASTM D 2922	Density of Soil and Soil-Aggregate in Place by Nuclear Methods (Shallow Depth)
ASTM D 3017	Water Content of Soil and Rock in Place by Nuclear Methods (Shallow Depth)
ASTM D 4318	Liquid Limit, Plastic Limit, and Plasticity Index of Soils
ASTM D 4791	Flat or Elongated Particles in Coarse Aggregate
ASTM E 11	Wire-Cloth Sieves for Testing Purposes

AMERICAN ASSOCIATION OF STATE HIGHWAY AND TRANSPORTATION OFFICIALS, STANDARD SPECIFICATIONS FOR TRANSPORTATION MATERIALS AND METHODS OF SAMPLING AND TESTING:

1.2 DEFINITIONS

1.2.1 Dense Graded Aggregate (DGA) Base

Aggregate base as used herein is well graded, durable aggregate uniformly moistened and mechanically stabilized by compaction.

1.2.2 Degree of Compaction

1.2.2.1 DGA Base

Degree of compaction required is expressed as a percentage of the maximum density obtained by the test procedure presented in ASTM D 1557, Procedure C abbreviated hereinafter as percent laboratory maximum density.

1.3 GENERAL

The work specified herein consists of the construction of an aggregate base course. The work shall be performed in accordance with this specification and shall conform to the lines, grades, notes and typical sections shown in the plans. Sources of all materials shall be selected well in advance of the time that materials will be required in the work.

1.4 SUBMITTALS

Government approval is required for submittals with a "GA" designation; submittals having an "FIO" designation are for information only. The following shall be submitted in accordance with Section 01330 SUBMITTAL PROCEDURES:

SD-01 Data

Plant, Equipment, Machines, and Tools; GA|ED.

List of proposed equipment to be used in performance of construction work including descriptive data.

SD-09 Reports

Sampling and Testing; FIO;AR. Field Density; FIO;AR.

Calibration curves and related test results prior to using the device or equipment being calibrated. Copies of field test results within 24 hours after the tests are performed. Certified copies of test results for approval not less than 30 days before material is required for the work.

SD-14 Samples

SD-18 Records

Coarse Aggregate; GA|ED.

A notification stating which type of coarse aggregate is to be used.

1.5 WEATHER LIMITATIONS

Base shall not be constructed when the atmospheric temperature is less than 2 degrees C. Base shall not be constructed on subgrades that are frozen or contain frost. If the temperature falls below 2 degrees C, completed areas shall be protected against any detrimental effects of freezing.

1.6 PLANT, EQUIPMENT, MACHINES, AND TOOLS

1.6.1 General Requirements

Plant, equipment, machines, and tools used in the work shall be subject to approval and shall be maintained in satisfactory working condition at all times. Other compacting equipment may be used in lieu of that specified, where it can be demonstrated that the results are equivalent. The equipment shall be adequate and have the capability of producing the results specified.

1.6.2 Smooth-Drum Vibratory Rollers

Dual or single smooth-drum vibratory rollers shall be the self-propelled type weighing 9 to 14 metric tons, . Wheels of the rollers shall be equipped with adjustable scrapers. The use of vibratory rollers is optional.

1.6.3 Pneumatic-Tired Rollers

Pneumatic-tired rollers shall have four or more tires, each loaded to a minimum of 13,600 kilograms and inflated to a minimum pressure of 1035 kPa. The loading shall be equally distributed to all wheels, and the tires shall be uniformly inflated. Towing equipment shall also be pneumatic-tired.

1.6.4 Mechanical Spreader

Mechanical spreader shall be self-propelled or attached to a propelling unit capable of moving the spreader and material truck. The device shall be steerable and shall have variable speeds forward and reverse. The spreader and propelling unit shall be carried on tracks, rubber tires, or drum-type steel rollers that will not disturb the underlying material. The spreader shall contain a hopper, an adjustable screed, and outboard bumper rolls and be designed to have a uniform, steady flow of material from the hopper. The spreader shall be capable of laying material without segregation across the full width of the lane to a uniform thickness and to a uniform loose density so that when compacted, the layer or layers shall conform to thickness and grade requirements indicated. The Contracting Officer may require a demonstration of the spreader prior to approving use in performance of the work.

1.6.5 Sprinkling Equipment

Sprinkling equipment shall consist of tank trucks, pressure distributors, or other approved equipment designed to apply controlled quantities of water uniformly over variable widths of surface.

1.6.6 Tampers

Tampers shall be of an approved mechanical type, operated by either

pneumatic pressure or internal combustion, and shall have sufficient weight and striking power to produce the compaction required.

1.6.7 Straightedge

The Contractor shall furnish and maintain at the site, in good condition, one 3.05 meterstraightedge for each bituminous paver, for use in the testing of the finished surface. Straightedge shall be made available for Government use. Straightedges shall be constructed of aluminum or other lightweight metal and shall have blades of box or box-girder cross section with flat bottom reinforced to ensure rigidity and accuracy. Straightedges shall have handles to facilitate movement on pavement.

1.7 STOCKPILING MATERIALS

Materials, including approved material available from excavation and grading, shall be stockpiled in the manner and at locations designated. Before stockpiling of material, storage sites shall be cleared, and sloped to drain. Materials obtained from different sources shall be stockpiled separately.

1.8 SAMPLING AND TESTING

1.8.1 General Requirements

Sampling and testing shall be performed by an approved commercial testing laboratory or by facilities furnished by the Contractor. No work requiring testing shall be permitted until the facilities have been inspected and approved. The first inspection will be at the expense of the Government. Cost incurred for any subsequent inspection required because of failure of the facilities to pass the first inspection will be charged to the Contractor. Tests shall be performed in sufficient numbers and at the locations and times directed to ensure that materials and compaction meet specified requirements. Copies of test results shall be furnished to the Contracting Officer within 24 hours of completion of tests.

1.8.2 Test Results

Results shall verify that materials comply with this specification. When a material source is changed, the new material shall be tested for compliance. When deficiencies are found, the initial analysis shall be repeated and the material already placed shall be retested to determine the extent of unacceptable material. All in-place unacceptable material shall be replaced or modified as directed by the Contracting Officer.

1.8.3 Sampling

Aggregate samples for laboratory tests shall be taken in accordance with ASTM D 75.

1.8.4 Sieve Analysis

Before starting work, at least one sample of material shall be tested in accordance with ASTM C 136 and ASTM D 422 on sieves conforming to ASTM E 11. After the initial test, a minimum of one analysis shall be performed for each 4000 square metersof material placed, with a minimum of three analyses for each day's run until the courses are completed.

1.8.5 Liquid Limit and Plasticity Index

One liquid limit and plasticity index shall be performed for each sieve analysis. Liquid limit and plasticity index shall be in accordance with ASTM D 4318.

1.8.6 Laboratory Density

Tests shall provide a moisture-density relationship for the aggregate. Tests shall be conducted in accordance with ASTM D 1557, Procedure C. After the initial test, a minimum of one curve shall be done per 3500 cubic meters or fraction thereof of material in place. Additional moisture-density curves shall be required if there is any change in gradation or particle shape.

1.8.7 Weight Per Cubic Meter of Slag

Weight per cubic meter of slag shall be determined in accordance with ASTM C 29.

1.8.8 Wear Tests

Wear tests shall be performed in accordance with ASTM C 131. A minimum of one test per aggregate source shall be run.

PART 2 PRODUCTS

2.1 MATERIALS

2.1.1 Aggregates

Aggregates shall consist of crushed stone or slag, crushed gravel, angular sand, or other approved material. Aggregates shall be durable and sound, free from lumps of clay, organic matter, objectionable coatings, and other foreign material. Material retained on a 4.75 mm sieve shall be known as coarse aggregate and that passing the 4.75 mmsieve shall be known as binder material.

2.1.1.1 Coarse Aggregate

Only one type of coarse aggregate shall be used on the project. Coarse aggregates, consisting of angular fragments of uniform density and quality, shall have a percentage of wear not to exceed 50 percent after 500 revolutions when tested in accordance with ASTM C 131. The amount of flat and elongated particles shall not exceed 30 percent when tested in accordance with ASTM D 4791. A flat particle is one having a ratio of width to thickness greater than 3, and an elongated particle is one having a ratio of length to width greater than 3. In addition, coarse aggregate shall conform to the requirements below:

a. Crushed Gravel: Crushed gravel shall be manufactured from gravel particles 50 percent of which by weight are retained on the maximum size gradation sieve specified.

b. Crushed Stone: Crushed stone retained on each sieve specified shall contain at least 50 percent by weight of crushed pieces having two or more freshly fractured faces with the area of each face being at least equal to 75 percent of the smallest midsectional area of the piece. When two fractures are adjacent, the angle between the planes of the fractures must be at least 30

degrees to count as two fractured faces.

2.1.1.2 Slag

Slag shall be an air-cooled blast-furnace product having a dry unit weight of not less than 1045 kg/cubic meter.

2.1.2 Binder Material

Binder material shall consist of screenings, angular sand, or other finely divided mineral matter processed or naturally combined with the coarse aggregate. Liquid-limit and plasticity-index requirements shall apply to any component that is blended to meet the required gradation and shall also apply to the completed course. The portion of any component or of the completed course passing the 0.425 mm sieve shall be either nonplastic or have a liquid limit not greater than 25 and a plasticity index not greater than 5.

2.1.3 Gradation

2.1.3.1 DGA Base Course

Requirements for gradation specified shall apply to the completed base course. The aggregates shall have a 50 millimeter maximum size and shall be continuously graded within the following limits:

Sieve Designation	Percentage by Weight Passing Square-mesh Sieve (a) (b) (c)		
	No. 1	No. 2	No. 3
50 mm	100	---	100
37.5 mm	70-100	100	95-100
25 mm	45-80	60-100	---
19 mm	---	---	70-92
12.5 mm	30-60	30-65	---
9.5 mm	---	---	50-70
4.75 mm	20-50	20-50	35-55
2 mm	15-40	15-40	---
0.6 mm	---	---	12-25
0.425 mm	5-25	5-25	---
0.075 mm	0-10	0-10	0-8

NOTES FOR DENSE GRADED AGGREGATE (DGA) BASE COURSE

(a) Gradation No. 3 corresponds to the gradation for Graded Aggregate Base in Table 901A of Section 901-Aggregates of the Maryland DOT Specification, except as modified herein.

(b) Particles having diameters less than 0.02 mmshall not be in excess of 3 percent by weight of the total sample tested.

(c) The values are based on aggregates of uniform specific gravity, and the percentages passing the various sieves are subject to appropriate correction in accordance with ASTM C 127 and ASTM C 128

when aggregates of varying specific gravities are used.

PART 3 EXECUTION

3.1 GENERAL REQUIREMENTS

When the base is constructed in more than one layer, the previously constructed layer shall be cleaned of loose and foreign matter by sweeping with power sweepers or power brooms, except that hand brooms may be used in areas where power cleaning is not practicable. Adequate drainage shall be provided during the entire period of construction to prevent water from collecting or standing on the working area. Line and grade stakes shall be provided as necessary for control. Grade stakes shall be in lines parallel to the centerline of the area under construction and suitably spaced for string lining.

3.2 OPERATION OF AGGREGATE SOURCES

Aggregates shall be obtained from off-site sources. Relatively large amounts of DGA Base Course materials will be required from off-site sources at the expense and responsibility of the contractor. Therefore, to eliminate damage to Ernie Pyle Street and 10th Street from loadings due to the dump trucks, all dump trucks shall enter and leave the construction site from the north end of the site via Chisolm Avenue at Mapes Road (reference contract drawings).

3.3 PREPARATION OF UNDERLYING COURSE

3.3.1 General Requirements

Before constructing aggregate base courses, the previously constructed underlying course shall be cleaned of foreign substances. Surface of underlying course shall meet the specified compaction and surface tolerances. Subgrade shall conform to Section 02300 SITE GRADING AND EARTHWORK FOR ROADWAYS. Base course shall conform to the requirements of this section. Ruts or soft, yielding spots that may appear in the underlying course, areas having inadequate compaction, and deviations of the surface from requirements specified shall be corrected. For cohesionless underlying materials containing sands, sand gravels, or any other cohesionless material in harmful quantities, the surface shall be mechanically stabilized with aggregate prior to placement of the base course. Stabilization may be accomplished by mixing base course material into the underlying course and compacting by approved methods. Properly compacted material will be considered as part of the underlying course and shall meet all requirements for the underlying course. Finished underlying course shall not be disturbed by traffic or other operations and shall be maintained in a satisfactory condition until base course is placed.

3.3.2 Grade Control

Underlying subgrade material shall be excavated to sufficient depth for the required base course thickness so that the finished base course with the subsequent surface course will meet the fixed grade. Finished and completed base course areas shall conform to the lines, grades, cross section, and dimensions indicated.

3.4 INSTALLATION

3.4.1 Mixing and Placing

Materials shall be mixed by the stationary plant, traveling plant, or road mix method and placed in such a manner as to obtain uniformity of the aggregate base course material and at a uniform optimum water content for compaction. The Contractor shall make such adjustments in mixing or placing procedures or in equipment to obtain the true grades, to minimize segregation and degradation, to reduce or accelerate loss or increase of water, and to ensure a satisfactory base course.

3.4.2 Edges of Base Course

Approved material shall be placed along edges of aggregate base course in such quantities as will compact to thickness of the course being constructed, or to the thickness of each layer in a multiple layer course, allowing in each operation at least a 300 mm width of the shoulder to be rolled and compacted simultaneously with rolling and compacting of each layer of base course.

3.4.3 Compaction

Each layer of aggregate base course including shoulders shall be compacted. Water content shall be maintained at optimum. Density of compacted mixture shall be at least 100 percent of laboratory maximum density. Rolling shall begin at the outside edge of the surface and proceed to the center, overlapping on successive trips at least one-half the width of the roller. Alternate trips of the roller shall be slightly different lengths. Speed of the roller shall be such that displacement of the aggregate does not occur. Areas inaccessible to the rollers shall be compacted with mechanical tampers, and shall be shaped and finished by hand methods.

3.4.4 Layer Thickness

Compacted thickness of the aggregate course shall be as indicated No layer shall be in excess of 200 mm nor less than 75 mm in compacted thickness.

3.4.5 Finishing

The surface of the top layer shall be finished to grade and cross section shown. Finished surface shall be of uniform texture. Light blading during compaction may be necessary for the finished surface to conform to the lines, grades, and cross sections. Should the surface for any reason become rough, corrugated, uneven in texture, or traffic marked prior to completion, such unsatisfactory portion shall be scarified, reworked, recompacted, or replaced as directed.

3.4.5.1 Smoothness

Surface of each layer shall show no deviations in excess of 9.5 mm when tested with the 3.05 meter straightedge. Deviations exceeding this amount shall be corrected by removing material and replacing with new material, or by reworking existing material and compacting, as directed.

3.4.5.2 Thickness Control

Compacted thickness of the base course shall be within 12.7 mm of the thickness indicated. Where the measured thickness is more than 12.7 mm deficient, such areas shall be corrected by scarifying, adding new material of proper gradation, reblading, and recompacting as directed. Where the measured thickness is more than 12.7 mm thicker than indicated, the course

shall be considered as conforming to the specified thickness requirements. Average job thickness shall be the average of all thickness measurements taken for the job, but shall be within 7 mm of the thickness indicated.

3.5 FIELD QUALITY CONTROL

3.5.1 Field Density

Field in-place density shall be determined in accordance with ASTM D 1556 or ASTM D 2922. When ASTM D 2922 is used, the calibration curves shall be checked, and adjusted if necessary, using the sand cone method as described in paragraph Calibration of the ASTM publication. ASTM D 2922 results in a wet unit weight of soil, and when using this method, ASTM D 3017 shall be used to determine the moisture content of the soil. The calibration curves furnished with the moisture gauges shall be checked along with density calibration checks as described in ASTM D 3017. If ASTM D 2922 is used, in-place densities shall be checked by ASTM D 1556 at least once per lift for each 4000 square meter of base material. Calibration curves and calibration test results shall be furnished within 24 hours of the conclusion of the tests. At least one field density test shall be performed for each 800 square meters of each layer of base material.

3.5.2 Smoothness

Measurements for deviation from grade and cross section shown shall be taken in successive positions parallel to the road centerline with a 3 meter straightedge. Measurements shall also be taken perpendicular to the road centerline at 15 meter intervals or fraction thereof.

3.5.3 Thickness

Thickness of the base course shall be measured at intervals in such a manner as to ensure one measurement for each 600 square meters of base course. Measurements shall be made in 75 mm diameter test holes penetrating the base course.

3.5.4 Deficiencies

3.5.4.1 Grade and Thickness

Deficiencies in grade and thickness shall be corrected such that both grade and thickness tolerances are met. The depth of required excavation shall be controlled to keep the final surface elevation within grade requirements and to preserve layer thicknesses of materials.

3.5.4.2 Density

Density shall be considered deficient if the field dry density test results are below 100 percent of the target dry density. If the densities are deficient, then the layer shall be rolled with two additional passes of the specified roller. If the dry density is still deficient, then work will be stopped until the cause of the low dry densities can be determined by the Contracting Officer.

3.5.4.3 Smoothness

Deficiencies in smoothness shall be corrected as if they are deficiencies in grade or thickness. All tolerances for grade and thickness must be maintained while correcting smoothness deficiencies.

3.6 TRAFFIC

Completed portions of the area may be opened to traffic, provided there is no marring or distorting of the surface by the traffic. Heavy equipment shall not be permitted except when necessary to construction, and then the area shall be protected against marring or damage to the completed work.

3.7 MAINTENANCE

The aggregate base course shall be maintained in a satisfactory condition until accepted. Maintenance shall include immediate repairs to any defects and shall be repeated as often as necessary to keep the area intact. The DGA base course shall be maintained in a usable condition throughout the construction period. Ruts shall not be graded out and shall be filled with additional DGA base material mixed with the existing base and recompacted.

3.8 DISPOSAL OF UNSATISFACTORY MATERIALS

Removed in-place materials that are unsuitable for the base course material that is removed for the required correction of defective areas, and waste material and debris shall be disposed of as specified in paragraph SPOIL AREAS of SECTION 02300 SITE GRADING AND EARTHWORK FOR ROADWAYS.

-- End of Section --

SECTION 02730

SANITARY SEWERS

PART 1 GENERAL

1.1 REFERENCES

The publications listed below form a part of this specification to the extent referenced. The publications are referred to in the text by basic designation only.

AMERICAN SOCIETY FOR TESTING AND MATERIALS (ASTM)

ASTM A 123	(1989a) Zinc (Hot-Dip Galvanized) Coatings on Iron and Steel Products
ASTM C 33	(1993) Concrete Aggregates
ASTM C 150	(1995) Portland Cement
ASTM C 270	(1995a) Mortar for Unit Masonry
ASTM C 425	(1995) Compression Joints for Vitrified Clay Pipe and Fittings
ASTM C 478	(1994) Precast Reinforced Concrete Manhole Sections
ASTM C 700	(1995) Vitrified Clay Pipe, Extra Strength, Standard Strength, and Perforated
ASTM C 828	(1990) Low-Pressure Air Test of Vitrified Clay Pipe Lines
ASTM C 924	(1989) Concrete Pipe Sewer Lines by Low-Pressure Air Test Method
ASTM C 972	(1982; R 1990) Test Method for Compression-Recovery of Tape Sealant
ASTM D 412	(1992) Vulcanized Rubber and Thermoplastic Rubbers and Thermoplastic Elastomers - Tension
ASTM D 624	(1991) Tear Strength of Conventional Vulcanized Rubber and Thermoplastic Elastomers
ASTM D 2680	(1995)Acrylonitrile-Butadiene-Styrene (ABS) and Poly(Vinyl Chloride) (PVC) Composite Sewer Piping
ASTM D 2751	(1993) Acrylonitrile-Butadiene-Styrene (ABS) Sewer Pipe and Fittings

ASTM D 3034	(1994) Type PSM Poly(Vinyl Chloride) (PVC) Sewer Pipe and Fittings
ASTM D 3212	(1992) Joints for Drain and Sewer Plastic Pipes Using Flexible Elastomeric Seals
ASTM F 402	(1993) Safe Handling of Solvent Cements, Primers, and Cleaners Used for Joining Thermoplastic Pipe and Fittings

AMERICAN WATER WORKS ASSOCIATION (AWWA)

AWWA C110	(1993) Ductile-Iron and Gray-Iron Fittings, 3 In. Through 48 In. (75 mm through 1200 mm), for Water and Other Liquids
AWWA C111	(1990) Rubber-Gasket Joints for Ductile-Iron Pressure Pipe and Fittings
AWWA C151	(1991) Ductile-Iron Pipe, Centrifugally Cast, for Water or Other Liquids

NATIONAL FIRE PROTECTION ASSOCIATION (NFPA)

NFPA 49	(1994) Hazardous Chemicals Data
NFPA 325M	(1991) Fire Hazard Properties of Flammable Liquids, Gases, and Volatile Solids
NFPA 704	(1990) Identification of the Fire Hazards of Materials

UNI-BELL PVC PIPE ASSOCIATION (UBPPA)

UBPPA UNI-B-6	(1990) Recommended Practice for the Low-Pressure Air Testing of Installed Sewer Pipe

1.2 GENERAL REQUIREMENTS

The construction required herein shall include appurtenant structures and building sewers to points of connection with the building drains 1.5 m outside the building to which the sewer system is to be connected. The Contractor shall replace damaged material and redo unacceptable work at no additional cost to the Government. Excavation and backfilling is specified in Section 02316 EXCAVATION, TRENCHING, AND BACKFILLING FOR UTILITIES SYSTEMS. Backfilling shall be accomplished after inspection by the Contracting Officer. Before, during, and after installation, plastic pipe and fittings shall be protected from any environment that would result in damage or deterioration to the material. The Contractor shall have a copy of the manufacturer's instructions available at the construction site at all times and shall follow these instructions unless directed otherwise by the Contracting Officer. Solvents, solvent compounds, lubricants, elastomeric gaskets, and any similar materials required to install the plastic pipe shall be stored in accordance with the manufacturer's recommendation and shall be discarded if the storage period exceeds the recommended shelf life. Solvents in use shall be discarded when the recommended pot life is exceeded.

1.3 SUBMITTALS

Government approval is required for submittals with a "GA" designation; submittals having an "FIO" designation are for information only. The following shall be submitted in accordance with Section 01330 SUBMITTAL PROCEDURES:

SD-13 Certificates

Portland Cement; FIO;AR.

Certificates of compliance stating the type of cement used in manufacture of concrete pipe, fittings and precast manholes.

PART 2 PRODUCTS

2.1 PIPE

Pipe shall conform to the respective specifications and other requirements specified below.

2.1.1 Plastic Pipe

Acrylonitrile-butadiene-styrene (ABS) and polyvinyl chloride (PVC) composite sewer piping shall conform to ASTM D 2680. Size 200 mm (8 inch) through 380 mm (15 inch) diameter.

2.1.1.1 ABS Pipe

ASTM D 2751.

2.1.1.2 PVC Pipe

ASTM D 3034, Type PSM with a maximum SDR of 35, Size 380 mm (15 inch) or less in diameter. The pipe stiffness shall be greater than or equal to 735/D for cohesionless material pipe trench backfills.

2.1.2 Ductile Iron Pipe

Pipe shall conform to AWWA C151 unless otherwise shown or specified.

2.1.3 Clay Pipe

ASTM C 700 Extra strength.

2.2 FITTINGS

Fittings shall be compatible with the pipe supplied and shall have a strength not less than that of the pipe. Fittings shall conform to the respective specifications and other requirements specified below.

2.2.1 Plastic Pipe

ABS and PVC composite sewer pipe fittings shall conform to ASTM D 2680.

2.2.1.1 ABS Pipe

ASTM D 2751.

2.2.1.2 PVC Pipe

ASTM D 3034 for type PSM pipe.

2.2.2 Ductile Iron Pipe

Mechanical fittings shall conform to AWWA C110, rated for 1.03 MPa (150 psi). Push-on fittings shall conform to AWWA C110and AWWA C111, rated for 10.3 MPa (150 psi).

2.2.3 Clay Pipe

ASTM C 700 Extra strength.

2.3 JOINTS

Joints installation shall comply with the manufacturer's instructions.

2.3.1 Plastic Pipe

Flexible plastic pipe (PVC) gasketed joints shall conform to ASTM D 3212.

2.3.1.1 ABS Pipe

ASTM D 2751, solvent weld or bell and spigot O-ring joint, size 300 mm (12 inches) or less in diameter, dimensions and tolerances in accordance with Table 2 therein.

2.3.2 Ductile Iron Pipe

Push-on joints shall conform to AWWA C111. Mechanical joints shall conform to AWWA C111 as modified by AWWA C151.

2.3.3 Clay Pipe

Compression joints shall conform to ASTM C 425.

2.4 FRAMES AND COVERS

Frames and covers shall be cast iron or ductile iron. Cast iron frames and covers shall be as indicated or shall be of type as suitable for the application, circular, without vent holes. The frames and covers shall have a combined weight of not less than 181.4 kg (400 pounds). The letter "S" shall be stamped or cast into covers so that it is plainly visible.

2.5 STEEL LADDER

A steel ladder shall be provided where the depth of a manhole exceeds 3.6 m (12 feet). The ladder shall not be less than 406.4 mm (16 inches) in width, with 19.1 mm (3/4 inch) diameter rungs spaced 304.8 mm (12 inches) apart. The two stringers shall be a minimum 9.5 mm (3/8 inch) thick and 50.8 mm (2 inch) wide. Ladders and inserts shall be galvanized after fabrication in conformance with ASTM A 123.

2.6 CEMENT MORTAR

Cement mortar shall conform to ASTM C 270, Type M with Type II cement.

2.6.1 Portland Cement

Portland cement shall conform to ASTM C 150, Type II for concrete used in manholes and type optional with the Contractor for cement used in concrete cradle, concrete encasement, and thrust blocking. Where aggregates are alkali reactive, as determined by Appendix XI of ASTM C 33, a cement containing less than 0.60 percent alkalies shall be used.

2.7 STRUCTURES

2.7.1 Precast Reinforced Concrete Manhole Sections

Precast reinforced concrete manhole sections shall conform to ASTM C 478, except that portland cement shall be as specified herein. Joints shall be cement mortar, an approved mastic, rubber gaskets, a combination of these types; or the use of external preformed rubber joint seals and extruded rolls of rubber with mastic adhesive on one side.

PART 3 EXECUTION

3.1 INSTALLATION

3.1.1 Adjacent Facilities

3.1.1.1 Water Lines

Where the location of the sewer is not clearly defined by dimensions on the drawings, the sewer shall not be closer horizontally than 3 m to a water-supply main or service line, except that where the bottom of the water pipe will be at least 300 mm above the top of the sewer pipe, the horizontal spacing may be a minimum of 2 m. Where gravity-flow sewers cross above water lines, the sewer pipe for a distance of 3 m on each side of the crossing shall be fully encased in concrete or shall be acceptable pressure pipe with no joint closer horizontally than 1 m to the crossing. The thickness of the concrete encasement including that at the pipe joints shall be not less than 100 mm.

3.1.2 Pipe Laying

a. Pipe shall be protected during handling against impact shocks and free fall and the pipe interior shall be free of extraneous material.

b. Pipe laying shall proceed upgrade with the spigot ends of bell-and-spigot pipe and tongue ends of tongue-and-groove pipe pointing in the direction of the flow. Each pipe shall be laid accurately to the line and grade shown on the drawings. Pipe shall be laid and centered so that the sewer has a uniform invert. As the work progresses, the interior of the sewer shall be cleared of all superfluous materials.

c. Before making pipe joints all surfaces of the portions of the pipe to be joined shall be clean and dry. Lubricants, primers, and adhesives shall be used as recommended by the pipe manufacturer. The joints shall then be placed, fitted, joined, and adjusted to obtain the degree of water tightness required.

d. ABS composite pipe ends with exposed truss and filler material shall be coated with solvent weld material before making the joint

to prevent water or air passage at the joint between the inner and outer wall of the pipe.

e. Installations of solvent weld joint pipe, using ABS or PVC pipe and fittings shall be in accordance with ASTM F 402. All required precautions shall be taken to assure adequate trench ventilation and protection for workers installing the pipe.

3.1.2.1 Trenches

Trenches shall be kept free of water and as dry as possible during bedding, laying, and jointing and for as long a period as required. When work is not in progress, open ends of pipe and fittings shall be satisfactorily closed so that no trench water or other material will enter the pipe or fittings.

3.1.2.2 Backfill

As soon as possible after the joint is made, sufficient backfill material shall be placed along the pipe to prevent pipe movement off line or grade. Plastic pipe shall be completely covered to prevent damage from ultraviolet light.

3.1.2.3 Width of Trench

If the maximum width of the trench at the top of the pipe, as specified in Section 02316 EXCAVATION, TRENCHING, AND BACKFILLING FOR UTILITIES SYSTEMS, is exceeded for any reason other than by direction, the Contractor shall install at no additional cost to the Government such concrete cradling, pipe encasement, or other bedding required to support the added load of the backfill.

3.1.2.4 Joints

Joints between different pipe materials shall be made as specified, using approved jointing materials.

3.1.2.5 Handling and Storage

Pipe, fittings and joint material shall be handled and stored in accordance with the manufacturer's recommendations. Storage facilities for plastic pipe, fittings, joint materials and solvents shall be classified and marked in accordance with NFPA 704, with classification as indicated in NFPA 49 and NFPA 325M.

3.1.3 Leakage Tests

Lines shall be tested for leakage by low pressure air testing, infiltration tests or exfiltration tests, as appropriate. Low pressure air testing for vitrified clay pipes shall be as prescribed in ASTM C 828. Low pressure air testing for PVC pipe shall be as prescribed in UBPPA UNI-B-6. Low pressure air testing procedures for other pipe materials shall use the pressures and testing times prescribed in ASTM C 828 and ASTM C 924, after consultation with the pipe manufacturer. Prior to infiltration or exfiltration tests the trench shall be backfilled up to at least the lower half of the pipe. If required, sufficient additional backfill shall be placed to prevent pipe movement during testing, leaving the joints uncovered to permit inspection. Visible leaks encountered shall be corrected regardless of leakage test results. When the water table is 600

mm or more above the top of the pipe at the upper end of the pipeline section to be tested, infiltration shall be measured using a suitable weir or other device acceptable to the Contracting Officer. When the Contracting Officer determines that infiltration cannot be properly tested, an exfiltration test shall be made by filling the line to be tested with water so that a head of at least 600 mm is provided above both the water table and the top of the pipe at the upper end of the pipeline to be tested. The filled line shall be allowed to stand until the pipe has reached its maximum absorption, but not less than 4 hours. After absorption, the head shall be re-established. The amount of water required to maintain this water level during a 2-hour test period shall be measured. Leakage as measured by either the infiltration test or exfiltration test shall not exceed 600 liters per 10 mm diameter per kilometer of pipeline per day. When leakage exceeds the maximum amount specified, satisfactory correction shall be made and retesting accomplished. Testing, correction, and retesting shall be made at no additional cost to the Government.

3.1.4 Test for Deflection

When flexible pipe is used, a deflection test shall be made on the entire length of the installed pipeline not less than 30 days after the completion of all work including the leakage test, backfill, and placement of any fill, grading, paving, concrete, or superimposed loads. Deflection shall be determined by use of a deflection device or by use of a spherical, spheroidal, or elliptical ball, a cylinder, or circular sections fused to a common shaft. The ball, cylinder, or circular sections shall have a diameter, or minor diameter as applicable, of 92.5 percent of the inside diameter of the pipe. A tolerance of plus 0.5 percent will be permitted. The ball, cylinder, or circular sections shall be of a homogeneous material throughout, shall have a density greater than 1.0 as related to water at 4.0 degrees C (39.2 degrees F), and shall have a surface brinell hardness of not less than 150. It shall be center bored and through bolted with a 6.4 mm (1/4 inch) minimum diameter steel shaft having a yield strength of 480 MPa (70,000 psi) or more, with eyes at each end for attaching pulling cables. The eye shall be suitably backed with flange or heavy washer such that a pull exerted on the opposite end of the shaft shall produce compression throughout the remote end of the ball, cylinder or circular section. Circular sections shall be so spaced that the distance from the external faces of the front and back sections shall equal or exceed the diameter of the circular section. Failure of the ball, cylinder, or circular section to pass freely through a pipe run, either by being pulled through or by being flushed through with water, shall be cause for rejection of that run. When a deflection device is used for the test in lieu of the ball, cylinder, or circular sections described, such device shall be approved prior to use. The device shall be sensitive to 1.0 percent of the diameter of the pipe being measured and shall be accurate to 1.0 percent of the indicated dimension. Installed pipe showing deflections greater than 7.5 percent of the normal diameter of the pipe shall be retested by a run from the opposite direction. If the retest also fails, the suspect pipe shall be replaced at no cost to the Government.

3.2 MANHOLES

3.2.1 General

Manholes shall be constructed of concrete, or precast concrete manhole sections. The invert channels shall be smooth and semicircular in shape conforming to the inside of the adjacent sewer section. Changes in direction of flow shall be made with a smooth curve of as large a radius as

the size of the manhole will permit. Changes in size and grade of the channels shall be made gradually and evenly. The invert channels shall be formed directly in the concrete of the manhole base, or shall be built up with brick and mortar, or shall be half tile laid in concrete, or shall be constructed by laying full section sewer pipe through the manhole and breaking out the top half after the surrounding concrete has hardened. Pipe connections shall be made to manhole using water stops, standard O-ring joints, special manhole coupling, or shall be made in accordance with the manufacturer's recommendation. The Contractor's proposed method of connection, list of materials selected, and specials required, shall be approved prior to installation. The floor of the manhole outside the channels shall be smooth and shall slope toward the channels not less than 100 mm per meter nor more than 200 mm per meter. Free drop inside the manholes shall not exceed 500 mm, measured from the invert of the inlet pipe to the top of the floor of the manhole outside the channels, and drop manholes shall be constructed whenever the free drop would otherwise be greater than 500 mm.

3.2.2 Steel Ladder

Ladder shall be adequately anchored to the wall by means of steel inserts spaced not more than 1850 mm apart vertically, and shall be installed to provide at least 150 mm of space between the wall and the rungs. The wall along the line of the ladder shall be vertical for its entire length.

3.2.3 Jointing, Plastering and Sealing

Mortar joints shall be completely filled and shall be smooth and free from surplus mortar on the inside of the manhole. Mortar and mastic joints between precast rings shall be full-bedded in jointing compound and shall be smoothed to a uniform surface on both the interior and exterior of the manhole. Installation of rubber gasket joints between precast rings shall be in accordance with the recommendations of the manufacturer. Precast rings may also be sealed by the use of extruded rolls of rubber with mastic adhesive on one side.

3.2.4 Frames and Covers

Unless otherwise indicated, tops of frames and covers shall be set flush with finished grade in paved areas or 50 mm higher than finished grade in unpaved areas. Frame and cover assemblies shall be sealed to manhole sections using external preformed rubber joint seals that meet the requirements of ASTM D 412 and ASTM D 624, or other methods specified in paragraph Jointing, Plastering and Sealing, unless otherwise specified.

3.2.5 External Preformed Rubber Joint Seals

External preformed rubber joint seals and extruded rolls of rubber with mastic adhesive shall meet the requirements of ASTM D 412 and ASTM C 972 to ensure conformance with paragraph Leakage Tests. The seal shall be multi-section with neoprene rubber top section and all lower sections made of Ethylene Propylene Di Monomer (EPDM) rubber with a minimum thickness of 1.5 mm. Each unit shall consist of a top and a bottom section and shall have mastic on the bottom of the bottom section and mastic on the top and bottom of the top section. The mastic shall be non-hardening butyl rubber sealant and shall seal to the cone/top slab of the manhole/catch basin and over the lip of the casting. One unit shall seal a casting and up to six, 50 mm adjusting rings. The bottom section will be 305 mm in height. A 152 mm high top section will cover up to two, 50 mm adjusting rings. A 305

mm high bottom section will cover up to six, 50 mm adjusting rings. Extension sections shall cover up to two more adjusting rings. Each extension shall overlap the bottom section by 50 mm and shall be overlapped by the top section by 50 mm.

3.3 CONNECTIONS TO EXISTING MANHOLES

Pipe connections to existing manholes shall be made in such manner that the finish work will conform as nearly as practicable to the essential applicable requirements specified for new manholes, including all necessary concrete work, cutting, and shaping. The connection shall be centered on the manhole. Holes for the new pipe shall be of sufficient diameter to allow packing cement mortar around the entire periphery of the pipe but no larger than 1-1/2 times the diameter of the pipe. Cutting the manhole shall be done in a manner that will cause the least damage to the walls.

3.4 BUILDING CONNECTIONS

Building connections shall include the lines to and connection with the building waste drainage piping at a point approximately 1.5 m outside the building, unless otherwise indicated. Where building drain piping is not installed, the Contractor shall terminate the building connections approximately 1.5 m from the site of the building at a point and in a manner designated.

3.5 CLEANOUTS AND OTHER APPURTENANCES

Cleanouts and other appurtenances shall be installed where shown on the drawings or as directed by the Contracting Officer, and shall conform to the detail of the drawings.

-- End of Section --

SECTION 02770

CONCRETE SIDEWALKS AND CURBS AND GUTTERS

PART 1 GENERAL

1.1 REFERENCES

The publications listed below form a part of this specification to the extent referenced. The publications are referred to in the text by basic designation only and represent the latest edition in force when this contract is awarded.

AMERICAN ASSOCIATION OF STATE HIGHWAY AND TRANSPORTATION OFFICIALS (AASHTO)

AASHTO M 182	Burlap Cloth Made from Jute or Kenaf

AMERICAN SOCIETY FOR TESTING AND MATERIALS (ASTM)

ASTM A 185	Steel Welded Wire Fabric, Plain, for Concrete Reinforcement
ASTM A 615/A 615M	Deformed and Plain Billet-Steel Bars for Concrete Reinforcement
ASTM A 616/A 616M	Rail-Steel Deformed and Plain Bars for Concrete Reinforcement
ASTM A 617/A 617M	Axle-Steel Deformed and Plain Bars for Concrete Reinforcement
ASTM C 31/C 31M	Making and Curing Concrete Test Specimens in the Field
ASTM C 143	Slump of Hydraulic Cement Concrete
ASTM C 171	Sheet Materials for Curing Concrete
ASTM C 172	Sampling Freshly Mixed Concrete
ASTM C 173	Air Content of Freshly Mixed Concrete by the Volumetric Method
ASTM C 231	Air Content of Freshly Mixed Concrete by the Pressure Method
ASTM C 309	Liquid Membrane-Forming Compounds for Curing Concrete
ASTM D 1751	Preformed Expansion Joint Filler for Concrete Paving and Structural Construction (Nonextruding and Resilient Bituminous Types)

ASTM D 1752	Preformed Sponge Rubber and Cork Expansion Joint Fillers for Concrete Paving and Structural Construction
ASTM D 3405	Joint Sealants, Hot-Applied, for Concrete and Asphalt Pavements

CORPS OF ENGINEERS (COE)

COE CRD-C 527	Standard Specification for Joint Sealants, Cold-Applied, Non-Jet-Fuel-Resistant, for Rigid and Flexible Pavements

1.2 SUBMITTALS

Government approval is required for submittals with a "GA" designation; submittals having an "FIO" designation are for information only. The following shall be submitted in accordance with Section 01330 SUBMITTAL PROCEDURES:

SD-08 Statements

Mixture Proportions; GA|ED.

The results of trial mixture design studies along with a statement giving the maximum nominal coarse aggregate size and the proportions of ingredients that will be used in the manufacture of each strength or class of concrete, at least 14 days prior to commencing concrete placing operations. Aggregate weights shall be based on the saturated surface dry condition. The statement shall be accompanied by test results performed within 6 months of concrete placement from an approved independent commercial testing laboratory, showing that mixture design studies have been made with materials proposed for the project and that the proportions selected will produce concrete of the qualities indicated. No substitutions shall be made in the materials used in the mixture design studies without additional tests to show that the quality of the concrete is satisfactory.

SD-09 Reports

Field Quality Control; FIO; AR.

Copies of all test reports within 24 hours of completion of the test.

SD-14 Samples

Surface Retarder; GA|ED.

Surface retarder material with manufacturer's instructions for application.

SD-18 Records

Concrete; FIO; AR.

Copies of certified delivery tickets for all concrete used in the construction.

1.3 WEATHER LIMITATIONS

1.3.1 Placing During Cold Weather

Concrete placement shall be discontinued when the air temperature reaches 5 degrees C and is falling. Placement may begin when the air temperature reaches 2 degrees C and is rising. Provisions shall be made to protect the concrete from freezing during the specified curing period. If necessary to place concrete when the temperature of the air, aggregates, or water is below 2 degrees C, placement shall be approved in writing. Approval will be contingent upon full conformance with the following provisions. The underlying material shall be prepared and protected so that it is entirely free of frost when the concrete is deposited. Mixing water and aggregates shall be heated as necessary to result in the temperature of the in-place concrete being between 10 and 30 degrees C. Methods and equipment for heating shall be approved. The aggregates shall be free of ice, snow, and frozen lumps before entering the mixer. Covering and other means shall be provided for maintaining the concrete at a temperature of at least 10 degrees C for not less than 72 hours after placing, and at a temperature above freezing for the remainder of the curing period.

1.3.2 Placing During Warm Weather

The temperature of the concrete as placed shall not exceed 30 degrees C except where an approved retarder is used. The mixing water and/or aggregates shall be cooled, if necessary, to maintain a satisfactory placing temperature. The placing temperature shall not exceed 35 degrees C.

1.4 PLANT, EQUIPMENT, MACHINES, AND TOOLS

1.4.1 General Requirements

Plant, equipment, machines, and tools used in the work shall be subject to approval and shall be maintained in a satisfactory working condition at all times. The equipment shall have the capability of producing the required product, meeting grade controls, thickness control and smoothness requirements as specified. Use of the equipment shall be discontinued if it produces unsatisfactory results. The Contracting Officer shall have access at all times to the plant and equipment to ensure proper operation and compliance with specifications.

1.4.2 Slip Form Equipment

Slip form paver or curb forming machine, will be approved based on trial use on the job and shall be self-propelled, automatically controlled, crawler mounted, and capable of spreading, consolidating, and shaping the plastic concrete to the desired cross section in 1 pass.

1.5 FIELD TEST SIDEWALK PANELS

A sidewalk panel at least 1220 mm by 1525 mm and 100 mm thick shall be constructed to demostrate exposed aggregate slab finish. Panels shall be located outside the limits of completed sidewalk. Each panel shall have a full length joint line. Field test panel shall be constructed prior to beginning of work using the materials and procedures proposed for use on the job, to demonstrate the results to be attained. The quality and appearance of each panel shall be subject to the approval of the Contracting Officier, and, if not judged satisfactory, additional panels shall be constructed until approval is attained. Formed or finished

surfaces in the completed sidewalk shall match the quality and appearance of the approved field example.

PART 2 PRODUCTS

2.1 CONCRETE

Concrete shall conform to the applicable requirements of Section 03300 CAST-IN-PLACE STRUCTURAL CONCRETE except as otherwise specified. Concrete shall have a minimum compressive strength of 24 MPa at 28 days except as otherwise specified. Maximum size of aggregate shall be 37.5 mm. See Architectural Sheet A-48 of the contract drawings for color and texture requirements.

2.1.1 CHEMICAL ADMIXTURES

Chemical admixtures, when required or permitted, shall conform to the appropriate specification listed. Admixtures shall be furnished in liquid form and of suitable concentration for easy, accurate control of dispensing.

2.1.1.1 Air-Entraining Admixture

ASTM C 260 and shall consistently entrain the air content in the specified ranges under field conditions.

2.1.1.2 Surface Retarding Admixture

ASTM C 494, Type B except that the 6-month and 1-year compressive and flexural strength tests are waived.

2.1.2 Air Content

Mixtures shall have air content by volume of concrete of 5 to 7 percent, based on measurements made immediately after discharge from the mixer.

2.1.3 Slump

The concrete slump shall be 50 millimeters plus or minus 25 millimeters for hand placed concrete and 25 mm plus or minus 10 mm for slipformed concretewhere determined in accordance with ASTM C 143.

2.1.4 Reinforcement Steel

Reinforcement bars shall conform to ASTM A 615/A 615M, ASTM A 616/A 616M, or ASTM A 617/A 617M. Wire mesh reinforcement shall conform to ASTM A 185.

2.2 CONCRETE CURING MATERIALS

2.2.1 Impervious Sheet Materials

Impervious sheet materials shall conform to ASTM C 171, type optional, except that polyethylene film, if used, shall be white opaque.

2.2.2 Burlap

Burlap shall conform to AASHTO M 182.

2.2.3 White Pigmented Membrane-Forming Curing Compound

White pigmented membrane-forming curing compound shall conform to ASTM C 309, Type 2.

2.3 CONCRETE PROTECTION MATERIALS

Concrete protection materials shall be a linseed oil mixture of equal parts, by volume, of linseed oil and either mineral spirits, naphtha, or turpentine. At the option of the contractor, commercially prepared linseed oil mixtures, formulated specifically for application to concrete to provide protection against the action of deicing chemicals may be used, except that emulsified mixtures are not acceptable.

2.4 JOINT FILLER STRIPS

2.4.1 Contraction Joint Filler for Curb and Gutter

Contraction joint filler for curb and gutter shall consist of hard-pressed fiberboard.

2.4.2 Expansion Joint Filler, Premolded

Expansion joint filler, premolded, shall conform to ASTM D 1751 or ASTM D 1752, 9.5 mm thick, unless otherwise indicated.

2.5 JOINT SEALANTS

2.5.1 Joint Sealant, Cold-Applied

Joint sealant, cold-applied shall conform to COE CRD-C 527.

2.5.2 Joint Sealant, Hot-Poured

Joint sealant, hot-poured shall conform to ASTM D 3405.

2.6 FORM WORK

Form work shall be designed and constructed to ensure that the finished concrete will conform accurately to the indicated dimensions, lines, and elevations, and within the tolerances specified. Forms shall be of wood or steel, straight, of sufficient strength to resist springing during depositing and consolidating concrete. Wood forms shall be surfaced plank, 50 mm nominal thickness, straight and free from warp, twist, loose knots, splits or other defects. Wood forms shall have a nominal length of 3 m. Radius bends may be formed with 19 mm boards, laminated to the required thickness. Steel forms shall be channel-formed sections with a flat top surface and with welded braces at each end and at not less than two intermediate points. Ends of steel forms shall be interlocking and self-aligning. Steel forms shall include flexible forms for radius forming, corner forms, form spreaders, and fillers. Steel forms shall have a nominal length of 3 m with a minimum of 2 welded stake pockets per form. Stake pins shall be solid steel rods with chamfered heads and pointed tips designed for use with steel forms.

2.6.1 Sidewalk Forms

Sidewalk forms shall be of a height equal to the full depth of the finished sidewalk.

2.6.2 Curb and Gutter Forms

Curb and gutter outside forms shall have a height equal to the full depth of the curb or gutter. The inside form of curb shall have batter as indicated and shall be securely fastened to and supported by the outside form. Rigid forms shall be provided for curb returns, except that benders or thin plank forms may be used for curb or curb returns with a radius of 3 m or more, where grade changes occur in the return, or where the central angle is such that a rigid form with a central angle of 90 degrees cannot be used. Back forms for curb returns may be made of 38 mm benders, for the full height of the curb, cleated together.

2.7 Porous Fill

Porous Fill shall consist of crushed stone, slag, gravel (crushed or uncrushed), sand or other approved materials. Maximum particle size shall be 25 mm with not more than 20 percent passing the 4.75 mm sieve.

PART 3 EXECUTION

3.1 SUBGRADE PREPARATION

The subgrade shall be constructed to the specified grade and cross section prior to concrete placement. Subgrade shall be placed and compacted in conformance with Section 02221 Excavation, Filling and Backfilling for Buildings.

3.1.1 Sidewalk Porous Fill

The porous fill shall be tested for grade and cross section with a template extending the full width of the sidewalk and supported between side forms. Porous fill shall be compacted in lifts not exceeding 100 mm in thickness. Porous fill shall be compacted with a minimum of two passes of a hand-operated plate-type vibratory compactor.

3.1.2 Curb and Gutter Subgrade

The subgrade shall be tested for grade and cross section by means of a template extending the full width of the curb and gutter. The subgrade shall be of materials equal in bearing quality to the subgrade under the adjacent pavement.

3.1.3 Maintenance of Subgrade and Porous Fill

The subgrade and porous fill shall be maintained in a smooth, compacted condition in conformity with the required section and established grade until the concrete is placed. The subgrade, and porous fill, as applicable shall be in a moist condition when concrete is placed. The subgrade and porous fill shall be prepared and protected to produce a subgrade free from frost when the concrete is deposited.

3.2 FORM SETTING

Forms shall be set to the indicated alignment, grade and dimensions. Forms shall be held rigidly in place by a minimum of 3 stakes per form placed at intervals not to exceed 1.2 meters. Corners, deep sections, and radius bends shall have additional stakes and braces, as required. Clamps, spreaders, and braces shall be used where required to ensure rigidity in the forms. Forms shall be removed without injuring the concrete. Bars or

heavy tools shall not be used against the concrete in removing the forms. Any concrete found defective after form removal shall be promptly and satisfactorily repaired. Forms shall be cleaned and coated with form oil each time before concrete is placed. Wood forms may, instead, be thoroughly wetted with water before concrete is placed, except that with probable freezing temperatures, oiling is mandatory.

3.2.1 Sidewalks

Forms for sidewalks shall be set with the upper edge true to line and grade with an allowable tolerance of 3 mm in any 3 m long section. After forms are set, grade and alignment shall be checked with a 3.05 m straightedge. Forms shall have a transverse slope as indicated with the low side adjacent to the roadway. Side forms shall not be removed for 12 hours after finishing has been completed.

3.2.2 Curbs and Gutters

The forms of the front of the curb shall be removed not less than 2 hours nor more than 6 hours after the concrete has been placed. Forms back of curb shall remain in place until the face and top of the curb have been finished, as specified for concrete finishing. Gutter forms shall not be removed while the concrete is sufficiently plastic to slump in any direction.

3.3 SIDEWALK CONCRETE PLACEMENT AND FINISHING

3.3.1 Formed Sidewalks

Concrete shall be placed in the forms in one layer. When consolidated and finished, the sidewalks shall be of the thickness indicated. After concrete has been placed in the forms, a strike-off guided by side forms shall be used to bring the surface to proper section to be compacted. The concrete shall be consolidated with an approved vibrator, and the surface shall be finished to grade as specified hereinafter.

3.3.2 Concrete Exposed Aggregate Finishing

The concrete sidewalk finish is to be an exposed aggregate surface finish. The exposed aggregate surface finish shall be in accordance with ACI 302.1R, Paragragh 7.13.3. Color, shape and uniform-sized gravel or crushed aggregate shall be as specified. Flat or sliver-shaped particles, or particles smaller than 19 mm are not permitted. Immediately following screening and bull floating of the surface, the approved aggregate shall be scattered by hand and evenly distributed so that the entire surface is completely covered. The aggregate then must be throughly embedded into the surface. As soon as practical, the surface must then be floated using a magnesium float or darby until all aggregate is entirely embedded and mortar completely surrounds and slightly covers all of it, leaving no holes in the surface. Shortly after floating, a surface retarder may be sprayed or brushed over the surface, following the manufacture's recommendations. Exposing operations shall begin as soon as the surface can be brushed and hosed without overexposing or dislodging the aggregate. A scored surface shall be produced by brooming with a fiber-bristle brush in a direction transverse to that of the traffic.If possible, finishers should stay off the surface to minimize breaking of aggregate bond. The surface shall be finished free of waves, irregularities, or tool marks. Due to the exposed aggregate, tooling of the joints may not be practical. Therefore, sawing the joints is recommended.

3.3.3 Edge and Joint Finishing

All slab edges, including those at formed joints, shall be finished with an edger having a radius of 3 mm. Transverse joint shall be edged before brooming, and the brooming shall eliminate the flat surface left by the surface face of the edger. Corners and edges which have crumbled and areas which lack sufficient mortar for proper finishing shall be cleaned and filled solidly with a properly proportioned mortar mixture and then finished.

3.3.4 Surface and Thickness Tolerances

Finished surfaces shall not vary more than 7.9 mm from the testing edge of a 3.05 m straightedge. Permissible deficiency in section thickness will be up to 6.4 mm.

3.4 CURB AND GUTTER CONCRETE PLACEMENT AND FINISHING

3.4.1 Formed Curb and Gutter

Concrete shall be placed to the section required in a single lift. Consolidation shall be achieved by using approved mechanical vibrators. Curve shaped gutters shall be finished with a standard curb "mule".

3.4.2 Curb and Gutter Finishing

Approved slipformed curb and gutter machines may be used in lieu of hand placement.

3.4.3 Concrete Finishing

Exposed surfaces shall be floated and finished with a smooth wood float until true to grade and section and uniform in texture. Floated surfaces shall then be brushed with a fine-hair brush with longitudinal strokes. The edges of the gutter and top of the curb shall be rounded with an edging tool to a radius of 13 mm. Immediately after removing the front curb form, the face of the curb shall be rubbed with a wood or concrete rubbing block and water until blemishes, form marks, and tool marks have been removed. The front curb surface, while still wet, shall be brushed in the same manner as the gutter and curb top. The top surface of gutter and entrance shall be finished to grade with a wood float.

3.4.4 Joint Finishing

Curb edges at formed joints shall be finished as indicated.

3.4.5 Surface and Thickness Tolerances

Finished surfaces shall not vary more than 6.4 mm from the testing edge of a 3.05 m straightedge. Permissible deficiency in section thickness will be up to 6.4 mm.

3.5 SIDEWALK JOINTS

Sidewalk joints shall be constructed to divide the surface into rectangular areas. Transverse contraction joints shall be spaced at a distance equal to the sidewalk width or 1.5 m on centers, whichever is less, and shall be continuous across the slab. Longitudinal contraction joints shall be

constructed along the centerline of all sidewalks 3 m or more in width. Transverse expansion joints shall be installed at sidewalk returns and opposite expansion joints in adjoining curbs. Where the sidewalk is not in contact with the curb, transverse expansion joints shall be installed as indicated. Expansion joints shall be formed about structures and features which project through or into the sidewalk pavement, using joint filler of the type, thickness, and width indicated.

3.5.1 Sidewalk Contraction Joints

The contraction joints shall be formed in the fresh concrete by cutting a groove in the top portion of the slab to a depth of at least one-fourth of the sidewalk slab thickness, using a jointer to cut the groove, or by sawing a groove in the hardened concrete with a power-driven saw, unless otherwise approved. Sawed joints shall be constructed by sawing a groove in the concrete with a 3 mm blade to the depth indicated. An ample supply of saw blades shall be available on the job before concrete placement is started, and at least one standby sawing unit in good working order shall be available at the jobsite at all times during the sawing operations.

3.5.2 Sidewalk Expansion Joints

Expansion joints shall be formed with 9.5 mm joint filler strips. Joint filler shall be placed with top edge 6 mm below the surface and shall be held in place with steel pins or other devices to prevent warping of the filler during floating and finishing. Immediately after finishing operations are completed, joint edges shall be rounded with an edging tool having a radius of 3 mm, and concrete over the joint filler shall be removed. At the end of the curing period, expansion joints shall be cleaned and filled with joint sealer. The joint opening shall be thoroughly cleaned before the sealing material is placed. Sealing material shall not be spilled on exposed surfaces of the concrete. Concrete at the joint shall be surface dry and atmospheric and concrete temperatures shall be above 10 degrees C at the time of application of joint sealing material. Excess material on exposed surfaces of the concrete shall be removed immediately and concrete surfaces cleaned.

3.5.3 Reinforcement Steel Placement

Reinforcement steel shall be accurately and securely fastened in place with suitable supports and ties before the concrete is placed.

3.6 CURB AND GUTTER JOINTS

Curb and gutter joints shall be constructed at right angles to the line of curb and gutter.

3.6.1 Contraction Joints

Contraction joints shall be constructed directly opposite contraction joints in abutting portland cement concrete pavements and spaced so that monolithic sections between curb returns will not be less than 1.5 m nor greater than 4.5 m in length. Contraction joints shall be constructed by means of 3 mm thick separators and of a section conforming to the cross section of the curb and gutter. Separators shall be removed as soon as practicable after concrete has set sufficiently to preserve the width and shape of the joint and prior to finishing.

3.6.2 Expansion Joints

Expansion joints shall be formed by means of preformed expansion joint filler material cut and shaped to the cross section of curb and gutter. Expansion joints shall be provided in curb and gutter directly opposite expansion joints of abutting portland cement concrete pavement, and shall be of the same type and thickness as joints in the pavement. Where curb and gutter do not abut portland cement concrete pavement, expansion joints at least 9.5 mm in width shall be provided at intervals not less than 10 meters or greater than 35 meters. Expansion joints shall be sealed immediately following curing of the concrete or as soon thereafter as weather conditions permit. Expansion joints and the top 1 inch depth of curb and gutter contraction-joints shall be sealed with joint sealer. The joint opening shall be thoroughly cleaned before the sealing material is placed. Sealing material shall not be spilled on exposed surfaces of the concrete. Concrete at the joint shall be surface dry and atmospheric and concrete temperatures shall be above 10 degrees C at the time of application of joint sealing material. Excess material on exposed surfaces of the concrete shall be removed immediately and concrete surfaces cleaned.

3.7 CURING AND PROTECTION

3.7.1 General Requirements

Concrete shall be protected against loss of moisture and rapid temperature changes for at least 7 days from the beginning of the curing operation. Unhardened concrete shall be protected from rain and flowing water. All equipment needed for adequate curing and protection of the concrete shall be on hand and ready for use before actual concrete placement begins. Protection shall be provided as necessary to prevent cracking of the pavement due to temperature changes during the curing period.

3.7.1.1 Mat Method

The entire exposed surface shall be covered with 2 or more layers of burlap. Mats shall overlap each other at least 150 mm. The mat shall be thoroughly wetted with water prior to placing on concrete surface and shall be kept continuously in a saturated condition and in intimate contact with concrete for not less than 7 days.

3.7.1.2 Impervious Sheeting Method

The entire exposed surface shall be wetted with a fine spray of water and then covered with impervious sheeting material. Sheets shall be laid directly on the concrete surface with the light-colored side up and overlapped 300 mm when a continuous sheet is not used. The curing medium shall not be less than 450 mm wider than the concrete surface to be cured, and shall be securely weighted down by heavy wood planks, or a bank of moist earth placed along edges and laps in the sheets. Sheets shall be satisfactorily repaired or replaced if torn or otherwise damaged during curing. The curing medium shall remain on the concrete surface to be cured for not less than 7 days.

3.7.1.3 Membrane Curing Method

A uniform coating of white-pigmented membrane-curing compound shall be applied to the entire exposed surface of the concrete as soon after finishing as the free water has disappeared from the finished surface. Formed surfaces shall be coated immediately after the forms are removed and in no case longer than 1 hour after the removal of forms. Concrete shall

not be allowed to dry before the application of the membrane. If any drying has occurred, the surface of the concrete shall be moistened with a fine spray of water and the curing compound applied as soon as the free water disappears. Curing compound shall be applied in two coats by hand-operated pressure sprayers at a coverage of approximately 5 square meters per liter (200 square feet per gallon) for both coats. The second coat shall be applied in a direction approximately at right angles to the direction of application of the first coat. The compound shall form a uniform, continuous, coherent film that will not check, crack, or peel and shall be free from pinholes or other imperfections. If pinholes, abrasion, or other discontinuities exist, an additional coat shall be applied to the affected areas within 30 minutes. Concrete surfaces that are subjected to heavy rainfall within 3 hours after the curing compound has been applied shall be resprayed by the method and at the coverage specified above. Areas where the curing compound is damaged by subsequent construction operations within the curing period shall be resprayed. Necessary precautions shall be taken to insure that the concrete is properly cured at sawed joints, and that no curing compound enters the joints. The top of the joint opening and the joint groove at exposed edges shall be tightly sealed before the concrete in the region of the joint is resprayed with curing compound. The method used for sealing the joint groove shall prevent loss of moisture from the joint during the entire specified curing period. Approved standby facilities for curing concrete pavement shall be provided at a location accessible to the jobsite for use in the event of mechanical failure of the spraying equipment or other conditions that might prevent correct application of the membrane-curing compound at the proper time. Concrete surfaces to which membrane-curing compounds have been applied shall be adequately protected during the entire curing period from pedestrian and vehicular traffic, except as required for joint-sawing operations and surface tests, and from any other possible damage to the continuity of the membrane. Any membrane curing agent must be removed at the end of the curing period if a protective coating is to be applied.

3.7.2 Backfilling

After curing, debris shall be removed and the area adjoining the concrete shall be backfilled, graded, and compacted to conform to the surrounding area in accordance with lines and grades indicated.

3.7.3 Protection

Completed concrete shall be protected from damage until accepted. The Contractor shall repair damaged concrete and clean concrete discolored during construction. Concrete that is damaged shall be removed and reconstructed for the entire length between regularly scheduled joints. Refinishing the damaged portion will not be acceptable. Removed damaged portions shall be disposed of as directed.

3.7.4 Protective Coating

If it is anticipated that concrete will be exposed to temperatures below 5 degrees C within 9 weeks after placement, a protective coating of linseed oil mixture shall be applied to the exposed-to-view concrete surface.

3.7.4.1 Application

Curing and backfilling operation shall be completed prior to applying protective coating. Concrete shall be surface dry and clean before each application. Coverage shall be not more than 11 square meters per liter

(50 square yards per gallon) for first application and not more than 15.5 square meters per liter (70 square yards per gallon) for second application, except that the number of applications and coverage for each application for commercially prepared mixture shall be in accordance with the manufacturer's instructions. Coated surfaces shall be protected from vehicular and pedestrian traffic until dry.

3.7.4.2 Precautions

Protective coating shall not be heated by direct application of flame or electrical heaters and shall be protected from exposure to open flame, sparks, and fire adjacent to open containers or applicators. Material shall not be applied at temperatures lower than 10 degrees C.

3.8 FIELD QUALITY CONTROL

3.8.1 General Requirements

The Contractor shall perform the inspection and tests described and meet the specified requirements for inspection details and frequency of testing. Based upon the results of these inspections and tests, the Contractor shall take the action and submit reports as required below, and any additional tests to insure that the requirements of these specifications are met.

3.8.2 Concrete Testing

3.8.2.1 Strength Testing

The Contractor shall provide molded concrete specimens for strength tests. Samples of concrete placed each day shall be taken not less than once a day nor less than once for every 40 cubic meters of concrete. The samples for strength tests shall be taken in accordance with ASTM C 172. Cylinders for acceptance shall be molded in conformance with ASTM C 31/C 31M by an approved testing laboratory. Each strength test result shall be the average of 2 test cylinders from the same concrete sample tested at 28 days, unless otherwise specified or approved. Concrete specified on the basis of compressive strength will be considered satisfactory if the averages of all sets of three consecutive strength test results equal or exceed the specified strength, and no individual strength test result falls below the specified strength by more than 4 MPa.

3.8.2.2 Air Content

Air content shall be determined in accordance with ASTM C 173 or ASTM C 231. ASTM C 231 shall be used with concretes and mortars made with relatively dense natural aggregates. Air content tests shall be made on each truckload of concrete or batch of concrete mixed on site. If results are out of tolerance, the placing foreman shall be notified and he shall take appropriate action to have the air content corrected at the plant.

3.8.2.3 Slump Test

One slump test shall be made on each truckload of concrete or batch of concrete mixed on site.

3.8.3 Thickness Evaluation

The anticipated thickness of the concrete shall be determined prior to

placement by passing a template through the formed section or by measuring the depth of opening of the extrusion template of the curb forming machine. If a slip form paver is used for sidewalk placement, the subgrade shall be true to grade prior to concrete placement and the thickness will be determined by measuring each edge of the completed slab.

3.8.4 Surface Evaluation

The finished surface of each category of the completed work shall be uniform in color and free of blemishes and form or tool marks.

3.9 SURFACE DEFICIENCIES AND CORRECTIONS

3.9.1 Thickness Deficiency

When measurements indicate that the completed concrete section is deficient in thickness by more than 6 mm the deficient section will be removed, between regularly scheduled joints, and replaced.

3.9.2 High Areas

In areas not meeting surface smoothness and plan grade requirements, high areas shall be reduced either by rubbing the freshly finished concrete with carborundum brick and water when the concrete is less than 36 hours old or by grinding the hardened concrete with an approved surface grinding machine after the concrete is 36 hours old or more. The area corrected by grinding the surface of the hardened concrete shall not exceed 5 percent of the area of any integral slab, and the depth of grinding shall not exceed 6 mm. Pavement areas requiring grade or surface smoothness corrections in excess of the limits specified above shall be removed and replaced.

3.9.3 Appearance

Exposed surfaces of the finished work will be inspected by the Government and any deficiencies in appearance will be identified. Areas which exhibit excessive cracking, discoloration, form marks, or tool marks or which are otherwise inconsistent with the overall appearances of the work shall be removed and replaced.

-- End of Section --

SECTION 02935

TURF

PART 1 GENERAL

1.1 REFERENCES

The publications listed below form a part of this specification to the extent referenced. The publications are referred to in the text by basic designation only.

AGRICULTURAL MARKETING SERVICE (AMS)

AMS-01	(Amended thru: Aug 1988) Federal Seed Act Regulations (Part 201-202)

COMMERCIAL ITEM DESCRIPTIONS (CID)

CID A-A-1909	(Basic; Notice 1) Fertilizer

1.2 SUBMITTALS

Government approval is required for submittals with a "GA" designation; submittals having an "FIO" designation are for information only. The following shall be submitted in accordance with Section 01330 SUBMITTAL PROCEDURES:

SD-01 Data

Manufacturer's Literature; FIO;AR.

Manufacturer's literature discussing physical characteristics, application and installation instructions for erosion control material, and for chemical treatment material.

SD-07 Schedules

Equipment List; FIO;AR.

A list of proposed seeding and mulching equipment to be used in performance of turfing operation, including descriptive data and calibration tests.

SD-08 Statements

Delivery; GA|ED.

Delivery schedule, at least 10 days prior to the intended date of the first delivery.

Maintenance Report; FIO;AR.

Written record of maintenance work performed.

Turf Establishment Period; FIO;AR.

Written calendar time period for the turf establishment period. When there is more than one turf establishment period, the boundaries of the turfed area covered for each period shall be described.

SD-13 Certificates

Certificates of compliance certifying that materials meet the requirements specified, prior to the delivery of materials. Certified copies of the reports for the following materials shall be included:

Seed; GA|ED.

For mixture, percent pure live seed, minimum percent germination and hard seed, maximum percent weed seed content, date tested and state certification.

Sod; GA|ED.

For species, mixture percentage, percent purity, field location.

Fertilizer; GA|ED.

For chemical analysis, composition percent.

Delivered Topsoil; GA|ED.

For nutrient levels, pH, texture, organic matter percentage, bulk density and recommended sulfur and fertilizer rates.

1.3 SOURCE INSPECTIONS

Sod material will be subject to inspection by the Contracting Officer at the growing site.

1.4 DELIVERY, INSPECTION, STORAGE, AND HANDLING

1.4.1 Delivery

1.4.1.1 Protection

Sod shall be protected from drying out and contamination during delivery.

1.4.1.2 Topsoil

A soil test shall be provided for delivered topsoil.

1.4.1.3 Soil Amendments

Soil amendments shall be delivered to the site in the original, unopened containers bearing the manufacturer's chemical analysis. In lieu of containers, soil amendments may be furnished in bulk. A chemical analysis shall be provided for bulk deliveries.

1.4.2 Inspection

Seed and sod shall be inspected upon arrival at the job site by the Contracting Officer for conformity to type and quality in accordance with paragraph MATERIALS. Other materials shall be inspected for meeting specified requirements and unacceptable materials shall be removed from the

job site.

1.4.3 Storage

Materials shall be stored in areas designated by the Contracting Officer. Sod shall be lightly sprinkled with water, covered with moist burlap, straw, or other covering and protected from exposure to wind and direct sunlight until planted. Covering for sod shall allow air to circulate and prevent internal heat from building up. Seed, and fertilizer shall be stored in cool, dry locations away from contaminants. Chemical treatment materials shall not be stored with other landscape materials.

1.4.4 Handling

1.4.4.1 Materials

Care shall be taken to avoid injury to sod. Except for bulk deliveries, materials shall not be dropped or dumped from vehicles.

1.4.4.2 Time Limitation

a. Sod: Limitation of the time between harvesting and placing of sod shall be 36 hours.

PART 2 PRODUCTS

2.1 MATERIALS

2.1.1 Topsoil

The existing topsoil shall be stripped and stockpiled on site. When required beyond that available from stripping, the topsoil shall be obtained from off-site sources and delivered to the site. The contractor shall test the delivered topsoil for nutrient levels, pH, texture, organic matter percentage, bulk density and recommended sulfur and fertilizer rates. The delivered topsoil shall be amended in accordance with the soil test results to establish the quantities and types of soil amendments required. The delivered topsoil shall be naturally occurring sandy loam with a minimum organic content of 2%. The pH for grass establishment shall be between 6 and 6.5.

2.1.2 Seed

2.1.2.1 Seed Classification

State-approved seed of the latest season's crop shall be provided in original sealed packages bearing the producer's guaranteed analysis for percentages of mixture, purity, germination, hard seed, weed seed content, and inert material. Labels shall be in conformance with AMS-01 and applicable state seed laws.

2.1.2.2 Seed Mixtures

Seed mixtures shall be proportioned by weight as follows:

Botanical Name	Common Name	Rate	Percent Pure Live Seed
Festuca arundinacea	Tall Fescue (improved variety from latest MD Agronomy Mimeo)	342 kg/hec	83% min.
Lolium perenne	Perenial Rye	245 kg/hec	83% min.

2.1.2.3 Quality

Weed seed shall not exceed 1 percent by weight of the total mixture. Noxious weed seed shall be zero percent. Wet, moldy, or otherwise damaged seed shall be rejected.

2.1.2.4 Temporary Seed

The temporary seed for erosion control shall be as follows:

Common Name

Winter Rye (grain)
(during summer - Winter Rye plus Foxtail Millet)

2.1.2.5 Seed Mixing

The field mixing of seed shall be performed on site in the presence of the Contracting Officer.

2.1.3 Sod

2.1.3.1 Sod Classification

State-approved sod shall be provided as classified by applicable state laws. Each individual sod section shall be of a size to permit rolling and lifting without breaking.

2.1.3.2 Grass Species

Grass species shall be 100% proportioned as follows:

Botanical Name	Common Name
Festuca arundinacea	Tall Fescue (improved variety from latest MD Agronomy Mimeo)

2.1.3.3 Quality

The sod shall be relatively free of thatch, diseases, nematodes, soil-borne insects, weeds or undesirable plants, stones larger than 50 mm in any dimension, woody plant roots and other material detrimental to a healthy stand of turf. Sod that has become dry, moldy, or yellow from heating, or has irregularly shaped pieces of sod and torn or uneven ends shall be rejected.

2.1.3.4 Thickness

Sod shall be machine cut to a uniform thickness of 30 mm within a tolerance of 5 mm, excluding top growth and thatch. Measurement for thickness shall exclude top growth and thatch.

2.1.3.5 Anchors

Sod anchors shall be as recommended by the sod supplier.

2.1.4 Soil Amendments

Soil amendments shall consist of fertilizer, organic soil amendments and soil conditioners meeting the following requirements.

2.1.4.1 Fertilizer

Fertilizer shall be commercial grade, free flowing, uniform in composition and conforming to CID A-A-1909. Granular Fertilizer: Consists of nitrogen-phosphorus-potassium ratio: 10 percent nitrogen, 6 percent phosphorus, and 4 percent potassium.

2.1.4.2 Organic Soil Amendments

a. Composted Manure: Well composted, cattle manure containing a maximum 25 percent by volume of straw, sawdust, or other bedding materials, free of stones, sticks, soil and containing no chemicals or ingredients harmful to plants. It shall be laid for one year.

b. Compost: Comercially available sewage sludge and/or grass and leaf compost applied in accordance with the manufacturers instructions.

Particle Size: Minimum percent by weight passing:

Sieve Size	Percent
No. 4	95
No. 4	80

Nitrogen Content: Minimum percent based on dry weight:

Material	Percent
Sawdust	0.5
Pine Bark	1.0

2.1.4.3 Soil Conditioner

Soil conditioner shall be for single use or in combination to meet requirements for topsoil. Gypsum shall be commercially packaged, free flowing, minimum 95 percent calcium sulfate by volume.

2.1.5 Mulch

Mulch shall be free from weeds, mold, and other deleterious materials.

2.1.5.1 Straw

Straw shall be bright stalks from oats, wheat, rye, barley, or rice furnished in air-dry condition and with a consistency for placing with commercial mulch-blowing equipment.

2.1.5.2 Hay

Hay shall be native hay, sudan-grass hay, broomsedge hay, or other herbaceous mowings furnished in an air-dry condition suitable for placing with commercial mulch-blowing equipment.

2.1.5.3 Wood Cellulose Fiber

Wood cellulose fiber shall not contain any growth or germination-inhibiting factors and shall contain tackifier and be dyed an appropriate color to facilitate visual metering during application and contain tackifier or surfactant as required. Composition on air-dry weight basis: 9 to 15 percent moisture, pH range from 4.5 to 6.0.

2.1.5.4 Wood Chips

Wood chips shall be chips or shredded bark with maximum particle size of 5 mm.

2.1.5.5 Paper Fiber Mulch

Paper fiber mulch shall be recycled news print that is shredded for the purpose of mulching seed and contain tackifier.

2.1.5.6 Surfactant

Surfactants shall not be used in open flat, windy areas.

2.1.6 Water

Water shall not contain elements toxic to plant life.

2.1.7 Erosion Control Material

Soil erosion control shall conform to the following:

2.1.7.1 Soil Erosion Control Blanket

Machine produced mat of wood excelsior formed from a web of interlocking wood fibers, covered on one side with either knitted straw blanket-like mat construction, covered with biodegradable plastic mesh, or interwoven biodegradable thread, plastic netting or twisted kraft paper cord netting.

2.1.7.2 Soil Erosion Control Net

Heavy, twisted jute mesh weighing approximately 605 grams per meter and 1200 mm wide with mesh openings of approximately 25 mm.

2.1.7.3 Hydrophilic Colloids

Hydrophilic colloids shall be physiologically harmless to plant and animal life, without phytotoxic agents. Colloids shall be naturally occurring, silicate powder based, and shall form a water insoluble membrane after

curing. Colloids must resist mold growth.

2.1.7.4 Anchors

Erosion control anchor material shall be as recommended by the manufacturer.

PART 3 EXECUTION

3.1 SEEDING AND SODDING TIMES AND CONDITIONS

3.1.1 Seeding Time

Seed shall be sown from March 1 to May 30 for spring and from Sept 1 to Nov 1 for fall planting.

3.1.2 Sodding Time

Sod shall be placed when the ground is not frozen, excessively wet or dry.

3.1.3 Turfing Conditions

Turf operations shall be performed only during periods when beneficial results can be obtained. When drought, excessive moisture or other unsatisfactory conditions prevail, the work shall be stopped when directed. When special conditions warrant a variance to the turf operations, proposed times shall be submitted to and approved by the Contracting Officer.

3.2 SITE PREPARATION

3.2.1 Placing Topsoil

On areas to receive topsoil, the compacted subgrade soil shall be scarified to a 50 mm depth for bonding of topsoil with subsoil. Topsoil then shall be spread evenly to a thickness of 12.7 mm and graded to the elevations and slopes shown. Topsoil shall not be spread when frozen or excessively wet or dry.

3.2.2 Application of On-Site Topsoil Soil Amendments

(Application of Off-Site Topsoil shall be in accordance with soil test results.)

3.2.2.1 Fertilizer

Fertilizer shall be applied at the rate 540 kilograms per hectare . Fertilizer shall be incorporated into the soil to a minimum depth of 100 mm and may be incorporated as part of the tillage or hydroseeding operation.

3.2.2.2 Soil Conditioner

Soil Conditioner shall be spread uniformly over the soil to a minimum depth of 50 millimeters and thoroughly incorporated by tillage into the soil to a minimum depth of 100 mm.

3.2.3 Tillage

3.2.3.1 Minimum Depth

Soil on slopes gentler than 3-horizontal-to-1-vertical shall be tilled to a minimum depth of 100 mm. On slopes between 3-horizontal-to-1-vertical and 1-horizontal-to-1 vertical, the soil shall be tilled to a minimum depth of 50 mm by scarifying with heavy rakes, or other method. Rototillers shall be used where soil conditions and length of slope permit. On slopes 1-horizontal-to-1 vertical and steeper, no tillage is required.

3.2.4 Finished Grading

3.2.4.1 Preparation

Turf areas shall be filled as needed or have surplus soil removed to attain the finished grade. Drainage patterns shall be maintained as indicated on drawings. Turf areas compacted by construction operations shall be completely pulverized by tillage. Soil used for repair of erosion or grade deficiencies shall conform to topsoil requirements specified in herein. Finished grade shall be 25 mm below the adjoining grade of any surfaced area. New surfaces shall be blended to existing areas.

3.2.4.2 Lawn Area Debris

Lawn areas shall have debris and stones larger than 25 mm in any dimension removed from the surface.

3.2.4.3 Protection

Finished graded areas shall be protected from damage by vehicular or pedestrian traffic and erosion.

3.3 SEEDING

3.3.1 General

Prior to seeding, any previously prepared seedbed areas compacted or damaged by interim rain, traffic or other cause, shall be reworked to restore the ground condition previously specified. Seeding operations shall not take place when the wind velocity will prevent uniform seed distribution.

3.3.2 Equipment Calibration

The equipment to be used and the methods of turfing shall be subject to the inspection and approval of the Contracting Officer prior to commencement of turfing operations. Immediately prior to the commencement of turfing operations, the Contractor shall conduct turfing equipment calibration tests in the presence of the Contracting Officer.

3.3.3 Applying Seed

3.3.3.1 Broadcast Seeding

Seed shall be uniformly broadcast at the rate shown in paragraph 2.1.2.2 kilograms per hectare using broadcast seeders. Half of seed shall be broadcast in one direction, and the remainder at right angles to the first direction. Seed shall be covered to an average depth of 5 mm by disk harrow, steel mat drag, cultipacker, or other approved device.

3.3.3.2 Drill Seeding

Seed shall be uniformly drilled to an average depth of 15 mm and at the rate shown in paragraph 2.1.2.2kilograms per hectare using equipment having drills not more than 160 mm apart. Row markers shall be used with the drill seeder.

3.3.3.3 Rolling

Immediately after seeding, except for slopes 3-horizontal-to-1 vertical and greater, the entire area shall be firmed with a roller not exceeding 130 kg for each meter of roller width. Areas seeded with seed drills equipped with rollers shall not be rolled.

3.3.4 Hydroseeding

Seed and fertilizer shall be added to water and thoroughly mixed at the rates specified. Wood cellulose fiber mulch shall be added at the rates recommended by the manufacturer after the seed, fertilizer and water have been thoroughly mixed, to produce a homogeneous slurry. Slurry shall be uniformly applied under pressure over the entire area. The hydroseeded area shall not be rolled.

3.3.5 Mulch

3.3.5.1 Straw or Hay Mulch

Straw or hay mulch shall be spread uniformly at the rate of 4.5 metric tons per hectare. Mulch shall be spread by hand, blower-type mulch spreader or other approved method. Mulching shall be started on the windward side of relatively flat areas or on the upper part of a steep slope and continued uniformly until the area is covered. The mulch shall not be bunched. All seeded areas shall be mulched on the same day as the seeding.

3.3.5.2 Mechanically Anchoring

Immediately following spreading, the mulch shall be anchored to the soil by a V-type-wheel land packer, a scalloped-disk land packer designed to force mulch into the soil surface, or other suitable equipment.

3.3.5.3 Non-Asphaltic Tackifier

Hydrophilic colloid shall be applied at rate recommended by manufacturer. Apply with hydraulic equipment suitable for mixing and applying uniform mixture of tackifier.

3.3.5.4 Wood Cellulose Fiber

Wood cellulose fiber mulch for use with the hydraulic application of seed and fertilizer shall be applied as part of the hydroseeding operation.

3.3.6 Water

Watering shall be started within 2 days after completing the seeded area. Water shall be applied at a rate sufficient to ensure moist soil conditions to a minimum depth of 25 mm. Run-off and puddling shall be prevented.

3.4 SODDING

3.4.1 General

Areas shall be sodded as indicated. Adequate soil moisture shall be ensured prior to sodding by spraying water on the area to be sodded and wetting the soil to a minimum depth of 25 mm.

3.4.2 Placing Sod

Rows of sod shall be placed parallel to and tightly against each other. Joints shall be staggered laterally. The sod strips shall not be stretched or overlapped. All joints shall be butted tight. Voids and air drying of roots shall be prevented. On long slopes, sod shall be laid at right angles to slopes. In ditches, sod shall be laid at right angles to the flow of water. When required, the sod shall be anchored by placing anchors a minimum distance of 600 mm on center with a minimum of 2 anchors per sod section.

3.4.3 Finishing

Air pockets shall be eliminated and a true and even surface shall be provided by tamping or rolling the sod in place. Displacement of the sod shall be assured by knitting of sod to the soil. Frayed edges shall be trimmed and holes or missing corners shall be patched in the sod.

3.4.4 Watering Sod

Watering shall be started immediately after completing each day of sodding. Water shall be applied at a rate sufficient to ensure moist soil conditions to a minimum depth of 25 mm. Run-off and puddling shall be prevented.

3.5 EROSION CONTROL

3.5.1 Erosion Control Material

Erosion control material, where indicated or required, shall be installed in accordance with manufacturer's instructions. Placement of the erosion control material shall be accomplished without damage to installed material or without deviation to finished grade.

3.5.2 Temporary Turf Cover

3.5.2.1 General

When there are contract delays in the turfing operation or a quick cover is required to prevent erosion, the areas designated for turf shall be seeded with a temporary seed as directed by the Contracting Officer.

3.5.2.2 Application

When no other turfing materials have been applied, the quantity of one half of the required soil amendments shall be applied and the area tilled in accordance with paragraph SITE PREPARATION. Seed shall be uniformly broadcast and applied at the rate of 157 kilograms per square hectare. The area shall be watered as required.

3.6 RESTORATION AND CLEAN UP

3.6.1 Restoration

Existing turf areas, pavements and facilities that have been damaged from the turfing operation shall be restored to original condition at

Contractor's expense.

3.6.2 Clean Up

Excess and waste material shall be removed from the planting operation and shall be disposed of off the site. Adjacent paved areas shall be cleaned.

3.7 PROTECTION OF TURFED AREAS

Immediately after turfing, the area shall be protected against traffic or other use by erecting barricades and providing signage as required, or as directed by the Contracting Officer.

3.8 TURF ESTABLISHMENT PERIOD

3.8.1 Commencement

The Turf Establishment Period for establishing a healthy stand of turf shall begin on the first day of work under this contract and shall end three (3) months after the last day of turfing operations required by this contract. Written calendar time period shall be furnished to the Contracting Officer for the Turf Establishment Period. When there is more than one turf establishment period, describe the boundaries of the turfed area covered for each period.

3.8.2 Satisfactory Stand of Turf

3.8.2.1 Seeded Area

a. Lawn Area: A satisfactory stand of turf from the seeding operation for a lawn area is defined as a minimum of 1076 grass plants per square meter. Bare spots shall be no larger than 5807 mm square. The total bare spots shall not exceed 2 percent of the total seeded area.

3.8.2.2 Sodded Area

A satisfactory stand of turf from the sodding operation is defined as living sod uniform in color and leaf texture. Bare spots shall be no larger than 5807 mm square.

3.8.3 Maintenance During Establishment Period

3.8.3.1 General

Maintenance of the turfed areas shall include eradicating weeds, eradicating insects and diseases, protecting embankments and ditches from erosion, maintaining erosion control materials and mulch, protecting turfed areas from traffic, mowing, and watering.

3.8.3.2 Mowing

a. Lawn Areas: Lawn areas shall be mowed to a minimum height of 100 milimeters when the average height of the turf becomes 150 millimeters. Clippings shall be removed when the amount of cut turf is heavy enough to damage the turfed areas.

3.8.3.3 Watering

Watering shall be at intervals to obtain a moist soil condition to a minimum depth of 25 mm. Frequency of watering and quantity of water shall be adjusted in accordance with the growth of the turf. Run-off, puddling and wilting shall be prevented.

3.8.3.4 Repair

The Contractor shall re-establish as specified herein, eroded, damaged or barren areas. Mulch shall also be repaired or replaced as required.

3.8.3.5 Maintenance Report

A written record shall be furnished to the Contracting Officer of the maintenance work performed.

3.9 FINAL ACCEPTANCE

3.9.1 Preliminary Inspection

Prior to the completion of the Turf Establishment Period, a preliminary inspection shall be held by the Contracting Officer. Time for the inspection shall be established in writing. The acceptability of the turf in accordance with the Turf Establishment Period shall be determined. An unacceptable stand of turf shall be repaired as soon as turfing conditions permit.

3.9.2 Final Inspection

A final inspection shall be held by the Contracting Officer to determine that deficiencies noted in the preliminary inspection have been corrected. Time for the inspection shall be established in writing.

-- End of Section --

SECTION 02950

TREES, SHRUBS, GROUND COVERS, AND VINES

PART 1 GENERAL

1.1 REFERENCES

The publications listed below form a part of this specification to the extent referenced. The publications are referred to in the text by basic designation only.

AMERICAN ASSOCIATION OF NURSERYMEN (AAN)

AAN-01 (1990) American Standard for Nursery Stock

COMMERCIAL ITEM DESCRIPTIONS (CID)

CID A-A-1909 (Basic; Notice 1) Fertilizer

1.2 SUBMITTALS

Government approval is required for submittals with a "GA" designation; submittals having an "FIO" designation are for information only. The following shall be submitted in accordance with Section 01330 SUBMITTAL PROCEDURES:

SD-01 Data

Edging Material; FIO;AR. Erosion Control Material; FIO;AR.

Manufacturer's literature discussing physical characteristics, application and installation instructions for edging material and erosion control material.

SD-08 Statements

Delivery; GA|AR.

The following work plans, before work is started.

a. Delivery Schedule at least 10 days prior to the intended date of the first delivery.

SD-09 Reports

Soil Test for Delivered Topsoil; GA|ED. Percolation Test; GA|ED.

Certified reports of inspections and laboratory tests, prepared by an independent testing agency, including analysis and interpretation of test results. Each report shall be properly identified. Test methods used and compliance with recognized test standards shall be described.

SD-13 Certificates

Topsoil; GA|ED. Soil Amendments; GA|ED. Plants; GA|ED.

Certificates of compliance certifying that materials meet the requirements specified, prior to the delivery of materials. Reports for the following materials shall be included.

a. Delivered Topsoil: For nutrient levels pH, texture or organic matter percentage, bulk intensity and recommended lime/sulfur and fertilizer rates.

b. Fertilizer: For chemical analysis and composition percent.

d. Plant Materials: For botanical and common name, size, quantity by species, grade, nursery grown.

SD-18 Records

Plant Establishment Period; FIO;AR. Maintenance Report; FIO;AR. Maintenance Instructions; GA|ED.

a. Maintenance Report. Written record of maintenance work performed and quantity of plant losses and replacements.

b. Plant Establishment Period. Written calendar time period for the beginning of the plant establishment period. When there is more than one establishment period, the boundaries of the planted areas covered for each period shall be described.

c. Maintenance Instruction. Written instructions for year-round care of installed plants.

1.3 SOURCE INSPECTIONS

1.3.1 Plant Materials

Plant materials shall be subject to inspection at the growing site by the Contracting Officer.

1.3.2 Delivered Topsoil

The source of topsoil shall be subject to inspection by the Contracting Officer.

1.4 SHIPMENT, DELIVERY, INSPECTION, STORAGE, AND HANDLING

1.4.1 Shipment

1.4.1.1 Preparation

Digging and preparation for shipment shall be done in a manner that will not cause shock or damage to branches, trunk, or root systems.

a. Balled and Burlapped (BB) Plants: Ball size and ratio shall be provided as recommended by AAN-01. The ball shall be of a diameter and depth to encompass enough fibrous and feeding root system necessary for the full recovery of the plant. Removal shall be accomplished by hand digging or mechanical devices. Center the plant stem or trunk in the ball and clean cut all roots

at the ball surface. No roots shall be pulled from the ground. The root ball shall be completely wrapped with burlap or other suitable material and securely laced with twine.

b. Balled and Potted (Pot) Plants: Ball size and ratio shall be provided as recommended by AAN-01. The ball shall be of a diameter and depth to encompass enough fibrous and feeding root system necessary for the full recovery of the plant. Removal shall be accomplished by hand digging or mechanical devices. The plant stem or trunk shall be centered in the ball and all roots shall be clean cut at the ball surface. No roots shall be pulled from the ground. Containers shall be used to retain the ball unbroken. Container shall be sufficiently rigid to hold ball shape and protect root mass during shipping.

e. Container-Grown (C) Plants: Container size shall be provided as recommended by AAN-01. Plants shall be grown in a container sufficiently long for new fibrous roots to have developed and for root mass to retain its shape and hold together when removed from container. Container shall be sufficiently rigid to hold ball shape and protect root mass during shipping.

1.4.2 Delivery

1.4.2.1 Identification

Plants shall be identified with durable waterproof labels and weather-resistant ink. Plants shall have attached labels stating the correct plant name and size.

1.4.2.2 Protection During Delivery

Plants shall be protected during delivery to prevent desiccation of the plant or damage to the roots or balls. Branches of plants shall be protected by tying-in the branches and covering all exposed branches.

1.4.2.3 Delivered Topsoil

A soil test shall be provided for topsoil delivered to the site. The Contractor shall test the delivered topsoil for nutrient levels, pH, texture, nutrient level, organic matter, or sulfur, and fertilizer rates. The delivered topsoil shall be amended in accordance with the soil tests and results.

1.4.2.4 Soil Amendments

Soil amendments shall be delivered to the site in the original, unopened containers bearing the manufacturer's chemical analysis. In lieu of containers, soil amendments may be furnished in bulk. A chemical analysis shall be provided for bulk deliveries.

1.4.3 Inspection

Plant material shall be inspected upon arrival at the jobsite by the Contracting Officer for conformity to the paragraph PLANTS and paragraph Shipment, and any unacceptable plant material shall be removed from the jobsite.

1.4.4 Storage

1.4.4.1 Plant Storage

Plants not installed on the day of arrival at the site shall be stored and protected in areas designated by the Contracting Officer. Plants shall be protected from exposure to wind and shall be shaded from the sun. Covering that will allow air to circulate and prevent internal heat from building up shall be provided. All plants shall be kept in a moist condition by watering with a fine mist spray until planted.

1.4.4.2 Storage of Other Materials

Soil amendments shall be stored in dry locations away from contaminants. Storage of materials shall be in areas designated or as approved by the Contracting Officer.

1.4.5 Handling

Care shall be taken to avoid injury to plants. Materials shall not be dropped from vehicles. Balled and burlapped plants shall be handled carefully to avoid cracking or breaking the earth ball and container-grown plants shall be handled by the container. Plants shall not be handled by the trunk or stems.

1.4.5.1 Time Limitation

a. Mulch: Limitation of time between installing plant and placing mulch is 2 hours.

b. Transplanting Existing Plants: Limitation of time between digging and replanting existing plant material is one hour.

1.5 WARRANTY

Furnished plants shall be guaranteed to be in a vigorous growing condition for a period of 12 months regardless of the contract time period. A plant shall be replaced one time under this guarantee. Transplanted existing plants require no guarantee. A written calendar time period for the guarantee of plant growth shall be furnished to the Contracting Officer.

PART 2 PRODUCTS

2.1 PLANTS

2.1.1 Varieties

Plants shall be nursery grown or plantation grown stock conforming to AAN-01 and shall be of the varieties specified in the plant list bearing botanical names listed in one or more of the publications listed under "Nomenclature" in AAN-01.

2.1.2 Substitutions

Substitutions will not be permitted without written request from the Contractor for approval by the Contracting Officer.

2.1.3 Growing Conditions

Plants shall be grown in the same USDA Hardiness Zone that is the USDA Hardiness Zone of the project.

2.1.4 Quality

Well shaped, well grown, vigorous, healthy plants having healthy and well branched root systems shall be provided. Plants shall be provided free from disease, harmful insects and insect eggs, sun-scald injury, disfigurement and abrasion. Plants shall be provided that are typical of the species or variety and conforming to standards as set forth in AAN-01 and as specified herein.

2.1.4.1 Shade and Flowering Trees

A height relationship to caliper shall be provided as recommended by AAN-01. Height of branching should bear a relationship to the size and variety of tree specified and with the crown in good balance with the trunk. Trees shall not be "poled" or the leader removed.

a. Single stem: Trunk shall be reasonably straight and symmetrical with crown and have a persistent main leader.

b. Multi-stem: All countable stems, in aggregate, shall average the size specified. To be considered a stem, there should be no division of the trunk which branches more than 150 mm from ground level.

c. Specimen: A plant shall be provided that is well branched and pruned naturally according to the species. The form of growth desired, which may not be in accordance with natural growth habit, shall be as indicated.

2.1.4.2 Deciduous Shrub

Plants shall be provided that have the height and number of primary stems as recommended by AAN-01. An acceptable plant shall be well shaped with sufficient well-spaced side branches recognized by the trade as typical for the variety grown in the region.

2.1.4.3 Coniferous Evergreen

Trees shall be provided that have the height-to-spread ratio as recommended by AAN-01. Trees shall not be "poled" or the leader removed. An acceptable plant shall be heavy, well shaped and be a tightly knit plant. The form of growth desired shall be as indicated.

2.1.4.4 Broadleaf Evergreen

Plants shall be provided that have ratio of height-to-spread as recommended by AAN-01. An acceptable plant shall be well shaped and recognized by the trade as typical for the variety grown in the region.

2.1.4.5 Groundcovers and Vines

Plants shall be provided with the minimum number of runners and length of runner as recommended by AAN-01. Plants shall be furnished that have heavy, well developed and balanced top with vigorous well developed root system and shall be furnished in containers.

2.1.5 Size

Plants shall be furnished in sizes indicated. Plants larger in size than specified may be provided at no additional cost to the Government.

2.1.6 Measurement

Plant measurements shall be in accordance with AAN-01.

2.2 TOPSOIL

Topsoil shall be the naturally occuring sandy loam with a minimim organic content of 2%. The pH range shall be 5.5 to 6.0 for ericaceous plants and 6.0 ato 6.5 for other plants.

2.2.1 Soil Test

A soil test shall be provided for delivered topsoil to establish nutrient levels, pH, texture, organic matter percentage, bulk density and recommended lime/sulfur and fertilizer rates.

2.3 SOIL AMENDMENTS

Soil amendments consist of fertilizer, organic soil amendments and soil conditioner.

2.3.1 Fertilizer

Fertilizer shall be commercial grade, free flowing, uniform in composition and conforming to CID A-A-1909.

2.3.1.1 Dry Fertilizer

a. Granular fertilizer : Consists of nitrogen-phosphorous-potassium ratio: 10 percent nitrogen 6 percent phosphorous, and 4 percent potassium.

b. Controlled-Release Fertilizer: Consists of nitrogen-phosphorous-potassium ratio: 10 percent nitrogen 6 percent phosphorous, and 4 percent potassium. Controlled-release fertilizer may be in packet or tablet form.

2.3.1.2 Liquid Fertilizer

Commercially available liquid fertilizer shall consist of completely soluble plant foods suitable for application as foliage spray.

2.3.2 Organic Soil Amendments

2.3.2.1 Sand

Sand shall be clean and free of toxic materials and at least 95 percent by weight shall pass a 10-mesh sieve, and 10 percent by weight shall pass a 16-mesh sieve.

2.3.2.2 Rotted Manure

Rotted manure shall be unleached stable or cattle manure containing not more than 25 percent by volume of straw, sawdust, or other bedding

materials and containing no chemicals or ingredients harmful to plants. The manure shall be heat treated to kill weed seeds and be free of stones, sticks, and soil.

2.3.2.3 Decomposed Wood Derivatives

Decomposed wood derivatives shall be ground bark, sawdust, or other wood waste material free of stones, sticks, and toxic substances harmful to plants and stabilized with nitrogen and having the following properties:

Particle size	Minimum percent by weight passing
No. 4 mesh screen	95
No. 8 mesh screen	80

Nitrogen Content	Minimum percent based on dry weight
Pine Bark	1.0

2.3.3 Soil Conditioner

For single use or in combination to meet requirements for topsoil.

2.3.3.1 Gypsum

Gypsum shall be commercially packaged, free flowing, and a minimum of 95 percent calcium sulfate by volume.

2.3.3.2 Iron Sulfate

Iron sulfate shall be commercial grade.

2.4 MULCH

Mulch shall be free from weeds, mold and other deleterious materials.

2.4.1 Organic Mulch Material

Organic mulch materials shall be ground or shredded bark.

2.5 GUYING AND STAKING MATERIAL

2.5.1 Stakes

Stakes for tree support shall be rough sawn wood, free from knots, rot, cross grain, or other defects that would impair the strength. Standard stakes shall be hardwood or fir treated with pentachlorophenol.

2.5.1.1 Bracing Stakes

Bracing stakes shall be a minimum of 50 mm or 60 mm in diameter by 2400 mm long and pointed at one end.

2.5.1.2 Ground Stakes

Ground stakes shall be a minimum of 50 mm by 50 mm or 60 mm in diameter by 900 mm long and pointed at one end.

2.5.2 Guying Material

2.5.2.1 Guying Wire

Guying wire shall be 12-gauge annealed galvanized steel wire.

2.5.2.2 Guying Cable

Guying cable shall be a minimum of five-strand, 4.76 mm diameter cadmium plated steel cable.

2.5.3 Chafing Guard

Hose chafing guards shall be new or used 2-ply reinforced rubber or plastic hose and shall be all the same color on the project. Length shall be 1-1/2 times the circumference of the plant at its base.

2.5.4 Flags

Flags to be fastened to guys shall be white surveyor's plastic tape, 150 mm in length.

2.5.5 Turnbuckles

Turnbuckles shall be galvanized or cadmium-plated steel and have a 76.2 mm minimum lengthwise opening fitted with screw eyes.

2.6 EDGING MATERIAL

2.6.1 Steel

Steel edging shall be galvanized with slots provided for stakes and shall be at least 3 mm thick and 100 mm wide, and supplied in at least 4800 mm lengths.

2.6.2 Aluminum

Aluminum edging shall be black electrostatically painted aluminum alloy 6061-T6 hardness, 140 mm deep by 4.8 mm thick in 4.88 m lengths with horizontal undulations.

2.6.3 Anchors

Edging material anchors shall be as recommended by the manufacturer.

2.7 WATER

Water shall not contain elements toxic to plant life.

2.8 EROSION CONTROL MATERIAL

2.8.1 Soil Erosion Control Blanket

Blanket shall be machine-produced mat of wood excelsior formed from a web of interlocking wood fibers, covered on one side with either knitted straw blanket-like mat-construction, covered with biodegradable plastic mesh, or interwoven with biodegradable thread, plastic netting or twisted kraft paper cord netting.

2.8.2 Soil Erosion Control Net

Control net shall be heavy, twisted jute mesh weighing approximately 600 grams per meter and 1200 mm wide with mesh openings of approximately 25 mm square.

2.8.3 Anchors

Erosion control anchors shall be as recommended by the manufacturer.

PART 3 EXECUTION

3.1 EXAMINATION

3.1.1 Verify Grades

The Contracting Officer shall verify the finished grades are as indicated on drawings, and the placing of topsoil and smooth grading has been completed in accordance with Section 02225 SITE GRADING for EARTHWORK and ROADWAYS.

3.1.2 Underground Obstructions to Planting

The location of underground utilities and facilities shall be verified. Damage to underground utilities and facilities shall be repaired at the Contractor's expense.

3.2 SITE PREPARATION

3.2.1 Layout

Plant material locations and bed outlines shall be staked on the project site before any excavation is made. Plant material locations may be adjusted by the Contracting Officer to meet field conditions.

3.2.2 Protection of Existing Vegetation

If lawns have been established prior to planting operations, the surrounding turf shall be covered before excavations are made in a manner that will protect turf areas. Existing trees, shrubbery, and beds that are to be preserved shall be barricaded in a manner that will effectively protect them during planting operations.

3.3 EXCAVATION

3.3.1 Obstructions Below Ground or Poor Drainage

When obstructions below ground or poor drainage affect the contract operation, proposed adjustments to plant location, type of plant and planting method or drainage correction shall be submitted to and approved by the Contracting Officer.

3.3.2 Turf Removal

Where planting beds occur in existing turf areas, the turf shall be removed to a depth that will ensure the removal of the entire root system.

3.3.3 Plant Pits

Plant pits shall be dug to produce vertical sides and flat, uncompacted bottoms. When pits are dug with an auger and the sides of the pits become glazed, the glazed surface shall be scarified. The minimum allowable dimensions of plant pits shall be 150 mm deeper than the depth of ball or the depth of base roots; for ball or root spreads up to 600 mm, pit diameters shall be twice the root spread; for ball or root spreads from 600 to 1200 mm, pit diameters shall be 600 mm greater; for ball or root spreads over 1200 mm, pit diameters shall be 1-1/2 times the ball root spread.

3.3.4 Subsoil Drainage for Plant Pits and Beds

Subsoil drainage shall be provided as indicated. The subsoil drainage shall be installed as specified in Section 02710 SUBDRAINAGE SYSTEM.

3.4 PERCOLATION TEST

Test for percolation shall be done to determine positive drainage of plant pits and beds. The Contracting Officer shall be notified in writing of all soil and drainage conditions detrimental to growth of plant material and shall submit proposal for correcting the condition.

3.5 PLANTING TIMES AND CONDITIONS

3.5.1 Deciduous Planting Time

Install deciduous plants from October 1 to April 15 when the ground is not frozen or dry.

3.5.2 Evergreen Planting Time

Install evergreen plants from September 15 to November 15 in Fall and from March 1 to April 15 in Spring.

3.5.3 Planting Conditions

Planting operations shall be performed only during periods when beneficial results can be obtained. When drought, excessive moisture or other unsatisfactory conditions prevail, the work shall be stopped when directed. When special conditions warrant a variance to the planting operations, proposed planting times shall be submitted to and approved by the Contracting Officer.

3.6 INSTALLATION

3.6.1 Erosion Control

Where erosion control material is indicated or required, material shall be installed in accordance with manufacturer's instructions. Placement of the erosion control material shall be accomplished without damage to installed material or without deviation to finished grade.

3.6.2 Setting Plants

Plants shall be set plumb and held in position until sufficient soil has been firmly placed around roots or ball. Plants shall be set in relation to surrounding grade so that they are even with the depth at which they were grown in the nursery, or container.

3.6.3 Controlled-Release Fertilizer

Controlled-release fertilizer shall be placed in packet or tablet form in the plant pit in the immediate vicinity of the feeding roots in accordance with the manufacturer's recommendations.

3.6.4 Balled and Burlapped Plants

Materials shall be removed that are metal, plastic, nylon or treated burlap, prior to backfilling. Balled and burlapped stock shall be backfilled with topsoil to approximately half the depth of the ball and then tamped and watered. Biodegradable burlap and tying material shall be carefully opened and folded back. The backfill shall be completed, tamped and watered. A 100 mm high earth saucer shall be formed around individual plants.

3.6.5 Container-Grown, Balled and Platformed and Balled and Potted Plants

Non-biodegradable containers or platforms shall be removed without damage to the plant or root system. Biodegradable containers shall be split. The backfill shall be completed as specified for BB plants.

3.6.6 Groundcover Bed

3.6.6.1 Plant Beds in Existing Soil

Bed shall be tilled to a minimum depth of 150 mm where existing soil is to be used in-place. Selected soil amendments shall be spread uniformly over the bed and filled in to obtain a uniform and well pulverized soil mix. All sticks, stones, roots and other objectionable materials shall be removed from the surface. The bed shall be brought to a smooth and even surface blending to existing areas.

3.6.6.2 Plant Beds in Replaced Soil

When soil replacement is required, the existing soil shall be excavated and removed to a minimum depth of 150 mm and topsoil shall be placed on previously scarified subsoil to a minimum depth of 150 mm. The bed shall be brought to a smooth and even surface blending to existing areas. Settlement shall be allowed for.

3.6.6.3 Groundcover

Groundcover may be planted after the mulch is in place. Contaminating the mulch with soil shall be avoided.

3.6.7 Staking and Guying

3.6.7.1 One Bracing Stake

Trees 1.2 to 1.8 m tall shall be held in place with one bracing stake. The tree shall be held firmly to the stake with a double strand of wire. A chafing guard shall be used where the wire contacts the tree. Bracing stakes shall be driven vertically into firm ground and shall not injure the ball or roots.

3.6.7.2 Two Bracing Stakes

Trees over 1.8 m tall shall be held in place with two bracing stakes placed on opposite sides. The tree shall be held firmly between the stakes with a double strand of wire. Chafing guards shall be used where the wire contacts the tree. Bracing stakes shall be driven vertically into firm ground and shall not injure the ball or roots.

3.6.7.3 Three Guying Wires

Trees shall be held firmly in place with three guying lines of cable spaced equidistantly around the tree. The line shall be anchored with ground stakes. The line shall be anchored to the tree at a point equal to one half its height. Chafing guards shall be used where the line contacts the tree. One turnbuckle shall be centered on each line for tree straightening purposes. Ground stakes shall be driven into firm ground outside the earth saucer and plant pit with the top of the stake flush with the ground surface.

3.6.8 Flags

A flag shall be securely fastened to each guying line to be visible by pedestrians.

3.6.9 Edging Material

Edging material shall be installed in accordance with the manufacturer's recommendations and/or as indicated.

3.7 FINISHING

3.7.1 Plant Beds

Planted areas shall be uniformly edged to provide a clear-cut division line between the planted area and the adjacent turf area and to provide a shape as indicated. The entire planted area shall be raked and smoothed while maintaining the earth saucers.

3.7.2 Pruning

For existing trees or new trees that are damaged, clean collar cuts shall be made with the parent branch. Improper cuts, stubs, dead and broken branches shall be removed in accordance with the International Society of Arboriculture (ISA) standards. "Headback" cuts at right angle to the line of growth shall not be permitted. Trees shall not be poled or the leader removed, nor shall the leader be pruned or "topped of."

3.7.3 Mulch

Mulch shall be spread to a uniform thickness of 100 mm within 48 hours after planting. Mulch shall be kept out of the crowns of shrubs and off buildings, sidewalks and other facilities.

3.7.4 Water

Plants shall be watered as necessary to maintain an adequate supply of moisture within the root zone. Run-off, puddling and wilting shall be prevented.

3.8 MAINTENANCE DURING PLANTING OPERATION

Installed plants shall be maintained in a healthy growing condition. Maintenance operations shall begin immediately after each plant is installed and shall continue until the plant establishment period commences. The maintenance includes watering, pruning, straightening and other necessary operations. Plant beds and earth saucers shall be kept free of weeds, grass and other undesired vegetation. Plants shall be checked for settlement and shall be reset proper grade as necessary. Run-off, puddling and wilting shall be prevented.

3.9 CARE OF EXISTING PLANT MATERIAL

3.9.1 Identification

Existing plant material to be treated shall be tagged on the site and/or as indicated.

3.9.2 Fertilizing Existing Trees

Holes shall be dug by hand or mechanical devices, a minimum 40 mm in diameter and 500 mm deep, distributed evenly at not more than 600 mm on center throughout the outer half of the branch spread zone of each tree.

3.9.2.1 Dry Fertilizer

Dry fertilizer shall be placed in the hole to within 100 mm of the surrounding grade.

3.9.2.2 Application

Packet, tablet or wedge-form fertilizer shall be applied in accordance with manufacturer's recommendations.

3.9.2.3 Backfill

Topsoil or sand shall be used as backfill in the hole and shall be blended to the surrounding grade.

3.9.3 Pruning and Cavity Work

A certified arborist shall perform the required pruning and cavity work on existing plants. Dead wood larger than 15 mm in diameter, branches interfering with or hindering the healthy growth of plants, and diseased branches shall be removed. Cut back or remove branches as necessary to give the plants their genetic and characteristic shape and balance. Stubs, incorrect cuts, and broken limbs shall be removed. Clean collar cuts shall be made with the parent limb or trunk. Wounds larger than 15 mm in diameter and scars from contractor operations shall be cleaned. Cavities shall be shaped to provide drainage and decayed wood shall be removed.

3.10 RESTORATION AND CLEAN UP

3.10.1 Restoration

Turf areas, pavements and facilities that have been damaged from the planting operation shall be restored to original condition at the Contractor's expense.

3.10.2 Clean Up

Excess and waste material from the planting operation shall be removed and disposed of off the site. Adjacent paved areas shall be cleared.

3.11 PLANT ESTABLISHMENT PERIOD

3.11.1 Commencement

On completion of the last day of the planting operation, the plant establishment period for maintaining installed plants in a healthy growing condition shall commence and shall be in effect for the remaining contract time period not to exceed 12 months. When the planting operation extends over more than one season or there is a variance to the planting times, plant establishment periods shall be established for the work completed, as directed. Written calendar time period shall be furnished to the Contracting Officer for the beginning of the plant establishment period. When there is more than one plant establishment period, describe the boundaries of the planted area covered for each period.

3.11.2 Maintenance During Establishment Period

3.11.2.1 General

Maintenance of plants shall include straightening plants, tightening stakes and guying material, protecting plant areas from erosion, maintaining erosion control material, supplementing mulch, removing dead or broken tip growth by pruning, maintaining edging of beds, checking for girdling of plants and maintaining plant labels, watering, weeding, removing and replacing unhealthy plants.

3.11.2.2 Water

The plants shall be watered as necessary to maintain an adequate supply of moisture within the root zone. An adequate supply of moisture is estimated to be the equivalent of one inch of absorbed water per week delivered in the form of natural rain or augmented as required by periodic waterings. Run-off, puddling and wilting shall be prevented.

3.11.2.3 Weeding

Grass and weeds in earth saucers and plant beds shall not be allowed to reach a height of 80 mm before being completely removed, including the root growth.

3.11.2.4 Unhealthy Plants

A plant shall be considered unhealthy or dead when the main leader has died back, or 25 percent of the crown is dead. Determine the cause for an unhealthy plant. Unhealthy or dead plants shall be removed immediately and shall be replaced as soon as seasonal conditions permit.

3.11.2.5 Fertilizing

The plants shall be topdressed at least once during the period of establishment with dry fertilizer at the rate of .05 kilograms per square meter of plant pit or bed area or foliar feed plants with liquid fertilizer. Dry fertilizer adhering to plants shall be flushed off. The application shall be timed prior to the advent of winter dormancy.

3.11.2.6 Settlement

Topsoil shall be added to maintain grade and to maintain earth saucers. Serious settlement affecting the setting of the plant in relation to the depth at which it was grown requires replanting in accordance with paragraph INSTALLATION.

3.11.2.7 Maintenance Report

A written record shall be furnished to the Contracting Officer of the maintenance work performed, the quality of plant losses, cause for plant loss and replacements made on each site visit.

3.11.2.8 Maintenance Instructions

Written instructions shall be furnished to the Contracting Officer for year-round care of installed plants.

3.11.3 Replacement Plants

Plants shall be provided for replacement in accordance with paragraph PLANTS. Replacement plants shall be installed in accordance with paragraph INSTALLATION. No extended plant establishment period Shall be required for replacement plants. A plant will be replaced in accordance with paragraph WARRANTY.

3.12 FINAL ACCEPTANCE

3.12.1 Preliminary Inspection

Prior to the completion of the contract, the plant establishment period or whichever occurs first a preliminary inspection shall be held by the Contracting Officer. Time for the inspection will be established in writing. The quantity and type of plants installed and the acceptability of the plants in accordance with the plant establishment period shall be determined.

3.12.2 Final Inspection

A final inspection shall be held by the Contracting Officer to determine that deficiencies noted in the preliminary inspection have been corrected. Time for the inspection shall be established in writing. Acceptance of the planting operation is subject to the guarantee of plant growth.

-- End of Section --

SECTION 03100

STRUCTURAL CONCRETE FORMWORK

PART 1 GENERAL

1.1 REFERENCES

The publications listed below form a part of this specification to the extent referenced. The publications are referred to in the text by basic designation only.

ACI INTERNATIONAL (ACI)

ACI 347R (1994) Guide to Formwork for Concrete

DEPARTMENT OF COMMERCE (DOC)

DOC PS 1 (1983) Construction and Industrial Plywood

1.2 SUBMITTALS

Government approval is required for submittals with a "GA" designation; submittals having an "FIO" designation are for information only. The following shall be submitted in accordance with Section 01330 SUBMITTAL PROCEDURES:

SD-06 Instructions

Form Releasing Agents; FIO;AR.

Manufacturer's recommendation on method and rate of application of form releasing agents.

1.3 DESIGN

Formwork shall be designed in accordance with methodology of ACI 347R for anticipated loads, lateral pressures, and stresses. Forms shall be capable of producing a surface which meets the requirements of the class of finish specified in Section 03300 CAST-IN-PLACE STRUCTURAL CONCRETE. Forms shall be capable of withstanding the pressures resulting from placement and vibration of concrete.

PART 2 PRODUCTS

2.1 FORM MATERIALS

2.1.1 Forms For Class B Finish

Forms for Class B finished surfaces shall be plywood panels conforming to DOC PS 1, Grade B-B concrete form panels, Class I or II. Other form materials or liners may be used provided the smoothness and appearance of concrete produced will be equivalent to that produced by the plywood concrete form panels. Forms for round columns shall be the prefabricated seamless type.

2.1.2 Forms For Class D Finish

Forms for Class D finished surfaces, except where concrete is placed against earth, shall be wood or steel or other approved concrete form material.

2.1.3 Form Ties

Form ties shall be factory-fabricated metal ties, shall be of the removable or internal disconnecting or snap-off type, and shall be of a design that will not permit form deflection and will not spall concrete upon removal. Solid backing shall be provided for each tie. Except where removable tie rods are used, ties shall not leave holes in the concrete surface less than 6 mm nor more than 25 mm deep and not more than 25 mm in diameter. Removable tie rods shall be not more than 38 mm in diameter.

2.1.4 Form Releasing Agents

Form releasing agents shall be commercial formulations that will not bond with, stain or adversely affect concrete surfaces. Agents shall not impair subsequent treatment of concrete surfaces depending upon bond or adhesion nor impede the wetting of surfaces to be cured with water or curing compounds.

PART 3 EXECUTION

3.1 INSTALLATION

3.1.1 Formwork

Forms shall be mortar tight, properly aligned and adequately supported to produce concrete surfaces meeting the surface requirements specified in Section 03300 CAST-IN-PLACE STRUCTURAL CONCRETE and conforming to construction tolerance given in TABLE 1. Where concrete surfaces are to have a Class B finish, joints in form panels shall be arranged as approved. Where forms for continuous surfaces are placed in successive units, care shall be taken to fit the forms over the completed surface so as to obtain accurate alignment of the surface and to prevent leakage of mortar. Forms shall not be reused if there is any evidence of surface wear and tear or defects which would impair the quality of the surface. Surfaces of forms to be reused shall be cleaned of mortar from previous concreting and of all other foreign material before reuse. Form ties that are to be completely withdrawn shall be coated with a nonstaining bond breaker.

3.2 CHAMFERING

Except as otherwise shown, external corners that will be exposed shall be chamfered, beveled, or rounded by moldings placed in the forms.

3.3 COATING

Forms for Class B finished surfaces shall be coated with a form releasing agent before the form or reinforcement is placed in final position. The coating shall be used as recommended in the manufacturer's printed or written instructions. Forms for Class D finished surfaces may be wet with water in lieu of coating immediately before placing concrete, except that in cold weather with probable freezing temperatures coating shall be mandatory. Surplus coating on form surfaces and coating on reinforcing steel and construction joints shall be removed before placing concrete.

3.4 REMOVAL OF FORMS

Forms shall be removed in a manner that will prevent injury to the concrete and ensure the complete safety of the structure. Formwork for columns, walls, side of beams and other parts not supporting the weight of concrete may be removed when the concrete has attained sufficient strength to resist damage from the removal operation but not before at least 24 hours has elapsed since concrete placement. Supporting forms and shores shall not be removed from beams, floors and walls until the structural units are strong enough to carry their own weight and any other construction or natural loads. In no case will supporting forms or shores be removed before the concrete strength has reached 70 percent of design strengths as determined by field cured cylinders or other approved methods. This strength shall be demonstrated by job-cured test specimens, and by a structural analysis considering the proposed loads in relation to these test strengths and the strength of forming and shoring system. The job-cured test specimens for form removal purposes shall be provided in numbers as directed and shall be in addition to those required for concrete quality control. The specimens shall be removed from molds at the age of 24 hours and shall receive, insofar as possible, the same curing and protection as the structures they represent.

TABLE 1

TOLERANCES FOR FORMED SURFACES

1. Variations from the plumb:	In any 3 m of length ----- 6 mm
a. In the lines and surfaces of columns, piers, walls and in arises	Maximum for entire length ----- 25 mm
b. For exposed corner columns, control-joint grooves, and other conspicuous lines	In any 6 m of length ----- 6 mm Maximum for entire length ---- 13 mm
2. Variation from the level or from the grades indicated on the drawings:	In any 3 m of length ----- 6 mm In any bay or in any 6 m of length ---------- 10 mm
a. In slab soffits, ceilings, beam soffits, and in arises, measured before removal of supporting shores	Maximum for entire length ---- 20 mm
b. In exposed lintels, sills, parapets, horizontal grooves, and other conspicuous lines	In any bay or in any 6 m of length ---------- 6 mm Maximum for entire length ---- 13 mm
3. Variation of the linear building lines from established position in plan	In any 6 m ---------- 13 mm Maximum ---------- 25 mm
4. Variation of distance between walls, columns, partitions	6 mm per 3 m of distance, but not more than 13 mm in any one bay, and not more than 25 mm total variation

TABLE 1

TOLERANCES FOR FORMED SURFACES

5. Variation in the sizes and locations of sleeves, floor openings, and wall opening	Minus	6 mm
	Plus	13 mm
6. Variation in cross-sectional dimensions of columns and beams and in the thickness of slabs and walls	Minus	6 mm
	Plus	13 mm
7. Footings:		
a. Variation of dimensions in plan when formed or plus 75 mm when placed against unformed excavation	Minus	13 mm
	Plus	50 mm
b. Misplacement of eccentricity	2 percent of the footing width in the direction of misplacement but not more than	50 mm
c. Reduction in thickness	Minus	5 percent of specified thickness
8. Variation in steps:	Riser	3 mm
a. In a flight of stairs	Tread	6 mm
b. In consecutive steps	Riser	2 mm
	Tread	3 mm

-- End of Section --

SECTION 03200

CONCRETE REINFORCEMENT

PART 1 GENERAL

1.1 REFERENCES

The publications listed below form a part of this specification to the extent referenced. The publications are referred to in the text by basic designation only.

ACI INTERNATIONAL (ACI)

ACI 318M	(1995) Building Code Requirements for Structural Concrete and Commentary (Metric)

AMERICAN SOCIETY FOR TESTING AND MATERIALS (ASTM)

ASTM A 53	(1996) Pipe, Steel, Black and Hot-Dipped, Zinc-Coated, Welded and Seamless
ASTM A 185	(1994) Steel Welded Wire Fabric, Plain, for Concrete Reinforcement
ASTM A 497	(1995) Steel Welded Wire Fabric, Deformed, for Concrete Reinforcement
ASTM A 615/A 615M	(1996a) Deformed and Plain Billet-Steel Bars for Concrete Reinforcement
ASTM A 675/A 675M	(1990a; R 1995) Steel Bars, Carbon, Hot-Wrought, Special Quality, Mechanical Properties
ASTM A 706/A 706M	(1995b) Low-Alloy Steel Deformed and Plain Bars for Concrete Reinforcement

CONCRETE REINFORCING STEEL INSTITUTE (CRSI)

CRSI MSP-1	(1996) Manual of Standard Practice

1.2 SUBMITTALS

Government approval is required for submittals with a "GA" designation; submittals having an "FIO" designation are for information only. The following shall be submitted in accordance with Section 01330 SUBMITTAL PROCEDURES:

SD-04 Drawings

Concrete Reinforcement System; FIO.

Detail drawings showing reinforcing steel placement, schedules, sizes,

grades, and splicing and bending details. Drawings shall show support details including types, sizes and spacing.

SD-13 Certificates

Reinforcing Steel; FIO;AR.

Certified copies of mill reports attesting that the reinforcing steel furnished contains no less than 25 percent recycled scrap steel and meets the requirements specified herein, prior to the installation of reinforcing steel.

1.3 DELIVERY AND STORAGE

Reinforcement and accessories shall be stored off the ground on platforms, skids, or other supports.

PART 2 PRODUCTS

2.1 DOWELS

Dowels shall conform to ASTM A 675/A 675M, Grade 80. Steel pipe conforming to ASTM A 53, Schedule 80, may be used as dowels provided the ends are closed with metal or plastic inserts or with mortar.

2.2 REINFORCING STEEL

Reinforcing steel shall be deformed bars conforming to ASTM A 615/A 615M or ASTM A 706/A 706M, grades and sizes as indicated.

2.3 WELDED WIRE FABRIC

Welded wire fabric shall conform to ASTM A 185 and ASTM A 497.

2.4 WIRE TIES

Wire ties shall be 16 gauge or heavier black annealed steel wire.

2.5 SUPPORTS

Bar supports for formed surfaces shall be designed and fabricated in accordance with CRSI MSP-1 and shall be steel or precast concrete blocks. Precast concrete blocks shall have wire ties and shall be not less than 100 by 100 mm when supporting reinforcement on ground. Precast concrete block shall have compressive strength equal to that of the surrounding concrete. Where concrete formed surfaces will be exposed to weather or where surfaces are to be painted, steel supports within 13 mm of concrete surface shall be galvanized, plastic protected or of stainless steel. Concrete supports used in concrete exposed to view shall have the same color and texture as the finish surface. For slabs on grade, supports shall be precast concrete blocks, plastic coated steel fabricated with bearing plates, or specifically designed wire-fabric supports fabricated of plastic.

PART 3 EXECUTION

3.1 REINFORCEMENT

Reinforcement shall be fabricated to shapes and dimensions shown and shall conform to the requirements of ACI 318M . Reinforcement shall be cold

bent unless otherwise authorized. Bending may be accomplished in the field or at the mill. Bars shall not be bent after embedment in concrete. Safety caps shall be placed on all exposed ends of vertical concrete reinforcement bars that pose a danger to life safety. Wire tie ends shall face away from the forms.

3.1.1 Placement

Reinforcement shall be free from loose rust and scale, dirt, oil, or other deleterious coating that could reduce bond with the concrete. Reinforcement shall be placed in accordance with ACI 318M at locations shown plus or minus one bar diameter. Reinforcement shall not be continuous through expansion joints and shall be as indicated through construction or contraction joints. Concrete coverage shall be as indicated or as required by ACI 318M . If bars are moved more than one bar diameter to avoid interference with other reinforcement, conduits or embedded items, the resulting arrangement of bars, including additional bars required to meet structural requirements, shall be approved before concrete is placed.

3.1.2 Splicing

Splices of reinforcement shall conform to ACI 318M and shall be made only as required or indicated. Splicing shall be by lapping or by mechanical or welded butt connection; except that lap splices shall not be used for bars larger than No. 11 unless otherwise indicated. Lapped bars shall be placed in contact and securely tied or spaced transversely apart to permit the embedment of the entire surface of each bar in concrete. Lapped bars shall not be spaced farther apart than one-fifth the required length of lap or 150 mm. Mechanical butt splices shall be in accordance with the recommendation of the manufacturer of the mechanical splicing device. Butt splices shall develop 125 percent of the specified minimum yield tensile strength of the spliced bars or of the smaller bar in transition splices. Bars shall be flame dried before butt splicing. Adequate jigs and clamps or other devices shall be provided to support, align, and hold the longitudinal centerline of the bars to be butt spliced in a straight line.

3.2 WELDED-WIRE FABRIC PLACEMENT

Welded-wire fabric shall be placed in slabs as indicated. Fabric placed in slabs on grade shall be continuous between expansion, construction, and contraction joints. Fabric placement at joints shall be as indicated. Lap splices shall be made in such a way that the overlapped area equals the distance between the outermost crosswires plus 50 mm. Laps shall be staggered to avoid continuous laps in either direction. Fabric shall be wired or clipped together at laps at intervals not to exceed 1.2 m. Fabric shall be positioned by the use of supports.

3.3 DOWEL INSTALLATION

Dowels shall be installed in slabs on grade at locations indicated and at right angles to joint being doweled. Dowels shall be accurately positioned and aligned parallel to the finished concrete surface before concrete placement. Dowels shall be rigidly supported during concrete placement. One end of dowels shall be coated with a bond breaker.

-- End of Section --

SECTION 03250

EXPANSION JOINTS AND CONTRACTION JOINTS

PART 1 GENERAL

1.1 REFERENCES

The publications listed below form a part of this specification to the extent referenced. The publications are referred to in the text by basic designation only.

AMERICAN HARDBOARD ASSOCIATION (AHA)

AHA A135.4	(1995) Basic Hardboard

AMERICAN SOCIETY FOR TESTING AND MATERIALS (ASTM)

ASTM C 919	(1984; R 1992) Standard Practice for Use of Sealants in Acoustical Applications
ASTM C 920	(1994) Elastomeric Joint Sealants
ASTM D 1190	(1994) Concrete Joint Sealer, Hot-Poured Elastic Type
ASTM D 1191	(1984; R 1994) Test Methods for Concrete Joint Sealers
ASTM D 1751	(1983; R 1991) Preformed Expansion Joint Filler for Concrete Paving and Structural Construction (Nonextruding and Resilient Bituminous Types)
ASTM D 1752	(1984; R 1992) Preformed Sponge Rubber and Cork Expansion Joint Fillers for Concrete Paving and Structural Construction
ASTM D 1854	(1974; R 1990) Specification forJet-Fuel-Resistant Concrete Joint Sealer, Hot-Poured Elastic Type
ASTM D 1855	(1989) Test Method for Jet-Fuel Resistant Concrete Joint Sealer, Hot-Poured Elastic Type
ASTM D 2628	(1991) Preformed Polychloroprene Elastomeric Joint Seals for Concrete Pavements
ASTM D 2835	(1989; R 1993) Lubricant for Installation of Preformed Compression Seals in Concrete Pavements
ASTM D 5249	(1992) Backer Material for Use With Cold and Hot-Applied Joint Sealants in Portland-Cement Concrete and Asphalt Joints

1.2 SUBMITTALS

Government approval is required for submittals with a "GA" designation; submittals having an "FIO" designation are for information only. The following shall be submitted in accordance with Section 01330 SUBMITTAL PROCEDURES:

SD-01 Data

Preformed Expansion Joint Filler; FIO;AR. Sealant; FIO;AR.

Manufacturer's literature, including safety data sheets, for preformed fillers and the lubricants used in their installation; field-molded sealants and primers (when required by sealant manufacturer); preformed compression seals.

SD-06 Instructions

Preformed Expansion Joint Filler; FIO;AR. Sealant; FIO;AR.

Manufacturer's recommended instructions for installing preformed fillers, field-molded sealants; and preformed compression seals; and for splicing non-metallic waterstops.

SD-13 Certificates

Preformed Expansion Joint Filler; FIO;AR. Sealant; FIO;AR.

Certificates of compliance stating that the joint filler and sealant materials and waterstops conform to the requirements specified.

1.3 DELIVERY AND STORAGE

Material delivered and placed in storage shall be stored off the ground and protected from moisture, dirt, and other contaminants. Sealants shall be delivered in the manufacturer's original unopened containers. Sealants whose shelf life has expired shall be removed from the site.

PART 2 PRODUCTS

2.1 CONTRACTION JOINT STRIPS

Contraction joint strips shall be 3 mm thick tempered hardboard conforming to AHA A135.4, Class 1. In lieu of hardboard strips, rigid polyvinylchloride (PVC) or high impact polystyrene (HIPS) insert strips specifically designed to induce controlled cracking in slabs on grade may be used. Such insert strips shall have removable top section.

2.2 PREFORMED EXPANSION JOINT FILLER

Expansion joint filler shall be preformed material conforming to ASTM D 1751 or ASTM D 1752. Unless otherwise indicated, filler material shall be 10 mm (3/8 inch) thick and of a width applicable for the joint formed. Backer material, when required, shall conform to ASTM D 5249.

2.3 SEALANT

Joint sealant shall conform to the following:

2.3.1 Preformed Polychloroprene Elastomeric Type

ASTM D 2628.

2.3.2 Lubricant for Preformed Compression Seals

ASTM D 2835.

2.3.3 Hot-Poured Type

ASTM D 1190 tested in accordance with ASTM D 1191.

2.3.4 Field Molded Type

ASTM C 920, Type M for horizontal joints or Type NS for vertical joints, Class 25, and Use NT. Bond breaker material shall be polyethylene tape, coated paper, metal foil or similar type materials. The back-up material shall be compressible, non-shrink, nonreactive with sealant, and non-absorptive material type such as extruded butyl or polychloroprene rubber.

2.3.5 Hot-Applied Jet-Fuel Resistant Type

ASTM D 1854 tested in accordance with ASTM D 1855.

PART 3 EXECUTION

3.1 JOINTS

Joints shall be installed at locations indicated and as authorized.

3.1.1 Contraction Joints

Contraction joints may be constructed by inserting tempered hardboard strips or rigid PVC or HIPS insert strips into the plastic concrete using a steel parting bar, when necessary, or by cutting the concrete with a saw after concrete has set. Joints shall be approximately 3 mm wide and shall extend into the slab one-fourth the slab thickness, minimum, but not less than 25 mm.

3.1.1.1 Joint Strips

Strips shall be of the required dimensions and as long as practicable. After the first floating, the concrete shall be grooved with a tool at the joint locations. The strips shall be inserted in the groove and depressed until the top edge of the vertical surface is flush with the surface of the slab. The slab shall be floated and finished as specified. Working of the concrete adjacent to the joint shall be the minimum necessary to fill voids and consolidate the concrete. Where indicated, the top portion of the strip shall be sawed out after the curing period to form a recess for sealer. The removable section of PVC or HIPS strips shall be discarded and the insert left in place. Means shall be provided to insure true alignment of the strips is maintained during insertion.

3.1.1.2 Sawed Joints

Joint sawing shall be early enough to prevent uncontrolled cracking in the

slab, but late enough that this can be accomplished without appreciable spalling. Concrete sawing machines shall be adequate in number and power, and with sufficient replacement blades to complete the sawing at the required rate. Joints shall be cut to true alignment and shall be cut in sequence of concrete placement. Sludge and cutting debris shall be removed.

3.1.2 Expansion Joints

Preformed expansion joint filler shall be used in expansion and isolation joints in slabs around columns and between slabs on grade and vertical surfaces where indicated. The filler shall extend the full slab depth, unless otherwise indicated. The edges of the joint shall be neatly finished with an edging tool of 3 mm (1/8 inch) radius, except where a resilient floor surface will be applied. Where the joint is to receive a sealant, the filler strips shall be installed at the proper level below the finished floor with a slightly tapered, dressed and oiled wood strip temporarily secured to the top thereof to form a recess to the size shown on the drawings. The wood strip shall be removed after the concrete has set. Contractor may opt to use a removable expansion filler cap designed and fabricated for this purpose in lieu of the wood strip. The groove shall be thoroughly cleaned of laitance, curing compound, foreign materials, protrusions of hardened concrete, and any dust which shall be blown out of the groove with oil-free compressed air.

3.1.3 Joint Sealant

Sawed contraction joints and expansion joints in slabs shall be filled with joint sealant, unless otherwise shown. Joint surfaces shall be clean, dry, and free of oil or other foreign material which would adversely affect the bond between sealant and concrete. Joint sealant shall be applied as recommended by the manufacturer of the sealant.

3.1.3.1 Joints With Preformed Compression Seals

Compression seals shall be installed with equipment capable of installing joint seals to the prescribed depth without cutting, nicking, twisting, or otherwise distorting or damaging the seal or concrete and with no more than 5 percent stretching of the seal. The sides of the joint and, if necessary, the sides of the compression seal shall be covered with a coating of lubricant. Butt joints shall be coated with liberal applications of lubricant.

3.1.3.2 Joints With Field-Molded Sealant

Joints shall not be sealed when the sealant material, ambient air, or concrete temperature is less than 4 degrees C. When the sealants are meant to reduce the sound transmission characteristics of interior walls, ceilings, and floors the guidance provided in ASTM C 919 shall be followed. Joints requiring a bond breaker shall be coated with curing compound or with bituminous paint. Bond breaker and back-up material shall be installed where required. Joints shall be primed and filled flush with joint sealant in accordance with the manufacturer's recommendations.

3.2 CONSTRUCTION JOINTS

Construction joints are specified in Section 03300 CAST-IN-PLACE STRUCTURAL CONCRETE except that construction joints coinciding with expansion and contraction joints shall be treated as expansion or contraction joints as applicable.

-- End of Section --

SECTION 03300

CAST-IN-PLACE STRUCTURAL CONCRETE

PART 1 GENERAL

1.1 REFERENCES

The publications listed below form a part of this specification to the extent referenced. The publications are referred to in the text by basic designation only and represent the latest edition in force when this contract is awarded.

ACI INTERNATIONAL (ACI)

ACI 117/117R	Standard Tolerances for Concrete Construction and Materials
ACI 211.1	Standard Practice for Selecting Proportions for Normal, Heavyweight, and Mass Concrete
ACI 214.3R	Simplified Version of the Recommended Practice for Evaluation of Strength Test Results
ACI 305R	Hot Weather Concreting
ACI 318/318R	Building Code Requirements for Reinforced Concrete and Commentary

AMERICAN ASSOCIATION OF STATE HIGHWAY AND TRANSPORTATION OFFICIALS (AASHTO)

AASHTO M 182	Burlap Cloth Made From Jute or Kenaf

AMERICAN SOCIETY FOR TESTING AND MATERIALS (ASTM)

ASTM C 31	Making and Curing Concrete Test Specimens in the Field
ASTM C 33	Concrete Aggregates
ASTM C 39	Compressive Strength of Cylindrical Concrete Specimens
ASTM C 42	Obtaining and Testing Drilled Cores and Sawed Beams of Concrete
ASTM C 78	Flexural Strength of Concrete (Using Simple Beam With Third-Point Loading)
ASTM C 94	Ready-Mixed Concrete

ASTM C 136	Sieve Analysis of Fine and Coarse Aggregates
ASTM C 143	Slump of Hydraulic Cement Concrete
ASTM C 150	Portland Cement
ASTM C 171	Sheet Materials for Curing Concrete
ASTM C 172	Sampling Freshly Mixed Concrete
ASTM C 192	Making and Curing Concrete Test Specimens in the Laboratory
ASTM C 231	Air Content of Freshly Mixed Concrete by the Pressure Method
ASTM C 260	Air-Entraining Admixtures for Concrete
ASTM C 309	Liquid Membrane-Forming Compounds for Curing Concrete
ASTM C 494	Chemical Admixtures for Concrete
ASTM C 552	Cellular Glass Thermal Insulation
ASTM C 578	Rigid, Cellular Polystyrene Thermal Insulation
ASTM C 591	Unfaced Preformed Rigid Cellular Polyisocyanurate Thermal Insulation
ASTM C 618	Coal Fly Ash and Raw or Calcined Natural Pozzolan for Use as a Mineral Admixture in Portland Cement Concrete
ASTM C 881	Epoxy-Resin-Base Bonding Systems for Concrete
ASTM C 940	Expansion and Bleeding of Freshly Mixed Grouts for Preplaced-Aggregate Concrete in the Laboratory
ASTM C 989	Ground Granulated Blast-Furnace Slag for Use in Concrete and Mortars
ASTM C 1017	Chemical Admixtures for Use in Producing Flowing Concrete
ASTM C 1059	Latex Agents for Bonding Fresh to Hardened Concrete
ASTM C 1064	Temperature of Freshly Mixed Portland Cement Concrete
ASTM C 1077	Laboratories Testing Concrete and Concrete Aggregates for Use in Construction and Criteria for Laboratory Evaluation

ASTM C 1107	Packaged Dry, Hydraulic-Cement Grout (Nonshrink)
ASTM D 75	Sampling Aggregates
ASTM D 1751	Preformed Expansion Joint Filler for Concrete Paving and Structural Construction (Nonextruding and Resilient Bituminous Types)
ASTM E 96	Water Vapor Transmission of Materials
ASTM E 1155	Determining Floor Flatness and Levelness Using the F-Number System

CORPS OF ENGINEERS (COE)

COE CRD-C 94	Surface Retarders
COE CRD-C 104	Method of Calculation of the Fineness Modulus of Aggregate
COE CRD-C 400	Requirements for Water for Use in Mixing or Curing Concrete
COE CRD-C 521	Standard Test Method for Frequency and Amplitude of Vibrators for Concrete
COE CRD-C 540	Standard Specification for Nonbituminous Inserts for Contraction Joints in Portland Cement Concrete Airfield Pavements, Sawable Type
COE CRD-C 572	Corps of Engineers Specifications for Polyvinylchloride Waterstop

NATIONAL READY-MIXED CONCRETE ASSOCIATION (NRMCA)

NRMCA TMMB-01	Truck Mixer Agitator and Front Discharge Concrete Carrier Standards of the Truck Mixer Manufacturers Bureau
NRMCA QC 3	Quality Control Manual: Section 3, Plant Certifications Checklist: Certification of Ready Mixed Concrete Production Facilities

1.2 LUMP SUM CONTRACT

Under this type of contract concrete items will be paid for by lump sum and will not be measured. The work covered by these items consists of furnishing all concrete materials, reinforcement, miscellaneous embedded materials, and equipment, and performing all labor for the forming, manufacture, transporting, placing, finishing, curing, and protection of concrete in these structures.

1.3 SUBMITTALS

Government approval is required for submittals with a "GA" designation; submittals having an "FIO" designation are for information only. The

following shall be submitted in accordance with Section 01330 SUBMITTAL PROCEDURES:

SD-08 Statements

Mixture Proportions; GA.

The results of trial mixture design studies along with a statement giving the maximum nominal coarse aggregate size and the proportions of ingredients that will be used in the manufacture of each strength or class of concrete, at least 14 days prior to commencing concrete placing operations. Aggregate weights shall be based on the saturated surface dry condition. The statement shall be accompanied by test results from an approved independent commercial testing laboratory, showing that mixture design studies have been made with materials proposed for the project and that the proportions selected will produce concrete of the qualities indicated. The test results shall be less than 6 months old. No substitutions shall be made in the materials used in the mixture design studies without additional tests to show that the quality of the concrete is satisfactory.

SD-09 Reports

Testing and Inspection for Contractor Quality Control; GA.

Certified copies of laboratory test reports, including mill tests and all other test data, for portland cement, blended cement, pozzolan, ground granulated blast furnace slag, silica fume, aggregate, admixtures, and curing compound proposed for use on this project.

SD-13 Certificates

Qualifications; FIO;AR.

Written documentation for Contractor Quality Control personnel.

SD-14 Samples

Surface Retarder; GA|AR.

Surface retarder material with manufacturer's instructions for application in conjunction with air-water cutting.

1.4 QUALIFICATIONS

Contractor Quality Control personnel assigned to concrete construction shall be American Concrete Institute (ACI) Certified Workmen in one of the following grades or shall have written evidence of having completed similar qualification programs:

Concrete Field Testing Technician, Grade I
Concrete Laboratory Testing Technician, Grade I or II
Concrete Construction Inspector, Level II

The foreman or lead journeyman of the flatwork finishing crew shall have similar qualification for ACI Concrete Flatwork Technician/Finisher or equal, with written documentation.

1.5 SPECIAL REQUIREMENTS

A pre-installation meeting with the Contracting Officer will be required at least 10 days prior to start of construction. The Contractor shall be responsible for calling the meeting; the Project Superintendent and active installation personnel shall be present.

1.6 GENERAL REQUIREMENTS

1.6.1 Tolerances

Except as otherwise specified herein, tolerances for concrete batching, mixture properties, and construction as well as definition of terms and application practices shall be in accordance with ACI 117/117R. Level and grade tolerance measurements of slabs shall be made as soon as possible after finishing; when forms or shoring are used, the measurements shall be made prior to removal.

1.6.1.1 Floors

For the purpose of this Section the following terminology correlation between ACI 117/117R and this Section shall apply:

Floor Profile Quality Classification From ACI 117/117R	This Section
Conventional Bullfloated	Same
Conventional Straightedged	Same
Flat	Float Finish or Trowel Finish

Levelness tolerance shall not apply where design requires floors to be sloped to drains or sloped for other reasons.

1.6.1.2 Floors by the F-Number System

The flatness and levelness of floors shall be carefully controlled and the tolerances shall be measured by the F-Number system of Paragraph 4.5.6 and 4.5.6.1 of ACI 117/117R. The Contractor shall furnish an approved floor profilograph or other equipment capable of measuring the floor flatness (FF) number and the floor levelness (FL) number in accordance with ASTM E 1155. The Contractor shall perform the tolerance measurements within 72 hours after floor slab construction while being observed by the Contracting Officer. The tolerances of surfaces beyond the limits of ASTM E 1155 (the areas within 600 mm of embedments and construction joints) shall be acceptable to the Contracting Officer. Tolerances of the following areas shall meet the requirements for the listed surfaces as specified in paragraphs 4.5.6 and 4.5.6.1 of ACI 117/117R.

Trowel Finish-

A. All Interior Floors Not Subjected To Forklift Traffic -
Specified Overall Values (SOV) = FF25 FL25
Minimum Local Values (MLV) = FF17 FL15

B. All Interior Pavements Subjected to Forklift Traffic
(Including Exterior Loading Dock) -
Specified Overall Values (SOV) = FF36 FL25
Minimum Local Values (MLV) = FF24 FL17

1.6.2 Strength Requirements and w/c Ratio

1.6.2.1 Strength Requirements

Specified compressive strength (f'c) shall be as follows:

COMPRESSIVE STRENGTH	STRUCTURE OR PORTION OF STRUCTURE
27.5 MPa at 28 days	All Concrete

Concrete made with high-early strength cement shall have a 7-day strength equal to the specified 28-day strength for concrete made with Type I or II portland cement. Compressive strength shall be determined in accordance with ASTM C 39.

a. Evaluation of Concrete Compressive Strength. Compressive strength specimens (152 by 305 mm cylinders) shall be fabricated by the Contractor and laboratory cured in accordance with ASTM C 31 and tested in accordance with ASTM C 39. The strength of the concrete will be considered satisfactory so long as the average of all sets of three consecutive test results equals or exceeds the specified compressive strength f'c and no individual test result falls below the specified strength f'c by more than 3.5 MPa. A "test" is defined as the average of two companion cylinders, or if only one cylinder is tested, the results of the single cylinder test. Additional analysis or testing, including taking cores and/or load tests may be required at the Contractor's expense when the strength of the concrete in the structure is considered potentially deficient.

b. Investigation of Low-Strength Compressive Test Results. When any strength test of standard-cured test cylinders falls below the specified strength requirement by more than 3.5 MPa or if tests of field-cured cylinders indicate deficiencies in protection and curing, steps shall be taken to assure that the load-carrying capacity of the structure is not jeopardized. When the strength of concrete in place is considered potentially deficient, cores shall be obtained and tested in accordance with ASTM C 42. At least three representative cores shall be taken from each member or area of concrete in place that is considered potentially deficient. The location of cores will be determined by the Contracting Officer to least impair the strength of the structure. Concrete in the area represented by the core testing will be considered adequate if the average strength of the cores is equal to at least 85 percent of the specified strength requirement and if no single core is less than 75 percent of the specified strength requirement. Non-destructive tests (tests other than test cylinders or cores) shall not be used as a basis for acceptance or rejection. The Contractor shall perform the coring, test the cores, and repair the holes unless otherwise indicated by the Contracting Officer.

c. Load Tests. If the core tests are inconclusive or impractical to obtain or if structural analysis does not confirm the safety of the structure, load tests may be directed by the Contracting Officer in accordance with the requirements of ACI 318/318R. Concrete work evaluated by structural analysis or by results of a load test as being under strength shall be corrected in a manner satisfactory to the Contracting Officer. All investigations, testing, load tests, and correction of deficiencies shall be performed by and at the expense of the Contractor and must be

approved by the Contracting Officer, except that if all concrete is found to be in compliance with the drawings and specifications, the cost of investigations, testing, and load tests will be at the expense of the Government.

1.6.2.2 Water-Cement Ratio

Maximum water-cement ratio (w/c) for normal weight concrete shall be as follows:

WATER-CEMENT RATIO, BY WEIGHT	STRUCTURE OR PORTION OF STRUCTURE
0.45	All Concrete

These w/c's may cause higher strengths than that required above for compressive or flexural strength. The maximum w/c required will be the equivalent w/c as determined by conversion from the weight ratio of water to cement plus pozzolan, silica fume, and ground granulated blast furnace slag (GGBF slag) by the weight equivalency method as described in ACI 211.1. In the case where silica fume or GGBF slag is used, the weight of the silica fume and GGBF slag shall be included in the equations of ACI 211.1 for the term P which is used to denote the weight of pozzolan.

1.6.3 Air Entrainment

All normal weight concrete shall be air entrained to contain between 5 and 7 percent total air, except that when the nominal maximum size coarse aggregate is 19 mm or smaller it shall be between 5.5 and 7.5 percent. Concrete with specified strength over 35 MPa may have 1.0 percent less air than specified above. Specified air content shall be attained at point of placement into the forms. Air content for normal weight concrete shall be determined in accordance with ASTM C 231.

1.6.4 Slump

Slump of the concrete, as delivered to the point of placement into the forms, shall be within the following limits. Slump shall be determined in accordance with ASTM C 143.

Structural Element	Slump Minimum	Slump Maximum
a. Walls, columns and beams	50 mm	100 mm
b. Foundation walls, substructure walls, footings, slabs	25 mm	75 mm

When use of a plasticizing admixture conforming to ASTM C 1017 or when a Type F or G high range water reducing admixture conforming to ASTM C 494 is permitted to increase the slump of concrete, concrete shall have a slump in accordance with above items a and b before the admixture is added and a maximum slump of 200 mm at the point of delivery after the admixture is added.

1.6.5 Concrete Temperature

The temperature of the concrete as delivered shall not exceed 32 degrees C. When the ambient temperature during placing is 5 degrees C or less, or

is expected to be at any time within 6 hours after placing, the temperature of the concrete as delivered shall be between 12 and 25 degrees C.

1.6.6 Size of Coarse Aggregate

The largest feasible nominal maximum size aggregate (NMSA) specified in paragraph AGGREGATES shall be used in each placement. However, nominal maximum size of aggregate shall not exceed any of the following: three-fourths of the minimum cover for reinforcing bars, three-fourths of the minimum clear spacing between reinforcing bars, one-fifth of the narrowest dimension between sides of forms, or one-third of the thickness of slabs or toppings.

1.6.7 Special Properties and Products

Concrete may contain admixtures other than air entraining agents, such as water reducers, superplasticizers, or set retarding agents to provide special properties to the concrete, if specified or approved. Any of these materials to be used on the project shall be used in the mix design studies.

1.6.8 Technical Service for Specialized Concrete

The services of a factory trained technical representative shall be obtained to oversee proportioning, batching, mixing, placing, consolidating, and finishing of specialized structural concrete, such as flowing concrete. The technical representative shall be on the job full time until the Contracting Officer is satisfied that field controls indicate concrete of specified quality is furnished and that the Contractor's crews are capable of continued satisfactory work. The technical representative shall be available for consultation with, and advice to, Government forces.

1.7 MIXTURE PROPORTIONS

Concrete shall be composed of portland cement, other cementitious and pozzolanic materials as specified, aggregates, water and admixtures as specified.

1.7.1 Proportioning Studies for Normal Weight Concrete

Trial design batches, mixture proportioning studies, and testing requirements for various classes and types of concrete specified shall be the responsibility of the Contractor. Mixture proportions shall be based on compressive strength as determined by test specimens fabricated in accordance with ASTM C 192 and tested in accordance with ASTM C 39. Samples of all materials used in mixture proportioning studies shall be representative of those proposed for use in the project and shall be accompanied by the manufacturer's or producer's test reports indicating compliance with these specifications. Trial mixtures having proportions, consistencies, and air content suitable for the work shall be made based on methodology described in ACI 211.1, using at least three different water-cement ratios for each type of mixture, which will produce a range of strength encompassing those required for each class and type of concrete required on the project. The maximum water-cement ratios required in the paragraph Maximum Allowable w/c Ratio will be the equivalent water-cement ratio as determined by conversion from the weight ratio of water to cement plus pozzolan, and ground granulated blast furnace slag (GGBF slag) by the weight equivalency method as described in ACI 211.1. In the case where GGBF slag is used, the weight of the GGBF slag shall be included in the

equations in ACI 211.1 for the term P, which is used to denote the weight of pozzolan. If pozzolan is used in the concrete mixture, the minimum pozzolan content shall be 15 percent by weight of the total cementitious material, and the maximum shall be 35 percent. Laboratory trial mixtures shall be designed for maximum permitted slump and air content. Separate sets of trial mixture studies shall be made for each combination of cementitious materials and each combination of admixtures proposed for use. No combination of either shall be used until proven by such studies, except that, if approved in writing and otherwise permitted by these specifications, an accelerator or a retarder may be used without separate trial mixture study. Separate trial mixture studies shall also be made for concrete for any conveying or placing method proposed which requires special properties and for concrete to be placed in unusually difficult placing locations. The temperature of concrete in each trial batch shall be reported. For each water-cement ratio, at least three test cylinders for each test age shall be made and cured in accordance with ASTM C 192. They shall be tested at 7 and 28 days in accordance with ASTM C 39. From these test results, a curve shall be plotted showing the relationship between water-cement ratio and strength for each set of trial mix studies. In addition, a curve shall be plotted showing the relationship between 7 day and 28 day strengths. Each mixture shall be designed to promote easy and suitable concrete placement, consolidation and finishing, and to prevent segregation and excessive bleeding.

1.7.2 Average Compressive Strength Required for Mixtures

The mixture proportions selected during mixture design studies shall produce a required average compressive strength (f'cr) exceeding the specified compressive strength (f'c) by the amount indicated below. This required average compressive strength, f'cr, will not be a required acceptance criteria during concrete production. However, whenever the daily average compressive strength at 28 days drops below f'cr during concrete production, or daily average 7-day strength drops below a strength correlated with the 28-day f'cr, the mixture shall be adjusted, as approved, to bring the daily average back up to f'cr. During production, the required f'cr shall be adjusted, as appropriate, based on the standard deviation being attained on the job.

1.7.2.1 Computations from Test Records

Where a concrete production facility has test records, a standard deviation shall be established in accordance with the applicable provisions of ACI 214.3R. Test records from which a standard deviation is calculated shall represent materials, quality control procedures, and conditions similar to those expected; shall represent concrete produced to meet a specified strength or strengths (f'c) within 7 MPa of that specified for proposed work; and shall consist of at least 30 consecutive tests. A strength test shall be the average of the strengths of two cylinders made from the same sample of concrete and tested at 28 days. Required average compressive strength f'cr used as the basis for selection of concrete proportions shall be the larger of the equations that follow using the standard deviation as determined above:

$f'cr = f'c + 1.34S$ where units are in MPa

$f'cr = f'c + 2.33S - 3.45$ where units are in MPa

Where S = standard deviation

Where a concrete production facility does not have test records meeting the requirements above but does have a record based on 15 to 29 consecutive tests, a standard deviation shall be established as the product of the calculated standard deviation and a modification factor from the following table:

NUMBER OF TESTS	MODIFICATION FACTOR FOR STANDARD DEVIATION
15	1.16
20	1.08
25	1.03
30 or more	1.00

1.7.2.2 Computations without Previous Test Records

When a concrete production facility does not have sufficient field strength test records for calculation of the standard deviation, the required average strength f'cr shall be determined as follows:

a. If the specified compressive strength f'c is less than 20 MPa,

f'cr = f'c + 6.9 MPa

b. If the specified compressive strength f'c is 20 to 35 MPa,

f'cr = f'c + 8.3 MPa

c. If the specified compressive strength f'c is over 35 MPa,

f'cr = f'c + 9.7 MPa

1.8 STORAGE OF MATERIALS

Cement and other cementitious materials shall be stored in weathertight buildings, bins, or silos which will exclude moisture and contaminants and keep each material completely separated. Aggregate stockpiles shall be arranged and used in a manner to avoid excessive segregation and to prevent contamination with other materials or with other sizes of aggregates. Aggregate shall not be stored directly on ground unless a sacrificial layer is left undisturbed. Reinforcing bars and accessories shall be stored above the ground on platforms, skids or other supports. Other materials shall be stored in such a manner as to avoid contamination and deterioration. Admixtures which have been in storage at the project site for longer than 6 months or which have been subjected to freezing shall not be used unless retested and proven to meet the specified requirements. Materials shall be capable of being accurately identified after bundles or containers are opened.

1.9 GOVERNMENT ASSURANCE INSPECTION AND TESTING

Day-to day inspection and testing shall be the responsibility of the Contractor Quality Control (CQC) staff. However, representatives of the Contracting Officer can and will inspect construction as considered appropriate and will monitor operations of the Contractor's CQC staff. Government inspection or testing will not relieve the Contractor of any of his CQC responsibilities.

1.9.1 Materials

The Government will sample and test aggregates, cementitious materials, other materials, and concrete to determine compliance with the specifications as considered appropriate. The Contractor shall provide facilities and labor as may be necessary for procurement of representative test samples. Samples of aggregates will be obtained at the point of batching in accordance with ASTM D 75. Other materials will be sampled from storage at the jobsite or from other locations as considered appropriate. Samples may be placed in storage for later testing when appropriate.

1.9.2 Fresh Concrete

Fresh concrete will be sampled as delivered in accordance with ASTM C 172 and tested in accordance with these specifications, as considered necessary.

1.9.3 Hardened Concrete

Tests on hardened concrete will be performed by the Government when such tests are considered necessary.

1.9.4 Inspection

Concrete operations may be tested and inspected by the Government as the project progresses. Failure to detect defective work or material will not prevent rejection later when a defect is discovered nor will it obligate the Government for final acceptance.

PART 2 PRODUCTS

2.1 CEMENTITIOUS MATERIALS

Cementitious Materials shall be portland cement or portland cement in combination with pozzolan or ground granulated blast furnace slag and shall conform to appropriate specifications listed below. Use of cementitious materials in concrete which will have surfaces exposed in the completed structure shall be restricted so there is no change in color, source, or type of cementitious material.

2.1.1 Portland Cement

ASTM C 150, Type I low alkali with a maximum 15 percent amount of tricalcium aluminate, or Type II [low alkali] . White portland cement shall meet the above requirements except that it may be Type I, Type II or Type III low alkali. White Type III shall be used only in specific areas of the structure, when approved in writing.

2.1.2 High-Early-Strength Portland Cement

ASTM C 150, Type III with tricalcium aluminate limited to 5 percent, low alkali. Type III cement shall be used only in isolated instances and only when approved in writing.

2.1.3 Pozzolan (Fly Ash)

ASTM C 618, Class C or F with the optional requirements for multiple factor, drying shrinkage, and uniformity from Table 2A of ASTM C 618. Requirement for maximum alkalies from Table 1A of ASTM C 618 shall apply. If pozzolan is used, it shall never be less than 15 percent nor more than

35 percent by weight of the total cementitious material.

2.1.4 Ground Granulated Blast-Furnace (GGBF) Slag

ASTM C 989, Grade 120. If GGBF is used, it shall not exceed more than 50 percent by weight of the total cementitous material.

2.2 AGGREGATES

Aggregates shall conform to the following.

2.2.1 Fine Aggregate

Fine aggregate shall conform to the quality and gradation requirements of ASTM C 33.

2.2.2 Coarse Aggregate

Coarse aggregate shall conform to ASTM C 33, Class 5S, size designation #57.

2.3 CHEMICAL ADMIXTURES

Chemical admixtures, when required or permitted, shall conform to the appropriate specification listed. Admixtures shall be furnished in liquid form and of suitable concentration for easy, accurate control of dispensing.

2.3.1 Air-Entraining Admixture

ASTM C 260 and shall consistently entrain the air content in the specified ranges under field conditions.

2.3.2 Accelerating Admixture

ASTM C 494, Type C or E, except that calcium chloride or admixtures containing calcium chloride shall not be used.

2.3.3 Water-Reducing or Retarding Admixture

ASTM C 494, Type A, B, or D, except that the 6-month and 1-year compressive and flexural strength tests are waived.

2.3.4 High-Range Water Reducer

ASTM C 494, Type F or G, except that the 6-month and 1-year strength requirements are waived. The admixture shall be used only when approved in writing, such approval being contingent upon particular mixture control as described in the Contractor's Quality Control Plan and upon performance of separate mixture design studies.

2.3.5 Surface Retarder

COE CRD-C 94.

2.3.6 Other Chemical Admixtures

Chemical admixtures for use in producing flowing concrete shall comply with ASTM C 1017, Type I or II. These admixtures shall be used only when approved in writing, such approval being contingent upon particular mixture control as described in the Contractor's Quality Control Plan and upon

performance of separate mixture design studies.

2.4 CURING MATERIALS

2.4.1 Impervious-Sheet

Impervious-sheet materials shall conform to ASTM C 171, type optional, except, that polyethylene sheet shall not be used.

2.4.2 Membrane-Forming Compound

Membrane-Forming curing compound shall conform to ASTM C 309, Type 1-D or 2, except that only a styrene acrylate or chlorinated rubber compound meeting Class B requirements shall be used for surfaces that are to be painted or are to receive bituminous roofing, or waterproofing, or floors that are to receive adhesive applications of resilient flooring. The curing compound selected shall be compatible with any subsequent paint, roofing, waterproofing, or flooring specified. Nonpigmented compound shall contain a fugitive dye, and shall have the reflective requirements in ASTM C 309 waived.

2.4.3 Burlap and Cotton Mat

Burlap and cotton mat used for curing shall conform to AASHTO M 182.

2.5 WATER

Water for mixing and curing shall be fresh, clean, potable, and free of injurious amounts of oil, acid, salt, or alkali, except that non-potable water may be used if it meets the requirements of COE CRD-C 400.

2.6 NONSHRINK GROUT

Nonshrink grout shall conform to ASTM C 1107, Grade A and shall be a commercial formulation suitable for the proposed application.

2.7 NONSLIP SURFACING MATERIAL

Nonslip surfacing material shall consist of 55 percent, minimum, aluminum oxide or silicon-dioxide abrasive ceramically bonded together to form a homogeneous material sufficiently porous to provide a good bond with portland cement paste; or factory-graded emery aggregate consisting of not less than 45 percent aluminum oxide and 25 percent ferric oxide. The aggregate shall be well graded from particles retained on the 0.6 mm sieve to particles passing the 2.36 mm sieve.

2.8 LATEX BONDING AGENT

Latex agents for bonding fresh to hardened concrete shall conform to ASTM C 1059.

2.9 EPOXY RESIN

Epoxy resins for use in repairs shall conform to ASTM C 881, Type V, Grade 2. Class as appropriate to the existing ambient and surface temperatures.

2.10 EMBEDDED ITEMS

Embedded items shall be of the size and type indicated or as needed for the

application. Dovetail slots shall be galvanized steel. Hangers for suspended ceilings shall be as specified in Section 09510 ACOUSTICAL CEILINGS. Inserts for shelf angles and bolt hangers shall be of malleable iron or cast or wrought steel.

2.11 FLOOR HARDENER

Floor hardener shall be a colorless aqueous solution containing zinc silicofluoride, magnesium silicofluoride, or sodium silicofluoride. These silicofluorides can be used individually or in combination. Proprietary hardeners may be used if approved in writing by the Contracting Officer.

2.12 PERIMETER INSULATION

Perimeter insulation shall be polystyrene conforming to ASTM C 578, Type II; polyurethane conforming to ASTM C 591, Type II; or cellular glass conforming to ASTM C 552, Type I or IV.

2.13 VAPOR BARRIER

Vapor barrier shall be polyethylene sheeting with a minimum thickness of 0.15 mm (6 mils) or other equivalent material having a vapor permeance rating not exceeding 30 nanograms per Pascal per second per square meter (0.5 perms) as determined in accordance with ASTM E 96.

2.14 JOINT MATERIALS

2.14.1 Joint Fillers and Sealers

Expansion joint fillers shall be preformed materials conforming to ASTM D 1751. Materials for and sealing of joints shall conform to the requirements of Section 07900 JOINT SEALING.

2.14.2 Contraction Joints in Slabs

Sawable type contraction joint inserts shall conform to COE CRD-C 540. Nonsawable joint inserts shall have sufficient stiffness to permit placement in plastic concrete without undue deviation from a straight line and shall conform to the physical requirements of COE CRD-C 540, with the exception of Section 3.4 "Resistance to Sawing". Plastic inserts shall be polyvinyl chloride conforming to the materials requirements of COE CRD-C 572.

PART 3 EXECUTION

3.1 PREPARATION FOR PLACING

Before commencing concrete placement, the following shall be performed. Surfaces to receive concrete shall be clean and free from frost, ice, mud, and water. Forms shall be in place, cleaned, coated, and adequately supported, in accordance with Section 03100 STRUCTURAL CONCRETE FORMWORK. Reinforcing steel shall be in place, cleaned, tied, and adequately supported, in accordance with Section 03200 CONCRETE REINFORCEMENT. Transporting and conveying equipment shall be in-place, ready for use, clean, and free of hardened concrete and foreign material. Equipment for consolidating concrete shall be at the placing site and in proper working order. Equipment and material for curing and for protecting concrete from weather or mechanical damage shall be at the placing site, in proper working condition and in sufficient amount for the entire placement. When hot, windy conditions during concreting appear probable, equipment and

material shall be at the placing site to provide windbreaks, shading, fogging, or other action to prevent plastic shrinkage cracking or other damaging drying of the concrete.

3.1.1 Foundations

3.1.1.1 Concrete on Earth Foundations

Earth (subgrade, base, or subbase courses) surfaces upon which concrete is to be placed shall be clean, damp, and free from debris, frost, ice, and standing or running water. Prior to placement of concrete, the earth shall be well drained and shall be satisfactorily graded and uniformly compacted (except that soils beneath foundations shall not be compacted).

3.1.1.2 Excavated Surfaces in Lieu of Forms

Concrete for footings may be placed directly against the soil provided the earth has been carefully trimmed, is uniform and stable, and meets the compaction requirements of Section 02221EXCAVATION, FILLING, AND BACKFILLING FOR BUILDINGS. The concrete shall be placed without becoming contaminated by loose material, and the outline of the concrete shall be within the specified tolerances.

3.1.2 Previously Placed Concrete

Concrete surfaces to which additional concrete is to be bonded shall be prepared for receiving the next horizontal lift by cleaning the construction joint surface with either air-water cutting, sandblasting, high-pressure water jet, or other approved method. Concrete at the side of vertical construction joints shall be prepared as approved by the Contracting Officer. Air-water cutting shall not be used on formed surfaces or surfaces congested with reinforcing steel. Regardless of the method used, the resulting surfaces shall be free from all laitance and inferior concrete so that clean surfaces of well bonded coarse aggregate are exposed and make up at least 10-percent of the surface area, distributed uniformly throughout the surface. The edges of the coarse aggregate shall not be undercut. The surface of horizontal construction joints shall be kept continuously wet for the first 12 hours during the 24-hour period prior to placing fresh concrete. The surface shall be washed completely clean as the last operation prior to placing the next lift. When bonding to existing concrete, a grout of cement and water shall be scrubbed with a brush into the surfaces to which the new material is to be bonded (after cleaning as discussed above). The area shall be damp but without free water when the grout is applied. As an alternative to the grout, a 10- to 20- mil thick film of epoxy resin grout may be applied to the cleaned existing concrete. The epoxy resin shall conform to paragraph 2.9 EPOXY RESIN and be placed in strict accordance with the manufacturers instructions.

3.1.2.1 Air-Water Cutting

Air-water cutting of a fresh concrete surface shall be performed at the proper time and only on horizontal construction joints. The air pressure used in the jet shall be 700 kPa plus or minus, 70 kPa, and the water pressure shall be just sufficient to bring the water into effective influence of the air pressure. When approved by the Contracting Officer, a surface retarder complying with the requirements of COE CRD-C 94 may be applied to the surface of the lift in order to prolong the period of time during which air-water cutting is effective. After cutting, the surface

shall be washed and rinsed as long as there is any trace of cloudiness of the wash water. Where necessary to remove accumulated laitance, coatings, stains, debris, and other foreign material, high-pressure waterjet or sandblasting shall be used as the last operation before placing the next lift.

3.1.2.2 High-Pressure Water Jet

A stream of water under a pressure of not less than 20 MPa shall be used for cutting and cleaning. Its use shall be delayed until the concrete is sufficiently hard so that only the surface skin or mortar is removed and there is no undercutting of coarse-aggregate particles. If the waterjet is incapable of a satisfactory cleaning, the surface shall be cleaned by sandblasting.

3.1.2.3 Wet Sandblasting

Wet sandblasting shall be used after the concrete has reached sufficient strength to prevent undercutting of the coarse aggregate particles. After wet sandblasting, the surface of the concrete shall then be washed thoroughly to remove all loose materials.

3.1.2.4 Waste Disposal

The method used in disposing of waste water employed in cutting, washing, and rinsing of concrete surfaces shall be such that the waste water does not stain, discolor, or affect exposed surfaces of the structures, or damage the environment of the project area. The method of disposal shall be subject to approval.

3.1.2.5 Preparation of Previously Placed Concrete

Concrete surfaces to which other concrete is to be bonded shall be abraded in an approved manner that will expose sound aggregate uniformly without damaging the concrete. Laitance and loose particles shall be removed. Surfaces shall be thoroughly washed and shall be moist but without free water when concrete is placed.

3.1.3 Vapor Barrier

Vapor barrier shall be provided beneath the interior on-grade concrete floor slabs. The greatest widths and lengths practicable shall be used to eliminate joints wherever possible. Joints shall be lapped a minimum of 300 mm. Torn, punctured, or damaged vapor barrier material shall be removed and new vapor barrier shall be provided prior to placing concrete. For minor repairs, patches may be made using laps of at least 300 mm. Lapped joints shall be sealed and edges patched with pressure-sensitive adhesive or tape not less than 50 mm wide and compatible with the membrane. Vapor barrier shall be placed directly on underlying subgrade, base course, or capillary water barrier, unless it consists of crushed material or large granular material which could puncture the vapor barrier. In this case, the surface shall be choked with a light layer of sand, as approved, before placing the vapor barrier. A 50 mm layer of compacted, clean concrete sand (fine aggregate) shall be placed on top of the vapor barrier before placing concrete. Concrete placement shall be controlled so as to prevent damage to the vapor barrier, or any covering sand.

3.1.4 Perimeter Insulation

Perimeter insulation shall be installed at locations indicated. Adhesive shall be used where insulation is applied to the interior surface of foundation walls and may be used for exterior application.

3.1.5 Embedded Items

Before placement of concrete, care shall be taken to determine that all embedded items are firmly and securely fastened in place as indicated on the drawings, or required. Conduit and other embedded items shall be clean and free of oil and other foreign matter such as loose coatings or rust, paint, and scale. The embedding of wood in concrete will be permitted only when specifically authorized or directed. Voids in sleeves, inserts, and anchor slots shall be filled temporarily with readily removable materials to prevent the entry of concrete into voids. Welding shall not be performed on embedded metals within 300 mm of the surface of the concrete. Tack welding shall not be performed on or to embedded items.

3.2 CONCRETE PRODUCTION

3.2.1 Batching, Mixing, and Transporting Concrete

Concrete shall be furnished from a ready-mixed concrete plant. Ready-mixed concrete shall be batched, mixed, and transported in accordance with ASTM C 94, except as otherwise specified. Truck mixers, agitators, and nonagitating transporting units shall comply with NRMCA TMMB-01. Ready-mix plant equipment and facilities shall be certified in accordance with NRMCA QC 3. Approved batch tickets shall be furnished for each load of ready-mixed concrete.

3.3 TRANSPORTING CONCRETE TO PROJECT SITE

Concrete shall be transported to the placing site in truck mixers.

3.4 CONVEYING CONCRETE ON SITE

Concrete shall be conveyed from mixer or transporting unit to forms as rapidly as possible and within the time interval specified by methods which will prevent segregation or loss of ingredients using following equipment. Conveying equipment shall be cleaned before each placement.

3.4.1 Buckets

The interior hopper slope shall be not less than 58 degrees from the horizontal, the minimum dimension of the clear gate opening shall be at least 5 times the nominal maximum-size aggregate, and the area of the gate opening shall not be less than 0.2 square meters. The maximum dimension of the gate opening shall not be greater than twice the minimum dimension. The bucket gates shall be essentially grout tight when closed and may be manually, pneumatically, or hydraulically operated except that buckets larger than 1.5 cubic meters shall not be manually operated. The design of the bucket shall provide means for positive regulation of the amount and rate of deposit of concrete in each dumping position.

3.4.2 Transfer Hoppers

Concrete may be charged into nonagitating hoppers for transfer to other conveying devices. Transfer hoppers shall be capable of receiving concrete directly from delivery vehicles and shall have conical-shaped discharge features. The transfer hopper shall be equipped with a hydraulically

operated gate and with a means of external vibration to effect complete discharge. Concrete shall not be held in nonagitating transfer hoppers more than 30 minutes.

3.4.3 Trucks

Truck mixers operating at agitating speed or truck agitators used for transporting plant-mixed concrete shall conform to the requirements of ASTM C 94. Nonagitating equipment shall be used only for transporting plant-mixed concrete over a smooth road and when the hauling time is less than 15 minutes. Bodies of nonagitating equipment shall be smooth, watertight, metal containers specifically designed to transport concrete, shaped with rounded corners to minimize segregation, and equipped with gates that will permit positive control of the discharge of the concrete.

3.4.4 Chutes

When concrete can be placed directly from a truck mixer, agitator, or nonagitating equipment, the chutes normally attached to this equipment by the manufacturer may be used. A discharge deflector shall be used when required by the Contracting Officer. Separate chutes and other similar equipment will not be permitted for conveying concrete.

3.4.5 Belt Conveyors

Belt conveyors shall be designed and operated to assure a uniform flow of concrete from mixer to final place of deposit without segregation of ingredients or loss of mortar and shall be provided with positive means, such as discharge baffle or hopper , for preventing segregation of the concrete at the transfer points and the point of placing. Belt conveyors shall be constructed such that the idler spacing shall not exceed 900 mm. The belt speed shall be a minimum of 90 meters per minute and a maximum of 225 meters per minute. If concrete is to be placed through installed horizontal or sloping reinforcing bars, the conveyor shall discharge concrete into a pipe or elephant truck that is long enough to extend through the reinforcing bars.

3.4.6 Concrete Pumps

Concrete may be conveyed by positive displacement pump when approved. The pumping equipment shall be piston or squeeze pressure type; pneumatic placing equipment shall not be used. The pipeline shall be rigid steel pipe or heavy-duty flexible hose. The inside diameter of the pipe shall be at least 3 times the nominal maximum-size coarse aggregate in the concrete mixture to be pumped but not less than 100 mm. Aluminum pipe shall not be used.

3.5 PLACING CONCRETE

Mixed concrete shall be discharged within 1-1/2 hours or before the mixer drum has revolved 300 revolutions, whichever comes first after the introduction of the mixing water to the cement and aggregates. When the concrete temperature exceeds 30 degrees C, the time shall be reduced to 45 minutes. Concrete shall be placed within 15 minutes after it has been discharged from the transporting unit. Concrete shall be handled from mixer or transporting unit to forms in a continuous manner until the approved unit of operation is completed. Adequate scaffolding, ramps and walkways shall be provided so that personnel and equipment are not supported by in-place reinforcement. Placing will not be permitted when

the sun, heat, wind, or limitations of facilities furnished by the Contractor prevent proper consolidation, finishing and curing. Sufficient placing capacity shall be provided so that concrete can be kept free of cold joints.

3.5.1 Depositing Concrete

Concrete shall be deposited as close as possible to its final position in the forms, and there shall be no vertical drop greater than 1.5 meters except where suitable equipment is provided to prevent segregation and where specifically authorized. Depositing of the concrete shall be so regulated that it will be effectively consolidated in horizontal layers not more than 300 mm thick, except that all slabs shall be placed in a single layer. Concrete to receive other construction shall be screeded to the proper level. Concrete shall be deposited continuously in one layer or in layers so that fresh concrete is deposited on in-place concrete that is still plastic. Fresh concrete shall not be deposited on concrete that has hardened sufficiently to cause formation of seams or planes of weakness within the section. Concrete that has surface dried, partially hardened, or contains foreign material shall not be used. When temporary spreaders are used in the forms, the spreaders shall be removed as their service becomes unnecessary. Concrete shall not be placed in slabs over columns and walls until concrete in columns and walls has been in-place at least two hours or until the concrete begins to lose its plasticity. Concrete for beams, girders, brackets, column capitals, haunches, and drop panels shall be placed at the same time as concrete for adjoining slabs.

3.5.2 Consolidation

Immediately after placing, each layer of concrete shall be consolidated by internal vibrators, except for slabs 100 mm thick or less. The vibrators shall at all times be adequate in effectiveness and number to properly consolidate the concrete; a spare vibrator shall be kept at the jobsite during all concrete placing operations. The vibrators shall have a frequency of not less than 10,000 vibrations per minute, an amplitude of at least 0.6 mm, and the head diameter shall be appropriate for the structural member and the concrete mixture being placed. Vibrators shall be inserted vertically at uniform spacing over the area of placement. The distance between insertions shall be approximately 1-1/2 times the radius of action of the vibrator so that the area being vibrated will overlap the adjacent just-vibrated area by a reasonable amount. The vibrator shall penetrate rapidly to the bottom of the layer and at least 150 mm into the preceding layer if there is such. Vibrator shall be held stationary until the concrete is consolidated and then vertically withdrawn slowly while operating. Form vibrators shall not be used unless specifically approved and unless forms are constructed to withstand their use. Vibrators shall not be used to move concrete within the forms. Slabs 100 mm and less in thickness shall be consolidated by properly designed vibrating screeds or other approved technique. Frequency and amplitude of vibrators shall be determined in accordance with COE CRD-C 521. Grate tampers ("jitterbugs") shall not be used.

3.5.3 Cold Weather Requirements

Special protection measures, approved by the Contracting Officer, shall be used if freezing temperatures are anticipated before the expiration of the specified curing period. The ambient temperature of the air where concrete is to be placed and the temperature of surfaces to receive concrete shall be not less than 5 degrees C. The temperature of the concrete when placed

shall be not less than 10 degrees C nor more than 25 degrees C. Heating of the mixing water or aggregates will be required to regulate the concrete placing temperature. Materials entering the mixer shall be free from ice, snow, or frozen lumps. Salt, chemicals or other materials shall not be incorporated in the concrete to prevent freezing. Upon written approval, an accelerating admixture conforming to ASTM C 494, Type C or E may be used, provided it contains no calcium chloride. Calcium chloride shall not be used.

3.5.4 Hot Weather Requirements

When the ambient temperature during concrete placing is expected to exceed 30 degrees C, the concrete shall be placed and finished with procedures previously submitted and as specified herein. The concrete temperature at time of delivery to the forms shall not exceed the temperature shown in the table below when measured in accordance with ASTM C 1064. Cooling of the mixing water or aggregates or placing concrete in the cooler part of the day may be required to obtain an adequate placing temperature. A retarder may be used, as approved, to facilitate placing and finishing. Steel forms and reinforcements shall be cooled as approved prior to concrete placement when steel temperatures are greater than 49 degrees C. Conveying and placing equipment shall be cooled if necessary to maintain proper concrete-placing temperature.

Maximum Allowable Concrete Placing Temperature

Relative Humidity, Percent, During Time of Concrete Placement	Maximum Allowable Concrete Temperature Degrees
Greater than 60	33 C
40-60	30 C
Less than 40	27 C

3.5.5 Prevention of Plastic Shrinkage Cracking

During hot weather with low humidity, and particularly with appreciable wind, as well as interior placements when space heaters produce low humidity, the Contractor shall be alert to the tendency for plastic shrinkage cracks to develop and shall institute measures to prevent this. Particular care shall be taken if plastic shrinkage cracking is potentially imminent and especially if it has developed during a previous placement. Periods of high potential for plastic shrinkage cracking can be anticipated by use of Fig. 2.1.5 of ACI 305R. In addition the concrete placement shall be further protected by erecting shades and windbreaks and by applying fog sprays of water, sprinkling, ponding or wet covering. Plastic shrinkage cracks that occur shall be filled by injection of epoxy resin as directed, after the concrete hardens. Plastic shrinkage cracks shall never be troweled over or filled with slurry.

3.5.6 Placing Concrete in Congested Areas

Special care shall be used to ensure complete filling of the forms, elimination of all voids, and complete consolidation of the concrete when placing concrete in areas congested with reinforcing bars, embedded items, waterstops and other tight spacing. An appropriate concrete mixture shall be used, and the nominal maximum size of aggregate (NMSA) shall meet the

specified criteria when evaluated for the congested area. Vibrators with heads of a size appropriate for the clearances available shall be used, and the consolidation operation shall be closely supervised to ensure complete and thorough consolidation at all points. Where necessary, splices of reinforcing bars shall be alternated to reduce congestion. Where two mats of closely spaced reinforcing are required, the bars in each mat shall be placed in matching alignment to reduce congestion. Reinforcing bars may be temporarily crowded to one side during concrete placement provided they are returned to exact required location before concrete placement and consolidation are completed.

3.5.7 Placing Flowable Concrete

If a plasticizing admixture conforming to ASTM C 1017 is used or if a Type F or G high range water reducing admixture is permitted to increase the slump, the concrete shall meet all requirements of paragraph GENERAL REQUIREMENTS in PART 1. Extreme care shall be used in conveying and placing the concrete to avoid segregation. Consolidation and finishing shall meet all requirements of paragraphs Placing Concrete, Finishing Formed Surfaces, and Finishing Unformed Surfaces. No relaxation of requirements to accommodate flowable concrete will be permitted.

3.6 JOINTS [Not including pavement joints]

Joints shall be located and constructed as indicated or approved. Joints in pavement areas shall be as indicated in paragraph PAVEMENTS AND RELATED ITEMS. Joints not indicated on the drawings shall be located and constructed to minimize the impact on the strength of the structure. In general, such joints shall be located near the middle of the spans of supported slabs, beams, and girders unless a beam intersects a girder at this point, in which case the joint in the girder shall be offset a distance equal to twice the width of the beam. Joints in walls and columns shall be at the underside of floors, slabs, beams, or girders and at the tops of footings or floor slabs, unless otherwise approved. Joints shall be perpendicular to the main reinforcement. All reinforcement shall be continued across joints; except that reinforcement or other fixed metal items shall not be continuous through expansion joints, or through construction or contraction joints in slabs on grade. Reinforcement shall be 50 mm clear from each joint. Except where otherwise indicated, construction joints between interior slabs on grade and vertical surfaces shall consist of 1.5 kg per square meter asphalt-saturated felt, extending for the full depth of the slab. The perimeters of the slabs shall be free of fins, rough edges, spalling, or other unsightly appearance. Reservoir for sealant for construction and contraction joints in slabs shall be formed to the dimensions shown on the drawings by removing snap-out joint-forming inserts, by sawing sawable inserts, or by sawing to widen the top portion of sawed joints. Joints to be sealed shall be cleaned and sealed as indicated and in accordance with Section 07900 JOINT SEALING.

3.6.1 Construction Joints

For concrete other than slabs on grade, construction joints shall be located so that the unit of operation does not exceed 6 meters. Concrete shall be placed continuously so that each unit is monolithic in construction. Fresh concrete shall not be placed against adjacent hardened concrete until it is at least 24 hours old. Construction joints shall be located as indicated or approved. Where concrete work is interrupted by weather, end of work shift or other similar type of delay, location and type of construction joint shall be subject to approval of the Contracting

Officer. Unless otherwise indicated and except for slabs on grade, reinforcing steel shall extend through construction joints. Construction joints in slabs on grade shall be keyed or doweled as shown. Concrete columns, walls, or piers shall be in place at least 2 hours, or until the concrete begins to lose its plasticity, before placing concrete for beams, girders, or slabs thereon. In walls having door or window openings, lifts shall terminate at the top and bottom of the opening. Other lifts shall terminate at such levels as to conform to structural requirements or architectural details. Where horizontal construction joints in walls or columns are required, a strip of 25 mm square-edge lumber, bevelled and oiled to facilitate removal, shall be tacked to the inside of the forms at the construction joint. Concrete shall be placed to a point 25 mm above the underside of the strip. The strip shall be removed 1 hour after the concrete has been placed, and any irregularities in the joint line shall be leveled off with a wood float, and all laitance shall be removed. Prior to placing additional concrete, horizontal construction joints shall be prepared as specified in paragraph Previously Placed Concrete.

3.6.2 Contraction Joints in Slabs on Grade

Contraction joints shall be located and detailed as shown on the drawings. Contraction Joints shall be produced by forming a weakened plane in the concrete slab by use of rigid inserts impressed in the concrete during placing operations, use of snap-out plastic joint forming inserts, or sawing a continuous slot with a concrete saw. Regardless of method used to produce the weakened plane, it shall be 1/4 the depth of the slab thickness and between 3 and 5 mm wide unless otherwise indicated on the drawings. For saw-cut joints, cutting shall be timed properly with the set of the concrete. Cutting shall be started as soon as the concrete has hardened sufficiently to prevent ravelling of the edges of the saw cut. Cutting shall be completed before shrinkage stresses become sufficient to produce cracking. Reservoir for joint sealant shall be formed as previously specified.

3.6.3 Expansion Joints

Installation of expansion joints and sealing of these joints shall conform to the requirements of Section 03250 EXPANSION JOINTS, CONTRACTION JOINTS, AND WATERSTOPS and Section 07900 JOINT SEALING.

3.6.4 Dowels

Dowels shall be installed at the locations shown on the drawings and to the details shown, using materials and procedures specified in Section 03200 CONCRETE REINFORCEMENT and herein. Conventional smooth "paving" dowels shall be installed in slabs using approved methods to hold the dowel in place during concreting within a maximum alignment tolerance of 1 mm in 100 mm. "Structural" type deformed bar dowels shall be installed to meet the specified tolerances. Care shall be taken during placing adjacent to and around dowels to ensure there is no displacement of the dowel and that the concrete completely embeds the dowel and is thoroughly consolidated.

3.7 FINISHING FORMED SURFACES

Forms, form materials, and form construction are specified in Section 03100 STRUCTURAL CONCRETE FORMWORK. Finishing of formed surfaces shall be as specified herein. Unless another type of architectural or special finish is specified, surfaces shall be left with the texture imparted by the forms except that defective surfaces shall be repaired. Unless painting of

surfaces is required, uniform color of the concrete shall be maintained by use of only one mixture without changes in materials or proportions for any structure or portion of structure that requires a Class A or B finish. Except for major defects, as defined hereinafter, surface defects shall be repaired as specified herein within 24 hours after forms are removed. Repairs of the so-called "plaster-type" will not be permitted in any location. Tolerances of formed surfaces shall conform to the requirements of ACI 117/117R. These tolerances apply to the finished concrete surface, not to the forms themselves; forms shall be set true to line and grade. Form tie holes requiring repair and other defects whose depth is at least as great as their surface diameter shall be repaired as specified in paragraph Damp-Pack Mortar Repair. Defects whose surface diameter is greater than their depth shall be repaired as specified in paragraph Repair of Major Defects. Repairs shall be finished flush with adjacent surfaces and with the same surface texture. The cement used for all repairs shall be a blend of job cement with white cement proportioned so that the final color after curing and aging will be the same as the adjacent concrete. Concrete with excessive honeycomb, or other defects which affect the strength of the member, will be rejected. Repairs shall be demonstrated to be acceptable and free from cracks or loose or drummy areas at the completion of the contract and, for Class A and B Finishes, shall be inconspicuous. Repairs not meeting these requirements will be rejected and shall be replaced.

3.7.1 Class B Finish

Class B finish is required for all exposed to view surfaces. Fins, ravelings, and loose material shall be removed, all surface defects over 12 mm in diameter or more than 12 mm deep, shall be repaired and, except as otherwise indicated or as specified in Section 03100 STRUCTURAL CONCRETE FORMWORK, holes left by removal of form ties shall be reamed and filled. Defects more than 12 mm in diameter shall be cut back to sound concrete, but in all cases at least 25 mm deep. The Contractor shall prepare a sample panel for approval (as specified in PART 1) before commencing repair, showing that the surface texture and color match will be attained.

3.7.2 Class D Finish

Class D finish is required for all surfaces not exposed to view. Fins, ravelings, and loose material shall be removed, and, except as otherwise indicated or as specified in Section 03100 STRUCTURAL CONCRETE FORMWORK, holes left by removal of form ties shall be reamed and filled. Honeycomb and other defects more than 12 mm deep or more than 50 mm in diameter shall be repaired. Defects more than 50 mm in diameter shall be cut back to sound concrete, but in all cases at least 25 mm deep.

3.8 REPAIRS

3.8.1 Damp-Pack Mortar Repair

Form tie holes requiring repair and other defects whose depth is at least as great as their surface diameter but not over 100 mm shall be repaired by the damp-pack mortar method. Form tie holes shall be reamed and other similar defects shall be cut out to sound concrete. The void shall then be thoroughly cleaned, thoroughly wetted, brush-coated with a thin coat of neat cement grout and filled with mortar. Mortar shall be a stiff mix of 1 part portland cement to 2 parts fine aggregate passing the 1.18 mm sieve, and minimum amount of water. Only sufficient water shall be used to produce a mortar which, when used, will stick together on being molded into

a ball by a slight pressure of the hands and will not exude water but will leave the hands damp. Mortar shall be mixed and allowed to stand for 30 to 45 minutes before use with remixing performed immediately prior to use. Mortar shall be thoroughly tamped in place in thin layers using a hammer and hardwood block. Holes passing entirely through walls shall be completely filled from the inside face by forcing mortar through to the outside face. All holes shall be packed full. Damp-pack repairs shall be moist cured for at least 48 hours.

3.8.2 Repair of Major Defects

Major defects will be considered to be those more than 12 mm deep or, for Class A and B finishes, more than 12 mm in diameter and, for Class C and D finishes, more than 50 mm in diameter. Also included are any defects of any kind whose depth is over 100 mm or whose surface diameter is greater than their depth. Major defects shall be repaired as specified below.

3.8.2.1 Surface Application of Mortar Repair

Defective concrete shall be removed, and removal shall extend into completely sound concrete. Approved equipment and procedures which will not cause cracking or microcracking of the sound concrete shall be used. If reinforcement is encountered, concrete shall be removed so as to expose the reinforcement for at least 50 mm on all sides. All such defective areas greater than 7800 square mm shall be outlined by saw cuts at least 25 mm deep. Defective areas less than 7800 square mm shall be outlined by a 25 mm deep cut with a core drill in lieu of sawing. All saw cuts shall be straight lines in a rectangular pattern in line with the formwork panels. After concrete removal, the surface shall be thoroughly cleaned by high pressure washing to remove all loose material. Surfaces shall be kept continually saturated for the first 12 of the 24 hours immediately before placing mortar and shall be damp but not wet at the time of commencing mortar placement. The Contractor, at his option, may use either hand-placed mortar or mortar placed with a mortar gun. If hand-placed mortar is used, the edges of the cut shall be perpendicular to the surface of the concrete. The prepared area shall be brush-coated with a thin coat of neat cement grout. The repair shall then be made using a stiff mortar, preshrunk by allowing the mixed mortar to stand for 30 to 45 minutes and then remixed, thoroughly tamped into place in thin layers. If hand-placed mortar is used, the Contractor shall test each repair area for drumminess by firm tapping with a hammer and shall inspect for cracks, both in the presence of the Contracting Officer's representative, immediately before completion of the contract, and shall replace any showing drumminess or cracking. If mortar placed with a mortar gun is used, the gun shall be a small compressed air-operated gun to which the mortar is slowly hand fed and which applies the mortar to the surface as a high-pressure stream, as approved. Repairs made using shotcrete equipment will not be accepted. The mortar used shall be the same mortar as specified for damp-pack mortar repair. If gun-placed mortar is used, the edges of the cut shall be beveled toward the center at a slope of 1:1. All surface applied mortar repairs shall be continuously moist cured for at least 7 days. Moist curing shall consist of several layers of saturated burlap applied to the surface immediately after placement is complete and covered with polyethylene sheeting, all held closely in place by a sheet of plywood or similar material rigidly braced against it. Burlap shall be kept continually wet.

3.8.2.2 Repair of Deep and Large Defects

Deep and large defects will be those that are more than 150 mm deep and also have an average diameter at the surface more than 450 mm or that are otherwise so identified by the Project Office. Such defects shall be repaired as specified herein or directed, except that defects which affect the strength of the structure shall not be repaired and that portion of the structure shall be completely removed and replaced. Deep and large defects shall be repaired by procedures approved in advance including forming and placing special concrete using applied pressure during hardening. Preparation of the repair area shall be as specified for surface application of mortar. In addition, the top edge (surface) of the repair area shall be sloped at approximately 20 degrees from the horizontal, upward toward the side from which concrete will be placed. The special concrete shall be a concrete mixture with low water content and low slump, and shall be allowed to age 30 to 60 minutes before use. Concrete containing a specified expanding admixture may be used in lieu of the above mixture; the paste portion of such concrete mixture shall be designed to have an expansion between 2.0 and 4.0 percent when tested in accordance with ASTM C 940. A full width "chimney" shall be provided at the top of the form on the placing side to ensure filling to the top of the opening. A pressure cap shall be used on the concrete in the chimney with simultaneous tightening and revibrating the form during hardening to ensure a tight fit for the repair. The form shall be removed after 24 hours and immediately the chimney shall be carefully chipped away to avoid breaking concrete out of the repair; the surface of the repair concrete shall be dressed as required.

3.9 FINISHING UNFORMED SURFACES

The finish of all unformed surfaces shall meet the requirements of paragraph Tolerances in PART 1, when tested as specified herein.

3.9.1 General

The ambient temperature of spaces adjacent to unformed surfaces being finished and of the base on which concrete will be placed shall be not less than 10 degrees C. In hot weather all requirements of paragraphs Hot Weather Requirements and Prevention of Plastic Shrinkage Cracking shall be met. Unformed surfaces that are not to be covered by additional concrete or backfill shall have a float finish, with additional finishing as specified below, and shall be true to the elevation shown on the drawings. Surfaces to receive additional concrete or backfill shall be brought to the elevation shown on the drawings, properly consolidated, and left true and regular. Unless otherwise shown on the drawings, exterior surfaces shall be sloped for drainage, as directed. Where drains are provided, interior floors shall be evenly sloped to the drains. Joints shall be carefully made with a jointing or edging tool. The finished surfaces shall be protected from stains or abrasions. Grate tampers or "jitterbugs" shall not be used for any surfaces. The dusting of surfaces with dry cement or other materials or the addition of any water during finishing shall not be permitted. If bleed water is present prior to finishing, the excess water shall be carefully dragged off or removed by absorption with porous materials such as burlap. During finishing operations, extreme care shall be taken to prevent over finishing or working water into the surface; this can cause "crazing" (surface shrinkage cracks which appear after hardening) of the surface. Any slabs with surfaces which exhibit significant crazing shall be removed and replaced. During finishing operations, surfaces shall be checked with a 10 foot straightedge, applied in both directions at regular intervals while the concrete is still plastic, to detect high or low areas.

3.9.2 Rough Slab Finish

As a first finishing operation for unformed surfaces and as final finish for slabs to receive mortar setting beds, the surface shall receive a rough slab finish prepared as follows. Areas indicated on the drawings shall receive only a rough slab finish. The concrete shall be uniformly placed across the slab area, consolidated as previously specified, and then screeded with straightedge strikeoffs immediately after consolidation to bring the surface to the required finish level with no coarse aggregate visible. Side forms and screed rails shall be provided, rigidly supported, and set to exact line and grade. Allowable tolerances for finished surfaces apply only to the hardened concrete, not to forms or screed rails. Forms and screed rails shall be set true to line and grade. "Wet screeds" shall not be used.

3.9.3 Floated Finish

Slabs to receive more than a rough slab finish shall next be given a wood float finish. Areas as indicated on the drawings shall be given only a float finish. The screeding shall be followed immediately by darbying or bull floating before bleeding water is present, to bring the surface to a true, even plane. Then, after the concrete has stiffened so that it will withstand a man's weight without imprint of more than 6 mm and the water sheen has disappeared, it shall be floated to a true and even plane free of ridges. Floating shall be performed by use of suitable hand floats or power driven equipment. Sufficient pressure shall be used on the floats to bring a film of moisture to the surface. Hand floats shall be made of wood, magnesium, or aluminum. Care shall be taken to prevent over-finishing or incorporating water into the surface.

3.9.4 Troweled Finish

All interior concrete floors and pavements (including exterior loading dock) shall be given a trowel finish. After floating is complete and after the surface moisture has disappeared, unformed surfaces shall be steel-troweled to a smooth, even, dense finish, free from blemishes including trowel marks. In lieu of hand finishing, an approved power finishing machine may be used in accordance with the directions of the machine manufacturer. Additional trowelings shall be performed, either by hand or machine until the surface has been troweled at least 3 times, with waiting period between each. Care shall be taken to prevent blistering and if such occurs, troweling shall immediately be stopped and operations and surfaces corrected. A final hard steel troweling shall be done by hand, with the trowel tipped, and using hard pressure, when the surface is at a point that the trowel will produce a ringing sound. The finished surface shall be thoroughly consolidated and shall be essentially free of trowel marks and be uniform in texture and appearance. The concrete mixture used for troweled finished areas shall be adjusted, if necessary, in order to provide sufficient fines (cementitious material and fine sand) to finish properly.

3.9.5 Non-Slip Finish

Non-slip floors shall be constructed in accordance with the following subparagraphs.

3.9.5.1 Broomed

The following areas [Exterior concrete pavements, pads, and sidewalks (excluding exterior loading dock)] shall be given a broomed finish. After floating, the surface shall be lightly steel troweled, and then carefully scored by pulling a coarse fiber push-type broom across the surface. Brooming shall be transverse to traffic or at right angles to the slope of the slab. After the end of the curing period, the surface shall be vigorously broomed with a coarse fiber broom to remove all loose or semi-detached particles.

3.10 FLOOR HARDENER

All interior concrete pavements and floors shall be treated with floor hardener. Floor hardener shall be applied after the concrete has been cured and then air dried for 14 days. Three coats shall be applied, each the day after the preceding coat was applied. For the first application, 0.5 kg of the silocofluoride shall be dissolved in 4 liters of water. For subsequent applications, the solution shall be 1.0 kg of silicofluoride to each 4 liters of water. Floor should be mopped with clear water shortly after the preceding application has dried to remove encrusted salts. Proprietary hardeners shall be applied in accordance with the manufacturer's instructions. During application, area should be well ventilated. Precautions shall be taken when applying silicofluorides due to the toxicity of the salts. Any compound that contacts glass or aluminum should be immediately removed with clear water.

3.11 PAVEMENTS AND RELATED ITEMS

3.11.1 Pavements

Pavements shall be constructed where shown on the drawings. After forms are set and underlying material prepared as specified, the concrete shall be placed uniformly throughout the area and thoroughly vibrated. As soon as placed and vibrated, the concrete shall be struck off and screeded to the crown and cross section and to such elevation above grade that when consolidated and finished, the surface of the pavement will be at the required elevation. The entire surface shall be tamped with the strike off, or consolidated with a vibrating screed, and this operation continued until the required compaction and reduction of internal and surface voids are accomplished. Care shall be taken to prevent bringing excess paste to the surface. Immediately following the final consolidation of the surface, the exterior pavement shall be floated longitudinally from bridges resting on the side forms and spanning but not touching the concrete. If necessary, additional concrete shall be placed and screeded, and the float operated until a satisfactory surface has been produced. The floating operation shall be advanced not more than half the length of the float and then continued over the new and previously floated surfaces. After finishing is completed but while the concrete is still plastic, minor irregularities and score marks in the pavement surface shall be eliminated by means of long-handled cutting straightedges. Straightedges shall be 3.75 meters in length and shall be operated from the sides of the pavement and from bridges. A straightedge operated from the side of the pavement shall be equipped with a handle 1 meter longer than one-half the width of the pavement. The surface shall then be tested for trueness with a 3.75 meter straightedge held in successive positions parallel and at right angles to the center line of the pavement, and the whole area covered as necessary to detect variations. The straightedge shall be advanced along the pavement in successive stages of not more than one-half the length of the straightedge. Depressions shall be immediately filled with freshly mixed concrete, struck off, consolidated, and refinished. Projections

above the required elevation shall also be struck off and refinished. The straightedge testing and finishing shall continue until the entire surface of the concrete is true. The sequence of operations for interior pavements shall be finishing, floating, straightedging, edging of joints and then a steel trowel finish as specified for concrete floor slabs. Before the surface sheen has disappeared and well before the concrete becomes nonplastic, the surface of the pavement shall be given a broomed finish. Curing shall be as specified.

3.11.1.1 Surface Tolerance for Pavements

a. Surface Tolerance for Concrete Pavements: Exterior concrete and interior pavements shall be smooth and true to grade and cross section. When tested with a 3.05 meter straightedge on lines 1.52 meters apart parallel with the center line of the pavement, the surface shall not vary more than 3 mm from the testing edge of the straightedge.

b. Surface Tests and Corrections: As soon as the concrete has hardened enough to permit walking thereon, but not later than 24 hours after the concrete has been placed, the surface of the pavement shall be tested with an approved straightedge or other approved device that will reveal all surface irregularities varying from the testing edge exceeding tolerances specified above for roadways and interior pavements. The testing shall be performed by the Contractor at no expense to the Government. High spots indicated by the testing edge in excess of applicable tolerances shall be marked plainly and removed or reduced by rubbing with a carborundum brick and water. Rubbing shall be discontinued as soon as contact with the coarse aggregate is made. If high spots cannot be removed in the above manner because of disturbing the coarse aggregate, the high portion of the pavement shall be corrected by an approved surface-grinding machine after the concrete is 14 days old, or the pavement shall be removed and replaced. No area of pavement that was removed and replaced and no adjacent slab or portion of a slab that remains in the pavement abutting the replacement slab shall have a length or width less than 3.05 meters. Testing for acceptance or rejection of the finished pavement surface will be performed by the Contractor in the presence of the Contracting Officer.

3.11.1.2 PAVEMENT JOINTS (Including the joints for the interior pavements subjected to vehicular traffic)

a. General: Joints shall conform to the details indicated and shall be perpendicular to the finished grade of the pavement. Transverse expansion and contraction joints shall be straight and continuous from edge of the pavement and shall conform to the requirements specified in Section 03250.

b. Longitudinal Construction Joints: Longitudinal construction joints between paving lanes shall be located as indicated. Dowels, shall be installed in the longitudinal construction joints or the edges shall be thickened as required and as indicated. Dowels shall be installed in conformance with paragraph DOWELS below. Longitudinal construction joints shall be edged and subsequently sawed to provide a groove at the top conforming to the details and dimensions indicated.

c. Transverse Construction Joints: Transverse construction joints shall be installed at the end of each day's placing operations and at any other points within a paving lane when concrete placement is interrupted for 30 minutes or longer. Insofar as practicable, transverse construction joints shall be installed in the location of a planned joint. When concrete placement cannot be continued, the transverse construction joint may be installed within the slab unit, but not less than 3.05 meters from a planned transverse joint. Transverse construction joints shall be doweled as shown. When the construction joint is located at planned transverse joints, one half of each dowel shall be painted and oiled to permit movement at the joint. These joints shall be edged and subsequently sawed to provide a groove at the top conforming to the details and dimensions indicated. When concrete placing is resumed, the planned joint spacing shall be used beginning with the first regularly scheduled transverse joint.

d. Sealing Joints: Joints shall be sealed immediately following curing of the concrete or as soon thereafter as weather conditions permit, as directed. Sawing of filler-type joints shall be accomplished immediately before sealing of the joints. All joints shall be filled with joint sealant except where floor covering is required.

e. Pavement Protection: The Contractor shall protect the pavement against all damage prior to final acceptance of the work by the Government. Traffic shall be excluded from the pavement by erecting and maintaining barricades and signs until the concrete is at least 14 days old and the joints have been sealed, or for a longer period if so directed.

3.11.1.3 Broom Texture Finish

Surface texture shall be applied using an approved hand or mechanical stiff bristle broom of a type that will produce uniform corrugations. For hand brooming, the brooms shall have handles longer than half the width of slab to be finished. The hand brooms shall be drawn transversely across the surface from the center line to each edge with slight overlapping strokes. For mechanical operations, the broom shall be operated with the length of the broom parallel to the pavement center line. The broom shall be capable of traversing the full width of the pavement in a single pass at a uniform speed and with a uniform pressure. Successive passes of the broom shall be overlapped the minimum necessary to obtain a uniformly textures surface. Brooms shall be washed thoroughly and dried at frequent intervals during use. Worm or damaged brooms shall be removed from the jobsite. Brooming should be completed before the concrete has dried to the point where the surface will be unduly torn or roughened, but after drying has progressed enough so that the mortar will not flow and attenuate the sharpness of the corrugations. Specific requirements for the texturing shall be as shown, but in general the corrugations should be uniform in appearance and approximately 1.6 mm in depth but not more than 3 mm in depth.

3.11.2 Sidewalks and Curbs and Gutters

Sidewalks and Curbs and Gutters shall conform to the requirements of Section 02770 CONCRETE SIDEWALKS AND CURBS AND GUTTERS

3.11.3 Pits and Trenches

Pits and trenches shall be constructed as indicated on the drawings. Bottoms and walls shall be placed monolithically or waterstops and keys, shall be provided as approved.

3.12 CURING AND PROTECTION

3.12.1 General

Concrete shall be cured by an approved method for the period of time given below:

Concrete with Type III cement	3 days
All other concrete	7 days

Immediately after placement, concrete shall be protected from premature drying, extremes in temperatures, rapid temperature change, mechanical injury and damage from rain and flowing water for the duration of the curing period. Air and forms in contact with concrete shall be maintained at a temperature above 10 degrees C for the first 3 days and at a temperature above 0 degrees C for the remainder of the specified curing period. Exhaust fumes from combustion heating units shall be vented to the outside of the enclosure, and heaters and ducts shall be placed and directed so as not to cause areas of overheating and drying of concrete surfaces or to create fire hazards. Materials and equipment needed for adequate curing and protection shall be available and at the site prior to placing concrete. No fire or excessive heat, including welding, shall be permitted near or in direct contact with the concrete at any time. Except as otherwise permitted by paragraph Membrane Forming Curing Compounds, moist curing shall be provided for any areas to receive floor hardener, any paint or other applied coating, or to which other concrete is to be bonded. Moist curing or moist and membrane curing shall be used for all pavements and interior floor slabs. Except for plastic coated burlap, impervious sheeting alone shall not be used for curing.

3.12.2 Moist Curing

Concrete to be moist-cured shall be maintained continuously wet for the entire curing period, commencing immediately after finishing. If water or curing materials used stain or discolor concrete surfaces which are to be permanently exposed, the concrete surfaces shall be cleaned as approved. When wooden forms are left in place during curing, they shall be kept wet at all times. If steel forms are used in hot weather, nonsupporting vertical forms shall be broken loose from the concrete soon after the concrete hardens and curing water continually applied in this void. If the forms are removed before the end of the curing period, curing shall be carried out as on unformed surfaces, using suitable materials. Surfaces shall be cured by ponding, by continuous sprinkling, by continuously saturated burlap or cotton mats, or by continuously saturated plastic coated burlap. Burlap and mats shall be clean and free from any contamination and shall be completely saturated before being placed on the concrete. The Contractor shall have an approved work system to ensure that moist curing is continuous 24 hours per day.

3.12.3 Membrane Forming Curing Compounds

Membrane curing shall not be used on surfaces that are to receive any subsequent treatment depending on adhesion or bonding to the concrete,

including surfaces to which a smooth finish is to be applied or other concrete to be bonded. However, a styrene acrylate or chlorinated rubber compound meeting ASTM C 309, Class B requirements, may be used for surfaces which are to be painted or are to receive bituminous roofing or waterproofing, or floors that are to receive adhesive applications of resilient flooring. The curing compound selected shall be compatible with any subsequent paint, roofing, waterproofing or flooring specified. Membrane curing compound shall not be used on surfaces that are maintained at curing temperatures with free steam. Curing compound shall be applied to formed surfaces immediately after the forms are removed and prior to any patching or other surface treatment except the cleaning of loose sand, mortar, and debris from the surface. All surfaces shall be thoroughly moistened with water. Curing compound shall be applied to slab surfaces as soon as the bleeding water has disappeared, with the tops of joints being temporarily sealed to prevent entry of the compound and to prevent moisture loss during the curing period. The curing compound shall be applied in a two-coat continuous operation by approved motorized power-spraying equipment operating at a minimum pressure of 500 kPa, at a uniform coverage of not more than 10 cubic meters per L for each coat, and the second coat shall be applied perpendicular to the first coat. Concrete surfaces which have been subjected to rainfall within 3 hours after curing compound has been applied shall be resprayed by the method and at the coverage specified. Surfaces on which clear compound is used shall be shaded from direct rays of the sun for the first 3 days. Surfaces coated with curing compound shall be kept free of foot and vehicular traffic, and from other sources of abrasion and contamination during the curing period.

3.12.4 Impervious Sheeting

areas to receive a trowel finish may not be cured using using impervious sheeting. However, except for plastic coated burlap, impervious sheeting alone shall not be used for curing. Impervious-sheet curing shall only be used on horizontal or nearly horizontal surfaces. Surfaces shall be thoroughly wetted and be completely covered with the sheeting. Sheeting shall be at least 450 mm wider than the concrete surface to be covered. Covering shall be laid with light-colored side up. Covering shall be lapped not less than 300 mm and securely weighted down or shall be lapped not less than 100 mm and taped to form a continuous cover with completely closed joints. The sheet shall be weighted to prevent displacement so that it remains in contact with the concrete during the specified length of curing. Coverings shall be folded down over exposed edges of slabs and secured by approved means. Sheets shall be immediately repaired or replaced if tears or holes appear during the curing period.

3.12.5 Ponding or Immersion

Concrete shall be continually immersed throughout the curing period. Water shall not be more than 10 degrees C less than the temperature of the concrete.

3.12.6 Cold Weather Curing and Protection

When the daily ambient low temperature is less than 0 degrees C the temperature of the concrete shall be maintained above 5 degrees C for the first seven days after placing. During the period of protection removal, the air temperature adjacent to the concrete surfaces shall be controlled so that concrete near the surface will not be subjected to a temperature differential of more than 13 degrees C as determined by suitable temperature measuring devices furnished by the Contractor, as required, and

installed adjacent to the concrete surface and 50 mm inside the surface of the concrete. The installation of the thermometers shall be made by the Contractor as directed.

3.12.7 Moist and Membrane Curing for Pavements

Immediately after finishing operations have been completed and the concrete has set sufficiently to prevent marring of the surface, the forms and entire surface of the newly laid concrete shall be covered with wetted burlap or cotton mats. Burlap covers shall consist of two or more layers of burlap having a combined weight of 475 grams or more per square meter in a dry condition. Cotton or burlap mats, after shrinkage, shall be at least 0.305 meters longer than necessary to cover the entire width and edge of the pavement lane. Adjacent mats shall overlap at least 150 mm. The mats shall be wetted thoroughly before placing and shall be kept continuously wet and in intimate contact with the pavement edges and surface for the duration of the curing period. This initial moist curing shall be continued for at least 24 hours. The surface of the newly laid concrete shall be kept moist by means of approved fog-spraying equipment until the burlap or cotton-mat coverings are in place. After the initial moist curing, the contractor shall have the option of continuing the moist curing or applying a curing compound for the duration of the curing period. If curing compound is used, immediately after the removal of the wet covering used for initial curing, the entire exposed surface of the concrete shall be uniformly coated with a white-pigmented membrane-curing compound. Formed surfaces shall be coated immediately after the forms are removed and in no case longer than 1 hour after the removal of forms. Concrete shall not be allowed to dry before the application of the membrane. If any drying has occurred, the surface of the concrete shall be moistened with a fine spray of water, and the curing compound applied as soon as the free water disappears. The curing compound shall be applied to the finished surfaces by means of an approved automatic spraying machine. The spraying machine shall be self-propelled and shall straddle the newly paved lane. The machine shall have one or more spraying nozzles that can be controlled and operated to completely and uniformly cover the pavement surface with the required amount of curing compound. The curing compound in the drum used for the spraying operation shall be thoroughly and continuously agitated mechanically throughout the full depth of the drum during the application. Air agitation may be used only to supplement mechanical agitation. Spraying pressure shall be sufficient to produce a fine spray as necessary to cover the surface thoroughly and completely with a uniform film. Spray equipment shall be maintained in first-class mechanical condition and the spray nozzle shall have an adequate wind guard. The curing compound shall be applied with an overlapping coverage that will give a two-coat application and a coverage of not more than 37 square meters per gallon for each coat. The application of curing compound by hand-operated sprayers, the second coat shall be applied in a direction approximately at right angles to the direction of the first coat. The compound shall form a uniform, continuous cohesive film that will not check, crack, or peel and that will be free from pinholes and other discontinuities. If pinholes, abrasions, or other discontinuities exist, an additional coat shall be applied to the affected areas within 30 minutes. Concrete surfaces that are subjected to heavy rainfall within 3 hours after the curing compound has been applied shall be resprayed by the method and at the coverage specified above. Areas where the curing compound is damaged by subsequent construction operations within the curing period shall be resprayed. Necessary precautions shall be taken to insure that the concrete is properly cured at sawed joints, but that no curing compound enters the joints. The top of the joint opening and the joint

groove at exposed edges shall be tightly sealed before the concrete in the region of the joint is resprayed with curing compound. The method used for sealing the joint groove shall prevent loss of moisture from the joint during the entire specified curing period. Approved standby facilities for curing concrete pavement shall be provided at an accessible location at the jobsite for use in the event of mechanical failure of the spraying equipment or other conditions that might prevent correct application of the membrane-curing compound at the proper time. Concrete surfaces to which membrane-curing compounds have been applied shall be adequately protected during the entire curing period from pedestrian and vehicular traffic, except as required for joint-sawing operations and surface tests, and from any other possible damage to the continuity of the membrane.

3.13 SETTING BASE PLATES AND BEARING PLATES

After being properly positioned, column base plates, bearing plates for beams and similar structural members, and machinery and equipment base plates shall be set to the proper line and elevation with damp-pack bedding mortar, except where nonshrink grout is indicated. The thickness of the mortar or grout shall be approximately 1/24 the width of the plate, but not less than 20 mm. Concrete and metal surfaces in contact with grout shall be clean and free of oil and grease, and concrete surfaces in contact with grout shall be damp and free of laitance when grout is placed.

3.13.1 Damp-Pack Bedding Mortar

Damp-pack bedding mortar shall consist of 1 part cement and 2-1/2 parts fine aggregate having water content such that a mass of mortar tightly squeezed in the hand will retain its shape but will crumble when disturbed. The space between the top of the concrete and bottom of the bearing plate or base shall be packed with the bedding mortar by tamping or ramming with a bar or rod until it is completely filled.

3.13.2 Nonshrink Grout

Nonshrink grout shall be a ready-mixed material requiring only the addition of water. Water content shall be the minimum that will provide a flowable mixture and completely fill the space to be grouted without segregation, bleeding, or reduction of strength.

3.13.2.1 Mixing and Placing of Nonshrink Grout

Mixing and placing shall be in conformance with the material manufacturer's instructions and as specified therein. Ingredients shall be thoroughly dry-mixed before adding water. After adding water, the batch shall be mixed for 3 minutes. Batches shall be of size to allow continuous placement of freshly mixed grout. Grout not used within 30 minutes after mixing shall be discarded. The space between the top of the concrete or machinery-bearing surface and the plate shall be filled solid with the grout. Forms shall be of wood or other equally suitable material for completely retaining the grout on all sides and on top and shall be removed after the grout has set. The placed grout shall be carefully worked by rodding or other means to eliminate voids; however, overworking and breakdown of the initial set shall be avoided. Grout shall not be retempered or subjected to vibration from any source. Where clearances are unusually small, placement shall be under pressure with a grout pump. Temperature of the grout, and of surfaces receiving the grout, shall be maintained at 18 to 30 degrees C until after setting.

3.13.2.2 Treatment of Exposed Surfaces

For metal-oxidizing nonshrink grout, exposed surfaces shall be cut back 25 mm and immediately covered with a parge coat of mortar consisting of 1 part portland cement and 2-1/2 parts fine aggregate by weight, with sufficient water to make a plastic mixture. The parge coat shall have a smooth finish. For other mortars or grouts, exposed surfaces shall have a smooth-dense finish and be left untreated. Curing shall comply with paragraph CURING AND PROTECTION.

3.14 TESTING AND INSPECTION FOR CONTRACTOR QUALITY CONTROL

The Contractor shall perform the inspection and tests described below and, based upon the results of these inspections and tests, shall take the action required and shall submit specified reports. When, in the opinion of the Contracting Officer, the concreting operation is out of control, concrete placement shall cease and the operation shall be corrected. The laboratory performing the tests shall be on site and shall conform with ASTM C 1077. Materials may be subjected to check testing by the Government from samples obtained at the manufacturer, at transfer points, or at the project site. The Government will inspect the laboratory, equipment, and test procedures prior to start of concreting operations and periodically thereafter for conformance with ASTM C 1077.

3.14.1 Grading and Corrective Action

3.14.1.1 Fine Aggregate

At least once during each shift when the concrete plant is operating, there shall be one sieve analysis and fineness modulus determination in accordance with ASTM C 136 and COE CRD-C 104 for the fine aggregate or for each fine aggregate if it is batched in more than one size or classification. The location at which samples are taken may be selected by the Contractor as the most advantageous for control. However, the Contractor is responsible for delivering fine aggregate to the mixer within specification limits. When the amount passing on any sieve is outside the specification limits, the fine aggregate shall be immediately resampled and retested. If there is another failure on any sieve, the fact shall immediately reported to the Contracting Officer, concreting shall be stopped, and immediate steps taken to correct the grading.

3.14.1.2 Coarse Aggregate

At least once during each shift in which the concrete plant is operating, there shall be a sieve analysis in accordance with ASTM C 136 for each size of coarse aggregate. The location at which samples are taken may be selected by the Contractor as the most advantageous for production control. However, the Contractor shall be responsible for delivering the aggregate to the mixer within specification limits. A test record of samples of aggregate taken at the same locations shall show the results of the current test as well as the average results of the five most recent tests including the current test. The Contractor may adopt limits for control coarser than the specification limits for samples taken other than as delivered to the mixer to allow for degradation during handling. When the amount passing any sieve is outside the specification limits, the coarse aggregate shall be immediately resampled and retested. If the second sample fails on any sieve, that fact shall be reported to the Contracting Officer. Where two consecutive averages of 5 tests are outside specification limits, the operation shall be considered out of control and shall be reported to the

Contracting Officer. Concreting shall be stopped and immediate steps shall be taken to correct the grading.

3.14.2 Quality of Aggregates

Thirty days prior to the start of concrete placement, the Contractor shall perform all tests for aggregate quality required by ASTM C 33. Tests shall not have been performed more than 6 months prior to submission. The mortar bar method of testing for alkali reaction shall be performed only if the chemical test method indicates the aggregates to be potentially deleterious. In addition, after the start of concrete placement, the Contractor shall perform tests for aggregate quality at least every three months, and when the source of aggregate or aggregate quality changes. Samples tested after the start of concrete placement shall be taken immediately prior to entering the concrete mixer.

3.14.3 Scales, Batching and Recording

The accuracy of the scales shall be checked by test weights prior to start of concrete operations and at least once every three months. Such tests shall also be made as directed whenever there are variations in properties of the fresh concrete that could result from batching errors. Once a week the accuracy of each batching and recording device shall be checked during a weighing operation by noting and recording the required weight, recorded weight, and the actual weight batched. At the same time, the Contractor shall test and ensure that the devices for dispensing admixtures are operating properly and accurately. When either the weighing accuracy or batching accuracy does not comply with specification requirements, the plant shall not be operated until necessary adjustments or repairs have been made. Discrepancies in recording accuracies shall be corrected immediately.

3.14.4 Batch-Plant Control

The measurement of concrete materials including cementitious materials, each size of aggregate, water, and admixtures shall be continuously controlled. The aggregate weights and amount of added water shall be adjusted as necessary to compensate for free moisture in the aggregates. The amount of air-entraining agent shall be adjusted to control air content within specified limits. A report shall be prepared indicating type and source of cement used, type and source of pozzolan or slag used, amount and source of admixtures used, aggregate source, the required aggregate and water weights per cubic meter, amount of water as free moisture in each size of aggregate, and the batch aggregate and water weights per cubic meter for each class of concrete batched during each day's plant operation.

3.14.5 Concrete Mixture

a. Air Content Testing. One test for air content shall be performed per truckload of concrete or per batch of concrete mixed on site for each separate concrete mixture produced. Tests shall be made in accordance with ASTM C 231 for normal weight concrete. Test results shall be plotted on control charts which shall at all times be readily available to the Government and shall be submitted weekly. Copies of the current control charts shall be kept in the field by testing crews and results plotted as tests are made. When a single test result reaches either the upper or lower action limit, a second test shall immediately be made. The results of the two tests shall be averaged and this average used

as the air content of the batch to plot on both the air content and the control chart for range, and for determining need for any remedial action. The result of each test, or average as noted in the previous sentence, shall be plotted on a separate control chart for each mixture on which an "average line" is set at the midpoint of the specified air content range from paragraph Air Entrainment. An upper warning limit and a lower warning limit line shall be set 1.0 percentage point above and below the average line, respectively. An upper action limit and a lower action limit line shall be set 1.5 percentage points above and below the average line, respectively. The range between each two consecutive tests shall be plotted on a secondary control chart for range where an upper warning limit is set at 2.0 percentage points and an upper action limit is set at 3.0 percentage points. Samples for air content may be taken at the mixer, however, the Contractor is responsible for delivering the concrete to the placement site at the stipulated air content. If the Contractor's materials or transportation methods cause air content loss between the mixer and the placement, correlation samples shall be taken at the placement site as required by the Contracting Officer, and the air content at the mixer controlled as directed.

b. Air Content Corrective Action. Whenever points on the control chart for percent air reach either warning limit, an adjustment shall immediately be made in the amount of air-entraining admixture batched. As soon as practical after each adjustment, another test shall be made to verify the result of the adjustment. Whenever a point on the secondary control chart for range reaches the warning limit, the admixture dispenser shall be recalibrated to ensure that it is operating accurately and with good reproducibility. Whenever a point on either control chart reaches an action limit line, the air content shall be considered out of control and the concreting operation shall immediately be halted until the air content is under control. Additional air content tests shall be made when concreting is restarted.

c. Slump Testing. One slump test shall be performed per truckload of concrete or per batch mixed on site. Tests shall be performed in accordance with ASTM C 143.Test results shall be plotted on control charts which shall at all times be readily available to the Government and shall be submitted weekly. Copies of the current control charts shall be kept in the field by testing crews and results plotted as tests are made. When a single slump test reaches or goes beyond either the upper or lower action limit, a second test shall immediately be made. The results of the two tests shall be averaged and this average used as the slump of the batch to plot on both the control charts for slump and the chart for range, and for determining need for any remedial action. Limits shall be set on separate control charts for slump for each type of mixture. The upper warning limit shall be set at 12.5 mm below the maximum allowable slump specified in paragraph Slump in PART 1 for each type of concrete and an upper action limit line and lower action limit line shall be set at the maximum and minimum allowable slumps, respectively, as specified in the same paragraph. The range between each consecutive slump test for each type of mixture shall be plotted on a single control chart for range on which an upper action limit is set at 50 mm. Samples for slump shall be taken at the mixer. However, the Contractor is responsible for delivering the concrete to the placement site at

the stipulated slump. If the Contractor's materials or transportation methods cause slump loss between the mixer and the placement, correlation samples shall be taken at the placement site as required by the Contracting Officer, and the slump at the mixer controlled as directed.

d. Slump Corrective Action. Whenever points on the control charts for slump reach the upper warning limit, an adjustment shall immediately be made in the batch weights of water and fine aggregate. The adjustments are to be made so that the total water content does not exceed that amount allowed by the maximum w/c ratio specified, based on aggregates which are in a saturated surface dry condition. When a single slump reaches the upper or lower action limit, no further concrete shall be delivered to the placing site until proper adjustments have been made. Immediately after each adjustment, another test shall be made to verify the correctness of the adjustment. Whenever two consecutive individual slump tests, made during a period when there was no adjustment of batch weights, produce a point on the control chart for range at or above the upper action limit, the concreting operation shall immediately be halted, and the Contractor shall take appropriate steps to bring the slump under control. Additional slump tests shall be made as directed.

e. Temperature. The temperature of the concrete shall be measured when compressive strength specimens are fabricated. Measurement shall be in accordance with ASTM C 1064. The temperature shall be reported along with the compressive strength data.

f. Strength Specimens. At least one set of test specimens shall be made, for compressive or flexural strength as appropriate, on each different concrete mixture placed during the day for each 380 cubic meters or portion thereof of that concrete mixture placed each day. Additional sets of test specimens shall be made, as directed by the Contracting Officer, when the mixture proportions are changed or when low strengths have been detected. A truly random (not haphazard) sampling plan shall be developed by the Contractor and approved by the Contracting Officer prior to the start of construction. The plan shall assure that sampling is done in a completely random and unbiased manner. A set of test specimens for concrete with a 28-day specified strength per paragraph Strength Requirements in PART 1 shall consist of four specimens, two to be tested at 7 days and two at 28 days. Test specimens shall be molded and cured in accordance with ASTM C 31 and tested in accordance with ASTM C 39 for test cylinders and ASTM C 78 for test beams. Results of all strength tests shall be reported immediately to the Contracting Officer. Quality control charts shall be kept for individual strength "tests", ("test" as defined in paragraph Strength Requirements in PART 1) moving average of last 3 "tests" for strength, and moving average for range for the last 3 "tests" for each mixture. The charts shall be similar to those found in ACI 214.3R.

3.14.6 Inspection Before Placing

Foundations, construction joints, forms, and embedded items shall be inspected by the Contractor in sufficient time prior to each concrete placement in order to certify to the Contracting Officer that they are ready to receive concrete. The results of each inspection shall be

reported in writing.

3.14.7 Placing

The placing foreman shall supervise placing operations, shall determine that the correct quality of concrete or grout is placed in each location as specified and as directed by the Contracting Officer, and shall be responsible for measuring and recording concrete temperatures and ambient temperature hourly during placing operations, weather conditions, time of placement, volume placed, and method of placement. The placing foreman shall not permit batching and placing to begin until it has been verified that an adequate number of vibrators in working order and with competent operators are available. Placing shall not be continued if any pile of concrete is inadequately consolidated. If any batch of concrete fails to meet the temperature requirements, immediate steps shall be taken to improve temperature controls.

3.14.8 Vibrators

The frequency and amplitude of each vibrator shall be determined in accordance with COE CRD-C 521 prior to initial use and at least once a month when concrete is being placed. Additional tests shall be made as directed when a vibrator does not appear to be adequately consolidating the concrete. The frequency shall be determined while the vibrator is operating in concrete with the tachometer being held against the upper end of the vibrator head while almost submerged and just before the vibrator is withdrawn from the concrete. The amplitude shall be determined with the head vibrating in air. Two measurements shall be taken, one near the tip and another near the upper end of the vibrator head, and these results averaged. The make, model, type, and size of the vibrator and frequency and amplitude results shall be reported in writing. Any vibrator not meeting the requirements of paragraph Consolidation, shall be immediately removed from service and repaired or replaced.

3.14.9 Curing Inspection

a. Moist Curing Inspections. At least once each shift, and not less than twice per day on both work and non-work days, an inspection shall be made of all areas subject to moist curing. The surface moisture condition shall be noted and recorded.

b. Moist Curing Corrective Action. When a daily inspection report lists an area of inadequate curing, immediate corrective action shall be taken, and the required curing period for those areas shall be extended by 1 day.

c. Membrane Curing Inspection. No curing compound shall be applied until the Contractor has verified that the compound is properly mixed and ready for spraying. At the end of each operation, the Contractor shall estimate the quantity of compound used by measurement of the container and the area of concrete surface covered, shall compute the rate of coverage in square meters per Liter, and shall note whether or not coverage is uniform.

d. Membrane Curing Corrective Action. When the coverage rate of the curing compound is less than that specified or when the coverage is not uniform, the entire surface shall be sprayed again.

e. Sheet Curing Inspection. At least once each shift and once per

day on non-work days, an inspection shall be made of all areas being cured using impervious sheets. The condition of the covering and the tightness of the laps and tapes shall be noted and recorded.

f. Sheet Curing Corrective Action. When a daily inspection report lists any tears, holes, or laps or joints that are not completely closed, the tears and holes shall promptly be repaired or the sheets replaced, the joints closed, and the required curing period for those areas shall be extended by 1 day.

3.14.10 Cold-Weather Protection

At least once each shift and once per day on non-work days, an inspection shall be made of all areas subject to cold-weather protection. Any deficiencies shall be noted, corrected, and reported.

3.14.11 Mixer Uniformity

a. Stationary Mixers. Prior to the start of concrete placing and once every 6 months when concrete is being placed, or once for every 60,000 cubic meters of concrete placed, whichever results in the shortest time interval, uniformity of concrete mixing shall be determined in accordance with ASTM C 94.

b. Truck Mixers. Prior to the start of concrete placing and at least once every 6 months when concrete is being placed, uniformity of concrete mixing shall be determined in accordance with ASTM C 94. The truck mixers shall be selected randomly for testing. When satisfactory performance is found in one truck mixer, the performance of mixers of substantially the same design and condition of the blades may be regarded as satisfactory.

c. Mixer Uniformity Corrective Action. When a mixer fails to meet mixer uniformity requirements, either the mixing time shall be increased, batching sequence changed, batch size reduced, or adjustments shall be made to the mixer until compliance is achieved.

3.14.12 Reports

All results of tests or inspections conducted shall be reported informally as they are completed and in writing daily. A weekly report shall be prepared for the updating of control charts covering the entire period from the start of the construction season through the current week. During periods of cold-weather protection, reports of pertinent temperatures shall be made daily. These requirements do not relieve the Contractor of the obligation to report certain failures immediately as required in preceding paragraphs. Such reports of failures and the action taken shall be confirmed in writing in the routine reports. The Contracting Officer has the right to examine all contractor quality control records.

-- End of Section --

SECTION 03450

PRECAST ARCHITECTURAL CONCRETE

PART 1 GENERAL

1.1 REFERENCES

The publications listed below form a part of this specification to the extent referenced. The publications are referred to in the text by basic designation only.

ACI INTERNATIONAL (ACI)

ACI 211.1	(1991) Standard Practice for Selecting Proportions for Normal, Heavyweight, and Mass Concrete
ACI 211.2	(1991) Standard Practice for Selecting Proportions for Structural Lightweight Concrete
ACI 315	(1992) ACI Detailing Manual: Section Details and Detailing of Concrete Reinforcement
ACI 318/318R	(1989; Rev 1992; Errata) Building Code Requirements for Reinforced Concrete

AMERICAN SOCIETY FOR TESTING AND MATERIALS (ASTM)

ASTM A 416	(1994) Steel Strand, Uncoated Seven-Wire for Prestressed Concrete
ASTM C 494	(1992) Chemical Admixtures for Concrete
ASTM C 1017	(1992) Chemical Admixtures for Use in Producing Flowing Concrete

AMERICAN WELDING SOCIETY (AWS)

AWS D1.1	(1994) Structured Welding Code - Steel

PRECAST/PRESTRESSED CONCRETE INSTITUTE (PCI)

PCI Mnl-116	(1985) Manual for Quality Control for Plants and Production of Precast and Prestressed Concrete Products
PCI Mnl-117	(1977) Manual for Quality Control for Plants and Production of Architectural Precast Concrete Products
PCI Mnl-122	(1989) Architectural Precast Concrete

1.2 GENERAL REQUIREMENTS

Precast concrete units shall be designed and fabricated by an experienced and acceptable precast concrete manufacturer certified under the PCI Plant Certification Program. The manufacturer shall have been regularly and continuously engaged in the manufacture of precast concrete work similar to that indicated on the drawings for at least 3 years. Precast work shall be coordinated with the work of other trades.

1.3 DESIGN

1.3.1 Standards and Loads

Precast unit design shall conform to ACI 318/318R and PCI Mnl-122. Design loads for precast concrete shall be as indicated on the drawings. A differential temperature of 89 degrees C, between interior and exterior faces of the units, shall be considered in the design. Stresses due to restrained volume change caused by shrinkage and temperature differential, handling, transportation and erection shall be accounted for in the design.

1.3.2 Connections

Connection of units to other members, or to other units shall be of the type and configuration indicated. The design and sizing of connections for all design loads shall be by the Contractor.

1.3.3 Concrete Strength

Precast concrete units shall have a 28-day compressive strength of 34 MPa.

1.3.4 Concrete Proportion

Selection of proportions for concrete shall be based on the methodology presented in ACI 211.1 for normal weight concrete and ACI 211.2 for lightweight concrete. The concrete proportion shall be developed using the same type and brand of cement, the same type and gradation of aggregates, and the same type and brand of admixture that will be used in the manufacture of precast concrete units for the project. Calcium chloride shall not be used in precast concrete and admixtures containing chloride ions, nitrates, or other substances that are corrosive shall not be used in prestressed concrete.

1.3.5 Calculations

Calculations for design of members and connections not shown shall be made by a professional engineer experienced in the design of precast architectural concrete. Calculation shall include the analysis of member for lifting stresses and the sizing of the lifting inserts.

1.4 SUBMITTALS

Government approval is required for submittals with a "GA" designation; submittals having an "FIO" designation are for information only. The following shall be submitted in accordance with Section 01330 SUBMITTAL PROCEDURES:

SD-01 Data

Calculations; GA|ED.

Design calculations, prior to the manufacture of any precast architectural concrete units for the project.

Mix Design; FIO;AR.

A statement giving the maximum nominal coarse aggregate size, the proportions of all ingredients and the type and amount of any admixtures that will be used in the manufacture of each strength and type of concrete, prior to commencing operations. The statement shall be accompanied by test results from an approved testing laboratory, certifying that the proportions selected will produce concrete of the properties required. No substitutions shall be made without additional tests to verify that the concrete properties are satisfactory.

SD-04 Drawings

Architectural Concrete System; GA|ED.

Detail drawings showing details in accordance with ACI 315 and ACI 318/318R, including installation details. Detail drawings shall indicate separate identification marks for each different precast unit, location of units in the work, elevations, fabrication details, welding details, reinforcement, connections, dimensions, interface with adjacent members, blocking points for units stored at the precast concrete plant or at the jobsite, lifting points and special handling instructions in sufficient detail to cover manufacture, handling, and erection.

SD-09 Reports

Materials; FIO;AR.

Certified copies of test reports including all test data and all test results. Tests for compressive strength of concrete shall be performed by an approved independent commercial testing laboratory, except that compressive strength tests for initial prestress may be performed in the manufacturer's plant laboratory.

SD-14 Samples

Precast Concrete Units; GA|ED.

Two 300 by 300 by 50 mm samples of each type of precast unit finish required for the project. Samples shall show matrix color, surface color, surface texture, and panel back finish.

SD-18 Records

Manufacturer's Qualifications; FIO;AR.

A statement giving the qualifications of the precast concrete manufacturer and of the installers, prior to commencing operations.

1.5 STORAGE AND INSPECTION AT MANUFACTURER'S PLANT

Precast units temporarily stored at the manufacturer's plant shall be protected from damage in accordance with PCI Mnl-117 and PCI Mnl-122. Immediately prior to shipment to the jobsite, all precast concrete units shall be inspected for quality to insure all precast units conform to the requirements specified. Inspection for quality will include but not

necessarily be limited to the following elements; color, texture, dimensional tolerances, chipping, cracking, staining, warping and honeycombing. All defective precast concrete units shall be replaced or repaired as approved.

1.6 HANDLING AND STORAGE

Precast units shall be delivered to the site with delivery scheduled to avoid excessive build-up of units in storage at the site. Upon delivery to the jobsite all precast units shall be inspected for quality as specified above. If the precast units cannot be unloaded and placed directly into the work, they shall be stored on site, off the ground and protected from weather, marring, or overload. Precast units shall be handled in accordance with manufacturer's instructions.

PART 2 PRODUCTS

2.1 MATERIALS

Except as otherwise specified, material shall conform to Section 03300 CAST-IN-PLACE STRUCTURAL CONCRETE and Section 03200 CONCRETE REINFORCEMENT.

2.1.1 Aggregates

Aggregates shall be as shown in the drawings..

2.1.2 Reinforcing Steel

Reinforcing steel shall be galvanized if clearance to an exterior face is 25 mm or less.

2.1.3 Prestressing Strands

Prestressing strands shall conform to ASTM A 416.

2.1.4 Tie Wire

Tie wire shall be soft monel or 18-8 stainless steel.

2.1.5 Inserts

Inserts shall be manufacturer's standard, suited for the application.

2.1.6 Plates, Angles, Anchors and Embedments

Material shall be as specified in PCI Mnl-117. Steel items, other than stainless, shall be coated with a rust-inhibiting paint or shall be hot-dip galvanized. Steel items, including items embedded in concrete, shall be either stainless steel or hot dip galvanized steel.

2.1.7 Form Release Agent

Release agent shall be manufacturer's standard nonstaining type.

2.1.8 Admixtures

Admixtures shall conform to ASTM C 494. Plasticizing admixture, if used, shall conform to ASTM C 1017.

2.2 PRECAST CONCRETE UNITS

Precast concrete units shall be manufactured and cured in accordance with the applicable provisions of PCI Mnl-116 and PCI Mnl-117. Units shall be manufactured within the allowable tolerances given in PCI Mnl-116, PCI Mnl-117 and PCI Mnl-122.

2.2.1 Formwork

Forms shall be steel of adequate thickness, braced, stiffened, anchored and aligned to produce precast architectural concrete units within required dimensional tolerances. Forms shall be sufficiently rigid to provide dimensional stability during handling and concrete placement and consolidation. Fiberglass-reinforced plastic, plastic coated wood, elastomeric or other nonabsorptive material shall be used for making tight joints and rustication pieces.

2.2.2 Reinforcement

Fabrication and placement of reinforcement shall conform to the details shown on the approved detail drawings and PCI Mnl-116 and PCI Mnl-117.

2.2.3 Embedded Accessories

Anchors, inserts, lifting devices, and other accessories which are to be embedded in the precast units shall be furnished and installed in accordance with the approved detail drawings. Embedded items shall be accurately positioned in their designed location, and shall have sufficient anchorage and embedment to satisfy design requirements.

2.2.4 Stripping

Precast concrete units shall not be removed from forms until units develop sufficient strength to safely strip the formwork and to remove the precast concrete units from the forms to prevent damage to the units from overstress or chipping.

2.2.5 Identification

Each precast concrete unit shall be marked to correspond to the identification marks for each different precast unit shown on the detail drawings.

2.2.6 Finishes

2.2.6.1 Exposed Surfaces

Surfaces of precast units exposed to view or surfaces indicated to be finished shall be finished as shown on drawings.

2.2.6.2 Other Surfaces

Surfaces of precast units not exposed to view or not otherwise indicated to be finished shall be finished in accordance with Section 03300CAST-IN-PLACE STRUCTURAL CONCRETE.

PART 3 EXECUTION

3.1 ERECTION

Precast units shall be erected in accordance with the detail drawings and without damage to other units or to adjacent members. Units shall be set true to alignment and level, with joints properly spaced and aligned both vertically and horizontally. Erection tolerances shall be in accordance with the requirements of PCI Mnl-117 and PCI Mnl-122. As units are being erected, shims and wedges shall be placed as required to maintain correct alignment. After final attachment, precast units shall be grouted as shown. After erection, welds and abraded surfaces of steel shall be cleaned and touched-up with a zinc-rich paint. Welds shall be made by a certified welder in accordance with the manufacturer's erection drawings. Pickup points, boxouts, inserts, and the like shall be finished to match adjacent areas after erection. Erection of precast units shall be supervised and performed by workmen skilled in this type of work. Welding and the qualifications of welders shall be in accordance with AWS D1.1.

3.2 JOINT SEALING

Joint sealing shall be as specified in Section 07920 CALKING AND SEALANTS.

3.3 CLEANING

Not sooner than 72 hours after joints are sealed, faces and other exposed surfaces of precast concrete discolored during erection shall be cleaned to remove dirt and stains by dry scrubbing with a stiff fiber brush, wetting the surface and vigorous scrubbing of the finish with a stiff fiber brush followed by additional washing, or by chemical cleaning compounds such as detergents or other commercial cleaners. Commercial cleaners shall be used in accordance with the manufacturer's recommendations. Cleaning procedure shall be performed on a designated test area and shall be approved prior to proceeding with cleaning work. Discolorations which cannot be removed by these procedures, shall be considered defective work. Cleaning work shall be done when temperature and humidity conditions are such that surfaces dry rapidly. Care shall be taken during cleaning operations to protect adjacent surfaces from damage.

3.4 PROTECTION OF WORK

Precast units shall be protected against damage from subsequent operations.

3.5 DEFECTIVE WORK

Precast concrete units damaged during erection shall be repaired as soon after occurrence as possible or replaced, as directed, using approved procedures. All repairs to precast concrete units shall match the adjacent surfaces in color and texture and shall be as approved. Unless otherwise approved, repair procedures shall conform to PCI Mnl-117.

-- End of Section --

SECTION 04200

MASONRY

PART 1 GENERAL

1.1 REFERENCES

The publications listed below form a part of this specification to the extent referenced. The publications are referred to in the text by basic designation only.

ACI INTERNATIONAL (ACI)

ACI SP-66	(1994) ACI Detailing Manual

AMERICAN SOCIETY FOR TESTING AND MATERIALS (ASTM)

ASTM A 82	(1994) Steel Wire, Plain, for Concrete Reinforcement
ASTM A 153	(1996) Zinc Coating (Hot-Dip) on Iron and Steel Hardware
ASTM A 615	(1995) Deformed and Plain Billet-Steel Bars for Concrete Reinforcement
ASTM C 55	(1995) Concrete Building Brick
ASTM C 67	(1994) Sampling and Testing Brick and Structural Clay Tile
ASTM C 90	(1995) Loadbearing Concrete Masonry Units
ASTM C 91	(1995) Masonry Cement
ASTM C 216	(1995) Facing Brick (Solid Masonry Units Made from Clay or Shale)
ASTM C 270	(1995) Mortar for Unit Masonry
ASTM C 476	(1991) Grout for Masonry
ASTM C 494	(1992) Chemical Admixtures for Concrete
ASTM C 578	(1992) Rigid, Cellular Polystyrene Thermal Insulation
ASTM C 641	(1982; R 1991) Staining Materials in Lightweight Concrete Aggregates
ASTM C 652	(1994) Hollow Brick (Hollow Masonry Units Made From Clay or Shale)
ASTM C 780	(1994) Preconstruction and Construction Evaluation of Mortars for Plain and

	Reinforced Unit Masonry
ASTM C 1019	(1989a; R 1993) Sampling and Testing Grout
ASTM C 1072	(1994) Measurement of Masonry Flexural Bond Strength
ASTM C 1289	(1995) Faced Rigid Cellular Polyisocyanurate Thermal Insulation Board
ASTM D 2000	(1990; R 1994) Rubber Products in Automotive Applications
ASTM D 2240	(1991) Rubber Property - Durometer Hardness
ASTM D 2287	(1992) Nonrigid Vinyl Chloride Polymer and Copolymer Molding and Extrusion Compounds

1.2 SUBMITTALS

Government approval is required for submittals with a "GA" designation; submittals having an "FIO" designation are for information only. The following shall be submitted in accordance with SECTION 01330 SUBMITTAL PROCEDURES:

SD-01 Data

Clay or Shale Brick; GA|ED. Concrete Brick; GA|ED. Prefaced Concrete Masonry Units; GA|ED. Insulation; GA|ED.

Manufacturer's descriptive data.

SD-04 Drawings

Masonry Work; GA|ED.

Drawings including plans, elevations, and details of wall reinforcement; details of reinforcing bars at corners and wall intersections; offsets; tops, bottoms, and ends of walls; control and expansion joints; and wall openings. Bar splice locations shall be shown. Bent bars shall be identified on a bending diagram and shall be referenced and located on the drawings. Wall dimensions, bar clearances, and wall openings greater than one masonry unit in area shall be shown. No approval will be given to the shop drawings until the Contractor certifies that all openings, including those for mechanical and electrical service, are shown. If, during construction, additional masonry openings are required, the approved shop drawings shall be resubmitted with the additional openings shown along with the proposed changes. Location of these additional openings shall be clearly highlighted. The minimum scale for wall elevations shall be 1 to 50. Reinforcement bending details shall conform to the requirements of ACI SP-66.

SD-08 Statements

Cold Weather Installation; GA|ED.

Cold weather construction procedures.

SD-09 Reports

Efflorescence Test; FIO;AR. Field Testing of Mortar; FIO;AR. Field Testing of Grout; FIO;AR. Prism tests; FIO;AR. Masonry Cement; FIO;AR. Fire-rated CMU; FIO;AR.

Test reports from an approved independent laboratory. Test reports on a previously tested material shall be certified as the same as that proposed for use in this project.

Special Inspection; GA|ED.

Copies of masonry inspector reports.

SD-13 Certificates

Clay or Shale Brick; FI0;AR. Concrete Brick; FIO;AR. Concrete Masonry Units (CMU); FIO;AR. Prefaced Concrete Masonry Units; FIO;AR. Control Joint Keys; FIO;AR. Anchors, Ties, and Bar Positioners; FIO;AR. Expansion-Joint Materials; FIO;AR. Joint Reinforcement; FIO;AR. Reinforcing Steel Bars and Rods; FIO;AR. Masonry Cement; FIO;AR. Mortar Coloring; FIO;AR. Insulation; FIO;AR. Precast Concrete Items; FIO;AR. Mortar Admixtures; FIO;AR. Grout Admixtures; FIO;AR. Ceramic Glazed Structural Clay Facing Units; FIO;AR.

Certificates of compliance stating that the materials meet the specified requirements.

Insulation; GA|ED.

Certificate attesting that the polyurethane or polyisocyanurate insulation furnished for the project contains recovered material, and showing an estimated percent of such recovered material.

SD-14 Samples

Concrete Masonry Units (CMU); GA|ED. Concrete Brick; GA|ED. Cast Stone Items; GA|ED. Clay or Shale Brick; GA|ED.

Color samples of three stretcher units and one unit for each type of special shape. Units shall show the full range of color and texture.

Anchors, Ties, and Bar Positioners; FIO;AR.

Two of each type used.

Expansion-Joint Material; FIO;AR.

One piece of each type used.

Joint Reinforcement; FIO;AR.

One piece of each type used, including corner and wall intersection pieces, showing at least two cross wires.

Insulation; FIO;AR.

One piece of board type insulation, not less than 400 mm by 600 mm in size, containing the label indicating the rated permeance and R-values.

Portable Panel; GA|ED.

One panel of clay or shale brick, 600 mm by 600 mm, containing approximately 24 brick facings to establish range of color and texture.

1.3 SAMPLE MASONRY PANELS

After material samples are approved and prior to starting masonry work, sample masonry panels shall be constructed for each type and color of masonry required. At least 48 hours prior to constructing the sample panel or panels, the Contractor shall submit written notification to the Contracting Officer's Representative. Sample panels shall not be built in, or as part of the structure, but shall be located where directed.

1.3.1 Configuration

Panels shall be L-shaped or otherwise configured to represent all of the wall elements. Panels shall be of the size necessary to demonstrate the acceptable level of workmanship for each type of masonry represented on the project. The minimum size of a straight panel or a leg of an L-shaped panel shall be 2.5 m by 1.8 m high.

1.3.2 Composition

Panels shall show full color range, texture, and bond pattern of the masonry work. The Contractor's method for mortar joint tooling; grouting of reinforced vertical cores, collar joints, bond beams, and lintels; positioning, securing, and lapping of reinforcing steel; positioning and lapping of joint reinforcement (including prefabricated corners); and cleaning of masonry work shall be demonstrated during the construction of the panels. Installation or application procedures for anchors, wall ties, glass block units, CMU control joints, brick expansion joints, insulation, flashing, brick soldier, row lock courses and weep holes shall be shown in the sample panels. The panels shall contain a masonry bonded corner that includes a bond beam corner. Panels shall show installation of electrical boxes and conduit. Panels that represent reinforced masonry shall contain a 600 mm by 600 mm opening placed at least 600 mm above the panel base and 600 mm away from all free edges, corners, and control joints. Required reinforcing shall be provided around this opening as well as at wall corners and control joints.

1.3.3 Construction Method

Where anchored veneer walls are required, the Contractor shall demonstrate and receive approval for the method of construction; i.e., either bring up the two wythes together or separately, with the insulation and appropriate ties placed within the specified tolerances across the cavity. Temporary provisions shall be demonstrated to preclude mortar or grout droppings in the cavity and to provide a clear open air space of the dimensions shown on the drawings. Where masonry is to be grouted, the Contractor shall demonstrate and receive approval on the method that will be used to bring up the masonry wythes; support the reinforcing bars; and grout cells, bond beams, lintels, and collar joints using the requirements specified herein. If sealer is specified to be applied to the masonry units, sealer shall be applied to the sample panels. Panels shall be built on a properly designed concrete foundation.

1.3.4 Usage

The completed panels shall be used as the standard of workmanship for the type of masonry represented. Masonry work shall not commence until the sample panel for that type of masonry construction has been completed and approved. Panels shall be protected from the weather and construction operations until the masonry work has been completed and approved. After completion of the work, the sample panels, including all foundation concrete, shall become the property of the Contractor and shall be removed from the construction site.

1.4 DELIVERY, HANDLING, AND STORAGE

Materials shall be delivered, handled, stored, and protected to avoid chipping, breakage, and contact with soil or contaminating material.

1.4.1 Masonry Units

Concrete masonry units shall be covered or protected from inclement weather and shall conform to the moisture content as specified in ASTM C 90when delivered to the jobsite. In addition, prefaced concrete units shall be stored with their finish surfaces covered. Prefabricated lintels shall be marked on top sides to show either the lintel schedule number or the number and size of top and bottom bars.

1.4.2 Reinforcement, Anchors, and Ties

Steel reinforcing bars, coated anchors, ties, and joint reinforcement shall be stored above the ground. Steel reinforcing bars and uncoated ties shall be free of loose mill scale and rust.

1.4.3 Cementitious Materials, Sand and Aggregates

Cementitious and other packaged materials shall be delivered in unopened containers, plainly marked and labeled with manufacturers' names and brands. Cementitious material shall be stored in dry, weathertight enclosures or be completely covered. Cement shall be handled in a manner that will prevent the inclusion of foreign materials and damage by water or dampness. Sand and aggregates shall be stored in a manner to prevent contamination or segregation.

PART 2 PRODUCTS

2.1 GENERAL REQUIREMENTS

The source of materials which will affect the appearance of the finished work shall not be changed after the work has started except with Contracting Officer's approval.

2.2 CLAY OR SHALE BRICK

Color range and texture of clay or shale brick shall be as indicated and shall conform to the approved sample. Grade SW shall be used for brick in contact with earth or grade and for all exterior work. Grade SW or MW shall be used in other brickwork. Brick shall be tested for efflorescence. Clay or shale brick units shall be delivered factory-blended to provide a uniform appearance and color range in the completed wall.

2.2.1 Solid Clay or Shale Brick

Solid clay or shale shall conform to ASTM C 216, Type FBS. Brick size

shall be modular and the nominal size of the brick used shall be 67 mm thick, 100 mm wide, and 200 mm long. Minimum compressive strength of the brick shall be 20 MPa.

2.2.2 Hollow Clay or Shale Brick

Hollow clay or shale brick shall conform to ASTM C 652, Type HBS. Brick size shall be modular and the nominal size of the brick used shall be 67 mm thick, 100 wide, and 200 long. Where vertical reinforcement is shown in hollow brick, the minimum cell dimension shall be 64 mm (2-1/2 inches) and the units shall be designed to provide precise vertical alignment of the cells. Minimum compressive strength of the brick shall be 20.

2.3 CONCRETE BRICK

Concrete brick shall conform to ASTM C 55, Type I, Grade N. Concrete brick may be used where necessary for filling out in concrete masonry unit construction.

2.4 CONCRETE MASONRY UNITS (CMU)

Hollow and solid concrete masonry units shall conform to ASTM C 90, Type I, Lightweight and Normal weight. Cement shall have a low alkali content and be of one brand.

2.4.1 Aggregates

Lightweight aggregates and blends of lightweight and heavier aggregates in proportions used in producing the units, shall comply with the following requirements when tested for stain-producing iron compounds in accordance with ASTM C 641: by visual classification method, the iron stain deposited on the filter paper shall not exceed the "light stain" classification.

2.4.2 Kinds and Shapes

Units shall be modular in size and shall include closer, jamb, header, lintel, and bond beam units and special shapes and sizes to complete the work as indicated. In exposed interior masonry surfaces, units having a bullnose shall be used for vertical external corners except at door, window, and louver jambs. Radius of the bullnose shall be 25 mm (1 inch). Units used in exposed masonry surfaces in any one building shall have a uniform fine to medium texture and a uniform color.

2.5 PRECAST CONCRETE ITEMS

Trim, lintels, copings, splashblocks and door sills shall be factory-made units from a plant regularly engaged in producing precast concrete units. Unless otherwise indicated, concrete shall be 28 MPa (4000 psi) minimum conforming to Section 03300 CAST-IN-PLACE STRUCTURAL CONCRETE using 13 mm (1/2 inch) to No. 4 nominal-size coarse aggregate, and minimum reinforcement shall be the reinforcement required for handling of the units. Clearance of 20 mm shall be maintained between reinforcement and faces of units. Unless precast-concrete items have been subjected during manufacture to saturated-steam pressure of at least 827 kPa (120 psi) for at least 5 hours, the items, after casting, shall be either damp-cured for 24 hours or steam-cured and shall then be aged under cover for 28 days or longer. Cast-concrete members weighing over 35 kg shall have built-in loops of galvanized wire or other approved provisions for lifting and anchoring. Units shall have beds and joints at right angles to the face,

with sharp true arises and shall be cast with drip grooves on the underside where units overhang walls. Exposed-to-view surfaces shall be free of surface voids, spalls, cracks, and chipped or broken edges. Precast units exposed-to-view shall be of uniform appearance and color. Unless otherwise specified, units shall have a smooth dense finish. Prior to use, each item shall be wetted and inspected for crazing. Items showing evidence of dusting, spalling, crazing, or having surfaces treated with a protective coating will be rejected.

2.5.1 Lintels

Precast lintels, unless otherwise shown, shall be of a thickness equal to the wall and reinforced with two No. 4 bars for the full length. Top of lintels shall be labeled "TOP" or otherwise identified and each lintel shall be clearly marked to show location in the structure.

2.5.2 Sills and Copings

Sills and copings shall be cast with washes. Sills for windows having mullions shall be cast in sections with head joints at mullions and a 6 mm (1/4 inch) allowance for mortar joints. The ends of sills, except a 20 mm (3/4 inch) wide margin at exposed surfaces, shall be roughened for bond. Treads of door sills shall have rounded nosings.

2.6 STONE ITEMS

Stone for trim, sills, lintels, and copings shall be limestone, sandstone, or granite, and shall be cut to the design shown. Sandstone shall be standard grade, buff, gray, or buff brown, with a smooth finish free from clay pits and tool marks. Granite shall be a good commercial grade building granite of medium or moderately coarse grain, and a light or medium gray or light pink color, with a smooth machine finish on washes, 4-cut finish on treads, and 6-cut or equivalent machine finish on other exposed surfaces. Limestone shall be standard buff limestone with a smooth machine finish free from tool marks. Lintels, except when supported by a steel member, shall be 100 mm (4 inches) or more thick from face to back edge and of the depth required to support the masonry over the opening. Stone shall have beds and joints at right angles to the face, with sharp, true arises. Copings and sills shall be provided with washes, and where overhanging the walls, shall have drips cut on the underside.

2.7 MORTAR

Mortar shall be Type S in accordance with the proportion specification of ASTM C 270 except Type S cement-lime mortar proportions shall be 1 part cement, 1/2 part lime and 4-1/2 parts aggregate; when masonry cement ASTM C 91 is used the maximum air content shall be limited to 12 percent and performance equal to cement-lime mortar shall be verified. Evaluation of performance shall be based on ASTM C 780 and ASTM C 1072. Mortar for prefaced concrete masonry unit wainscots shall contain aggregates with 100 percent passing the 2.36 mm sieve and 95 percent passing the 1.18 mm sieve. Cement shall have a low alkali content and be of one brand. Aggregates shall be from one source.

2.7.1 Admixtures

In cold weather, a non-chloride based accelerating admixture may be used subject to approval. Accelerating admixture shall be non-corrosive, shall contain less than 0.2 percent chlorides, and shall conform to ASTM C 494,

Type C.

2.7.2 Coloring

Mortar coloring shall be added to the mortar used for exposed masonry surfaces to produce a uniform color matching color indicated. Mortar coloring shall not exceed 3 percent of the weight of cement for carbon black and ten percent of the weight of cement for all other pigments. Mortar coloring shall be chemically inert, of finely ground limeproof pigment, and furnished in accurately pre-measured and packaged units that can be added to a measured amount of cement.

2.8 GROUT

Grout shall conform to ASTM C 476. Cement used in grout shall have a low alkali content. Grout slump shall be between 200 and 250 mm. Grout shall be used subject to the limitations of Table III. Proportions shall not be changed and materials with different physical or chemical characteristics shall not be used in grout for the work unless additional evidence is furnished that the grout meets the specified requirements.

2.8.1 Admixtures

In cold weather, a non-chloride based accelerating admixture may be used subject to approval. Accelerating admixture shall be non-corrosive, shall contain less than 0.2 percent chlorides, and shall conform to ASTM C 494, Type C.

2.8.2 Grout Barriers

Grout barriers for vertical cores shall consist of fine mesh wire, fiberglass, or expanded metal.

2.9 ANCHORS, TIES, AND BAR POSITIONERS

Anchors and ties shall be fabricated without drips or crimps and shall be zinc-coated in accordance with ASTM A 153, Class B-2. Steel wire used for anchors and ties shall be fabricated from steel wire conforming to ASTM A 82. Anchors and ties shall be sized to provide a minimum of 16 mm mortar cover from either face.

2.9.1 Wire Mesh Ties

Wire mesh for tying 100 mm (4 inch) thick concrete masonry unit partitions to other intersecting masonry partitions shall be 13 mm (1/2 inch) mesh of minimum 16 gauge steel wire. Minimum lengths shall be not less than 300 mm.

2.9.2 Wall Ties

Wall ties shall be rectangular-shaped, fabricated of 5 mm (3/16 inch) diameter zinc-coated steel wire. Rectangular wall ties shall be no less than 100 mm (4 inches) wide. Wall ties may also be of a continuous type conforming to paragraph JOINT REINFORCEMENT. Adjustable type wall ties, if approved for use, shall consist of two essentially U-shaped elements fabricated of 5 mm (3/16 inch) diameter zinc-coated steel wire. Adjustable ties shall be of the double pintle to eye type and shall allow a maximum of 13 mm (1/2 inch) eccentricity between each element of the tie. Play between pintle and eye opening shall be not more than 2 mm (1/16 inch).

The pintle and eye elements shall be formed so that both can be in the same plane.

2.9.3 Dovetail Anchors

Dovetail anchors shall be of the flexible wire type, 5 mm (3/16 inch) diameter zinc-coated steel wire, triangular shaped, and attached to a 12 gauge or heavier steel dovetail section. These anchors shall be used for anchorage of veneer wythes or composite-wall facings extending over the face of concrete columns, beams, or walls. Cells within vertical planes of these anchors shall be filled solid with grout for full height of walls or partitions, or solid units may be used. Dovetail slots are specified in Section 03300 CAST-IN-PLACE STRUCTURAL CONCRETE.

2.9.4 Adjustable Anchors

Adjustable anchors shall be 5 mm (3/16 inch) diameter steel wire, triangular-shaped. Anchors attached to steel shall be 8 mm (5/16 inch) diameter steel bars placed to provide 2 mm (1/16 inch) play between flexible anchors and structural steel members. Spacers shall be welded to rods and columns. Equivalent welded-on steel anchor rods or shapes standard with the flexible-anchor manufacturer may be furnished when approved. Welds shall be cleaned and given one coat of zinc-rich touch up paint.

2.9.5 Bar Positioners

Bar positioners, used to prevent displacement of reinforcing bars during the course of construction, shall be factory fabricated from 9 gauge steel wire or equivalent, and coated with a hot-dip galvanized finish. Not more than one wire shall cross the cell.

2.10 JOINT REINFORCEMENT

Joint reinforcement shall be factory fabricated from steel wire conforming to ASTM A 82, welded construction. Tack welding will not be acceptable in reinforcement used for wall ties. Wire shall have zinc coating conforming to ASTM A 153, Class B-2. All wires shall be a minimum of 9 gauge. Reinforcement shall be ladder type design, having one longitudinal wire in the mortar bed of each face shell for hollow units and one wire for solid units. Joint reinforcement shall be placed a minimum of 16 mm cover from either face. The distance between crosswires shall not exceed 400 mm (16 inches). Joint reinforcement for straight runs shall be furnished in flat sections not less than 3 m (10 feet) long. Joint reinforcement shall be provided with factory formed corners and intersections. If approved for use, joint reinforcement may be furnished with adjustable wall tie features.

2.11 REINFORCING STEEL BARS AND RODS

Reinforcing steel bars and rods shall conform to ASTM A 615, Grade 60.

2.12 CONTROL JOINT KEYS

Control joint keys shall be a factory fabricated solid section of natural or synthetic rubber (or combination thereof) conforming to ASTM D 2000or polyvinyl chloride conforming to ASTM D 2287. The material shall be resistant to oils and solvents. The control joint key shall be provided with a solid shear section not less than 16 mm (5/8 inch) thick and 10 mm (3/8 inch) thick flanges, with a tolerance of plus or minus 2 mm (1/16

inch). The control joint key shall fit neatly, but without forcing, in masonry unit jamb sash grooves. The control joint key shall be flexible at a temperature of minus 34 degrees C (minus 30 degrees F) after five hours exposure, and shall have a durometer hardness of not less than 70 when tested in accordance with ASTM D 2240.

2.13 EXPANSION-JOINT MATERIALS

Backer rod and sealant shall be adequate to accommodate joint compression equal to 50 percent of the width of the joint. The backer rod shall be compressible rod stock of polyethylene foam, polyurethane foam, butyl rubber foam, or other flexible, nonabsorptive material as recommended by the sealant manufacturer. Sealant shall conform to Section 07920JOINT SEALING.

2.14 INSULATION

2.14.1 Rigid Board-Type Insulation

Rigid board-type insulation shall be extruded polystyrene, polyurethane, or polyisocyanurate. Polystyrene shall conform to ASTM C 578. Polyurethane or polyisocyanurate shall conform to ASTM C 1289, Type I, Class 2, faced with aluminum foil on both sides of the foam. The insulation shall be a standard product and shall be marked with not less than the manufacturer's trademark or name, the specification number, the permeance and R-values.

2.14.1.1 Insulation Thickness and Air Space

The cavity space shall allow for a maximum insulation thickness of 50 mm (2 inches) and a minimum air space of 20 mm (3/4 inch).

2.14.1.2 Aged R-Value

The insulation shall provide a minimum aged R-value of 5 for the overall thickness. The aged R-value shall be determined at 24 degrees C (75 degrees F) in accordance with the appropriate referenced specification. The stated R-value of the insulation shall be certified by an independent testing laboratory or certified by an independent Registered Professional Engineer if tests are conducted in the manufacturer's laboratory.

2.14.1.3 Recovered Material

Insulation shall contain the highest practicable percentage of recovered material derived from solid waste (but material reused in the manufacturing process cannot be counted toward the percentage of recovered material). Where two materials have the same price and performance, the one containing the higher recovered material content shall be provided. The polyurethane or polyisocyanurate foam shall have a minimum recovered material content of 9 percent by weight of the core material.

2.14.2 Insulation Adhesive

Insulation adhesive shall be specifically prepared to adhere the insulation to the masonry and, where applicable, to the thru-wall flashing. The adhesive shall not deleteriously affect the insulation, and shall have a record of satisfactory and proven performance for the conditions under which to be used.

2.15 FLASHING

Flashing shall be as specified in Section 07600 SHEET METALWORK, GENERAL.

2.16 WEEP HOLE VENTILATORS

Weephole ventilators shall be prefabricated aluminum grill type vents designed to prevent insect entry with maximum air entry. Ventilators shall be sized to match modular construction with a standard 10 mm (3/8 inch mortar joint.

PART 3 EXECUTION

3.1 ENVIRONMENTAL REQUIREMENTS

3.1.1 Hot Weather Installation

The following precautions shall be taken if masonry is erected when the ambient air temperature is more than 37 degrees C in the shade and the relative humidity is less than 50 percent. All masonry materials shall be shaded from direct sunlight; mortar beds shall be spread no more than 1.2 m ahead of masonry; masonry units shall be set within one minute of spreading mortar; and after erection, masonry shall be protected from direct exposure to wind and sun for 48 hours.

3.1.2 Cold Weather Installation

Before erecting masonry when ambient temperature or mean daily air temperature falls below 4 degrees C, a written statement of proposed cold weather construction procedures shall be submitted for approval. The following precautions shall be taken during all cold weather erection.

3.1.2.1 Preparation

Ice or snow formed on the masonry bed shall be thawed by the application of heat. Heat shall be applied carefully until the top surface of the masonry is dry to the touch. Sections of masonry deemed frozen and damaged shall be removed before continuing construction of those sections.

a. Air Temperature 4 to 0 degrees C. Sand or mixing water shall be heated to produce mortar temperatures between 4 degrees C and 49 degrees C.

b. Air Temperature 0 to minus 4 degrees C. Sand and mixing water shall be heated to produce mortar temperatures between 4 degrees C and 49 degrees C. Temperature of mortar on boards shall be maintained above freezing.

c. Air Temperature minus 4 to minus 7 degrees C. Sand and mixing water shall be heated to provide mortar temperatures between 4 degrees C and 49 degrees C. Temperature of mortar on boards shall be maintained above freezing. Sources of heat shall be used on both sides of walls under construction. Windbreaks shall be employed when wind is in excess of 24 km/hour.

d. Air Temperature minus 7 degrees C and below. Sand and mixing water shall be heated to provide mortar temperatures between 4 degrees C and 49 degrees C. Enclosure and auxiliary heat shall be provided to maintain air temperature above 0 degrees C. Temperature of units when laid shall not be less than minus 7

degrees C.

3.1.2.2 Completed Masonry and Masonry Not Being Worked On

a. Mean daily air temperature 4 degrees C to 0 degrees C. Masonry shall be protected from rain or snow for 24 hours by covering with weather-resistive membrane.

b. Mean daily air temperature 0 degrees C to minus 4 degrees C. Masonry shall be completely covered with weather-resistant membrane for 24 hours.

c. Mean Daily Air Temperature minus 4 degrees C to minus 7 degrees C. Masonry shall be completely covered with insulating blankets or equally protected for 24 hours.

d. Mean Daily Temperature minus 7 degrees C and Below. Masonry temperature shall be maintained above 0 degrees C for 24 hours by enclosure and supplementary heat, by electric heating blankets, infrared heat lamps, or other approved methods.

3.2 LAYING MASONRY UNITS

Masonry units shall be laid in the indicated bond pattern. Facing courses shall be level with back-up courses, unless the use of adjustable ties has been approved in which case the tolerances shall be plus or minus 13 mm. Each unit shall be adjusted to its final position while mortar is still soft and plastic. Units that have been disturbed after the mortar has stiffened shall be removed, cleaned, and relaid with fresh mortar. Air spaces, cavities, chases, expansion joints, and spaces to be grouted shall be kept free from mortar and other debris. Units used in exposed masonry surfaces shall be free from chipped edges or other imperfections detracting from the appearance of the finished work. Vertical joints shall be kept plumb. Units being laid and surfaces to receive units shall be free of water film and frost. Solid units shall be laid in a nonfurrowed full bed of mortar. Mortar for veneer wythes shall be beveled and sloped toward the center of the wythe from the cavity side. Units shall be shoved into place so that the vertical joints are tight. Vertical joints of brick and the vertical face shells of concrete masonry units, except where indicated at control, expansion, and isolation joints, shall be completely filled with mortar. Mortar will be permitted to protrude up to 13 mm into the space or cells to be grouted. Means shall be provided to prevent mortar from dropping into the space below. In double wythe construction, the inner wythe may be brought up not more than 400 mm ahead of the outer wythe. Collar joints shall be filled with mortar or grout during the laying of the facing wythe, and filling shall not lag the laying of the facing wythe by more than 200 mm.

3.2.1 Surface Preparation

Surfaces upon which masonry is placed shall be cleaned of laitance, dust, dirt, oil, organic matter, or other foreign materials and shall be slightly roughened to provide a surface texture with a depth of at least 3 mm. Sandblasting shall be used, if necessary, to remove laitance from pores and to expose the aggregate.

3.2.2 Forms and Shores

Forms and shores shall be sufficiently rigid to prevent deflections which

may result in cracking or other damage to supported masonry and sufficiently tight to prevent leakage of mortar and grout. Supporting forms and shores shall not be removed in less than 10 days.

3.2.3 Concrete Masonry Units

Units in piers, pilasters, columns, starting courses on footings, solid foundation walls, lintels, and beams, and where cells are to be filled with grout shall be full bedded in mortar under both face shells and webs. Other units shall be full bedded under both face shells. Head joints shall be filled solidly with mortar for a distance in from the face of the unit not less than the thickness of the face shell. Foundation walls below grade shall be grouted solid. Jamb units shall be of the shapes and sizes to conform with wall units. Solid units may be incorporated in the masonry work where necessary to fill out at corners, gable slopes, and elsewhere as approved. Double walls shall be stiffened at wall-mounted plumbing fixtures by use of strap anchors, two above each fixture and two below each fixture, located to avoid pipe runs, and extending from center to center of the double wall. Walls and partitions shall be adequately reinforced for support of wall-hung plumbing fixtures when chair carriers are not specified.

3.2.4 Clay or Shale Brick Units

Brick facing shall be laid with the better face exposed. Brick shall be laid in running bond with each course bonded at corners, unless otherwise indicated. Molded brick shall be laid with the frog side down. Brick that is cored, recessed, or has other deformations may be used in sills, treads, soldier courses, except where deformations will be exposed to view.

3.2.4.1 Wetting of Units

Wetting of clay, shale brick, or hollow brick units having an initial rate of absorption of more than 0.155 gm per minute per square cm (1 gm per minute per square inch) of bed surface shall be in conformance with ASTM C 67. The method of wetting shall ensure that each unit is nearly saturated but surface dry when laid.

3.2.4.2 Solid Units

Bed, head, and collar joints shall be completely filled with mortar.

3.2.4.3 Hollow Units

Hollow units shall be laid as specified for concrete masonry units.

3.2.5 Tolerances

Masonry shall be laid plumb, true to line, with courses level. Bond pattern shall be kept plumb throughout. Corners shall be square unless noted otherwise. Except for walls constructed of prefaced concrete masonry units, masonry shall be laid within the following tolerances (plus or minus unless otherwise noted):

TABLE II

TOLERANCES

Variation from the plumb in the lines

TOLERANCES

and surfaces of columns, walls and arises	
In adjacent masonry units	3 mm
In 3 m	6 mm
In 6 m	10 mm
In 12 m or more	13 mm
Variations from the plumb for external corners, expansion joints, and other conspicuous lines	
In 6 m	6 mm
In 12 m or more	13 mm
Variations from the level for exposed lintels, sills, parapets, horizontal grooves, and other conspicuous lines	
In 6 m	6 mm
In 12 m or more	13 mm
Variation from level for bed joints and top surfaces of bearing walls	
In 3 m	6 mm
In 12 m or more	13 mm
Variations from horizontal lines	
In 3 m	6 mm
In 6 m	10 mm
In 12 m or more	13 mm
Variations in cross sectional dimensions of columns and in thickness of walls	
Minus	6 mm
Plus	13 mm

3.2.6 Cutting and Fitting

Full units of the proper size shall be used wherever possible, in lieu of cut units. Cutting and fitting, including that required to accommodate the work of others, shall be done by masonry mechanics using power masonry saws. Concrete masonry units may be wet or dry cut. Wet cut units, before being placed in the work, shall be dried to the same surface-dry appearance as uncut units being laid in the wall. Cut edges shall be clean, true and sharp. Openings in the masonry shall be made carefully so that wall plates, cover plates or escutcheons required by the installation will completely conceal the openings and will have bottoms parallel with the masonry bed joints. Reinforced masonry lintels shall be provided above openings over 300 mm wide for pipes, ducts, cable trays, and other wall

penetrations, unless steel sleeves are used.

3.2.7 Jointing

Joints shall be tooled when the mortar is thumbprint hard. Horizontal joints shall be tooled last. Joints shall be brushed to remove all loose and excess mortar. Mortar joints shall be finished as follows:

3.2.7.1 Flush Joints

Joints in concealed masonry surfaces and joints at electrical outlet boxes in wet areas shall be flush cut. Flush cut joints shall be made by cutting off the mortar flush with the face of the wall. Joints in unparged masonry walls below grade shall be pointed tight. Flush joints for architectural units, such as fluted units, shall completely fill both the head and bed joints.

3.2.7.2 Tooled Joints

Joints in exposed exterior and interior masonry surfaces shall be tooled slightly concave. Joints shall be tooled with a jointer slightly larger than the joint width so that complete contact is made along the edges of the unit. Tooling shall be performed so that the mortar is compressed and the joint surface is sealed. Jointer of sufficient length shall be used to obtain a straight and true mortar joint.

3.2.7.3 Door and Window Frame Joints

On the exposed interior side of exterior frames, joints between frames and abutting masonry walls shall be raked to a depth of 10 mm. On the exterior side of exterior frames, joints between frames and abutting masonry walls shall be raked to a depth of 10 mm.

3.2.8 Joint Widths

Joint widths shall be as follows:

3.2.8.1 Concrete Masonry Units

Concrete masonry units shall have 10 mm (3/8 inch) joints, except for prefaced concrete masonry units.

3.2.8.2 Brick

Brick joint widths shall have 10 mm joints. Brick expansion joint widths shall be as shown.

3.2.9 Embedded Items

Spaces around built-in items shall be filled with mortar. Openings around flush-mount electrical outlet boxes in wet locations shall be pointed with mortar. Anchors, ties, wall plugs, accessories, flashing, pipe sleeves and other items required to be built-in shall be embedded as the masonry work progresses. Anchors, ties and joint reinforcement shall be fully embedded in the mortar. Cells receiving anchor bolts and cells of the first course below bearing plates shall be filled with grout.

3.2.10 Unfinished Work

Unfinished work shall be stepped back for joining with new work. Toothing may be resorted to only when specifically approved. Loose mortar shall be removed and the exposed joints shall be thoroughly cleaned before laying new work.

3.2.11 Masonry Wall Intersections

Each course shall be masonry bonded at corners and elsewhere as shown. Masonry walls shall be anchored or tied together at corners and intersections with bond beam reinforcement and prefabricated corner or tee pieces of joint reinforcement.

3.2.12 Partitions

Partitions shall be continuous from floor to underside of floor or roof deck where shown. Openings in firewalls around joists or other structural members shall be filled as indicated or approved. Where suspended ceilings on both sides of partitions are indicated, the partitions other than those shown to be continuous may be stopped approximately 100 mm (4 inches) above the ceiling level. An isolation joint shall be placed in the intersection between partitions and structural or exterior walls as shown. Interior partitions having 100 mm (4 inch) nominal thick units shall be tied to intersecting partitions of 100 mm (4 inch) units, 125 mm into partitions of 150 mm (6 inch) units, and 175 into partitions of 200 mm (8 inch) or thicker units. Cells within vertical plane of ties shall be filled solid with grout for full height of partition or solid masonry units may be used. Interior partitions having masonry walls over 100 mm (4 inches) thick shall be tied together with joint reinforcement. Partitions containing joint reinforcement shall be provided with prefabricated pieces at corners and intersections or partitions.

3.3 ANCHORED VENEER CONSTRUCTION

The inner and outer wythes shall be completely separated by a continuous airspace as shown on the drawings. Both the inner and the outer wythes shall be laid up together except when adjustable joint reinforcement assemblies are approved for use. When both wythes are not brought up together, through-wall flashings shall be protected from damage until they are fully enclosed in the wall. The airspace between the wythes shall be kept clear and free of mortar droppings by temporary wood strips laid on the wall ties and carefully lifted out before placing the next row of ties. A coarse gravel or pre-formed drainage material shall be placed behind the weep holes in the cavity to a minimum depth of 100 mm of coarse aggregate or 250 mm of drainage material to keep mortar droppings from plugging the weep holes.

3.4 WEEP HOLES

Weep holes shall be provided not more than 600 mm on centers in mortar joints of the exterior wythe above wall flashing, over foundations, bond beams, and any other horizontal interruptions of the cavity. Weep holes shall be formed by placing short lengths of well-greased No. 10, 8 mm (5/16 inch) nominal diameter, braided cotton sash cord in the mortar and withdrawing the cords after the wall has been completed. Other approved methods may be used for providing weep holes. Weep holes shall be kept free of mortar and other obstructions.

3.5 COMPOSITE WALLS

Masonry wythes shall be tied together with joint reinforcement or with unit wall ties. Facing shall be anchored to concrete backing with wire dovetail anchors set in slots built in the face of the concrete as specified in Section 03300 CAST-IN-PLACE STRUCTURAL CONCRETE. The facing wythe shall be anchored or tied to the backup at a maximum spacing of 400 mm (16 inches) on center vertically and 600 mm (24 inches) on center horizontally. Unit ties shall be spaced not over 600 mm (24 inches) on centers horizontally, in courses not over 400 mm (16 inches) apart vertically, staggered in alternate courses. Ties shall be laid not closer than 16 mm to either masonry face. Ties shall not extend through control joints. Collar joints between masonry facing and masonry backup shall be filled solidly with grout.

3.6 MORTAR

Mortar shall be mixed in a mechanically operated mortar mixer for at least 3 minutes, but not more than 5 minutes. Measurement of ingredients for mortar shall be by volume. Ingredients not in containers, such as sand, shall be accurately measured by the use of measuring boxes. Water shall be mixed with the dry ingredients in sufficient amount to provide a workable mixture which will adhere to the vertical surfaces of masonry units. Mortar that has stiffened because of loss of water through evaporation shall be retempered by adding water to restore the proper consistency and workability. Mortar that has reached its initial set or that has not been used within 2-1/2 hours after mixing shall be discarded.

3.7 REINFORCING STEEL

Reinforcement shall be cleaned of loose, flaky rust, scale, grease, mortar, grout, or other coating which might destroy or reduce its bond prior to placing grout. Bars with kinks or bends not shown on the drawings shall not be used. Reinforcement shall be placed prior to grouting. Unless otherwise indicated, vertical wall reinforcement shall extend to within 50 mm of tops of walls.

3.7.1 Positioning Bars

Vertical bars shall be accurately placed within the cells at the positions indicated on the drawings. A minimum clearance of 13 mm shall be maintained between the bars and masonry units. Minimum clearance between parallel bars shall be one diameter of the reinforcement. Vertical reinforcing may be held in place using bar positioners located near the ends of each bar and at intermediate intervals of not more than 192 diameters of the reinforcement. Column and pilaster ties shall be wired in position around the vertical steel. Ties shall be in contact with the vertical reinforcement and shall not be placed in horizontal bed joints.

3.7.2 Splices

Bars shall be lapped a minimum of 48 diameters of the reinforcement. Welded or mechanical connections shall develop at least 125 percent of the specified yield strength of the reinforcement.

3.8 JOINT REINFORCEMENT

Joint reinforcement shall be installed at 400 mm (16 inches) on center or as indicated. Reinforcement shall be lapped not less than 150 mm. Prefabricated sections shall be installed at corners and wall intersections. The longitudinal wires of joint reinforcement shall be

placed to provide not less than 16 mm cover to either face of the unit.

3.9 PLACING GROUT

Cells containing reinforcing bars shall be filled with grout. Hollow masonry units in walls or partitions supporting plumbing, heating, or other mechanical fixtures, voids at door and window jambs, and other indicated spaces shall be filled solid with grout. Cells under lintel bearings on each side of openings shall be filled solid with grout for full height of openings. Walls below grade, lintels, and bond beams shall be filled solid with grout. Units other than open end units may require grouting each course to preclude voids in the units. Grout not in place within 1-1/2 hours after water is first added to the batch shall be discarded. Sufficient time shall be allowed between grout lifts to preclude displacement or cracking of face shells of masonry units. If blowouts, flowouts, misalignment, or cracking of face shells should occur during construction, the wall shall be torn down and rebuilt.

3.9.1 Vertical Grout Barriers for Fully Grouted Walls

Grout barriers shall be provided not more than 10 m apart, or as required, to limit the horizontal flow of grout for each pour.

3.9.2 Horizontal Grout Barriers

Grout barriers shall be embedded in mortar below cells of hollow units receiving grout.

3.9.3 Grout Holes and Cleanouts

3.9.3.1 Grout Holes

Grouting holes shall be provided in slabs, spandrel beams, and other in-place overhead construction. Holes shall be located over vertical reinforcing bars or as required to facilitate grout fill in bond beams. Additional openings spaced not more than 400 mm (16 inches) on centers shall be provided where grouting of all hollow unit masonry is indicated. Openings shall not be less than 100 mm in diameter or 75 by 100 mm in horizontal dimensions. Upon completion of grouting operations, grouting holes shall be plugged and finished to match surrounding surfaces.

3.9.3.2 Cleanouts for Hollow Unit Masonry Construction

Cleanout holes shall be provided at the bottom of every pour in cores containing vertical reinforcement when the height of the grout pour exceeds 1.5 m. Where all cells are to be grouted, cleanout courses shall be constructed using bond beam units in an inverted position to permit cleaning of all cells. Cleanout holes shall be provided at a maximum spacing of 800 mm (32 inches) where all cells are to be filled with grout. A new series of cleanouts shall be established if grouting operations are stopped for more than 4 hours. Cleanouts shall not be less than 75 by 100 mm openings cut from one face shell. Manufacturer's standard cutout units may be used at the Contractor's option. Cleanout holes shall not be closed until masonry work, reinforcement, and final cleaning of the grout spaces have been completed and inspected. For walls which will be exposed to view, cleanout holes shall be closed in an approved manner to match surrounding masonry.

3.9.3.3 Cleanouts for Solid Unit Masonry Construction

Cleanouts for construction of walls consisting of a grout filled cavity between solid masonry wythes shall be provided at the bottom of every pour by omitting every other masonry unit from one wythe. A new series of cleanouts shall be established if grouting operations are stopped for more than 4 hours. Cleanout holes shall not be plugged until masonry work, reinforcement, and final cleaning of the grout spaces have been completed and inspected. For walls which will be exposed to view, cleanout holes shall be closed in an approved manner to match surrounding masonry.

3.9.4 Grouting Equipment

3.9.4.1 Grout Pumps

Pumping through aluminum tubes will not be permitted. Pumps shall be operated to produce a continuous stream of grout without air pockets, segregation, or contamination. Upon completion of each day's pumping, waste materials and debris shall be removed from the equipment, and disposed of outside the masonry.

3.9.4.2 Vibrators

Internal vibrators shall maintain a speed of not less than 5,000 impulses per minute when submerged in the grout. At least one spare vibrator shall be maintained at the site at all times. Vibrators shall be applied at uniformly spaced points not further apart than the visible effectiveness of the machine. Duration of vibration shall be limited to time necessary to produce satisfactory consolidation without causing segregation.

3.9.5 Grout Placement

Masonry shall be laid to the top of a pour before placing grout. Grout shall not be placed in two-wythe solid unit masonry cavity until mortar joints have set for at least 3 days during hot weather and 5 days during cold damp weather. Grout shall not be placed in hollow unit masonry until mortar joints have set for at least 24 hours. Grout shall be placed using a hand bucket, concrete hopper, or grout pump to completely fill the grout spaces without segregation of the aggregates. Vibrators shall not be inserted into lower pours that are in a semi-solidified state. The height of grout pours and type of grout used shall be limited by the dimensions of grout spaces as indicated in Table III. Low-lift grout methods may be used on pours up to and including 1.5 m in height. High-lift grout methods shall be used on pours exceeding 1.5 m in height.

3.9.5.1 Low-Lift Method

Grout shall be placed at a rate that will not cause displacement of the masonry due to hydrostatic pressure of the grout. Mortar protruding more than 13 mm into the grout space shall be removed before beginning the grouting operation. Grout pours 300 mm or less in height shall be consolidated by mechanical vibration or by puddling. Grout pours over 300 mm in height shall be consolidated by mechanical vibration and reconsolidated by mechanical vibration after initial water loss and settlement has occurred. Vibrators shall not be inserted into lower pours that are in a semi-solidified state. Low-lift grout shall be used subject to the limitations of Table III.

3.9.5.2 High-Lift Method

Mortar droppings shall be cleaned from the bottom of the grout space and from reinforcing steel. Mortar protruding more than 6 mm into the grout space shall be removed by dislodging the projections with a rod or stick as the work progresses. Reinforcing, bolts, and embedded connections shall be rigidly held in position before grouting is started. CMU units shall not be pre-wetted. Grout, from the mixer to the point of deposit in the grout space shall be placed as rapidly as practical by pumping and placing methods which will prevent segregation of the mix and cause a minimum of grout splatter on reinforcing and masonry surfaces not being immediately encased in the grout lift. The individual lifts of grout shall be limited to 1.2 m in height. The first lift of grout shall be placed to a uniform height within the pour section and vibrated thoroughly to fill all voids. This first vibration shall follow immediately behind the pouring of the grout using an approved mechanical vibrator. After a waiting period sufficient to permit the grout to become plastic, but before it has taken any set, the succeeding lift shall be poured and vibrated 300 to 450 mm into the preceding lift. If the placing of the succeeding lift is going to be delayed beyond the period of workability of the preceding, each lift shall be reconsolidated by reworking with a second vibrator as soon as the grout has taken its settlement shrinkage. The waiting, pouring, and reconsolidation steps shall be repeated until the top of the pour is reached. The top lift shall be reconsolidated after the required waiting period. The high-lift grouting of any section of wall between vertical grout barriers shall be completed to the top of a pour in one working day unless a new series of cleanout holes is established and the resulting horizontal construction joint cleaned. High-lift grout shall be used subject to the limitations in Table III.

TABLE III

POUR HEIGHT AND TYPE OF GROUT FOR VARIOUS GROUT SPACE DIMENSIONS

Maximum Grout Pour Height (m) (4)	Grout Type	Grouting Procedure	Minimum Dimensions of the Total Clear Areas Within Grout Spaces and Cells (mm) (1,2)	
			Multiwythe Masonry (3)	Hollow-unit Masonry
0.3	Fine	Low Lift	20	40 x 50
1.5	Fine	Low Lift	50	50 x 75
2.4	Fine	High Lift	50	50 x 75
3.6	Fine	High Lift	65	65 x 75
7.3	Fine	High Lift	75	75 x 75
0.3	Coarse	Low Lift	40	40 x 75
1.5	Coarse	Low Lift	50	65 x 75
2.4	Coarse	High Lift	50	75 x 75
3.6	Coarse	High Lift	65	75 x 75
7.3	Coarse	High Lift	75	75 x 100

Notes:

(1) The actual grout space or cell dimension must be larger than the sum of the following items:
a) The required minimum dimensions of total clear areas given in the table above;
b) The width of any mortar projections within the space;
c) The horizontal projections of the diameters of the horizontal reinforcing bars within a cross section of the grout space or cell.

(2) The minimum dimensions of the total clear areas shall be made up of one or more open areas, with at least one area being 20 mm or greater in width.

(3) For grouting spaces between masonry wythes.

(4) Where only cells of hollow masonry units containing reinforcement are grouted, the maximum height of the pour shall not exceed the distance between horizontal bond beams.

3.10 BOND BEAMS

Bond beams shall be filled with grout and reinforced as indicated on the drawings. Grout barriers shall be installed under bond beam units to retain the grout as required. Reinforcement shall be continuous, including around corners, except through control joints or expansion joints, unless otherwise indicated on the drawings. Where splices are required for continuity, reinforcement shall be lapped 48 bar diameters. A minimum clearance of 13 mm shall be maintained between reinforcement and interior faces of units.

3.11 CONTROL JOINTS

Control joints shall be provided as indicated and shall be constructed by using special control-joint units or sash jamb units with control joint key in accordance with the details shown on the drawings. Sash jamb units shall have a 19 by 19 mm (3/4 by 3/4 inch) groove near the center at end of each unit. The vertical mortar joint at control joint locations shall be continuous, including through all bond beams. This shall be accomplished by utilizing half blocks in alternating courses on each side of the joint. The control joint key shall be interrupted in courses containing continuous bond beam steel. In single wythe exterior masonry walls, the exterior control joints shall be raked to a depth of 20 mm; backer rod and sealant shall be installed in accordance with Section 07900 JOINT SEALING. Exposed interior control joints shall be raked to a depth of 6 mm. Concealed control joints shall be flush cut.

3.12 BRICK EXPANSION JOINTS AND CONCRETE MASONRY VENEER JOINTS

Brick expansion joints and concrete masonry veneer joints shall be provided and constructed as shown on the drawings. Joints shall be kept free of mortar and other debris.

3.13 SHELF ANGLES

Shelf angles shall be adjusted as required to keep the masonry level and at the proper elevation. Shelf angles shall be galvanized. Shelf angles shall be provided in sections not longer than 3 m and installed with a 6 mm gap between sections. Shelf angles shall be mitered and welded at building corners with each angle not shorter than 1.2 m, unless limited by wall configuration.

3.14 LINTELS

3.14.1 Masonry Lintels

Masonry lintels shall be constructed with lintel units filled solid with grout in all courses and reinforced with a minimum of two No. 4 bars in the

bottom course unless otherwise indicated on the drawings. Lintel reinforcement shall extend beyond each side of masonry opening 40 bar diameters or 600 mm, whichever is greater. Reinforcing bars shall be supported in place prior to grouting and shall be located 15 mm above the bottom inside surface of the lintel unit.

3.14.2 Precast Concrete and Steel Lintels

Precast concrete and steel lintels shall be as shown on the drawings. Lintels shall be set in a full bed of mortar with faces plumb and true. Steel and precast lintels shall have a minimum bearing length of 200 mm (8 inches) unless otherwise indicated on the drawings.

3.15 SILLS AND COPINGS

Sills and copings shall be set in a full bed of mortar with faces plumb and true.

3.16 ANCHORAGE TO CONCRETE AND STRUCTURAL STEEL

3.16.1 Anchorage to Concrete

Anchorage of masonry to the face of concrete columns, beams, or walls shall be with dovetail anchors spaced not over 400 mm (16 inches) on centers vertically and 600 mm (24 inches) on center horizontally.

3.16.2 Anchorage to Structural Steel

Masonry shall be anchored to vertical structural steel framing with adjustable steel wire anchors spaced not over 400 mm (16 inches) on centers vertically, and if applicable, not over 600 mm (24 inches) on centers horizontally.

3.17 PARGING

The outside face of below-grade exterior concrete-masonry unit walls enclosing usable rooms and spaces, except crawl spaces, shall be parged with type S mortar. Parging shall not be less than 13 mm thick troweled to a smooth dense surface so as to provide a continuous unbroken shield from top of footings to a line 150 mm below adjacent finish grade, unless otherwise indicated. Parging shall be coved at junction of wall and footing. Parging shall be damp-cured for 48 hours or more before backfilling. Parging shall be protected from freezing temperatures until hardened.

3.18 INSULATION

Anchored veneer walls shall be insulated, where shown, by installing board-type insulation on the cavity side of the inner wythe. Board type insulation shall be applied directly to the masonry or thru-wall flashing with adhesive. Insulation shall be neatly fitted between obstructions without impaling of insulation on ties or anchors. The insulation shall be applied in parallel courses with vertical joints breaking midway over the course below and shall be applied in moderate contact with adjoining units without forcing, and shall be cut to fit neatly against adjoining surfaces.

3.19 POINTING AND CLEANING

After mortar joints have attained their initial set, but prior to hardening, mortar and grout daubs or splashings shall be completely removed from masonry-unit surfaces that will be exposed or painted. Before completion of the work, defects in joints of masonry to be exposed or painted shall be raked out as necessary, filled with mortar, and tooled to match existing joints. Immediately after grout work is completed, scum and stains which have percolated through the masonry work shall be removed using a high pressure stream of water and a stiff bristled brush. Masonry surfaces shall not be cleaned, other than removing excess surface mortar, until mortar in joints has hardened. Masonry surfaces shall be left clean, free of mortar daubs, dirt, stain, and discoloration, including scum from cleaning operations, and with tight mortar joints throughout. Metal tools and metal brushes shall not be used for cleaning.

3.19.1 Concrete Masonry Unit and Concrete Brick Surfaces

Exposed concrete masonry unit and concrete brick surfaces shall be dry-brushed at the end of each day's work and after any required pointing, using stiff-fiber bristled brushes.

3.19.2 Clay or Shale Brick Surfaces

Exposed clay or shale brick masonry surfaces shall be cleaned as necessary to obtain surfaces free of stain, dirt, mortar and grout daubs, efflorescence, and discoloration or scum from cleaning operations. After cleaning, the sample panel of similar material shall be examined for discoloration or stain as a result of cleaning. If the sample panel is discolored or stained, the method of cleaning shall be changed to assure that the masonry surfaces in the structure will not be adversely affected. The exposed masonry surfaces shall be water-soaked and then cleaned with a solution proportioned 30 milliliters trisodium phosphate and 30 milliliters laundry detergent to 1 liter of water or cleaned with a proprietary masonry cleaning agent specifically recommended for the color and texture by the clay products manufacturer. The solution shall be applied with stiff fiber brushes, followed immediately by thorough rinsing with clean water. Proprietary cleaning agents shall be used in conformance with the cleaning product manufacturer's printed recommendations. Efflorescence shall be removed in conformance with the brick manufacturer's recommendations.

3.20 BEARING PLATES

Bearing plates for beams, joists, joist girders and similar structural members shall be set to the proper line and elevation with damp-pack bedding mortar, except where non-shrink grout is indicated. Bedding mortar and non-shrink grout shall be as specified in Section 03300CAST-IN-PLACE STRUCTURAL CONCRETE.

3.21 PROTECTION

Facing materials shall be protected against staining. Top of walls shall be covered with nonstaining waterproof covering or membrane when work is not in progress. Covering of the top of the unfinished walls shall continue until the wall is waterproofed with a complete roof or parapet system. Covering shall extend a minimum of 600 mm down on each side of the wall and shall be held securely in place. Before starting or resuming, top surface of masonry in place shall be cleaned of loose mortar and foreign material.

3.22 TEST REPORTS

3.22.1 Field Testing of Mortar

At least three specimens of mortar shall be taken each day. A layer of mortar 13 to 16 mm thick shall be spread on the masonry units and allowed to stand for one minute. The specimens shall then be prepared and tested for compressive strength in accordance with ASTM C 780.

3.22.2 Field Testing of Grout

Field sampling and testing of grout shall be in accordance with the applicable provisions of ASTM C 1019. A minimum of three specimens of grout per day shall be sampled and tested. Each specimen shall have a minimum ultimate compressive strength of 13.8 MPa at 28 days.

3.22.3 Efflorescence Test

Brick which will be exposed to weathering shall be tested for efflorescence. Tests shall be scheduled far enough in advance of starting masonry work to permit retesting if necessary. Sampling and testing shall conform to the applicable provisions of ASTM C 67. Units meeting the definition of "effloresced" will be subjected to rejection.

-- End of Section --

SECTION 04460

STONE CLADDING AND FIELDSTONE

PART 1 GENERAL

1.1 REFERENCES

The publications listed below form a part of this specification to the extent referenced. The publications are referred to in the text by basic designation only.

AMERICAN SOCIETY FOR TESTING AND MATERIALS (ASTM)

ASTM A36	Structural Steel.
ASTM A167	Stainless and Heat-Resisting Chromium-Nickel Steel Plate, Sheet, and Strip.
ASTM A500	Cold-Formed Welded and Seamless Carbon Steel Structural Tubing in Rounds and Shapes.
ASTM C97	Absorption and Bulk Specific Gravity of Dimension Stone.
ASTM C99	Modulus of Rupture of Dimension Stone.
ASTM C170	Compressive Strength of Dimension Stone.
ASTM C270	Mortar for Unit Masonry.
ASTM C615	Standard Specification for Granite Dimension Stone.
ASTM C880	Flexural Strength of Dimension Stone
ASTM C1201	Structural Performance of Exterior Dimension Stone Cladding Systems by Uniform Static Air Pressure Difference.
ASTM C1242	Standard Guide for Design, Selection, and Installation of Exterior Dimension Stone Anchors and Anchoring Systems.
ASTM E283	Rate of Air Leakage Through Exterior Windows, Curtain Walls, and Doors.
ASTM E331	Water Penetration of Exterior Windows, Curtain Walls, and Doors by Uniform Static Air Pressure Difference.
	ASTM E699 - Criteria for Evaluation of Agencies Involved in Testing, Quality Assurance, and Evaluating Building Components in Accordance with Test Methods

Promulgated by ASTM Committee E-6.

1.2 SUBMITTALS

Government approval is required for submittals with a "GA" designation; submittals having an "FIO" designation are for information only. The following shall be submitted in accordance with Section 01330: SUBMITTAL PROCEDURES:

SD-01 Data

Design Analysis; GA|ED.

Design analysis shall be signed by a Registered Professional Engineer. The design analysis shall inclued a list of the design loads and complete calculations for the stone cladding support system including all components and connections.

Stone Cladding Support System; GA|ED

Drawings, specifications and other data as necessary to clearly describe design, materials, sizes, layouts, construction details, fastener sizes and spacings, and erection procedures.

SD-04 Drawings

Stone Cladding; GA|ED.

Indicate piece sizes, quantities, and coordination with adjacent work. Shop drawings shall show all granite required, giving all overall piece size and sections through each condition. Where required, full sized sections shall be drawn to show curved or molded sections. All anchoring shall be defined and anchors located. Size and shape of anchors shall be indicated on shop drawings. Each stone shall be numbered on the shop drawings. No fabrication shall begin until shop drawings are approved. Deviations from the Bid Documents shall be clearly noted on the shop drawings.

Granite Fieldstone; GA|ED.

Indicate quantities and coordination with adjacent work. All anchoring shall be defined and anchors located.

SD-09 Reports

Testing; FIO;AR.

Submit test reports on preliminary test data on specified or proposed granites for approval. These reports shall be indicative of the granite to be used on the project. Testing of current production is specified in the quality control article of this section.

SD-13 Certificates

Stone Cladding; FIO;AR. Granite Fieldstone; FIO;AR.

Submit a letter of certification from the granite fabricator, stating the material being furnished is the specified material and there are sufficient reserves available to supply the project and furnish replacements if needed.

SD-14 Samples

Stone Cladding; GA|ED.

A minimum of 2 each, 300 mm x 300 mm in size, in each color and finish specified shall be submitted for the Architect's approval. In the case of more variegated granites, sufficient number of samples shall be submitted to show the full range of color and markings to be expected. If necessary, color photographs may accompany sample submittals. If samples are rejected, new samples shall be submitted until approved. No fabrication shall begin until all samples are approved.

Granite Fieldstone; GA|ED.

One portable panel, 600 mm x 600 mm, showing range of stone colors.

1.3 GENERAL REQUIREMENTS for STONE CLADDING

a. Design, fabricate, and install dimension stonework to withstand loads from wind, gravity, movement of building structure, thermally induced movement and to resist deterioration under conditions of normal use including exposure to weather, without failure.

b. Provide dimension stonework that is designed, fabricated, and installed based on the following safety factors applied to the stone's average ultimate strength, as established by test, to determine allowable working stresses.

c. Safety factor for granite is 3 for uniform and concentrated loads and 4 for anchorage components.

d. Provide hand set or field installed anchoring system, including connections to the building structure capable of sustaining forces generated by gravity loads, wind loads, and stresses included by thermal movement, acting separately or in combination, without exceeding allowable working stresses of stone, determined by dividing the stone's average ultimate strength, as established by test, by the stone's safety factor.

e. Provide stone cladding system in the form of either a prefabricated panel system or hand set stone over mechanical grid system, complying with the following requirements:

1. Wind Loads: 1700 Pa.
2. Thermal Movement/Temperature Range: 70 degrees C.
3. Horizontal Building Movement: 15 mm.

f. Contractor shall include building into the masonry equipment and materials furnished through other divisions such as lintels, steel framing, shelf angles, anchors, sleeves, thimbles, piping, flashings, and other miscellaneous items, and shall also be required to do the cutting and patching of masonry where necessary to accommodate work of other trades, all as hereinafter specified, shown on plans, or reasonably implied in either, providing a complete job.

1.4 QUALITY ASSURANCE for STONE CLADDING

1.4.1 Single Source Responsibility for Stone Cladding System:

Engage a qualified installer for stone cladding system to assume complete responsibility for design, fabrication, and installation of stone cladding system to comply with specified requirements.

1.4.2 Single Source Responsibility for Stone

Obtain each color, grade, finish, type, and variety of stone from a single quarry. The quarry shall provide material of a consistent quality in appearance and physical properties, and include the capacity to cut and finish material without delaying the progress of the work.

1.5 QUALIFICATIONS for STONE CLADDING

1.5.1 Installer Qualifications

Engage an experienced installer who has completed stone cladding similar in material, design, and extent to that indicated for the project, that has resulted in construction, with a record of successful in-service performance.

1.5.2 Engineer Qualifications

Engage a professional engineer licensed to practice in the jurisdiction where the project is located and experienced in providing services for stone cladding systems similar in material, design, and extent to that indicated for the project. Design shall be in accordance with referenced ASTM Standards.

1.6 DELIVERY, STORAGE AND HANDLING

1.6.1 Packing of Finished Granite

Finished granite shall be carefully packed and loaded for shipment using all reasonable care and customary precautions against damage in transit. No material which may cause staining or discoloration shall be used for blocking or packing.

1.6.2 Receipt of Delivered Granite

Upon receipt at the site or storage yard, the granite shall be stacked on timber or platforms at least 100 mm above the ground. Extreme care shall be taken to prevent staining or discoloration during storage. If storage is to be for a prolonged period, polyethylene or other suitable plastic film shall be placed between wood and finished surfaces of completely dry stone. Polyethylene or other suitable plastic film shall be used as an overall protective covering. Lewis holes shall be plugged during freezing weather to prevent the accumulation of water. Salt shall not be used for melting of ice formed in Lewis holes or on pieces, or for any purpose involving contact with the granite.

1.7 WARRANTY

The Contractor shall warrant the work of this section to be in compliance with the Contract Documents and free from faults and defects in materials and workmanship for a period of one year from the completion of the work.

1.8 MAINTENANCE

The granite fabricator shall supply, upon request, a manual indicating the recommended cleaning and Maintenance of the installed work of this section. Catalogs and cuts from producers of recommended cleaning and maintenance materials shall be included in the maintenance manual. The manual shall include information regarding cleaning methods, stain removal methods and sealers.

PART 2 PRODUCTS

2.1 MATERIALS

2.1.1 General

All granite shall be of standard granite, free of cracks, seams, or starts which may impair the structural integrity or function. Inherent color variations, characteristic of the quarry from which it is obtained, will be acceptable. Granite quality, design, fabrication, and installation shall conform to ASTM C97, ASTM C99, ASTM C170, ASTM C615, ASTM C880, ASTM C1201, ASTM E283, and ASTM E331.

2.1.2 Schedule

Granite panels and fieldstone shall be the type indicated on the Drawings. The extent of the granite shall be as indicated on the Drawings. The finished surface shall be a thermal finish. Each color of granite shall come from a single quarry, with sufficient reserves to satisfy the requirements of the project, and the granite supplier shall have the capabilities to cut and finish the stone without delaying the project.

2.2 ACCESSORIES

2.2.1 Anchors

All anchors or anchoring devices coming in contact with the granite, shall be Type 302 or 304 stainless steel in accordance with ASTM A167 or Extruded Aluminum in accordance with ASTM B 221, alloy and temper as required, minimum strength and durability properties of 6063-T6. Wire anchors are not acceptable for exterior use. Fieldstone ties shall be zinc-coated metal ASTM A-153 or stainless steel. Anchors and ties shall comply with ASTM C1242.

2.2.2 Setting Buttons

Lead or resilient plastic setting pads, nonstaining to the granite, sized to suit joint thickness and bed depths shall be used.

2.2.3 Steel Plates

ASTM A36

Steel Tubing: Cold formed ASTM A500.

2.2.4 Plastic Tubing for Weeps

Medium density polyethylene, outside diameter of 6 mm and of a length required to extend between exterior face of stone and cavity behind.

2.3 MORTARS

2.3.1 General

All methods of measuring, mixing, and handling of mortars shall be in strict compliance with ASTM C270. Use accurate measuring devices to mix mortar ingredients by volume. Mix colored mortars separately and thoroughly clean vessels and mixing equipment between different colored batches to avoid color contamination from each other. Maximum pot life and retempering shall be as indicated in ASTM C270. Mortar joints shall be raked to a depth of no less than the joint width. Joints shall be pointed after initial cure of setting mortars. When "thumbprint hard", pointing shall be tooled to a concave profile using a striking tool with a diameter of 1 1/2 times the joint width.

2.3.2 Mixes

a. Mortar for Exterior Ashlar (above grade) bed and head joints shall be Type N per ASTM C270.

b. Pointing mortar for Exterior Ashlar joints shall be Type N per ASTM C270.

c. Mortar for Fieldstone shall be Type M per ASTM C-270-73.

d. Sand shall conform to ASTM C144-70.

e. Hydrated lime shall conform to ASTM C207-49.

f. Portland cement shall conform to ASTM C-150-73a.

g. Masonry cement shall conform to ASTM C91-71 Type II.

2.4 PANEL FABRICATION

2.4.1 General

Fabricate all granite in sizes and shapes required as indicated on the Drawings and on approved shop drawings. All granite shall comply with "Specification for Architectural Granite" as recommended by the National Building Granite Quarries Association.

2.4.2 Tolerances

All granite shall be of the specified thickness and within a tolerance of plus or minus 3 mm of the nominal thickness shown. Overall face size may vary plus or minus 1.5 mm in both height and width, including being out of square to that tolerance.

2.4.3 Joints

Joints of stone shall be square and true and at approximately 90 degrees to the face. For exterior panel facing, joints shall be 9 mm wide unless otherwise noted. Fieldstone shall be laid with a 13 mm joint.

2.4.4 Anchor Provision

Drill, cut and sink provisions within the granite to receive anchors, fasteners, supports and any lifting devices needed to properly handle and attach the stone in place. Allow room for expansion of the anchoring

devices where necessary. Where liners are required on the back of panels, secure by means of a mechanical anchor. The use of adhesives as the primary means of attachment is not permitted.

2.4.5 Arrises

All arrises shall be slightly blunted to remove the sharp edge and to reduce chipping of the finished edge.

PART 3 EXECUTION

3.1 EXAMINATION

Prior to installing granite, examine the existing surface that is to receive the cut stone and verify it is in accordance with the specifications and as indicated on the Drawings. Do not proceed until defective surfaces are brought into compliance.

Verify measurements and tolerances and report in writing to the Contracting Officer conditions that are not correct. This includes water tightness of sub-surface, installation of anchoring accessories, and other mechanical devices required to be installed prior to the installation of the cut stone work.

3.2 PREPARATION

Advise installers of other work about requirements relating to the placement of inserts, flashing reglets, and other items to be used by the stonework installer for anchoring, supporting, and flashing of dimensional stonework. Furnish shop drawings to other trades for coordination.

Prior to setting cut stone, clean all surfaces to remove accumulated dirt and stains. Clean thoroughly by scrubbing with non-metallic brushes followed by a drenching with clean water. Use only mild detergents that do not contain caustic fillers.

3.3 INSTALLATION

3.3.1 Quality

Proceed with the installation of the stonework using skilled mechanics capable of proper handling of the setting of the stone and able to field cut where necessary with sharp and true edges.

Set stone in compliance with the approved shop drawings. Set with anchors, supports, and fasteners, as indicated, to properly secure the stone accurately in the places indicated on the approved shop drawings. Joints shall be uniform in appearance and edges and faces aligned to tolerances indicated.
Fieldstone wall shall be erected plumb and true to lines. Lay with completely filled mortar joints. Do not furrow bed joints.

3.3.2 Tolerances

For variation from plumb for columns and walls do not exceed 6 mm in 3 m, 9 mm in a story height, or 13 mm in 12.19 m or more. For external corners, expansion joints, and other critical lines, do not exceed 6 mm in any story or 6 m maximum, or 13 mm in 12 m or more.

For variations from level on lintels, sills, parapets, and other horizontal lines, do not exceed 13 mm in any bay or 6 m maximum, or 19 mm in 12 m or more.

For wall thicknesses and column sizes, do not exceed minus 6 mm or plus 13 mm in section dimensions.

3.3.3 Contiguous Work

Provide chases, reveals, reglets, and openings as indicated on the approved shop drawings to accommodate contiguous construction. Close up open spaces with the same stonework as the surrounding area so the enclosed areas match those already set.

3.4 ADJUSTING and CLEANING

Repair or replace stonework found to be not within the range of the approved mock up in appearance or application including broken, stained or chipped stonework, or stonework not properly fitted. Minor patching in small areas may be acceptable if the repair does not distract from the overall appearance of the finished project.

As soon as possible after installation, clean all finished stonework with a mild detergent using a fiber brush. After cleaning, rinse with clean water. Do not use acid or other caustic materials. When cleaning is completed, remove temporary protection installed during construction.

3.5 PROTECTION

At the end of each day's work, cover top of walls with a nonstaining waterproof covering. Protect partially finished work when not being worked on. Protect sills, ledges, and other projections from mortar or other droppings during the process of the work. Provide work covers where needed.

3.6 GRANITE FIELDSTONE

Follow the provisions of section 04200 MASONRY, PART 3, EXECUTION and specific instructions below.

3.6.1 Preparation

Before work progresses, verify that backing structure is plumb and that all bearing surfaces are level. Fieldstone must be nearly water saturated, surface-dry when laid. One day before stone is to be laid, place a hose on the pile of stone until water runs from the pile. Adjust procedure for weather extremes. Ties, anchors, lintels, etc. must be cleaned of loose rust, ice, or other foreign matter before incorporation into the wall.

3.6.2 Anchors

Tie stone to backing with metal ties by providing minimum one tie per .4 square meters of wall surface area. Maximum spacing between adjacent ties shall be 400 mm vertically and 800 mm o.c. horizontally. Ties shall be imbedded in horizontal joints 50 mm minimum.

3.6.3 Bond

Lay stone in random order taking care to avoid vertical joints by overlapping each joint with the stone above. Color range of stone should be uniformly distributed over total area of work.

3.6.4 Joining Work

Where fresh masonry joins partially set masonry, remove loose stone and mortar then clean and lightly wet surface of set masonry. Stop off horizontal run of masonry by racking back 1/2 length of stone in each course. Toothing is not permitted.

3.6.5 Joints

Lay stone with 13mm mortar joint. Tool joints when "thumb-print" hard with a round jointer, slightly larger than width of joint. Trowel-point or concave-tool exterior joints below grade. Flush cut joints not tooled. Retempering mortar is not permitted.

3.6.6 Flashing

Clean surface of masonry smooth and remove any projections which could damage flashings. Place flashing on a bed of mortar. Cover flashing with mortar. Provide additional ties at opening 1 m o.c. within 300 mm of opening.

3.6.7 Weep Holes

Provide weep holes in head joints of first course immediately above flashing with sash cord in joint at 600 mm o.c. maximum. Protect weep holes and area above flashing from mortar droppings.

3.6.8 Sealant Recesses

Provide open joint 19 mm deep, and 6 mm to 9 mm wide, where masonry meets doors, windows, and other exterior openings.

3.6.9 Expansion Joints

Provide joints as shown on plans. Keep joint clean and free of debris.

3.6.10 Cleaning

Cut out and repoint any defective joints. Do not use cleaning agents on stonework. Clean stone masonry with stiff brush and clean water only. Contractor shall clean site of stone chips, mortar droppings, etc.

-- End of Section --

SECTION 05055

WELDING, STRUCTURAL

PART 1 GENERAL

1.1 REFERENCES

The publications listed below form a part of this specification to the extent referenced. The publications are referred to in the text by basic designation only.

AMERICAN INSTITUTE OF STEEL CONSTRUCTION (AISC)

AISC-04	(1989) Specification for Structural Steel Buildings - Allowable Stress Design, Plastic Design

AMERICAN SOCIETY FOR NONDESTRUCTIVE TESTING (ASNT)

ASNT-01	(1996) Recommended Practice SNT-TC-1A

AMERICAN WELDING SOCIETY (AWS)

AWS A2.4	(1993) Standard Symbols for Welding, Brazing and Nondestructive Examination
AWS A3.0	(1994) Standard Welding Terms and Definitions
AWS D1.1	(1994) Structural Welding Code - Steel
AWS Z49.1	(1994) Safety in Welding and Cutting and Allied Processes

1.2 DEFINITIONS

Definitions of welding terms shall be in accordance with AWS A3.0.

1.3 GENERAL REQUIREMENTS

The design of welded connections shall conform to AISC-04 unless otherwise indicated or specified. Material with welds will not be accepted unless the welding is specified or indicated on the drawings or otherwise approved. Welding shall be as specified in this section, except where additional requirements are shown on the drawings or are specified in other sections. Welding shall not be started until welding procedures, welders, welding operators, and tackers have been qualified and the submittals approved by the Contracting Officer. Qualification testing shall be performed at or near the work site. Each Contractor performing welding shall maintain records of the test results obtained in welding procedure, welder, welding operator, and tacker performance qualifications.

1.4 SUBMITTALS

Government approval is required for submittals with a "GA" designation;

submittals having an "FIO" designation are for information only. The following shall be submitted in accordance with Section 01330SUBMITTAL PROCEDURES:

SD-08 Statements

Welding Procedure Qualifications; GA|ED.

Welder, Welding Operator, and Tacker Qualification; GA|ED.

Inspector Qualification; GA|ED.

Copies of the welding procedure specifications; the procedure qualification test records; and the welder, welding operator, or tacker qualification test records.

SD-18 Records

Quality Control; FIO;AR.

A quality assurance plan and records of tests and inspections.

1.5 WELDING PROCEDURE QUALIFICATIONS

Except for prequalified (per AWS D1.1) and previously qualified procedures, each Contractor performing welding shall record in detail and shall qualify the welding procedure specification for any welding procedure followed in the fabrication of weldments. Qualification of welding procedures shall conform to AWS D1.1 and to the specifications in this section. Copies of the welding procedure specification and the results of the procedure qualification test for each type of welding which requires procedure qualification shall be submitted for approval. Approval of any procedure, however, will not relieve the Contractor of the sole responsibility for producing a finished structure meeting all the requirements of these specifications. This information shall be submitted on the forms in Appendix E of AWS D1.1. Welding procedure specifications shall be individually identified and shall be referenced on the detail drawings and erection drawings, or shall be suitably keyed to the contract drawings. In case of conflict between this specification and AWS D1.1, this specification governs.

1.5.1 Previous Qualifications

Welding procedures previously qualified by test may be accepted for this contract without requalification if the following conditions are met:

a. Testing was performed by an approved testing laboratory, technical consultant, or the Contractor's approved quality control organization.

b. The qualified welding procedure conforms to the requirements of this specification and is applicable to welding conditions encountered under this contract.

c. The welder, welding operator, and tacker qualification tests conform to the requirements of this specification and are applicable to welding conditions encountered under this contract.

1.5.2 Prequalified Procedures

Welding procedures which are considered prequalified as specified in AWS D1.1 will be accepted without further qualification. The Contractor shall submit for approval a listing or an annotated drawing to indicate the joints not prequalified. Procedure qualification shall be required for these joints.

1.5.3 Retests

If welding procedure fails to meet the requirements of AWS D1.1, the procedure specification shall be revised and requalified, or at the Contractor's option, welding procedure may be retested in accordance with AWS D1.1. If the welding procedure is qualified through retesting, all test results, including those of test welds that failed to meet the requirements, shall be submitted with the welding procedure.

1.6 WELDER, WELDING OPERATOR, AND TACKER QUALIFICATION

Each welder, welding operator, and tacker assigned to work on this contract shall be qualified in accordance with the applicable requirements of AWS D1.1 and as specified in this section. Welders, welding operators, and tackers who make acceptable procedure qualification test welds will be considered qualified for the welding procedure used.

1.6.1 Previous Qualifications

At the discretion of the Contracting Officer, welders, welding operators, and tackers qualified by test within the previous 6 months may be accepted for this contract without requalification if all the following conditions are met:

a. Copies of the welding procedure specifications, the procedure qualification test records, and the welder, welding operator, and tacker qualification test records are submitted and approved in accordance with the specified requirements for detail drawings.

b. Testing was performed by an approved testing laboratory, technical consultant, or the Contractor's approved quality control organization.

c. The previously qualified welding procedure conforms to the requirements of this specification and is applicable to welding conditions encountered under this contract.

d. The welder, welding operator, and tacker qualification tests conform to the requirements of this specification and are applicable to welding conditions encountered under this contract.

1.6.2 Certificates

Before assigning any welder, welding operator, or tacker to work under this contract, the Contractor shall submit the names of the welders, welding operators, and tackers to be employed, and certification that each individual is qualified as specified. The certification shall state the type of welding and positions for which the welder, welding operator, or tacker is qualified, the code and procedure under which the individual is qualified, the date qualified, and the name of the firm and person certifying the qualification tests. The certification shall be kept on file, and 3 copies shall be furnished. The certification shall be kept

current for the duration of the contract.

1.6.3 Renewal of Qualification

Requalification of a welder or welding operator shall be required under any of the following conditions:

a. It has been more than 6 months since the welder or welding operator has used the specific welding process for which he is qualified.

b. There is specific reason to question the welder or welding operator's ability to make welds that meet the requirements of these specifications.

c. The welder or welding operator was qualified by an employer other than those firms performing work under this contract, and a qualification test has not been taken within the past 12 months. Records showing periods of employment, name of employer where welder, or welding operator, was last employed, and the process for which qualified shall be submitted as evidence of conformance.

d. A tacker who passes the qualification test shall be considered eligible to perform tack welding indefinitely in the positions and with the processes for which he is qualified, unless there is some specific reason to question the tacker's ability. In such a case, the tacker shall be required to pass the prescribed tack welding test.

1.7 INSPECTOR QUALIFICATION

Inspection and nondestructive testing personnel shall be qualified in accordance with the requirements of ASNT-01 for Levels I or II in the applicable nondestructive testing method. The inspector may be supported by assistant welding inspectors who are not qualified to ASNT-01, and assistant inspectors may perform specific inspection functions under the supervision of the qualified inspector.

1.8 SYMBOLS

Symbols shall be in accordance with AWS A2.4, unless otherwise indicated.

1.9 SAFETY

Safety precautions during welding shall conform to AWS Z49.1.

PART 2 PRODUCTS

2.1 WELDING EQUIPMENT AND MATERIALS

All welding equipment, electrodes, welding wire, and fluxes shall be capable of producing satisfactory welds when used by a qualified welder or welding operator performing qualified welding procedures. All welding equipment and materials shall comply with the applicable requirements of AWS D1.1.

PART 3 EXECUTION

3.1 WELDING OPERATIONS

3.1.1 Requirements

Workmanship and techniques for welded construction shall conform to the requirements of AWS D1.1 and AISC-04 When AWS D1.1 and the AISC-04 specification conflict, the requirements of AWS D1.1 shall govern.

3.1.2 Identification

Welds shall be identified in one of the following ways:

a. Written records shall be submitted to indicate the location of welds made by each welder, welding operator, or tacker.

b. Each welder, welding operator, or tacker shall be assigned a number, letter, or symbol to identify welds made by that individual. The Contracting Officer may require welders, welding operators, and tackers to apply their symbol next to the weld by means of rubber stamp, felt-tipped marker with waterproof ink, or other methods that do not cause an indentation in the metal. For seam welds, the identification mark shall be adjacent to the weld at 1 meter intervals. Identification with die stamps or electric etchers shall not be allowed.

3.2 QUALITY CONTROL

Testing shall be done by an approved inspection or testing laboratory or technical consultant, or if approved, the Contractor's inspection and testing personnel may be used instead of the commercial inspection or testing laboratory or technical consultant. The Contractor shall perform visual, radiographic, ultrasonic, magnetic particle, or dye penetrant inspection as indicated to determine conformance with paragraph STANDARDS OF ACCEPTANCE. Procedures and techniques for inspection shall be in accordance with applicable requirements of AWS D1.1, except that in radiographic inspection only film types designated as "fine grain," or "extra fine," shall be employed.

3.3 STANDARDS OF ACCEPTANCE

Dimensional tolerances for welded construction, details of welds, and quality of welds shall be in accordance with the applicable requirements of AWS D1.1 and the contract drawings. Nondestructive testing shall be by visual inspection, radiographic, ultrasonic, magnetic particle, or dye penetrant methods as indicated on the drawing. The minimum extent of nondestructive testing shall be as indicated on the drawings.

3.3.1 Nondestructive Examination

The welding shall be subject to inspection and tests in the mill, shop, and field. Inspection and tests in the mill or shop will not relieve the Contractor of the responsibility to furnish weldments of satisfactory quality. When materials or workmanship do not conform to the specification requirements, the Government reserves the right to reject material or workmanship or both at any time before final acceptance of the structure containing the weldment.

3.3.2 DESTRUCTIVE TESTS

When metallographic specimens are removed from any part of a structure, the

Contractor shall make repairs. The Contractor shall employ qualified welders or welding operators, and shall use the proper joints and welding procedures, including peening or heat treatment if required, to develop the full strength of the members and joints cut and to relieve residual stress.

3.4 GOVERNMENT INSPECTION AND TESTING

In addition to the inspection and tests performed by the Contractor for quality control, the Government will perform inspection and testing for acceptance to the extent determined by the Contracting Officer. The costs of such inspection and testing will be borne by the Contractor if unsatisfactory welds are discovered, or by the Government if the welds are satisfactory. The work may be performed by the Government's own forces or under a separate contract for inspection and testing. The Government reserves the right to perform supplemental nondestructive and destructive tests to determine compliance with paragraph STANDARDS OF ACCEPTANCE.

3.5 CORRECTIONS AND REPAIRS

When inspection or testing indicates defects in the weld joints, the welds shall be repaired using a qualified welder or welding operator as applicable. Corrections shall be in accordance with the requirements of AWS D1.1 and the specifications. Defects shall be repaired in accordance with the approved procedures. Defects discovered between passes shall be repaired before additional weld material is deposited. Wherever a defect is removed and repair by welding is not required, the affected area shall be blended into the surrounding surface to eliminate sharp notches, crevices, or corners. After a defect is thought to have been removed, and before rewelding, the area shall be examined by suitable methods to insure that the defect has been eliminated. Repair welds shall meet the inspection requirements for the original welds. Any indication of a defect shall be regarded as a defect, unless reevaluation by nondestructive methods or by surface conditioning shows that no unacceptable defect is present.

-- End of Section --

SECTION 05061

ULTRASONIC INSPECTION OF WELDMENTS

PART 1 GENERAL

1.1 REFERENCES

The publications listed below form a part of this specification to the extent referenced. The publications are referred to in the text by basic designation only.

AMERICAN SOCIETY FOR NONDESTRUCTIVE TESTING (ASNT)

ASNT-01	(1996) Recommended Practice SNT-TC-1A
ASNT-04	(1994) Question and Answer Book C: Ultrasonic Testing Method; Levels I, II, III (Supplement to Recommended Practice SNT-TC-1A)

AMERICAN SOCIETY FOR TESTING AND MATERIALS (ASTM)

ASTM E 165	(1995) Liquid Penetrant Examination
ASTM E 709	(1995) Magnetic Particle Examination

AMERICAN WELDING SOCIETY (AWS)

AWS D1.1	(1994) Structural Welding Code - Steel

1.2 DEFINITIONS

1.2.1 A Scan

Method of data presentation on a cathode ray tube using rectangular coordinates in which a horizontal base line indicates elapsed time when reading from left to right. A vertical deflection in the base line indicates reflect signal amplitude.

1.2.2 Acoustically Similar Material

Material the same as that to be inspected; or another material proven to have acoustical velocity within plus or minus 3 percent and an attenuation within plus or minus 0.009843 dB/mm (0.25 dB/inch) of the inspected material for the inspection frequency and wave mode, using the same mode as that to be used for inspection.

1.2.3 Amplitude

When referring to an indication in A scan presentation, amplitude is the vertical height of the indication measured from peak-to-peak for radio frequency indications and trace-to-peak for video indications.

1.2.4 Attenuation

Dissipation or loss of energy as ultrasonic vibrations travel through the material. Attenuation is caused almost entirely by scattering of the ultrasonic vibrations generated by the search unit.

1.2.5 Attenuation-Correction Controls

Circuitry to provide a continuous increase in amplification with respect to time. This circuitry compensates for the reduction in sensitivity with depth as a result of sound beam divergence and its attenuation in material.

1.2.6 Back Reflection or End Reflection

Reflection from the opposite side, end, or boundary of the material into which the ultrasonic energy was introduced.

1.2.7 Calibrated Gain Control (Attenuator)

Circuitry with which gain can be reduced finite amounts by switching electrical signal attenuation into the circuit.

1.2.8 Calibration

Process of comparing an instrument or device with a standard to determine accuracy or produce a scale.

1.2.9 Cathode Ray Tube (CRT)

An electron tube in which a controlled beam of electrons from the cathode is used to produce an image on a fluorescent screen at the end of the tube.

1.2.10 Couplant

Any material, usually a liquid or semiliquid, used between the search unit and the inspection surface to exclude air and to convey the ultrasonic vibrations between the search unit and the material being inspected.

1.2.11 Damping Control

Control that varies the duration of transducer ringing.

1.2.12 Decibel (dB)

Units for the logarithmic expression of the ratio of power levels. Power levels can be functions of voltage, current, or impedance, for example. Decibel units having no values of their own are only significant when a reference is stated, as 10 dB above one reference level or 6 dB below another reference level.

1.2.13 Delay Control

Means of delaying the pattern obtained on the CRT.

1.2.14 Discontinuity

Anything within a material that will cause a detectable interruption in an ultrasonic beam.

1.2.15 Distance-Amplitude Correction Curve

Curve showing the relationship between signal amplitude and equal-sized reflecting surfaces at various distances from the transducer. Reference standards are used to obtain such curves.

1.2.16 Dynamic Range

Ratio of maximum to minimum size of reflective areas that can be adequately distinguished on the CRT at a constant gain setting.

1.2.17 Effective Depth of Penetration

Maximum depth at which the sensitivity is satisfactory for the quality of test desired.

1.2.18 Examination

Within the context of this specification, is equivalent to the word "inspection."

1.2.19 Gain Control

Circuitry designed into the ultrasonic system to vary reflection amplitude. This control is usually calibrated in decibels. It is also called the sensitivity control.

1.2.20 Gross

Background displacement of the trace on the CRT from the established baseline due to the gain setting, the characteristics of the test equipment, or the material under examination.

1.2.21 Hertz

One complete set of recurrent values of a periodic quantity comprises a cycle. In other words, any one set of periodic variations starting at one condition and returning once to the same condition is a cycle.

1.2.22 Immersion Techniques

Test methods in which the part to be tested and the search units are immersed in water or other suitable liquid couplant. A mechanical device is used to firmly hold and direct the wave angle of the search unit. The search unit does not contact the item being inspected.

1.2.23 Indication

Visual presentation on the cathode ray screen resulting from a sound beam reflection from a boundary surface or discontinuity.

1.2.24 Initial Pulse Indication

Usually called the "initial pulse." A signal on the CRT screen marking the instant at which a voltage impulse is applied to the transmitting crystal. Its rising edge is frequently invisible due to the time lag in the probe shoe and the consequent necessity to ensure coincidence between the time base zero and the instant at which the transmitter pulse actually enters the material under test.

1.2.25 Linearity

Property of an instrument revealed by a linear change in reflected signal or displacement. The vertical linearity is determined by plotting the change in ratios of signal amplitude from two adjacent reflections from an area of known size. The horizontal linearity is determined by plotting the distance the signal is displaced along the sweep against the change in material thickness or by noting the spacing of multiple back reflections.

1.2.26 Longitudinal or Compressional Waves

Simple compression-rare-fraction waves in which particle motion within a material is linear and in the direction of wave propagation. Also called straight beams, or compressional or normal waves.

1.2.27 Longitudinal Wave Inspection

Ultrasonic technique, normally using straight beam methods, in which longitudinal waves are the dominant form.

1.2.28 Mid-Screen Reflection

Reflection whose amplitude is equal to one-half the usable screen height on the CRT.

1.2.29 Megahertz (MHz)

One million hertz per second frequency.

1.2.30 NDT Level I

An NDT Level I individual should be qualified to properly perform specific calibrations, specific NDT, and specific evaluations for acceptance or rejection determinations according to written instructions and to record results.

1.2.31 NDT Level II

An NDT Level II individual should be qualified to set up and calibrate equipment and to interpret and evaluate results with respect to applicable codes, standards, and specifications.

1.2.32 NDT Level III

An NDT Level III individual should be capable of establishing techniques and procedures; interpreting codes, standards, specifications, and procedures; and designating the particular NDT methods, techniques, and procedures to be used.

1.2.33 Node

Distance a shear wave travels in a straight line from the inspection surface before being reflected by the opposite surface.

1.2.34 Pulse Repetition Rate

Number of spaced pulses of sound per second sent into the material being inspected.

1.2.35 Range Control

Means of expanding the pattern obtained on the CRT so that any portion of the total distance being tested can be presented.

1.2.36 Reference Reflector

Standard reflector 1.52 mm (0.06 inch) diameter reference hole in the IIW reference block. Other approved blocks may have a different diameter reflector.

1.2.37 Reflector

Boundary, consisting of an opposite side, crack, or separation, or a distinct change in material such as slag or porosity that reflects the ultrasonic energy the same as a mirror reflects light.

1.2.38 Refracted Waves

Waves that have undergone change of velocity and direction by passing from one material to another material with different acoustical properties. Refraction will occur wherever the angle of the incident wave to the interface is other than perpendicular.

1.2.39 Rejectable Discontinuity (Defect)

Reflector large enough to produce a signal (decibel rating) that exceeds the reject/repair line.

1.2.40 Resolution

Ability to clearly distinguish signals obtained from two reflective surfaces with a minimum separation distance. Near-surface resolution is the ability to clearly distinguish a signal from a reflector at a minimum distance under the contact or near surface without interference from the initial pulse signal. Far-surface resolution is the ability to clearly distinguish signals from reflectors displaced at minimum distances from the far or back surface when the sound beam is normal to that back surface.

1.2.41 Ringing

Excitation in a transducer due to the application of a short pulse of high voltage.

1.2.42 Scanning

Procedure of moving the search unit or units along a test surface to obtain complete inspection of the entire volume of a material being inspected. Preliminary scanning refers to a somewhat common practice of rapidly traversing a weld ultrasonically with a higher instrument gain or sensitivity level than will be used for the evaluation. It gives the operator an estimate of the welding quality and also makes all defects more prominent and less likely to be missed.

1.2.43 Search Unit

Device containing a piezoelectric material used for introducing vibrations into a material to be inspected or for receiving the vibrations reflected from the material. The active element of the search unit is defined as the effective transmitting area. Search units are also called transducers or

probes. They may be single or dual and contain one or two piezoelectric elements, respectively, for transmission and reception. The single search unit is sometimes enclosed in a transducer wheel or search unit wheel. The search unit may be manually handled and placed in direct contact with the material to be inspected or may be held in a fixture for immersion techniques.

1.2.44 Sensitivity

Measure of the ultrasonic equipment's ability to detect discontinuities. Quantitatively, it is the level of amplification of the receiver circuit in the ultrasonic instrument necessary to produce the required indication on the scope from the reference hole in the reference block. Also see "Standard Reference Level."

1.2.45 Shear Waves

Waves in which the particles within the material vibrate perpendicularly to the direction in which the wave travels or propagates. Also called transverse waves.

1.2.46 Shear Wave Inspection

Inspection technique using shear waves in a material. The search unit is placed at an angle to the contact surface of the material so the resultant refracted sound is a shear wave at an angle to the normal.

1.2.47 Standard Reference Level

Mid-screen height reflection when beaming at the 1.52 mm (0.06 inch) hole in the primary reference block or the reference hole in the secondary standard.

1.2.48 Surface Waves

Waves that propagate along the surface of the material and penetrate it to only about 1/2-wavelength. Also known as Rayleigh waves.

1.2.49 Test Frequency

Operating frequency in hertz per second of the search unit during period of activation. Frequency is usually expressed in megacycles per second or megahertz. The latter term has been adopted for international use and is preferred.

1.2.50 Video Form

Type of signal presentation on a CRT in which only the upper half of the signal appears.

1.3 GENERAL REQUIREMENTS

The procedures, methods, standards, and description of equipment specified herein shall be used for inspection of weldments. Ultrasonic inspections shall be made to detect the following defects:

a. Cracks or crack-like faults.

b. Root defects, including lack of penetration and fusion.

c. Lack of fusion between passes on the sidewall.

d. Porosity or inclusions and excessive undercutting.

1.4 SUBMITTALS

Government approval is required for submittals with a "GA" designation; submittals having an "FIO" designation are for information only. The following shall be submitted in accordance with Section 01330 SUBMITTAL PROCEDURES:

SD-08 Statements

Ultrasonic Inspection; FIO;AR.

Procedures and Methods. The pulse echo contact method with an A scan presentation shall be used for the ultrasonic inspection of welded joints except that immersion techniques may be used for some applications when approved by the Contracting Officer. The Contractor shall provide a standard reference block and working standards as described in paragraph REFERENCE STANDARDS FOR EQUIPMENT, QUALIFICATIONS, AND CALIBRATION. The procedures to be used for personnel and equipment qualification, equipment calibration, and inspection, shall be submitted to the Contracting Officer at least 30 days prior to their intended use. Approval by the Government will in no way affect the obligation of the Contractor to employ qualified personnel, equipment, and procedures, and to perform the inspection as specified. The procedure description shall include the following:

a. Couplant.

b. Search unit characteristics including angle, size, shape, nominal frequency, type designation.

c. Method and type of wave.

d. Equipment and accessories including manufacturer, model number, date of manufacture, last date of calibration, and the manufacturer's electrical, physical, and performance specifications.

e. Decibel (dB) compensation system for distance-amplitude correction.

SD-18 Records

Ultrasonic Inspection; FIO;AR.

Reports containing the following information:

a. Identification and Location of Inspected Item: Name and place of the inspected item, the person performing the inspection, and the date of inspection.

b. Detail of Inspections: Details of methods, types of waves used, search units, frequencies, inspection equipment identification, and calibration data with enough information to permit duplication of the inspection at a later date.

c. Response in Calibration: The response from the DSC or SC block

used in calibration and for acceptance/rejection in terms of the response from the 1.524 mm (0.06 inch) reference hole in the standard IIW block (primary standard).

d. Identification of Unacceptable Areas: Locations, dimensions, types, and area of unacceptable defects and discontinuities giving reflections over 50 percent of the reject/repair line. These may be noted on a sketch or marked-up drawing.

e. Record of Repair Areas: A record of repaired areas shall be furnished as well as test results for the repaired areas.

1.5 WAVE TYPES

The types of waves and the conditions under which they shall be used are specified below:

1.5.1 Shear Waves

Unless conditions prohibit, shear waves shall be used. A longitudinal wave procedure may be used instead, if approved by the Contracting Officer. Refracted waves between 40 degrees and 70 degrees shall be used except where different angles are indicated in approved procedures, such as for materials less than 13 mm thick, for materials with sound velocities greater than in steel, when the weldments are not readily accessible, or when existing backing rings or backing strips are not removed. For inspection of weldments containing backing rings or backing strips, the instrument shall be adjusted and the refracted angles shall be selected in a way to separate the weldment and the backing ring reflections. The search unit angle and the resulting shear wave angle in the material to be inspected shall be established by the Contractor for each application and this information shall be included in the procedure submitted for approval.

1.5.2 Longitudinal Waves

When conditions prohibit the use of shear waves, longitudinal waves may be used. The procedure shall be specially developed to suit the application and shall have the prior approval of the Contracting Officer.

1.6 CHANGES IN PROCEDURE

Should application of an approved procedure not provide for good resolution or adequate ultrasonic penetration in the items to be inspected (see paragraph EQUIPMENT QUALIFICATION REQUIREMENTS), changes in procedure or equipment such as frequency, pulse repetition rate, angle of search unit, couplant, or oscilloscope shall be made by the Contractor. Adequacy of the new procedure shall be demonstrated to the Contracting Officer. The Government reserves the right to require a change in test equipment during these tests if any of the following test system characteristics fall below the levels listed in paragraph EQUIPMENT QUALIFICATION REQUIREMENTS: sensitivity, amplitude and distance linearity, signal-to-noise ratio, entry and back surface resolution and penetration.

1.7 ULTRASONIC EQUIPMENT

The ultrasonic equipment shall conform to the requirements listed in AWS D1.1 Section Inspection, subsection Ultrasonic Equipment, with the following exceptions:

a. The ultrasonic test instruments shall be able to generate, receive, and to present pulses in the frequency range from 1 to 10 megahertz (MHz).

b. The horizontal linearity of the ultrasonic instrument shall be measured in accordance with paragraph EQUIPMENT QUALIFICATION REQUIREMENTS.

c. In addition to the resolution test specified in AWS D1.1, subsection Ultrasonic Equipment, both near- and far-surface resolution tests shall be conducted in accordance with the tests specified for these characteristics in the paragraph EQUIPMENT QUALIFICATION REQUIREMENTS.

1.8 PERSONNEL QUALIFICATION AND REQUIREMENTS

1.8.1 Personnel Qualification

The three levels of responsibility associated with ultrasonic inspection are defined in ASNT-01. For qualification to perform ultrasonic inspection, personnel shall be certified under ASNT-01 and ASNT-04within a period of 1 year before the date of contract. Other qualification or certification may be accepted at the Contracting Officer's discretion. Personnel with only an operator or inspector trainee certification will not be considered qualified to pass judgement on the acceptability of inspected items, but may work under the direct supervision of a qualified ultrasonic inspector. Qualified ultrasonic inspectors shall be able to judge the acceptability of the item in accordance with paragraph ACCEPTANCE/REJECTION LIMITS.

1.8.2 Examinations

If the Contracting Officer doubts an individual's ability as an operator, inspector, or supervisor, the individual shall be recertified in accordance with ASNT-01. At the option of the Government, the Contracting Officer may participate in administering the examination and in evaluating the results.

1.9 REFERENCE STANDARDS FOR EQUIPMENT, QUALIFICATIONS, AND CALIBRATION

Reference standards shall be used to calibrate the inspection equipment, test its operating condition, and record the sensitivity or response of the equipment during the inspection in accordance with paragraph EQUIPMENT QUALIFICATION REQUIREMENTS. The standards shall comprise a standard reference block and reference specimens as noted below.

1.9.1 Standard Reference Block

The standard reference block or primary standard shall be provided by the Contractor and shall consist of the IIW block in AWS D1.1, Section Inspection, subsection Reference Standards. The standard reference block also shall be used in any reinspection on the same basis as the original inspection, even though the reinspection is to be performed by other ultrasonic instruments and accessories.

1.9.2 Working Standards

The Contractor may use other recognized working standards detailed with the IIW block in AWS D1.1 such as the Sensitivity Calibration (SC) block. However, such blocks must be referenced to the IIW block as noted in

paragraph SENSITIVITY CALIBRATION OF LONGITUDINAL AND ANGLE WAVE SYSTEMS. Details of their use must be included in the procedure description submitted to the Contracting Officer. These blocks are the secondary standards. They shall be of acoustically similar material to the welds to be inspected. The secondary standards shall be suited for the applicable tests specified in paragraph EQUIPMENT QUALIFICATION REQUIREMENTS and shall be used as follows, except where the IIW block is specifically required:

a. To assure adequate penetration of the base material.

b. To provide a secondary field standard.

c. To calibrate the equipment and establish the standard reference level.

1.9.3 Resolution Test Block

The Contractor shall furnish a resolution test block in accordance with the details shown in AWS D1.1 Section Inspection, subsection Ultrasonic Equipment.

1.10 EQUIPMENT QUALIFICATION REQUIREMENTS

The ultrasonic instrument and accessories shall be evaluated on their arrival at the jobsite just before the start of inspection. They shall be evaluated using the Contractor's furnished primary standard and shall meet or exceed the requirements listed in paragraphs under EQUIPMENT QUALIFICATION REQUIREMENTS. Equipment that does not meet these requirements shall not be used in the inspection.

1.10.1 Requalifications

The equipment shall be requalified after normal use at intervals not to exceed 40 hours except as noted. The equipment also shall be requalified immediately after maintenance or repair or when the Contracting Officer considers its operation questionable.

1.10.2 Longitudinal Wave System

1.10.2.1 Vertical Amplitude Linearity

Two adjacent reflections of different amplitudes obtained through the thickness of the primary or secondary standard shall vary in the same proportion as the amplitude of the first reflection is increased in discrete 2-dB increments between 20 percent and 80 percent to full screen height. For each gain setting, the amplitude of each reflection shall vary by the same factor within plus or minus 5 percent. Requalification is required monthly or as otherwise stated in paragraph EQUIPMENT QUALIFICATION REQUIREMENTS.

1.10.2.2 Horizontal Linearity

The first three multiple reflections obtained through the thickness of the primary or secondary standard shall be equally spaced within plus or minus 5 percent when spread over 90 percent of the sweep length. Requalification is required monthly or as otherwise stated in paragraph EQUIPMENT QUALIFICATION REQUIREMENTS.

1.10.2.3 Near-Surface Resolution

Excessive ringing that appears on the CRT to the right of the sound entry point is not to exceed a 13 mm (1/2 inch) equivalent distance in steel with the search unit placed on the 100 mm (4 inch) edge of the IIW (primary) block and positioned for maximum amplitude reflection from the 1.524 mm (0.06 inch) reference hole of the primary standard. The reference reflector shall be set to mid-screen and the gain shall be increased 20 dB. The reference hole located at least 13 mm (1/2 inch) from one edge of the AW DSC or SC secondary standard shall be used similarly. Acceptability shall be on the same basis as in the primary standard.

1.10.2.4 Far-Surface Resolution

This property of the equipment will be verified by the method detailed in AWS D1.1, Section Inspection, subsection Calibration of the Ultrasonic Unit with the IIW or Other Approved Calibration Blocks. In addition, the trailing edge of the third reflection shall return to the sweep line and be clearly discernible.

1.10.3 Angle Wave System

1.10.3.1 Vertical (Amplitude) Linearity

Two adjacent multiple reflections from the 1.524 mm (0.06 inch) reference hole in the primary standard shall vary in the same proportion as the amplitude of the first reflection in discrete 2-dB increments between 20 percent and 80 percent of full screen height. For each gain setting, the amplitude of each adjacent reflection shall vary within plus or minus 5 percent. For testing with the AWS SC or AWS DSC secondary standard, the same criteria shall apply. For the SC block, the transducer shall be placed on the longitudinal surface contiguous with the sound entry point lines whereas the 100 mm (4 inch) longitudinal surface of the DSC block shall be used for the same purpose. Requalification is required monthly or as otherwise stated in paragraph EQUIPMENT QUALIFICATION REQUIREMENTS.

1.10.3.2 Horizontal Linearity

The first three multiple echoes obtained from the 1.524 mm (0.06 inch) reference hole of the primary standard or from the reference hole in a secondary standard with the transducer positioned at a minimum of 25 mm (1 inch) sound path distance shall be equally spaced plus or minus 5 percent when spread over 90 percent of the sweep length. The gain shall be adjusted to give a mid-screen height first reflection. Requalification is required monthly or as otherwise stated in paragraph EQUIPMENT QUALIFICATION REQUIREMENTS.

1.10.3.3 Near-Surface Resolution

The search unit shall be positioned for maximum amplitude using the primary or secondary standard as in the horizontal linearity test. The gain shall be adjusted to give a mid-screen height first reflection and then shall be increased 20 dB. Excessive ringing that appears on the CRT to the right of the sound entry point is not to exceed 13 mm (1/2 inch) equivalent distance in steel.

1.10.3.4 Far-Surface Resolution

The equipment shall delineate the three resolution holes in the resolution block appropriate for the angle of the transducer to be used in the

inspection.

1.10.3.5 Signal-to-Noise Ratio

With the search unit located as in the horizontal linearity test, the gain shall be set to obtain an 80 percent full screen height first reflection. The reference reflection-to-noise-amplitude ratio shall not be less than 10 to 1.

1.10.3.6 Exit Point

The search unit shall be placed on the graduated scale on the 300 mm (12 inch) edge of the primary standard and the ultrasound shall be beamed toward the curved edge of the block. The gain shall be set for a mid-screen first reflection. The search unit shall be moved back and forth until the first reflection is maximized. The index line on the side of the search unit shall be within 1.6 mm (1/16 inch) of the mid-point of the graduated scale in either direction. Requalification is required after 40 hours or as otherwise stated in paragraph EQUIPMENT QUALIFICATION REQUIREMENTS.

1.10.3.7 Transducer Angle

The established exit point of the probe shall be set over the applicable angle index line scribed on the 200 mm (8 inch) or 300 mm (12 inch) edge, as appropriate, of the primary standard. The gain shall be set to obtain a mid-screen first reflection from the 50 mm plexiglass-lined hole for search units up to 70 percent with the search unit placed on the 200 mm (8 inch) edge. Search units of large angles that have been approved specifically by the Contracting Officer shall be tested from the 300 mm (12 inch) edge using the 1.524 mm (0.06 inch) reference hole. The search unit shall be moved back and forth to maximize the first reflection. When the material to be inspected is not acoustically similar to the primary standard, the inspection angle shall be within plus or minus 2 degrees of the angle specified in the approved procedure. Requalification is required after 40 hours or as otherwise stated in paragraph EQUIPMENT QUALIFICATION REQUIREMENTS.

1.11 SENSITIVITY CALIBRATION OF LONGITUDINAL AND ANGLE WAVE SYSTEMS

Sensitivity calibration shall be done immediately after a change of operators and at least every 30 minutes thereafter as testing proceeds. Recalibration shall also be required after any power interruption, including a change of source, when the equipment is suspected of being in error, or after relocation of the jobsite. The 30-minute and relocation calibrations may coincide. Before calibration, the instrument shall be allowed to warm up before calibration is attempted. The instrument range and delay controls shall be adjusted to display signals from the reference hole in the primary (IIW block) or secondary standard (DSC or SC block or both) on the viewing screen for the range of distances to be inspected.

1.11.1 Calibration Procedure

The test instrument shall be calibrated as described below.

1.11.1.1 Longitudinal Wave System

In calibrating with the primary standard, the transducer shall be positioned on the 100 mm (4 inch) edge for maximum reflection from the

1.524 mm (0.06 inch) reference hole. The gain shall be adjusted so that the first reflection is at 50 percent full scale. The top of that indication shall be marked on the CRT with a wax pencil or by other means. This establishes the standard reference level. A point at 80 percent of the standard reference level shall be calculated and marked. This locates the reject/repair line. If a secondary standard is to be used in the inspection, the reject/repair line will be established similarly. For the DSC block, the transducer shall be positioned on the 100 mm (4 inch) long surface and with the SC degrees sound entry point lines. Adjustment for loss of signal due to distance shall be compensated for as noted in paragraph SENSITIVITY CALIBRATION OF LONGITUDINAL AND ANGLE WAVE SYSTEMS.

1.11.1.2 Angle Wave System

In calibrating with either the primary or secondary standard, the transducer shall be positioned on the same surfaces as in the case of the longitudinal wave system but over the sound entry point lines appropriate for the angle of the transducer to be used in the inspection. The gain shall be adjusted to give a first reflection that is 50 percent of full-scale response. The top of that indication shall be marked with a wax pencil or by other means. This establishes the standard reference level. A point at 80 percent of the standard reference level shall be calculated and marked. This locates the reject/repair line. Loss of signal shall be compensated as noted in paragraph SENSITIVITY CALIBRATION OF LONGITUDINAL AND ANGLE WAVE SYSTEMS.

1.11.2 Calibration of the Secondary Standards

After adjusting the first reflection from the reference hole in the secondary standard to 50 percent full-scale response for a sheer or longitudinal wave inspection, a maximized reflection from the 1.524 mm (0.06 inch) reference hole in the primary standard shall be obtained without changing the gain setting. Then this gain setting shall be readjusted to obtain a 50 percent full-scale reflection and the readjusted setting shall be recorded as required by paragraph SUBMITTALS, Records, to provide a basis for recalibration when the secondary standard is unavailable.

1.11.3 Equipment With a Calibrated Gain Control (Attenuator)

When a calibrated gain control attenuator is used, the transducer shall be positioned for a maximum reflection from the reference hole in the secondary standard representing approximately 1/2 the longest inspection distance. This reflection shall be adjusted to mid-scale by varying the gain control accordingly. The difference in decibels between this amplitude and the signal obtained from the first, second, and longest distance reflection obtainable on the secondary standard shall be measured. The differences shall be recorded and plotted on a curve to determine the necessary correction to the amplitude at the various inspection distances. A level (80 percent of the primary level) obtained from the corrected signal heights is equivalent to the reject/repair line.

1.11.4 Equipment With Electronic Distance Compensation Circuitry

If the difference in amplitude between the first reflection and the reflection obtained from the maximum inspection distance is 1 dB or less, the instrument may be used as is. If not, the procedure used for equipment with a calibrated decibel control must be used to determine the necessary correction to the reflections obtained at the various inspection distances.

This characteristic of the equipment must be reexamined on a monthly basis or as otherwise stated in paragraph EQUIPMENT QUALIFICATION REQUIREMENTS and correction factors must be modified accordingly.

1.11.5 Longitudinal Wave Distance-Amplitude Correction Curve

A distance-amplitude correction curve may be used instead of the calibrated gain control or the electronic circuitry for either the shear or longitudinal wave system as described below:

a. A shear wave distance-amplitude correction curve shall be constructed and drawn on the face of the cathode ray tube (CRT) for inspection of weldments in excess of 38 mm (1-1/2 inch) thick when the design of the test equipment permits. The reference hole in the secondary standard SC or DSC shall be used to construct the distance-amplitude correction curve for a minimum of three node points, 1, 2, and 3. The sensitivity of the instrument shall be adjusted to produce 50 percent full-scale response for the maximized primary reflection and the reject/repair line shall be constructed at 80 percent of the established distance-amplitude curve.

b. A longitudinal wave distance-amplitude correction curve shall be constructed and drawn on the face of the CRT when longitudinal waves are to be used in the inspection for material thicknesses exceeding 25 mm, if design of the test equipment permits. The reference hole in the secondary standard shall be used. Instrument sensitivity shall be adjusted to 50 percent full-scale of the maximized response from the reference hole at 1/2-maximum inspection distance. A reject/repair line shall be constructed at 80 percent of the established distance-amplitude curve. The reflection amplitudes to define this curve shall be taken from the faces of the secondary sensitivity standards which are 25 mm (1 inch), 50 mm (2 inch), and 1/2-maximum inspection distance, and the longest distance obtainable from the secondary standard, respectively, from the reference hole. When a correction curve cannot be drawn on the face of the CRT, one of the distance-amplitude correction methods noted above and submitted under the procedure description in accordance with paragraph GENERAL REQUIREMENTS shall be applied.

1.11.6 Longitudinal Wave Inspections Using Immersion Technique

The reference hole in a secondary standard shall be used for each different inspection distance. Repair/reject limits shall be established by immersing both the search unit and secondary standard in the liquid bath in which the inspection is to be conducted. The procedure noted below shall be used:

a. The longitudinal waves from the search unit shall be directed toward the face of the secondary standard closest to the reference hole.

b. The search unit shall be positioned for maximum response. The amplitude of reflection shall be adjusted to 50 percent full-scale. The top of that indication shall be marked on the CRT with a wax pencil or by other means. This establishes the standard reference level. A point at 80 percent of the standard reference level shall be calculated and marked. This locates the

reject/repair point. The above shall be repeated for each different surface-to-hole distance to establish the reject/repair line.

c. With the gain at the same setting and the primary standard and search unit in air, a maximized reflection shall be obtained from the 1.524 mm (0.06 inch) reference hole in the primary standard (IIW). Then, this gain setting shall be readjusted to obtain a 50 percent full-scale reflection. The readjusted setting shall be recorded as required by paragraph SUBMITTALS, Records, to provide a basis for recalibration when the secondary standard is unavailable.

PART 2 PRODUCTS (Not Applicable)

PART 3 EXECUTION

3.1 PREPARATION OF MATERIALS FOR INSPECTION

Surfaces shall be free from the following:

3.1.1 Weld Spatter

Spattering or any roughness that interferes with free movement of the search unit or impairs transmission of the ultrasonic vibrations.

3.1.2 Irregularities

Those which could mask or be confused with defect indications.

3.1.3 Weld Backing Strips

Strips that are not to remain in place shall be removed and all sharp edges and valleys shall be eliminated by grinding or other mechanical means.

3.1.4 Dirt

All loose scale, rust, paint, and dirt shall be removed from the coupling surface.

3.2 INSPECTION PROCEDURE

When possible, all welds shall be examined from both sides of the weld and from one surface. If complete inspection cannot be accomplished from one surface, inspection shall be made from another surface that is part of the same joint. Preliminary scanning techniques using an increased instrument gain shall be used to locate possible defects. When possible, gain shall be increased to a minimum of twice (6 dB) the reference level setting. Final acceptance or rejection shall be evaluated with the equipment properly calibrated and the gain control set at the reference level. The reject/repair line shall be used to evaluate quality of the weld. If a periodic calibration check shows that the equipment is not operating properly or that the system's sensitivity has decreased more than 20 percent (2 dB) from the established sensitivity level, all welds inspected since the prior calibration shall be reexamined. If penetration of the shear waves is questionable, the angle search unit shall be placed in position on one side of the weldment with the waves directed through the weldment. A disconnected angle search unit, plastic or metal wedge or disk, or any good reflector shall be placed in the wave path of the search

unit on the far side of the weld to reflect the sound. When good reflections cannot be obtained by either shear or longitudinal waves, the Contractor shall modify the procedures in accordance with paragraph GENERAL REQUIREMENTS.

3.2.1 Test Frequency

The test frequency for ferrous materials shall be as specified in AWS D1.1, Section Inspection, subsection Ultrasonic Equipment, except for thicknesses below 13 mm, frequencies between 2.25 and 5 MHz may be used to obtain increased sensitivity. For materials that are difficult to penetrate, any frequency within the operating range of the equipment may be used. The effective depth of penetration and sound beam divergency shall be demonstrated to the Contracting Officer.

3.2.2 Couplants

The choice of couplant is optional with the Contractor except as follows:

a. The couplant shall be the same as that used for equipment qualification and calibration.

b. Couplants that may corrode the reference standards and material being tested or leave objectionable residues shall not be used.

c. Oils shall not be used in systems intended to handle liquid oxygen.

d. Couplants shall be of the proper viscosity to give good coupling for the surface roughness.

3.2.3 Shear Wave Inspection

Shear wave inspection shall be performed as follows: The search unit shall be placed on the contact surface at a distance from the weld equal to that used when calibrating the equipment.

3.2.4 Longitudinal Flaws

To detect longitudinal flaws, the search unit shall be slowly moved toward and away from the weld far enough to cover its entire cross section, approximately 90 degrees to the weld centerline. The search unit shall be radially oscillated to the left and right, covering an angle of approximately 30 degrees. During the foregoing movement, the search unit shall be continually advanced parallel to the weld centerline. The rate of movement shall depend on the operator's ability to clearly see and identify all reflections. The amount of movement shall be calculated to insure that the inspection distance will be great enough to traverse the weld.

3.2.5 Transverse Flaws

To detect transverse flaws when the welded surface is ground flush, the search unit shall be moved along the welded surface in each direction parallel to the centerline of the weld metal with the wave radiating parallel to the weld centerline. To detect transverse flaws when the welded surface is not ground flush, the search unit shall be moved parallel to the weld in each direction, on the adjacent base metal at the top of the weld, with the wave directed at an angle of 30 degrees to the weld centerline.

3.2.6 Longitudinal Wave Inspection

This inspection shall be made as follows:

a. The search unit shall be placed on the contact surface with the wave directed in a straight line through any intervening base metal and through the weldment.

b. The search unit shall then be moved slowly in a direction parallel to the weld centerline and zigzagged across an area equivalent to the welded thickness to make sure that waves penetrate the entire welded cross section.

c. The rate of movement shall be dependent on the operator's ability to clearly see and identify all reflections.

3.3 GENERAL ACCEPTANCE/REJECTION REQUIREMENTS

Discontinuities shall be evaluated only when the ultrasonic equipment is calibrated properly. If discontinuities are detected, the sound beam shall be directed to maximize the signal amplitude. To determine the length of a discontinuity, the search unit shall be moved parallel to the discontinuity axis in both directions from the position of maximum signal amplitude. One-half the amplitude or a 6-dB increase in sensitivity from a point at which the discontinuity signal drops rapidly to the baseline shall be defined as the extremity of the discontinuity. At this point, the scanning surface shall be marked at the position indicated by the center of the transducer. This shall be repeated to determine the other extremity. The length of the discontinuity shall be defined as the distance between these two marks. For discontinuities with signal amplitudes exceeding full screen height, 50 percent of full screen shall be considered half-peak amplitude. At this point, the scanning surface shall be marked at the position indicated by the center of the transducer. This shall be repeated to determine the other extremity. The length of the discontinuity shall be defined as the distance between these two marks. The maximum signal amplitude, length, depth, and position within the inspection zone shall be determined and reported for discontinuities yielding a signal amplitude equal to or exceeding the reject/repair line. The minimum recordable length of a discontinuity shall be 3 mm. When evaluating welds joining two members with different thicknesses at the weld, the thickness T shall be the lesser of the two thicknesses. The criteria for acceptance or rejection based on ultrasonic inspection will supplement a visual inspection. The sizes and surface conditions of the welds shall conform to the requirements indicated on the applicable plans and drawings and other sections of the specification. When ultrasonic inspection is used along with radiography, the limits specified under paragraph REFERENCE STANDARDS FOR EQUIPMENT, QUALIFICATIONS, AND CALIBRATION shall be the primary standard.

3.3.1 Investigation of Questionable Indications

An indication considered doubtful shall be brought to the attention of the Contracting Officer and, at the Contractor's option, the weld shall be repaired or investigated further. Indications detected within 10 mm of accessible surfaces shall be investigated further using liquid penetrant in accordance with ASTM E 165 or magnetic particle methods in accordance with ASTM E 709, as applicable, to determine if the surface is penetrated. Failure to locate the flaws by one of these methods shall necessitate further investigation by the other. For nonmagnetic materials, only dye penetrant inspection is required. Other questionable defects shall be

further investigated using modifications of the inspection procedure in accordance with paragraph GENERAL REQUIREMENTS.

3.3.2 Inspection of Repairs

All repairs shall undergo the same inspection procedure that originally revealed the discontinuities. Before acceptance, the welds shall meet the standards required for the original weld.

3.4 ACCEPTANCE/REJECTION LIMITS

Welds shall be accepted or rejected by ultrasonic indication in accordance with the following:

3.4.1 Full Penetration Butt Welds and Corner Welds

3.4.1.1 Class III

Welds shall be rejected on the basis of the following:

a. Any discontinuity with a reflection exceeding the established reject/repair line and with a length exceeding 13 mm. Adjacent discontinuities separated by sound metal with a dimension less than twice the length of the longest discontinuity shall be considered a single discontinuity.

b. Any discontinuity with a reflection equal to or exceeding 50 percent of the reject/repair line or with the level 8 dB more than the reject/repair line and with a length (L) exceeding 50 mm or LT, whichever is greater.

c. If the total cumulative length of discontinuities in any 300 mm of weld length exceeds 75 mm or 2 T, whichever is greater, that weld length shall be rejected.

3.4.2 Full Penetration Tee Welds

Full Penetration Tee Welds (for Incomplete Root Penetration): Any discontinuity with the reflection exceeding the established reject/repair line of the applicable class shall be rejected. Any discontinuity with a reflection exceeding 25 percent of the established reject/repair line up to and including the reject/repair line shall be rejected if its length exceeds 1/2 T in a direction transverse to the axis of the weld or LT parallel to the axis for all classes. If the total cumulative length of discontinuities in any 300 mm of weld length exceeds the limits of the applicable class, that weld length shall be rejected.

3.4.3 Partial and Full Penetration Tee Welds

Partial and Full Penetration Tee Weld Boundaries: The depth of weld penetration and weld cross section width at the through member surface shall be as indicated by applicable plans or drawings. Limits of discontinuities shall be as specified in preceding paragraphs.

3.4.4 Tee Weld Discontinuities

Such discontinuities extending into the through member shall be rejected if reflection exceeds the established reject/repair line.

-- End of Section --

SECTION 05120

STRUCTURAL STEEL

PART 1 GENERAL

1.1 REFERENCES

The publications listed below form a part of this specification to the extent referenced. The publications are referred to in the text by basic designation only.

AMERICAN INSTITUTE OF STEEL CONSTRUCTION (AISC)

AISC ASD Manual	(1989) Manual of Steel Construction Allowable Stress Design
AISC ASD/LRFD Vol II	(1992) Manual of Steel Construction Vol II: Connections
AISC LRFD Vol II	(1995) Manual of Steel Construction Load & Resistance Factor Design, Vol II: Structural Members, Specifications & Codes

AMERICAN SOCIETY FOR TESTING AND MATERIALS (ASTM)

ASTM A 6/A 6M	(1996b) General Requirements for Rolled Structural Steel Bars, Plates, Shapes, and Sheet Piling
ASTM A 36/A 36M	(1996) Carbon Structural Steel
ASTM A 307	(1994) Carbon Steel Bolts and Studs, 60 000 PSI Tensile Strength
ASTM A 325M	(1993) High-Strength Bolts for Structural Steel Joints (Metric)
ASTM A 490M	(1993) High-Strength Steel Bolts, Classes 10.9 and 10.9.3, for Structural Steel Joints (Metric)
ASTM A 563M	(1993) Carbon and Alloy Steel Nuts (Metric)
ASTM A 572/A 572M	(1994c) High-Strength Low-Alloy Columbium-Vanadium Structural Steel
ASTM F 844	(1990) Washers, Steel, Plain (Flat), Unhardened for General Use

AMERICAN SOCIETY OF MECHANICAL ENGINEERS (ASME)

ASME B46.1	(1995) Surface Texture (Surface Roughness, Waviness, and Lay)

AMERICAN WELDING SOCIETY (AWS)

AWS A2.4	(1993) Standard Symbols for Welding, Brazing and Nondestructive Examination
AWS D1.1	(1996) Structural Welding Code - Steel

STEEL STRUCTURES PAINTING COUNCIL (SSPC)

SSPC Paint 25	(1991) Red Iron Oxide, Zinc Oxide, Raw Linseed Oil and Alkyd Primer (without Lead and Chromate Pigments)

1.2 GENERAL REQUIREMENTS

Structural steel fabrication and erection shall be performed by an organization experienced in structural steel work of equivalent magnitude. The Contractor shall be responsible for correctness of detailing, fabrication, and for the correct fitting of structural members. Connections, for any part of the structure not shown on the contract drawings, shall be considered simple shear connections and shall be designed and detailed in accordance with pertinent provisions of AISC ASD Manual and AISC LRFD Vol II. Substitution of sections or modification of connection details will not be accepted unless approved by the Contracting Officer. AISC ASD Manual and AISC ASD/LRFD Vol II shall govern the work. Welding shall be in accordance with AWS D1.1. High-strength bolting shall be in accordance with AISC ASD Manual.

1.3 SUBMITTALS

Government approval is required for submittals with a "GA" designation; submittals having an "FIO" designation are for information only. The following shall be submitted in accordance with Section 01330 SUBMITTAL PROCEDURES:

SD-04 Drawings

Structural Steel System; GA|ED. Structural Connections; GA|ED.

Shop and erection details including members (with their connections) not shown on the contract drawings. Welds shall be indicated by standard welding symbols in accordance with AWS A2.4.

SD-08 Statements

Erection; FIO;AR.

Prior to erection, erection plan of the structural steel framing describing all necessary temporary supports, including the sequence of installation and removal.

SD-13 Certificates

Mill Test Reports; FIO;AR.

Certified copies of mill test reports for structural steel, structural bolts, nuts, washers and other related structural steel items, including attesting that the structural steel furnished contains no less than 25 percent recycled scrap steel and meets the requirements specified herein,

prior to the installation.

Welder Qualifications; FIO;AR.

Certified copies of welder qualifications test records showing qualification in accordance with AWS D1.1.

Fabrication; GA|ED.

A copy of the AISC certificate indicating that the fabrication plant meets the specified structural steelwork category.

SD-14 Samples

High Strength Bolts and Nuts; FIO;AR. Carbon Steel Bolts and Nuts; FIO;AR. Nuts Dimensional Style; FIO;AR. Washers; FIO;AR.

Random samples of bolts, nuts, and washers as delivered to the job site if requested, taken in the presence of the Contracting Officer and provided to the Contracting Officer for testing to establish compliance with specified requirements.

1.4 STORAGE

Material shall be stored out of contact with the ground in such manner and location as will minimize deterioration.

PART 2 PRODUCTS

2.1 STRUCTURAL STEEL

2.1.1 Carbon Grade Steel

Carbon grade steel shall conform to ASTM A 36/A 36M.

2.1.2 High-Strength Low-Alloy Steel

High-strength low-alloy steel shall conform to ASTM A 572/A 572M, Grade 50.

2.2 HIGH STRENGTH BOLTS AND NUTS

High strength bolts shall conform to ASTM A 325M , Type 1 with carbon steel nuts conforming to ASTM A 563M , Grade C.

2.3 CARBON STEEL BOLTS AND NUTS

Carbon steel bolts shall conform to ASTM A 307, Grade A with carbon steel nuts conforming to ASTM A 563M , Grade A.

2.4 NUTS DIMENSIONAL STYLE

Carbon steel nuts shall be Hex style when used with ASTM A 307 bolts or Heavy Hex style when used with ASTM A 325M or ASTM A 490M bolts.

2.5 WASHERS

Plain washers shall conform to ASTM F 844.

2.6 PAINT

Paint shall conform to SSPC Paint 25.

PART 3 EXECUTION

3.1 FABRICATION

Fabrication shall be in accordance with the applicable provisions of AISC ASD Manual. Fabrication and assembly shall be done in the shop to the greatest extent possible. The fabricating plant shall be certified under the AISC quality certification program for Category I structural steelwork. Compression joints depending on contact bearing shall have a surface roughness not in excess of 13 micrometer as determined by ASME B46.1, and ends shall be square within the tolerances for milled ends specified in ASTM A 6/A 6M. Structural steelwork, except surfaces of steel to be encased in concrete, surfaces to be field welded, surfaces to be fireproofed, and contact surfaces of friction-type high-strength bolted connections shall be prepared for painting in accordance with AISC ASD Manual and primed with the specified paint.

3.2 ERECTION

Erection of structural steel shall be in accordance with the applicable provisions of AISC ASD Manual.

3.2.1 Structural Connections

Anchor bolts and other connections between the structural steel and foundations shall be provided and shall be properly located and built into connecting work. Field welded structural connections shall be completed before load is applied.

3.2.2 Base Plates and Bearing Plates

Column base plates for columns and bearing plates for beams, girders, and similar members shall be provided. Base plates and bearing plates shall be provided with full bearing after the supported members have been plumbed and properly positioned, but prior to placing superimposed loads. Separate setting plates under column base plates will not be permitted. The area under the plate shall be damp-packed solidly with bedding mortar, except where nonshrink grout is indicated on the drawings. Bedding mortar and grout shall be as specified in Section 03300 CAST-IN-PLACE STRUCTURAL CONCRETE.

3.2.3 Field Priming

After erection, the field bolt heads and nuts, field welds, and any abrasions in the shop coat shall be cleaned and primed with paint of the same quality as that used for the shop coat.

-- End of Section --

SECTION 05210

STEEL JOISTS

PART 1 GENERAL

1.1 REFERENCES

The publications listed below form a part of this specification to the extent referenced. The publications are referred to in the text by basic designation only.

STEEL JOIST INSTITUTE (SJI)

SJI-01	(1994) Standard Specifications Load Tables and Weight Tables for Steel Joists and Joist Girders

1.2 SUBMITTALS

Government approval is required for submittals with a "GA" designation; submittals having an "FIO" designation are for information only. The following shall be submitted in accordance with Section 01330 SUBMITTAL PROCEDURES:

SD-04 Drawings

Steel Joists; GA|ED.

Detail drawings shall include fabrication and erection details, specifications for shop painting, and identification markings of joists.

SD-13 Certificates

Steel Joists; FIO;AR.

Certificates stating that the steel joists have been designed and manufactured in accordance with SJI-01. Complete engineering design computations may be submitted in lieu of the certification.

1.3 DESCRIPTION

Steel joists are designated on the drawings in accordance with the standard designations of the Steel Joist Institute. Joists of other standard designations or joists with properties other than those shown may be substituted for the joists designated provided the structural properties are equal to or greater than those of the joists shown and provided all other specified requirements are met.

1.4 DELIVERY AND STORAGE

Materials shall be delivered to the site in undamaged condition and stored off the ground in a well drained location, protected from damage, and easily accessible for inspection and handling.

PART 2 PRODUCTS

2.1 OPEN WEB STEEL JOISTS

Open web steel joists shall conform to SJI-01, K-Series. Joists shall be designed to support the loads given in the standard load tables of SJI-01.

2.2 ACCESSORIES AND FITTINGS

Accessories and fittings, including end supports and bridging, shall be in accordance with the standard specifications under which the members were designed.

2.3 SHOP PAINTING

Joists and accessories shall be shop painted with a rust-inhibiting primer paint. For joists which will be finish painted under Section 09900 PAINTING, GENERAL, the primer paint shall be limited to a primer which is compatible with the specified finish paint.

PART 3 EXECUTION

3.1 ERECTION

Installation of joists shall be in accordance with the standard specification under which the member was produced. Joists shall be handled in a manner to avoid damage. Damaged joists shall be removed from the site, except when field repair is approved and such repairs are satisfactorily made in accordance with the manufacturer's recommendations. Joists shall be accurately set, and end anchorage shall be in accordance with the standard specification under which the joists were produced. For spans over 12 m through 18 m one row of bridging nearest midspan shall be bolted diagonal bridging; for spans over 18 m bolted diagonal bridging shall be used instead of welded horizontal bridging. Joist bridging and anchoring shall be secured in place prior to the application of any construction loads. Any temporary loads shall be distributed so that the carrying capacity of any joist is not exceeded. Loads shall not be applied to bridging during construction or in the completed work. Abraded, corroded, and field welded areas shall be cleaned and touched up with the same type of paint used in the shop painting.

3.2 BEARING PLATES

Bearing plates shall be provided with full bearing after the supporting members have been plumbed and properly positioned, but prior to placing superimposed loads. The area under the plate shall be damp-packed solidly with bedding mortar, except where nonshrink grout is indicated on the drawings. Bedding mortar and grout shall be as specified in Section 03300 CAST-IN-PLACE STRUCTURAL CONCRETE.

-- End of Section --

SECTION 05300

STEEL DECKING

PART 1 GENERAL

1.1 REFERENCES

The publications listed below form a part of this specification to the extent referenced. The publications are referred to in the text by basic designation only.

AMERICAN IRON AND STEEL INSTITUTE (AISI)

AISI-01	(1986; Addenda 1989) Cold-Formed Steel Design Manual

AMERICAN SOCIETY FOR TESTING AND MATERIALS (ASTM)

ASTM A 611	(1994) Steel, Sheet, Carbon, Cold-Rolled, Structural Quality
ASTM A 653	(1995) Steel Sheet, Zinc-Coated (Galvanized) or Zinc-Iron Alloy coated (Galvannealed) by the Hot-Dip Process
ASTM A 780	(1993a) Repair of Damaged and Uncoated Areas of Hot-Dipped Galvanized Coatings
ASTM A 792	(1995) Steel Sheet, 55% Aluminum-Zinc Alloy-Coated by the Hot-Dip Process, General Requirements

AMERICAN WELDING SOCIETY (AWS)

AWS D1.3	(1989) Structural Welding Code - Sheet Steel

STEEL DECK INSTITUTE (SDI)

SDI-02	(1987; Amended 1991) Diaphragm Design Manual
SDI Pub No 28	(1995) Design Manual for Composite Decks, Form Decks, Roof Decks, and Cellular Metal Floor Deck with Electrical Distribution

STEEL STRUCTURES PAINTING COUNCIL (SSPC)

SSPC Paint 20	(1991) Zinc-Rich Primers (Type I - Inorganic and Type II - Organic)

1.2 SUBMITTALS

Government approval is required for submittals with a "GA" designation; submittals having an "FIO" designation are for information only. The

following shall be submitted in accordance with Section 01330 SUBMITTAL PROCEDURES:

SD-01 Data

Deck Units; GA|ED.

Design computations for the structural properties of the deck units or SDI certification that the units are designed in accordance with SDI specifications.

SD-04 Drawings

Deck Units; GA|ED. Accessories; GA|ED.
Attachments; GA|ED. Holes and Openings; GA|ED.

Drawings shall include type, configuration, structural properties, location, and necessary details of deck units, accessories, and supporting members; size and location of holes to be cut and reinforcement to be provided; location and sequence of welded connections; and the manufacturer's erection instructions.

SD-13 Certificates

Deck Units; FIO;AR. Attachments; FIO;AR.

Manufacturer's certificates attesting that the decking material meets the specified requirements. Manufacturer's certificate attesting that the operators are authorized to use the low-velocity piston tool.

SD-14 Samples

Deck Units; FIO;AR. Accessories; FIO;AR.

A 0.19 sq meter sample of the decking material to be used, along with a sample of each of the accessories used. A sample of acoustical material to be used shall be included.

SD-18 Statements

Attachments; FIO;AR.

Prior to welding operations, copies of qualified procedures and lists of names and identification symbols of qualified welders and welding operators.

1.3 DELIVERY, STORAGE, AND HANDLING

Deck units shall be delivered to the site in a dry and undamaged condition, stored off the ground with one end elevated, and stored under a weathertight covering permitting good air circulation. Finish of deck units shall be maintained at all times by using touch-up paint whenever necessary to prevent the formation of rust.

PART 2 PRODUCTS

2.1 DECK UNITS

Deck units shall conform to SDI Pub No 28. Panels of maximum possible lengths shall be used to minimize end laps. Fabricate deck units in

lengths to span 3 or more supports with flush, telescoped, or nested 50 mm laps at ends, and interlocking, or nested side laps, unless otherwise indicated. Deck with cross-sectional configuration differing from the units indicated may be used, provided that the properties of the proposed units, determined in accordance with AISI-01, are equal to or greater than the properties of the units indicated and that the material will fit the space provided without requiring revisions to adjacent materials or systems.

2.1.1 Roof Deck

Roof deck units shall be fabricated of the steel design thickness required by the design drawings and shall be zinc-coated in conformance with ASTM A 653, G90 coating class or aluminum-zinc coated in accordance with ASTM A 792 Coating Designation AZ55.

2.1.2 Composite Deck

Deck to receive concrete as a filler or for composite deck assembly shall conform to ASTM A 653 or ASTM A 611. Deck used as the tension reinforcing in composite deck shall be fabricated of the steel design thickness required by the design drawings, and shall be zinc-coated in conformance with ASTM A 653, G90 coating class. Deck units used in composite deck shall have adequate embossment to develop mechanical shear bond to provide composite action between the deck and the concrete.

2.2 TOUCH-UP PAINT

Touch-up paint for zinc-coated units shall be an approved galvanizing repair paint with a high-zinc dust content. Welds shall be touched-up with paint conforming to SSPC Paint 20 in accordance with ASTM A 780. Finish of deck units and accessories shall be maintained by using touch-up paint whenever necessary to prevent the formation of rust.

2.3 ADJUSTING PLATES

Adjusting plates or segments of deck units shall be provided in locations too narrow to accommodate full-size units. As far as practical, the plates shall be the same thickness and configuration as the deck units.

2.4 CLOSURE PLATES

2.4.1 Closure Plates for Roof Deck

Voids above interior walls shall be closed with sheet metal where shown. Open deck cells at parapets, end walls, eaves, and openings through roofs shall be closed with sheet metal. Sheet metal shall be same thickness as deck units.

2.4.2 Closure Plates for Composite Deck

The concrete shall be supported and retained at each floor level. Provide edge closures at all edges of the slab of sufficient strength and stiffness to support the wet concrete. Metal closures shall be provided for all openings in composite steel deck 6 mm and over, including but not limited to:

2.4.2.1 Cover Plates to Close Panels

Cover plates to close panel edge and end conditions and where panels change

direction or abut. Butt joints in composite steel deck may receive a tape joint cover.

2.4.2.2 Column Closures to Close Openings

Column closures to close openings between steel deck and structural steel columns.

2.4.2.3 Sheet Metal

Where deck is cut for passage of pipes, ducts, columns, etc., and deck is to remain exposed, provide a neatly cut sheet metal collar to cover edges of deck. Do not cut deck until after installation of supplemental supports.

2.5 ACCESSORIES

The manufacturer's standard accessories shall be furnished as necessary to complete the deck installation. Metal accessories shall be of the same material as the deck and have minimum design thickness as follows: saddles, 1.204 mm (0.0474 inch); welding washers, 1.519 mm (0.0598 inch); cant strip, 0.749 mm (0.0295 inch); other metal accessories, 0.909 mm (0.0358 inch); unless otherwise indicated. Accessories shall include but not be limited to saddles, welding washers, cant strips, butt cover plates, underlapping sleeves, and ridge and valley plates.

PART 3 EXECUTION

3.1 ERECTION

Erection of deck and accessories shall be in accordance with SDI Pub No 28 and SDI-02 and the approved detail drawings. Damaged deck and accessories including material which is permanently stained or contaminated, with burned holes or deformed shall not be installed. The deck units shall be placed on secure supports, properly adjusted, and aligned at right angles to supports before being permanently secured in place. The deck shall not be filled with concrete, used for storage or as a working platform until the units have been secured in position. Loads shall be distributed by appropriate means to prevent damage during construction and to the completed assembly. The maximum uniform distributed storage load shall not exceed the design live load. There shall be no loads suspended directly from the steel deck.

3.2 ATTACHMENTS

All fasteners shall be installed in accordance with the manufacturer's recommended procedure, except as otherwise specified. The deck units shall be welded with nominal 16 mm diameter puddle welds to supports as indicated on the design drawings and in accordance with requirements of SDI Pub No 28. All sidelaps shall be welded. All welding of steel deck shall be in accordance with AWS D1.3 using methods and electrodes as recommended by the manufacturer of the steel deck being used. Welds shall be made only by operators previously qualified by tests prescribed in AWS D1.3 to perform the type of work required. Welding washers shall not be used at the connections of the deck to supports. Welding washers shall not be used at sidelaps. Holes and similar defects will not be acceptable. Deck ends shall be lapped 50 mm. All partial or segments of deck units shall be attached to structural supports in accordance with Section 2.5 of SDI-02.

3.3 HOLES AND OPENINGS

All holes and openings required shall be coordinated with the drawings, specifications, and other trades. Holes and openings shall be drilled or cut, reinforced and framed as indicated on the drawings or described in the specifications and as required for rigidity and load capacity. Holes and openings less than 150 mm across require no reinforcement. Holes and openings 150 to 300 mm across shall be reinforced by 1.204 mm (0.0474 inch) thick steel sheet at least 300 mm wider and longer than the opening and be fastened to the steel deck at each corner of the sheet and at a maximum of 150 mm on center. Holes and openings larger than 300 mm shall be reinforced by steel angles installed perpendicular to the steel joists and supported by the adjacent steel joists. Steel angles shall be installed perpendicular to the deck ribs and shall be fastened to the angles perpendicular to the steel joists. Openings must not interfere with seismic members such as chords and drag struts.

3.4 PREPARATION OF FIRE-PROOFED SURFACES

Deck surfaces, both composite and noncomposite, which are to receive sprayed-on fireproofing, shall be galvanized and shall be free of all grease, mill oil, paraffin, dirt, salt, and other contaminants which impair adhesion of the fireproofing. Any required cleaning shall be done prior to steel deck installation using a cleaning method that is compatible with the sprayed-on fireproofing.

-- End of Section --

SECTION 05500

MISCELLANEOUS METAL

PART 1 GENERAL

1.1 REFERENCES

The publications listed below form a part of this specification to the extent referenced. The publications are referred to in the text by basic designation only.

ALUMINUM ASSOCIATION (AA)

AA DAF-45	(1980; R 1993) Designation System for Aluminum Finishes

AMERICAN NATIONAL STANDARDS INSTITUTE (ANSI)

ANSI A14.3	(1992) Ladders - Fixed - Safety Requirements

AMERICAN SOCIETY FOR TESTING AND MATERIALS (ASTM)

ASTM A 36	(1996) Carbon Structural Steel
ASTM A 53	(1996) Pipe, Steel, Black and Hot-Dipped, Zinc-Coated, Welded and Seamless
ASTM A 123	(1989a) Zinc (Hot-Dip Galvanized) Coatings on Iron and Steel Products
ASTM A 283	(1993a) Low and Intermediate Tensile Strength Carbon Steel Plates
ASTM A 467	(1993) Machine and Coil Chain
ASTM A 475	(1995) Zinc-Coated Steel Wire Strand
ASTM A 500	(1993) Cold-Formed Welded and Seamless Carbon Steel Structural Tubing in Rounds and Shapes
ASTM A 653	(1996) Steel Sheet, Zinc-Coated (Galvanized) or Zinc-Iron Alloy-Coated (Galvannealed) by the Hot-Dip Process
ASTM A 924	(1996a) Steel Sheet, Metallic-Coated by the Hot-Dip Process
ASTM D 2047	(1993) Static Coefficient of Friction of Polish-Coated Floor Surfaces as Measured by the James Machine

AMERICAN SOCIETY OF CIVIL ENGINEERS (ASCE)

ASCE 7	(1995) Minimum Design Loads for Buildings and Other Structures

AMERICAN WELDING SOCIETY (AWS)

AWS D1.1	(1994) Structural Welding Code - Steel

COMMERCIAL ITEM DESCRIPTIONS (CID)

CID A-A-344	(Rev B) Lacquer, Clear Gloss, Exterior, Interior

NATIONAL FIRE PROTECTION ASSOCIATION (NFPA)

NFPA 211	(1992) Chimneys, Fireplaces, Vents and Solid Fuel-Burning Appliances

1.2 SUBMITTALS

Government approval is required for submittals with a "GA" designation; submittals having an "FIO" designation are for information only. The following shall be submitted in accordance with Section 01330 SUBMITTAL PROCEDURES:

SD-04 Drawings

Miscellaneous Metal Items; GA|ED.

Detail drawings indicating material thickness, type, grade, and class; dimensions; and construction details. Drawings shall include catalog cuts, erection details, manufacturer's descriptive data and installation instructions, and templates. Detail drawings for the following items: Steel door frames, Access doors and panels, and Steel stairs.

SD-14 Samples

Miscellaneous Metal Items; FIO;AR.

Samples of the following items: Samples shall be full size, taken from manufacturer's stock, and shall be complete as required for installation in the structure. Samples may be installed in the work, provided each sample is clearly identified and its location recorded.

1.3 GENERAL REQUIREMENTS

The Contractor shall verify all measurements and shall take all field measurements necessary before fabrication. Welding to or on structural steel shall be in accordance with AWS D1.1. Items specified to be galvanized, when practicable and not indicated otherwise, shall be hot-dip galvanized after fabrication. Galvanizing shall be in accordance with ASTM A 123, ASTM A 653, or ASTM A 924, as applicable. Exposed fastenings shall be compatible materials, shall generally match in color and finish, and shall harmonize with the material to which fastenings are applied. Materials and parts necessary to complete each item, even though such work is not definitely shown or specified, shall be included. Poor matching of holes for fasteners shall be cause for rejection. Fastenings shall be concealed where practicable. Thickness of metal and details of assembly and supports shall provide strength and stiffness. Joints exposed to the weather shall be formed to exclude water.

1.4 DISSIMILAR MATERIALS

Where dissimilar metals are in contact, or where aluminum is in contact with concrete, mortar, masonry, wet or pressure-treated wood, or absorptive materials subject to wetting, the surfaces shall be protected with a coat of bituminous paint or asphalt varnish.

1.5 WORKMANSHIP

Miscellaneous metalwork shall be well formed to shape and size, with sharp lines and angles and true curves. Drilling and punching shall produce clean true lines and surfaces. Welding shall be continuous along the entire area of contact except where tack welding is permitted. Exposed connections of work in place shall not be tack welded. Exposed welds shall be ground smooth. Exposed surfaces of work in place shall have a smooth finish, and unless otherwise approved, exposed riveting shall be flush. Where tight fits are required, joints shall be milled. Corner joints shall be coped or mitered, well formed, and in true alignment. Work shall be accurately set to established lines and elevations and securely fastened in place. Installation shall be in accordance with manufacturer's installation instructions and approved drawings, cuts, and details.

1.6 ANCHORAGE

Anchorage shall be provided where necessary for fastening miscellaneous metal items securely in place. Anchorage not otherwise specified or indicated shall include slotted inserts made to engage with the anchors, expansion shields, and power-driven fasteners when approved for concrete; toggle bolts and through bolts for masonry; machine and carriage bolts for steel; and lag bolts and screws for wood.

1.7 ALUMINUM FINISHES

Unless otherwise specified, aluminum items shall have standard mill finish. The thickness of the coating shall be not less than that specified for protective and decorative type finishes for items used in interior locations or architectural Class I type finish for items used in exterior locations in AA DAF-45. Items to be anodized shall receive a polished satin finish. Aluminum surfaces to be in contact with plaster or concrete during construction shall be protected with a field coat conforming to CID A-A-344.

1.8 SHOP PAINTING

Surfaces of ferrous metal except galvanized surfaces, shall be cleaned and shop coated with the manufacturer's standard protective coating unless otherwise specified. Surfaces of items to be embedded in concrete shall not be painted. Items to be finish painted shall be prepared according to manufacturer's recommendations or as specified.

PART 2 PRODUCTS

2.1 ACCESS DOORS AND PANELS

Doors and panels shall be flush type unless otherwise indicated. Frames for access doors shall be fabricated of not lighter than 1.52 mm (16 gauge) steel with welded joints and finished with anchorage for securing into construction. Access doors shall be sized to suit each location and use,

but shall be a minimum of 200 by 200 mm and of not lighter than 1.9 mm (14 gauge) steel, with stiffened edges, complete with attachments. Access doors shall be hinged to frame and provided with a flush face, screw driver operated latch. Exposed metal surfaces shall have a shop applied prime coat, and shall be field painted to match adjacent surface. At drywall partition, doors shall be recessed type to accept a gypsum board finish surface, with fully concealed hinges. Concealed frame shall have a continuous flange with casing bead for finishing edge of opening with joint compound. Access doors in fire-rated walls and ceilings shall have fire ratings equivalent to construction in which they occur..

2.2 CHIMNEYS, VENTS, AND SMOKESTACKS

Chimneys and vents shall be designed and constructed in accordance with NFPA 211. Chimney connectors shall be formed of not lighter than 1.01 mm (20 gauge) galvanized steel. Stacks shall be designed and constructed to withstand a wind velocity of 144.4 km/h in accordance with ASCE 7. Unlined stacks shall be constructed of black-steel plates not less than 5 mm thick conforming to ASTM A 36. Seams and joints shall be welded, except that an angle flange shall be provided for connection to the boiler, other equipment, and stack support.

2.3 PIPE GUARDS

Pipe guards shall be heavy duty steel pipe conforming to ASTM A 53, Type E or S, weight STD, black finish.

2.4 EXPANSION JOINT COVERS

Expansion joint covers shall be constructed of extruded aluminum with anodized satin finish for walls and ceilings and with standard mill finish for floor covers and exterior covers. Plates, backup angles, expansion filler strip and anchors shall be designed as indicated. Expansion joint system shall provide 50 mm movement. Refer to details indicated on drawings.

2.5 FLOOR PLATES

Floor plates shall be 6 mm thick, slip-resistant, carbon steel conforming to ASTM A 283 having a minimum static coefficient of friction of 0.50 when tested in accordance with ASTM D 2047. Wearing surface shall be aluminum oxide or silicon carbide.

2.6 FOUNDATION VENTS

Foundation vents shall be the same size as the masonry units or sized as indicated, and shall be of extruded aluminum with integral water stop and sliding interior closer or damper operable from the outside. Insect screen shall be provided at the back of the vent. Louvered opening shall have top and bottom drip lips, and the net ventilating area with closer or damper open shall be at least 35 percent of the gross wall opening. The frames shall have a structural strength adequate to permit use in masonry walls without a lintel.

2.7 HANDRAILS

Handrails shall be designed to resist a concentrated load of 890 N (200 pounds) in any direction at any point of the top of the rail or 292 Newtons per meter (20 pounds per foot) applied horizontally to top of the

rail, whichever is more severe.

2.7.1 Steel Handrails, Including Carbon Steel Inserts

Steel handrails, including inserts in concrete, shall be steel pipe conforming to ASTM A 53 or structural tubing conforming to ASTM A 500, Grade A or B of equivalent strength. Steel railings shall be 40 mm nominal size. Railings shall be hot-dip galvanized and shop prime-painted. Pipe collars shall be hot-dip galvanized steel, finished to match color indicated.

a. Joint posts, rail, and corners shall be fabricated by one of the following methods:

(1) Flush type rail fittings of commercial standard, welded and ground smooth with railing splice locks secured with 10 mm hexagonal recessed-head setscrews.

(2) Mitered and welded joints by fitting post to top rail and intermediate rail to post, mitering corners, groove welding joints, and grinding smooth. Railing splices shall be butted and reinforced by a tight fitting interior sleeve not less than 150 mm long.

(3) Railings may be bent at corners in lieu of jointing, provided bends are made in suitable jigs and the pipe is not crushed.

b. Removable sections, toe-boards, and brackets shall be provided as indicated.

2.8 GUY CABLES

Guy cables shall be prestretched, galvanized wire rope of the sizes indicated. Wire rope shall conform to ASTM A 475, high strength grade with Class A coating. Guys shall have a factory attached clevis top-end fitting; guys shall have a factory attached open-bridge strand socket bottom-end fitting; guys shall be complete with oval eye, threaded anchor rods. Fittings and accessories shall be hot-dip galvanized.

2.9 LADDERS

Ladders shall be galvanized steel or aluminum, fixed rail type in accordance with ANSI A14.3.

2.10 MISCELLANEOUS

Miscellaneous plates and shapes for items that do not form a part of the structural steel framework, such as lintels, sill angles, miscellaneous mountings, and frames, shall be provided to complete the work.

2.11 SAFETY CHAINS

Safety chains shall be galvanized welded steel, proof coil chain tested in accordance with ASTM A 467, Class CS. Safety chains shall be straight link style, 5 mm diameter, minimum 39 links per meter (12 links per foot) and with bolt type snap hooks on each end. Eye bolts for attachment of chains shall be galvanized 10 mm bolt with 19 mm eye, anchored as indicated. Two chains shall be furnished for each guarded opening.

2.12 SAFETY NOSING

Safety nosings shall be of cast aluminum with cross-hatched, abrasive surface. Nosing shall be 75 mm wide and terminating at not more than 150 mm from the ends of treads, except nosing for metal pan cement-filled treads shall extend the full length of the tread. Safety nosings shall be provided with anchors not less than 19 mm long. Integrally cast mushroom anchors are not acceptable.

2.13 STEEL STAIRS

Steel stairs shall be complete with structural or formed channel stringers, metal pan cement-filled treads (for interior stairs), landings, columns, handrails, and necessary bolts and other fastenings as indicated. Structural steel shall conform to ASTM A 36. Stairs and accessories shall be galvanized. Risers on stairs with metal pan treads shall be deformed to form a sanitary cove to retain the tread concrete. Integral nosings shall have braces extended into the concrete fill.

2.14 STEEL DOOR FRAMES

Steel door frames built from structural shapes shall be neatly mitered and securely welded at the corners with all welds ground smooth. Jambs shall be provided with 50 by 6 by 300 mm bent, adjustable metal anchors spaced not over 760 mm on centers. Provision shall be made to stiffen the top member for all spans over 900 mm. Continuous door stops shall be made of 38 by 16 mm bars.

PART 3 EXECUTION

3.1 GENERAL INSTALLATION REQUIREMENTS

All items shall be installed at the locations shown and according to the manufacturer's recommendations. Items listed below require additional procedures as specified.

3.2 REMOVABLE ACCESS PANELS

A removable access panel not less than 200 by 200 mm shall be installed directly below each valve, flow indicator, damper, or air splitter that is located above the ceiling, other than an acoustical ceiling, and that would otherwise not be accessible.

3.3 INSTALLATION OF CHIMNEYS, VENTS, AND SMOKESTACKS

Chimneys and vents shall be installed in accordance with NFPA 211. A cleanout opening with a tight-fitting, hinged, cast-iron door and frame shall be provided at the base of each smokestack. A top band shall be provided on stacks for attachment of painter's rigging. Roof housing, rain cap, downdraft diverter, fire damper, and other accessories required for a complete installation shall be provided. Sections of prefabricated lined stacks shall be joined with acid-resisting high-temperature cement and steel draw bands. Means to prevent accumulation of water in the smokestack shall be provided.

3.4 INSTALLATION OF PIPE GUARDS

Pipe guards shall be set vertically in concrete piers. Piers shall be constructed of, and the hollow cores of the pipe filled with, concrete having a compressive strength of 21 MPa.

3.5 ATTACHMENT OF HANDRAILS

Toeboards and brackets shall be installed where indicated. Splices, where required, shall be made at expansion joints. Removable sections shall be installed as indicated.

3.5.1 Installation of Steel Handrails

Installation shall be in pipe sleeves embedded in concrete and filled with non-shrink grout with anchorage covered with standard pipe collar pinned to post, to masonry with expansion shields and bolts or toggle bolts, or bolted to stringers or structural steel framework. Rail ends shall be secured by steel pipe flanges anchored by expansion shields and bolts or through-bolted to a back plate or by 6 mm lag bolts to studs or solid backing.

3.6 ERECTION OF GUY CABLES

Guy cables shall be erected as indicated. Anchor rods shall be cast in concrete located and reinforced as shown.

3.7 MOUNTING OF SAFETY CHAINS

Safety chains shall be mounted 1070 mm and 610 mm above the floor.

3.8 INSTALLATION OF SAFETY NOSINGS

Nosing shall be completely embedded in concrete before the initial set of the concrete occurs and shall finish flush with the top of the concrete surface.

3.9 DOOR FRAMES

Door frames shall be secured to the floor slab by means of angle clips and expansion bolts. Continuous door stops shall be welded to the frame or tap screwed with countersunk screws at no more than 450 mm centers, assuring in either case full contact with the frame. Any necessary reinforcements shall be made and the frames shall be drilled and tapped as required for hardware.

-- End of Section --

SECTION 06100

ROUGH CARPENTRY

PART 1 GENERAL

1.1 REFERENCES

The publications listed below form a part of this specification to the extent referenced. The publications are referred to in the text by basic designation only.

AMERICAN FOREST AND PAPER ASSOCIATION (AFPA)

AFPA-T901	(1991; Supple 1993; Addenda Apr 95)National Design Specification for Wood Construction
AFPA T11-WCD1	(1988) Manual for Wood Frame Construction

AMERICAN HARDBOARD ASSOCIATION (AHA)

AHA A194.1	(1985) Cellulosic Fiberboard

AMERICAN INSTITUTE OF TIMBER CONSTRUCTION (AITC)

AITC 111	(1979) Recommended Practice for Protection of Structural Glued Laminated Timber During Transit, Storage and Erection

APA-THE ENGINEERED WOOD ASSOCIATION (APA)

APA E445	(1991; Rev Jan 1996) Performance Standards and Policies for Structural-Use Panels
APA EWS R540	(1996) Proper Storage and Handling of Glulam Beams

AMERICAN SOCIETY FOR TESTING AND MATERIALS (ASTM)

ASTM A 307	(1994) Carbon Steel Bolts and Studs, 60 000 PSI Tensile Strength
ASTM C 208	(1995) Cellulosic Fiber Insulating Board
ASTM C 518	(1991) Steady-State Heat Flux Measurements and Thermal Transmission Properties By Means of the Heat Flow Meter Apparatus
ASTM C 552	(1991) Cellular Glass Thermal Insulation
ASTM C 553	(1992) Mineral Fiber Blanket Thermal Insulation for Commercial and Industrial Applications
ASTM C 578	(1995) Rigid, Cellular Polystyrene Thermal

	Insulation
ASTM C 591	(1994) Unfaced Preformed Rigid Cellular Polyisocyanurate Thermal Insulation
ASTM C 612	(1993) Mineral Fiber Block and Board Thermal Insulation
ASTM C 665	(1994) Mineral-Fiber Blanket Thermal Insulation for Light Frame Construction and Manufactured Housing
ASTM C 726	(1993) Mineral Fiber Roof Insulation Board
ASTM C 1013	(1994) Faced Rigid Cellular Polyisocyanurate Roof Insulation
ASTM C 1136	(1992) Flexible, Low Permeance Vapor Retarders for Thermal Insulation
ASTM C 1289	(1995) Faced Rigid Cellular
ASTM D 2898	(1994) Accelerated Weathering of Fire-Retardant-Treated Wood for Fire Testing
ASTM E 84	(1996a) Surface Burning Characteristics of Building Materials
ASTM E 96	(1995) Water Vapor Transmission of Materials
ASTM E 154	(1988; R 1993) Water Vapor Retarders Used in Contact with Earth Under Concrete Slabs, on Walls, or as Ground Cover
ASTM F 547	(1977; R 1990) Definitions of Terms Relating to Nails for Use with Wood and Wood-Base Materials

AMERICAN WOOD-PRESERVERS' ASSOCIATION (AWPA)

AWPA C2	(1995) Lumber, Timber, Bridge Ties and Mine Ties - Preservative Treatment by Pressure Processes
AWPA C9	(1995) Plywood - Preservative Treatment by Pressure Processes
AWPA C20	(1993) Structural Lumber Fire-Retardant Pressure Treatment
AWPA C27	(1993) Plywood - Fire-Retardant Pressure Treatment
AWPA M4	(1995) Standard for the Care of Preservative-Treated Wood Products
AWPA P5	(1996) Standards for Waterborne

Preservatives

CALIFORNIA REDWOOD ASSOCIATION (CRA)

CRA-01	(1995) Standard Specifications for Grades of California Redwood Lumber

DEPARTMENT OF COMMERCE (DOC)

DOC PS 1	(1996) Voluntary Product Standard - Construction and Industrial Plywood
DOC PS 2	(1992) Performance Standards for Wood-Based Structural-Use Panels

FACTORY MUTUAL ENGINEERING AND RESEARCH (FM)

FM P7825c	(1997) Approval Guide Building Materials

NATIONAL HARDWOOD LUMBER ASSOCIATION (NHLA)

NHLA-01	(1994) Rules for the Measurement & Inspection of Hardwood & Cypress

NORTHEASTERN LUMBER MANUFACTURERS ASSOCIATION (NELMA)

NELMA-01	(1993) Standard Grading Rules for Northeastern Lumber

SOUTHERN CYPRESS MANUFACTURERS ASSOCIATION (SCMA)

SCMA-01	(1986; Supple No. 1, Aug 1993) Standard Specifications for Grades of Southern Cypress

SOUTHERN PINE INSPECTION BUREAU (SPIB)

SPIB-1001	(1994) Standard Grading Rules for Southern Pine Lumber

WEST COAST LUMBER INSPECTION BUREAU (WCLIB)

WCLIB Std 17	(1993) Supples III (A), V (A), & VI (A)) Grading Rules for West Coast Lumber

WESTERN WOOD PRODUCTS ASSOCIATION (WWPA)

WWPA-01	(1995; Supple Nos. 1, 2, and 3) Western Lumber Grading Rules 95

1.2 SUBMITTALS

Government approval is required for submittals with a "GA" designation; submittals having an "FIO" designation are for information only. The following shall be submitted in accordance with Section 01330 SUBMITTAL PROCEDURES:

SD-01 Data

Structural Wood Members; FIO;AR.

Design analysis and calculations of structural laminated members, fabricated wood trusses, and other fabricated structural members showing design criteria used to accomplish the applicable analysis.

Product Installations; FIO;AR.

List containing name and location of successful installation of similar type of fabricated structural members specified herein.

SD-04 Drawings

Structural Wood Members; FIO;AR. Installation of Framing; FIO;AR.

Drawings of structural laminated members, fabricated wood trusses, engineered wood joists and rafters, and other fabricated structural members indicating materials, shop fabrication, and field erection details; including methods of fastening.

Nailers and Nailing Strips; FIO;AR.

Drawings of field erection details, including materials and methods of fastening nailers in conformance with Factory Mutual wind uplift rated systems specified in other Sections of these specifications.

SD-13 Certificates

Grading and Marking; FIO;AR.

Manufacturer's certificates (approved by an American Lumber Standards approved agency) attesting that lumber and material not normally grade marked meet the specified requirements. Certificate of Inspection for grade marked material by an American Lumber Standards Committee (ALSC) recognized inspection agency prior to shipment.

Insulation; GA|ED.

Certificate attesting that the cellulose, perlite, glass and mineral fiber, polyurethane, or polyisocyanurate insulation furnished for the project contains recovered material, and showing an estimated percent of such recovered material. In compliance wth the Resource Conservation and Recovery Act, the Contractor shall be responsible for using recycled and/or recovered materials to the maximum extent possible.

1.3 DELIVERY AND STORAGE

Materials shall be delivered to the site in undamaged condition, stored off ground in fully covered, well ventilated areas, and protected from extreme changes in temperature and humidity. Laminated timber shall be handled and stored in accordance with AITC 111 or APA EWS R540.

PART 2 PRODUCTS

2.1 LUMBER AND SHEATHING

2.1.1 Grading and Marking

2.1.1.1 Lumber Products

Solid sawn and finger-jointed lumber shall bear an authorized gradestamp or grademark recongnized by ALSC, or an ALSC recognized certification stamp, mark, or hammerbrand. Surfaces that are to be exposed to view shall not bear grademarks, stamps, or any type of identifying mark. Hammer marking will be permitted on timbers when all surfaces will be exposed to view.

2.1.1.2 Plywood and other Sheathing Products

Materials shall bear the grademark or other identifying marks indicating grades of material and rules or standards under which produced, including requirements for qualifications and authority of the inspection organization. Except for plywood and structural-use panels, bundle marking will be permitted in lieu of marking each individual piece. Surfaces that are to be exposed to view shall not bear grademarks or other types of identifying marks.

2.1.2 Sizes

Lumber and material sizes shall conform to requirements of the rules or standards under which produced. Unless otherwise specified, lumber shall be surfaced on four sides. Unless otherwise specified, sizes indicated are nominal sizes, and actual sizes shall be within manufacturing tolerances allowed by the standard under which the product is produced.

2.1.3 Treatment

Exposed areas of treated wood that are cut or drilled after treatment shall receive a field treatment in accordance with AWPA M4. Items of all-heart material of cedar, cypress, or redwood will not require preservative treatment, except when in direct contact with soil. Except as specified for all-heart material of the previously mentioned species, the following items shall be treated:

a. Wood members in contact with or within 455 mm of soil.

b. Wood members in contact with water.

c. Wood members exposed to the weather including those used in builtup roofing systems or as nailing strips or nailers over fiberboard or gypsum-board wall sheathing as a base for wood siding.

d. Wood members set into concrete regardless of location, including flush-with-deck wood nailers for roofs.

e. Wood members in contact with concrete that is in contact with soil or water or that is exposed to weather.

2.1.3.1 Lumber and Timbers

Lumber and timbers shall be treated in accordance with AWPA C2 with waterborne preservatives listed in AWPA P5 to a retention level as follows:

a. 4 kg per cubic meter (0.25 pcf) intended for above ground use.

b. 6.4 kg per cubic meter (0.40 pcf) intended for ground contact and fresh water use.

2.1.3.2 Plywood

Plywood shall be treated in accordance with AWPA C9 with waterborne preservatives listed in AWPA P5 to a retention level as follows:

a. 4 kg per cubic meter (0.25 pcf) intended for above ground use.

b. 6.4 kg per cubic meter (0.40 pcf) intended for ground contact and fresh water use.

2.1.4 Moisture Content

At the time lumber and other materials are delivered and when installed in the work their moisture content shall be as follows:

a. Treated and Untreated Lumber Except Roof Planking:

100 mm or less, nominal thickness, 19 percent maximum. 125 mm or more, nominal thickness, 23 percent maximum in a 75 mm perimeter of the timber cross-section.

b. Roof Planking: 15 percent maximum.

c. Materials Other Than Lumber: In accordance with standard under which product is produced.

2.1.5 Fire-Retardant Treatment

Fire-retardant treated wood shall be pressure treated in accordance with AWPA C20 for lumber and AWPA C27 for plywood. Material use shall be defined in AWPA C20 and AWPA C27 for Interior Type A and B and Exterior Type. Treatment and performance inspection shall be by an independent and qualified testing agency that establishes performance ratings. Each piece or bundle of treated material shall bear identification of the testing agency to indicate performance in accordance with such rating. Treated materials to be exposed to rain wetting shall be subjected to an accelerated weathering technique in accordance with ASTM D 2898 prior to being tested for compliance with AWPA C20 or AWPA C27.

2.1.6 Sheathing

Sheathing shall be fiberboard, gypsum board, plywood, structural-use panels, or wood for wall sheathing; and plywood, structural-use panels, or wood for roof sheathing.

2.1.6.1 Fiberboard

Fiberboard shall conform to ASTM C 208, Type IV, Grade 2, Structural Grade, or AHA A194.1, Type IV, Grade 2 asphalt impregnated or asphalt coated to be water-resistant but vapor permeable.

2.1.6.2 Plywood

Plywood shall conform to DOC PS 1, APA E445 or DOC PS 2, Grade C-D with exterior glue. Sheathing for roof and walls without corner bracing of framing shall have a span rating of 16/0 or greater for supports 400 mm on center and a span rating of 24/0 or greater for supports 600 mm on center.

2.1.7 Miscellaneous Wood Members

2.1.7.1 Nonstress Graded Members

Members shall include bridging, corner bracing, furring, grounds, and nailing strips. Members shall be in accordance with TABLE I for the species used. Sizes shall be as follows unless otherwise shown:

Member	Size mm (inch)
Bridging	25 x 75 (1 x 3) or 25 x 100 (1 x 4) for use between members 50 x 300 (2 x 12) and smaller; 50 x 100 (2 x 4) for use between members larger than 50 x 300 (2 x 12).
Corner bracing	25 x 100 (1 x 4).
Nailing strips	25 x 75 (1 x 3) or 25 x 100 (1 x 4) when used as shingle base or interior finish, otherwise 50 mm (2 inch) stock.

2.1.7.2 Blocking

Blocking shall be standard or number 2 grade.

2.2 ACCESSORIES AND NAILS

Markings shall identify both the strength grade and the manufacturer. Accessories and nails shall conform to the following:

2.2.1 Anchor Bolts

ASTM A 307, size as indicated, complete with nuts and washers.

2.2.2 Bolts: Lag, Toggle, and Miscellaneous Bolts and Screws

Type, size, and finish best suited for intended use. Finish options include zinc compounds, cadmium, and aluminum paint impregnated finishes.

2.2.3 Clip Angles

Steel, 5 mm (3/16 inch) thick, size best suited for intended use; or zinc-coated steel or iron commercial clips designed for connecting wood members.

2.2.4 Expansion Shields

Type and size best suited for intended use.

2.2.5 Joist Hangers

Steel or iron, zinc-coated, size to fit members where used, sufficient strength to develop the full strength of supported member, complete with any special nails required.

2.2.6 Metal Bridging

Optional to wood bridging; zinc-coated steel, size and design to provide

rigidity equivalent to specified wood bridging.

2.2.7 Nails and Staples

ASTM F 547, size and type best suited for purpose; staples shall be as recommended by the manufacturer of the materials to be joined. For sheathing and subflooring, length of nails shall be sufficient to extend 25 mm into supports. In general, 8-penny or larger nails shall be used for nailing through 25 mm thick lumber and for toe nailing 50 mm thick lumber; 16-penny or larger nails shall be used for nailing through 50 mm thick lumber. Nails used with treated lumber and sheathing shall be galvanized. Nailing shall be in accordance with the recommended nailing schedule contained in AFPA T11-WCD1. Where detailed nailing requirements are not specified, nail size and spacing shall be sufficient to develop an adequate strength for the connection. The connection's strength shall be verified against the nail capacity tables in AFPA-T901. Reasonable judgement backed by experience shall ensure that the designed connection will not cause the wood to split. If a load situation exceeds a reasonable limit for nails, a specialized connector shall be used.

2.3 INSULATION

Thermal resistance of insulation shall be not less than the R-values shown. R-values shall be determined at 24 degrees C in accordance with ASTM C 518. Insulation shall contain the highest practicable percentage of recovered material which has been recovered or diverted from solid waste, but not including material reused in a manufacturing process. Where two materials have the same price and performance, the one containing the higher recovered material content shall be provided. Insulation shall be the standard product of a manufacturer and factory marked or identified with manufacturer's name or trademark and R-value. Identification shall be on individual pieces or individual packages. Materials containing more than one percent asbestos will not be allowed.

2.3.1 Batt or Blanket

2.3.1.1 Glass Fiber Batts and Rolls

Glass fiber batts and rolls shall conform to ASTM C 665, Type I unfaced insulation, Type II kraft faced insulation, Type III foil faced insulation, Class A and B, having a UL rating of 25/50 and a smoke developed rating of 150 or less when tested in accordance with ASTM E 84. Insulation shall have a 0.25 mm (10 mil) thick, white, puncture resistant woven-glass cloth with vinyl facing on one side. Width and length shall suit construction conditions.

2.3.1.2 Mineral Fiber Batt

Mineral fiber batt shall conform to ASTM C 665, Type I unfaced insulation.

2.3.1.3 Mineral Fiber Blanket

Mineral fiber blanket shall conform to ASTM C 553, Type I, Class 6. Blankets shall be sized to suit construction conditions, resilient type for use below and above ambient temperature to 195 degrees C. Blankets shall have a factory applied vapor-barrrier facing on one side with 50 mm nailing tabs on both edges. Vapor barriers shall be fire retardant, high vapor transmission, and aluminum foil laminated to crepe paper type conforming to ASTM C 1136, Type II. Nominal density shall be 12 kg per

cubic meter.

2.3.2 Sill Sealer

Mineral wool, 25 mm thick and compressible to 0.8 mm, width of sill, designed to perform as an air, dirt, and insect seal in conformance with ASTM C 665, Type I.

2.3.3 Rigid Insulation

2.3.3.1 Polystyrene Board

Polystyrene board shall be extruded and conform to ASTM C 578, Type IV.

2.3.3.2 Polyurethane or Polyisocyanurate Board

Polyurethane or polyisocyanurate board shall conform to ASTM C 1013(having a minimum recovered material content of 9 percent by weight of core material in the polyurethane or polyisocyanurate portion). Unfaced preformed polyurethane shall conform to ASTM C 591. Faced polyisocyanurate shall conform to ASTM C 1289.

2.3.3.3 Glass Fiber or Insulation Board

Glass fiber or insulation board shall conform to ASTM C 612, Type 1A with a minimum recovered material content of 6 percent by weight of glass fiber core material.

2.3.3.4 Mineral Fiber Block and Board

Mineral fiber block and board shall conform to ASTM C 612 or ASTM C 726 with a minimum recovered material content of 5 percent by weight of mineral fiber core material.

2.3.3.5 Cellular Glass

Cellular glass shall conform to ASTM C 552.

2.4 VAPOR RETARDER

Vapor retarder shall be polyethylene sheeting conforming to ASTM E 154or other equivalent material. Vapor retarder shall have a maximum vapor permeance rating of 29 ng per Pa per second per square meter (0.5 perms) as determined in accordance with ASTM E 96, unless otherwise specified.

2.5 AIR INFILTRATION BARRIER

Air infiltration barrier shall be building paper meeting the requirements of ASTM C 1136, Type IV, style optional or a tear and puncture resistant olefin building wrap (polyethylene or polypropylene) with a moisture vapor transmission rate of 125 g per square meter per 24 hours in accordance with ASTM E 96, Desiccant Method at 23 degrees C or with a moisture vapor transmission rate of 670 g per square meter per 24 hours in accordance with ASTM E 96, Water Method at 23 degrees C.

PART 3 EXECUTION

3.1 INSTALLATION OF FRAMING AND MISCELLANEOUS WOOD MEMBERS

3.1.1 General

Members shall be closely fitted, accurately set to required lines and levels, and rigidly secured in place. Members shall be framed for passage of ducts. Members shall be cut, notched, or bored in accordance with applicable requirements of AFPA-T901 for the passage of pipes, wires, or conduits. Rafters, purlins, and joists shall be set with crown edge up. Framing shall be kept at least 50 mm away from chimneys and 100 mm away from fireplace backwalls. When joists, beams, and girders are placed on masonry or concrete, a wood base plate shall be positioned and leveled with grout. The joist, beam, or girder shall then be placed on the plate. When joists, beams, and girders are set into masonry or concrete, a pocket shall be formed into the wall. The joist, beam, or girder shall then be placed into the pocket and leveled with a steel shim.

3.2 INSTALLATION OF SHEATHING

3.2.1 Fiberboard

Sheathing shall be applied with edges 3 mm apart at joints, fitted snugly at abutting frames of openings, and nailed or stapled in accordance with the manufacturer's approved instructions. Sheets shall be applied vertically, extended over top and bottom plates, and with all vertical and horizontal joints over supports.

3.2.2 Plywood and Structural-Use Panels

Sheathing shall be applied with edges 3 mm apart at side and end joints, and nailed at supported edges at 150 mm on center and at intermediate supports 300 mm on center unless otherwise shown. Nailing of edges shall be 10 mm from the edges. Wall sheathing shall extend over top and bottom plates, and if applied horizontally the vertical joints shall be made over supports and staggered. Wall sheathing over which wood shingles are to be applied shall be applied horizontally. Roof sheathing shall be applied with long dimension at right angles to supports, end joints made over supports, and end joints staggered.

3.2.3 Wood

Sheathing end joints shall be made over framing members and so alternated that there will be at least two boards between joints on the same support. Each board shall bear on at least three supports. Boards shall be nailed at each support using two nails for boards 150 mm and less in width and three nails for boards more than 150 mm in width.

3.3 INSTALLATION OF MISCELLANEOUS WOOD MEMBERS

3.3.1 Bridging

Wood bridging shall have ends accurately bevel-cut to afford firm contact and shall be nailed at each end with two nails. Metal bridging shall be installed as recommended by the manufacturer. The lower ends of bridging shall be driven up tight and secured after subflooring or roof sheathing has been laid and partition framing installed.

3.3.2 Blocking

Blocking shall be provided as necessary for application of siding, sheathing, subflooring, wallboard, and other materials or building items,

and to provide firestopping. Blocking for firestopping shall ensure a maximum dimension of 2400 mm for any concealed space. Blocking shall be cut to fit between framing members and rigidly nailed thereto.

3.3.3 Nailers and Nailing Strips

Nailers and nailing strips shall be provided as necessary for the attachment of finish materials. Nailers used in conjunction with roof deck installation shall be installed flush with the roof deck system. Stacked nailers shall be assembled with spikes or nails spaced not more than 450 mm on center and staggered. Beginning and ending nails shall not be more than 150 mm for nailer end. Ends of stacked nailers shall be offset approximately 300 mm in long runs and alternated at corners. Anchors shall extend through the entire thickness of the nailer. Strips shall be run in lengths as long as practicable, butt jointed, cut into wood framing members when necessary, and rigidly secured in place. Nailers and nailer installation for Factory Mutual wind uplift rated roof systems specified in other Sections of these specifications shall conform to FM P7825c.

3.3.4 Furring Strips

Furring strips shall be provided at the locations shown. Furring strips shall be installed at 400 mm on center unless otherwise shown, run in lengths as long as practicable, butt jointed and rigidly secured in place.

3.3.5 Sill Plates

Sill plates shall be set level and square and anchor bolted at not more than 1800 mm on centers and not more than 300 mm from end of each piece. A minimum of two anchors shall be used for each piece.

3.4 INSTALLATION OF INSULATION

Insulation shall be installed after construction has advanced to a point that the installed insulation will not be damaged by remaining work. For thermal insulation the actual installed thickness shall provide the thermal resistance shown. For acoustical insulation the installed thickness shall be as shown. Insulation shall be installed on the weather side of such items as electrical boxes and water lines. Unless otherwise specified, installation shall be in accordance with the manufacturer's recommendation.

3.5 INSTALLATION OF VAPOR RETARDER

Vapor retarder shall be applied to provide a continuous barrier at window and door frames, and at all penetrations such as electrical outlets and switches, plumbing connections, and utility service penetrations. Joints in the vapor retarder shall be lapped and sealed according to the manufacturer's recommendations.

3.6 INSTALLATION OF AIR INFILTRATION BARRIER

Air infiltration barrier shall be installed in accordance with the manufacturer's recommendations.

TABLE I. SPECIES AND GRADE

Subflooring, Roof Sheathing, Wall Sheathing, Furring

Grading Rules	Species	Const Standard	No. 2 Comm	No. 2 Board Comm	No. 3 Comm
NHLA-01					
	Cypress			X	
NELMA-01					
	Northern White Cedar				X
	Eastern White Pine	X			
	Northern Pine	X			
	Balsam Fir				X
	Eastern Hemlock-Tamarack				X
CRA-01					
	Redwood		X		
SCMA-01					
	Cypress			X	
SPIB-1001					
	Southern Pine		X		
WCLIB Std 17					
	Douglas Fir-Larch	X			
	Hem-Fir	X			
	Sitka Spruce	X			
	Mountain Hemlock	X			
	Western Cedar	X			
WWPA-01					
	Douglas Fir-Larch	X			
	Hem-Fir	X			
	Idaho White Pine	X			
	Lodgepole Pine			X	
	Ponderosa Pine			X	
	Sugar Pine			X	
	Englemann Spruce			X	
	Douglas Fir South			X	
	Mountain Hemlock			X	
	Subalpine Fir			X	
	Western Cedar			X	

TABLE II. SPECIES AND GRADE

Wood Bumpers

Grading Rules	Species	No. 1	No. 2
NHLA-01			
	Red Oak	X	

TABLE II. SPECIES AND GRADE

Wood Bumpers

Grading Rules	Species	No. 1	No. 2
NELMA-01			
	Northern Pine		X
	Eastern Hemlock-Tamarack		X
SPIB-1001			
	Southern Pine	X	
WCLIB Std 17			
	Douglas Fir-Larch		X
	Hem-Fir		X
WWPA-01			
	Douglas Fir-Larch		X
	Hem-Fir		X
	Douglas Fir-South		X

-- End of Section --

SECTION 06200

FINISH CARPENTRY

PART 1 GENERAL

1.1 REFERENCES

The publications listed below form a part of this specification to the extent referenced. The publications are referred to in the text by basic designation only.

AMERICAN SOCIETY FOR TESTING AND MATERIALS (ASTM)

ASTM D 2898	(1994) Accelerated Weathering of Fire-Retardant-Treated Wood for Fire Testing
ASTM F 547	(1977; R 1990) Definitions of Terms Relating to Nails for Use with Wood and Wood-Base Materials

AMERICAN WOOD-PRESERVERS' ASSOCIATION (AWPA)

AWPA C9	(1995) Plywood - Preservative Treatment by Pressure Processes
AWPA C20	(1993) Structural Lumber Fire-Retardant Pressure Treatment
AWPA C27	(1993) Plywood - Fire-Retardant Pressure Treatment
AWPA M4	(1995) Standard for the Care of Preservative-Treated Wood Products
AWPA P5	(1996) Standards for Waterborne Preservatives

CALIFORNIA REDWOOD ASSOCIATION (CRA)

CRA-01	(1995) Standard Specifications for Grades of California Redwood Lumber

NORTHEASTERN LUMBER MANUFACTURERS ASSOCIATION (NELMA)

NELMA-01	(1993) Standard Grading Rules for Northeastern Lumber

SOUTHERN CYPRESS MANUFACTURER'S ASSOCIATION (SCMA)

SCMA-01	(1986; Supple No. 1, Aug 1993) Standard Specifications for Grades of Southern Cypress

SOUTHERN PINE INSPECTION BUREAU (SPIB)

SPIB-1001 (1994) Standard Grading Rules for Southern Pine Lumber

WEST COAST LUMBER INSPECTION BUREAU (WCLIB)

WCLIB Std 17 (1993; Supples III (A), V (A), & VI (A)) Grading Rules For West Coast Lumber

WESTERN WOOD PRODUCTS ASSOCIATION (WWPA)

WWPA-01 (1995; Supple Nos. 1, 2, and 3)Western Lumber Grading Rules 95

WOOD MOULDING AND MILLWORK PRODUCERS ASSOCIATION (WMMPA)

WMMPA WM 6 (1987) Industry Standard for Non-Pressure Treating of Wood Millwork

1.2 SUBMITTALS

Government approval is required for submittals with a "GA" designation; submittals having an "FIO" designation are for information only. The following shall be submitted in accordance with Section 01330 SUBMITTAL PROCEDURES:

SD-01 Data

Wood Items, Siding, and Trim; GA|AR.

Manufacturer's printed data indicating the usage of engineered or recycled wood products, and environmentally safe preservatives.

SD-04 Drawings

Finish Carpentry; GA|ED.

Drawings showing fabricated items and special mill and woodwork items. Drawings shall indicate materials and details of construction, methods of fastening, erection, and installation.

SD-14 Samples

Moldings; GA|ED. Fascias and Trim; FIO;AR.

Samples shall be of sufficient size to show patterns, color ranges, and types, as applicable, of the material proposed to be used.

Wall Cap and Wall Base; GA|ED

1.3 DELIVERY AND STORAGE

Materials shall be delivered to the site in undamaged condition, stored off ground in fully covered, well-ventilated areas, and protected from extreme changes in temperature and humidity.

PART 2 PRODUCTS

2.1 WOOD ITEMS AND TRIM

Where visual appearance is not compromised, the Contractor shall furnish products which reduce the amount of wood used by utilizing engineered wood, or recycled wood products, and preservatives without arsenic or chromium.

2.1.1 Grading and Marking

Materials shall bear the grademark, stamp or other identifying marks indicating grades of material and rules or standards under which produced. Such identifying marks on a material shall be in accordance with the rule or standard under which the material is produced, including requirements for qualifications and authority of the inspection organization, usage of authorized identification, and information included in the identification. The inspection agency for lumber shall be certified by the Board of Review, American Lumber Standards Committee, to grade the species used. Except for plywood, structural-use panels, and lumber, bundle marking will be permitted in lieu of marking each individual piece. Surfaces that are to be architecturally exposed to view shall not bear grademarks, stamps, or other types of identifying marks.

2.1.2 Sizes and Patterns

Lumber sizes and patterns shall conform to rules or standards under which produced. Unless otherwise specified, lumber shall be surfaced on four sides. Sizes and patterns for materials other than lumber shall conform to requirements of the rules or standards under which produced. Size references, unless otherwise specified, are nominal sizes, and actual sizes shall be within manufacturing tolerances allowed by the standard under which the product is produced.

2.1.3 Moisture Content

The maximum moisture content of untreated trim and wood siding shall be 15 percent at the time of delivery to the jobsite and when installed. Moisture content of all other material shall be in accordance with the standard under which the product is produced.

2.1.4 Preservative Treatment

2.1.4.1 Plywood

Plywood shall be treated in accordance with AWPA C9 with waterborne preservatives listed in AWPA P5 to a retention level as follows:

a. 4 kg per cubic meter (0.25 pcf) intended for above ground use.

b. 6.4 kg per cubic meter (0.4 pcf) intended for ground contact and fresh water use.

2.1.4.2 Exterior Wood Molding and Millwork

Exterior wood molding and millwork within 455 mm of soil, in contact with water or concrete shall be preservative-treated in accordance with WMMPA WM 6. Exposed areas of treated wood that are cut or drilled after treatment shall receive a field treatment in accordance with AWPA M4. Items of all-heart material of cedar, cypress, or redwood will not require preservative treatment, except when in direct contact with soil.

2.1.5 Fire-Retardant Treatment

Fire-retardant treated lumber shall be pressure treated in accordance with AWPA C20. Fire-retardant treated plywood shall be pressure treated in accordance with AWPA C27. Material use shall be defined in AWPA C20 and AWPA C27 for Interior Type and Exterior Type. Treatment and performance inspection shall be by a qualified independent testing agency that establishes performance ratings. Each piece or bundle of treated material shall bear identification of the testing agency to indicate performance with such rating. Treated materials to be exposed to rain wetting shall be subjected to an accelerated weathering technique in accordance with ASTM D 2898, Method A, prior to being tested for compliance with AWPA C20 or AWPA C27.

2.1.6 Moldings

Moldings shall be of the pattern indicated and shall be of a grade compatible with the finish specified.

2.1.7 Woodwork Items

2.1.7.1 Wall Cap and Wall Base

Wall cap shall be formed from solid lumber as detailed on the drawings. Wood species and finish shall closely match that of oak face veneers furnished for wood doors described in Section 08210 WOOD DOORS, and shall be as submitted and approved from samples representing a full range of available grains, stain finishes, and degrees of gloss. Samples of actual wood with finishes are required. Printed color charts are not acceptable for submittals.

2.2 NAILS

Nails shall be the size and type best suited for the purpose and shall conform to ASTM F 547. Nails shall be hot-dip galvanized or aluminum when used on exterior work. For siding, length of nails shall be sufficient to extend 40 mm into supports, including wood sheathing over framing. Screws for use where nailing is impractical shall be size best suited for purpose.

PART 3 EXECUTION

3.1 MOLDING AND INTERIOR TRIM

Molding and interior trim shall be installed straight, plumb, level and with closely fitted joints. Exposed surfaces shall be machine sanded at the mill. Molded work shall be coped at returns and interior angles and mitered at external corners. Intersections of flatwork shall be shouldered to ease any inherent changes in plane. Blind nailing shall be used to the extent practicable, and face nailing shall be set and stopped with a nonstaining putty to match the finish applied. Screws shall be used for attachment to metal; setting and stopping of screws shall be of the same quality as required where nails are used.

3.2 WOODWORK ITEMS

3.2.1 General

Items shall be installed in accordance with approved details and the manufacturer's recommendations, anchored to supporting construction, plumb and level, true to plane, with close-fitting joints..

TABLE I. SPECIES AND GRADE TABLES

Grading Rules	Species	Choice	Clear	C Select	C & Better
NELMA-01	Eastern Cedar			X	
	Eastern Hemlock		X		
	Tamarack				X
	Eastern W. Pine				X
	Northern Pine				X
	Eastern Spruce			X	
	Balsam Fir		X		
CRA-01	Redwood		X		
SCMA-01	Cypress			X	
SPIB-1001	Southern Pine				X
WCLIB Std 17	Douglas Fir				X
	Larch				X
	Hemlock Fir				X
	Mountain Hemlock				X
	Sitka Spruce				X
WWPA-01	Douglas Fir			X	
	Larch				X
	Hemlock Fir		X		
	Mountain Hemlock				X
	Western Larch		X		
	Idaho White Pine	X			
	Lodgepole Pine		X		
	Ponderosa Pine		X		
	Sugar Pine		X		
	Englemann Spruce		X		
	Douglas Fir South		X		
	Subalpine Fir		X		

NOTE 1: Western Cedar under WCLIB Std 17 shall be Grade B; and under WWPA-01, Western Cedar shall be Grade B bevel for siding and Grade A for trim.

NOTE 2: Except as specified in NOTE 3 below, siding and exterior trim shall be any of the species listed above. Interior trim shall be any one of the species listed above and the highest grade of the species for stain or natural finish and one grade below highest grade of species for paint finish.

NOTE 3: Southern Yellow Pine, Douglas Fir, Larch, Western Larch, and Tamarack shall not be used where painting is required and may be used on exterior work only when approved and stained with a preservative type stain.

-- End of Section --

SECTION 06400

ARCHITECTURAL WOODWORK

PART 1 GENERAL

1.1 SUBMITTALS

Government approval is required for submittals with a "GA" designation; submittals having an "FIO" designation are for information only. The following shall be submitted in accordance with Section 01330 SUBMITTAL PROCEDURES:

SD-01 Data

Plastic Laminate, Oak Edge Banding, Wall Trim, Fabric, Hardware; GA|ED.

SD-04 Drawings

Guard Desk; GA|ED.

SD-14 Samples

Plastic Laminate; GA|ED

Oak Edge Banding; GA|ED

Fabric; GA|ED

Guard Desk Hardware; GA|ED.

Submit two of each the following samples.

a. Solid wood, plywood or plywood with plastic laminate finish, 12 inches square, for each finish system and color.

b. Exposed cabinet hardware. Each type and finish.

c. Edge Banding: 12 inches of each type for color selection.

1.2 QUALITY CONTROL

1.2.1 AWI Quality Marking

Mark each assembled unit of architectural woodwork with manufacturer's identification and grade mark evidencing compliance with indicated AWI quality grade. Locate grade mark on surfaces which will not be exposed after installation. For other items requiring field assembly, a certification of compliance may be substituted for marking of individual pieces.

1.2.2 Fire-Retardant Marking

a. Mark each unit of fire retardant treated wood and plywood with producer's label and UL label showing grade and rating. Mark on

surface which will not be exposed after installation.

b. Arrange for architectural woodwork with sequence matched wood veneers to be produced by a single firm.

1.3 PRODUCT DELIVERY, STORAGE AND HANDLING

a. Protect woodwork during transit, delivery, storage and handling to prevent damage, soiling and deterioration.

b. Do not deliver woodwork, until painting, wet work, grinding and similar operations which could damage, soil or deteriorate woodwork have been completed in installation areas. If, due to unforeseen circumstances, woodwork must be stored in other than installation areas, store only in areas meeting requirements specified for installation areas.

1.4 JOB CONDITIONS

1.4.1 Conditioning

a. Installer shall advise Contractor of temperature and humidity requirements for woodwork installation areas. Do not install woodwork until required temperature and relative humidity have been stabilized and will be maintained in installation areas.

b. Maintain temperature and humidity in installation area as required to maintain moisture content of installed woodwork within a 1. 0 percent tolerance of optimum moisture content, from date of installation through remainder of construction period. The fabricator of woodwork shall determine optimum moisture content and required temperature and humidity conditions.

PART 2 PRODUCTS

2.1 BASIC MATERIALS AND FABRICATION METHODS

2.1.1 General

Except as otherwise indicated, comply with following requirements for architectural woodwork not specifically indicated as prefabricated or prefinished standard products.

2.1.2 Wood Moisture Content

Provide kiln-dried (KD) lumber with an average moisture content range of 9 percent to 13 percent for exterior work and 6 percent to 11 percent for interior work. Maintain temperature and relative humidity during fabrication, storage and finishing operations.

2.1.3 Quality Standards

For following types of architectural woodwork; comply with indicated standards as applicable:

2.1.3.1 Guard Desk

AWI Section 400; premium.

2.1.4 Design and Construction Features

Comply with details shown for thickness, profile and construction of architectural woodwork; and, where not otherwise shown, comply with applicable Quality Standards, with alternate details as fabricator's option.

2.2 ARCHITECTURAL WOODWORK

2.2.1 Guard Desk

Guard Desk shall be wood shop-manufactured, shop-finished of the type, design, and configuration indicated. Reception Desk shall be constructed as specified and shall meet or exceed requirements of ANSI A161.1. Evidence of conformance to ANSI A161.1 shall be provided when requested. Entire guard desk shall be premium grade as described by AWI Quality Standards, Section 400. Bulkhead shelf shall be supported by 19 mm plywood with pressure laminate all exposed sides. Front edge of the support shall be trimmed in oak and stained to match wood doors. Supports shall be spaced not greater than 1000 mm o.c.

2.2.2 Plastic Laminate Finishes

a. Grade: AWI Premium.

b. Construction: Flush overlay.

c. Exposed Surfaces: Provide high pressure laminate in NEMA Class I grades indicated for the following types of surfaces: Guard desk. Colors shall be as indicated.

2.2.2.1 Adhesive

Plastic laminate adhesive shall conform to requirements of FS MMM-A-130, Type I.

2.2.3 Guard Desk Drawer Construction

Fronts shall be 20 mm inch thick premium grade plywood, overlaid with indicated color plastic laminate on interior. Exterior faces shall be covered with high-pressure plastic laminate (color as indicated). Edges shall be trimmed with 3 mm thick PVC edge banding in color as selected. Banding shall be machine applied with hot-melt adhesive and trimmed to a radius corner of 5 mm. Drawer sides shall be 15 mm MDO plywood. All exposed sides shall be overlaid with indicated plastic laminate, with top edge finished with hardwood banding. The drawer bottoms shall be prefinished color hardboard, 10 mm thick, with a smooth uniform face. All joints shall be glued and screwed. No staples shall be used. The drawer back and subfront shall be 20 mm plywood, overlaid with indicated color polyester laminate. Drawer shell shall be attached to exposed front by means of screws into back of front.

2.2.4 Joinery and Fastening of Guard Desk Body Members

a. Fixed Guard Desk Body Members (shelves, bottoms, tops, and rails which are fastened to sides, ends and dividers) shall be joined using concealed dado, screws or interlocking mechanical fasteners. Where the concealed dado method is employed, cases shall be assembled utilizing glue and pressure. The dado method must be reinforced with blind nailing or screws. Stapling components

together will not be allowed.

b. No nails, screws, or other fastenings shall be visible on exposed surfaces. On semi-exposed surfaces, mechanical fasteners may be visible.

c. Rails or top panels must be provided where case will have a separate top, in order to permit concealed fastening of the top through such rails.

2.2.5 Plastic Laminate Surface Material Countertops

2.2.5.1 General

Except as otherwise indicated, provide separate plastic laminate countertops installed on reception desk or other support system as indicated on the drawings to comply with requirements for reception desk for plastic laminate finish.

2.2.5.2 Grade

Grade shall be as indicated.

2.2.5.3 PVC Edge Banding

Edges shall be trimmed with 3 mm PVC edge banding, machine applied with hot-melt adhesive. Except as otherwise indicated, apply to all reception desk ends, doors, drawer fronts, and fixed face panels, in color as indicated.

2.3 FINISH FOR ARCHITECTURAL WOODWORK

2.3.1 General

Prefinish architectural woodwork (AWI Finish System No. 3) to the greatest extent possible. Field finishing (equal to AWI Finish System No. 3) is acceptable for items that will receive field installed wood plugs.

2.3.2 Shop Finishing

Finish architectural woodwork at shop or factory. Defer only final touch-up, cleaning and polishing for time after delivery and installation.

2.3.3 Preparations for Finishing

Comply with AWI Quality Standards for sanding, filling countersunk fasteners, back priming and similar preparations for finishing of architectural woodwork, as applicable to each unit of work.

2.3.4 Finish

2.3.4.1 Stain Color

Same as oak door finish. Refer to contract drawings.

2.3.4.2 General Finish Standard

AWI Finish System No. 3, Premium Grade, closed grain.

2.3.4.3 Shop Application

Stain and sealer (match approved sample for color).

2.3.4.4 Final Finish

Sanding, staining, followed by 2 coats of clear polyurethane, rubbed to medium sheen.

2.4 GUARD DESK HARDWARE AND ACCESSORY MATERIALS

2.4.1 General

Provide GUARD desk hardware and accessory materials associated with architectural woodwork.

2.4.2 Hardware Standards

Except as otherwise indicated, comply with ANSI/BHMA A156.9 and ANSI/BHMA A156.18.

2.4.3 Quality Level

Type 2 (institutional), unless otherwise indicated.

2.4.4 Reception Desk Hardware

2.4.4.1 Hinges

Concealed, 3 dimensional adjustable type, stainless steel, overlay 105 degree opening.

2.4.4.2 Pulls for Doors and Drawers

Surface mounted, 23 mm, bright brass wire pulls, nominal 150 mm width, center to center with 50 mm nominal projections.

2.4.4.3 Catches

Mechanically latching type.

2.4.5 Drawer Slides

Provide slides of types indicated, to accommodate each drawer size and style.

Equip each drawer with side-mounted, full extension, ball bearing, nylon roller drawer slides with load capacity of 40.2 kg per pair. File and paper storage drawers slides shall be rated for 45.3 kg per pair.

2.4.6 Locks and Keys

Provide standard, ANSI Grade 1, 5 pin tumbler locks with keys, keyed individually and master keyed by department. Provide at all drawers and doors.

2.4.7 Shelf Supports

Where shelving is indicated as "adjustable," provide slotted type standards and brackets of type needed to support shelves with uniform 40 lb per sq ft loading. Standards shall be recessed in vertical surfaces. Finish of standards and shelf supports shall match exposed hardware.

2.4.8 Closet Bars

Telescoping brass tubing, with forged end brackets; size and wall thickness as required to support full continuous hanging of clothing.

2.4.9 Exposed Hardware Finish

Except where not available, provide exposed hardware with satin chromium plate finish (BHMA 626); where not available, provide either satin aluminum (BHMA 627); or satin stainless steel finish (BHMA 630) as defined in ANSI/BHMA A156.18.

2.4.10 Accessories

2.4.10.1 Adjustable Height Glides:

Provide adjustable glide consisting of screw foot and recessed nut.

a. Material: Dull chrome zinc metal.

b. Foot Insert: Plastic (white).

2.4.10.2 Desk Grommets

Molded Plastic Inserts: Provide black molded plastic grommets designed for desk top complete with caps where shown on drawings.

PART 3 EXECUTION

3.1 PREPARATION

a. Condition woodwork to average prevailing humidity conditions in installation areas prior to installing.

b. Deliver concrete inserts and similar anchoring devices to be built into substrates, well in advance of time substrates are to be built.

c. Prior to installation of architectural woodwork, examine shop fabricated work for completion, and complete work as required, including back priming and removal of packing.

3.2 PREINSTALLATION MEETING

a. Meet at Project Site prior to delivery of architectural woodwork and review coordination and environmental controls required for proper installation and ambient conditioning in areas to receive work.

b. Include in meeting the Contractor; Contracting Officer, and Using Agency Representatives; installers of architectural woodwork, wet work, painting, mechanical work and electrical work; and firms or persons responsible for continued operation (whether temporary or permanent) of HVAC systems as required to maintain temperature and

humidity conditions.

c. Proceed with woodwork installation only when everyone concerned agrees that required ambient conditions can be properly maintained.

d. Components and/or materials shall not be delivered to the site until after approved detail drawings have been received by the Contractor.

3.3 INSTALLATION

a. Install the work plumb, level, true and straight with no distortions. Shim as required using concealed shims. Install to a tolerance of 5 mm in 2.4m for plumb and level (including countertops); and with 3 mm maximum offset in flush adjoining surface, 5 mm maximum offsets in revealed adjoining surfaces.

b. Scribe and cut work to fit adjoining work, and refinish cut surfaces or repair damaged finish at cuts.

c. Anchor woodwork to anchors or blocking built-in or directly attached to substrates. Secure to grounds, stripping and blocking with countersunk, concealed fasteners and blind nailing as required for a complete installation. Except where prefinished matching fasteners heads are required, use fine finishing nails for exposed nailing, countersunk and filled flush with woodwork, and matching final finish where transparent finish is indicated.

d. Guard Desk: Install without distortion so that doors and drawers will fit openings properly and be accurately aligned. Adjust hardware to center doors and drawers in openings and to provide unencumbered operation. Complete the installation of hardware and accessory items as indicated.

3.4 ADJUSTMENT, CLEANING FINISHING AND PROTECTION

a. Repair damaged and defective woodwork wherever possible to eliminate defects functionally and visually; where not possible to repair properly, replace woodwork. Adjust joinery for uniform appearance.

b. Clean hardware, lubricate and make final adjustments for proper operation.

c. Clean woodwork on exposed and semi-exposed surfaces. Touch up shop applied finishes to restore damaged or soiled areas.

d. Complete the finishing work specified as work of this Section, to whatever extent not completed at shop or prior to installation of woodwork.

e. Protection: Installer of architectural woodwork shall advise Contractor of procedures required to protect architectural woodwork during remainder of construction period to ensure that work will be without damage or deterioration at time of acceptance.

f. Cover completed work with 4-mil polyethylene film protective enclosure, applied in a manner which will allow easy removal and without damage to woodwork or adjoining work. Remove cover

immediately before time of final acceptance.

-- End of Section --

SECTION 06650

SOLID POLYMER FABRICATION

PART 1 GENERAL

1.1 REFERENCES

AMERICAN NATIONAL STANDARDS INSTITUTE (ANSI)

ANSI Z 124	(1980) Plumbing

AMERICAN SOCIETY FOR TESTING AND MATERIALS (ASTM)

ASTM D 256	(1990b) Test Methods for Impact Resistance of Plastics and Electrical Insulating Materials
ASTM D 570	(1981) Test Method for Water Absorption of Plastics
ASTM D 638	(1990) Test Method for Tensile Properties of Plastics
ASTM D 696	(1979) Test Method for Coefficient of Linear Thermal Expansion of Plastics
ASTM D 790	(1990) Test Methods for Flexural Properties of Unreinforced and Reinforced Plastics and Electrical Insulating Materials
ASTM D 1499	(1984) Recommended Practice for Operating Light-and-Water Exposure Apparatus (Carbon-Arc Type) for Exposure of Plastics
ASTM D 2583	(1987) Test Method for Indentation Hardness of Rigid Plastics by Means of a Barcol Impressor
ASTM E 84	(1991a) Test Method for Surface Burning Characteristics of Building Materials
ASTM G 21	(1990) Practice of Determining Resistance of Synthetic Polymeric Materials to Fungi

1.2 SUBMITTALS

Government approval is required for submittals with a "GA" designation; submittals having an "FIO" designation are for information only. The following shall be submitted in accordance with Section 01330 SUBMITTAL PROCEDURES:

SD-01 Data

Solid Polymer Fabrication and Accessories; GA|ED.

Manufacturer's technical product description, fabrication information and compliance with specified performance requirements.

SD-04 Drawings

Solid Polymer Fabrication; GA|ED.

Detailed drawings to scale indicating verified dimensions, component sizes, fabrication details, attachment provisions and coordination requirements with adjacent work.

SD-14 Samples

Solid Polymer Fabrication; GA|ED.

Samples minimum 305 mm x 305 mm including full range of color and pattern variation. Approved samples will be retained as a standard for work.

SD-19 Operations and Maintenance Manuals

Solid Polymer Fabrication and Accessories; FIO;AR

Provide six complete copies of manufacturer's care and maintenance data, including maintenance kit, repair and cleaning instructions.

1.3 DELIVERY AND STORAGE

Deliver no components to project site until areas are ready for installation. Handle and store materials to prevent damage to finished surfaces. Provide protective coverings to prevent physical damage or staining following installation for duration of project. Damaged materials shall be removed from the site and replaced with undamaged materials at no cost to the Government.

1.4 QUALITY ASSURANCE

1.4.1 Fabricator Qualifications:

All work of this section shall be fabricated and installed by a fabrication professional skilled in the knowledge and ability required to provide work in accordance with the manufacturer's fabrication and installation instructions. The fabrication professional shall have a minimum of two years of solid polymer fabrication experience and have completed a minimum of two solid polymer fabricatin projects of similar scope and size to the solid polymer fabrication and installation work of this project. The accredited fabrication professional shall have complete and undivided responsibility for the solid polymer fabrication and installation work of this project.

1.4.2 Source Quality Control

Obtain and provide materials for all solid polymer fabrications from a single manufacturer of solid polymer materials with not less than five years of succesful experience in supplying principal materials for soild polymer fabrication installations. Provide secondary and/or alternate materials only as recommended by the manufacturer of the primary solid polymer materials.

1.4.3 Allowable Tolerances

Variation in component size: Plus or minus 3 mm.
Location of Openings: Plus or minus 3 mm from location indicated.

1.4.4 Warranty

Provide manufacturer's standard warranty.

1.5 MANUFACTURERS

Using manufacturer's proprietary names to designate materials or colors is not intended to imply that products of named manufacturers are required to be used to the exclusion of equivalent products of other manufacturers. Furnish complete manufacturer's material data and samples for proposed substitutions.

1.5.1 Requirements

Subject to the requirements, manufacturers offering products that may be incorporated into the project include, but are not limited to the following: Dupont (Corian), Nevamar (Fountainhead), and Formica (Surell).

PART 2 PRODUCTS

2.1 GENERAL:

Manufacturer's names, model numbers and finishes listed are for identification purposes only; the listing is not intended to limit selection of products of equal quality, appearance, function and specification from those of other manufacturers.

2.2 MATERIALS

Materials shall be cast, filled, non-porous homogeneous blend of polyester/acrylic alloys; not coated, laminated or of composite construction and of the thickness indicated on the drawings; meeting ANSI Z 124. Superficial damage to a depth of shall be repairable by sanding or polishing.

2.2.1 Colors

Colors and patterns shall be as shown in the color schedule, selected from manufacturers' standards.

2.3 PERFORMANCE CHARACTERISTICS

PROPERTY	REQUIREMENT (min. or max.)	TEST PROCEDURE
Tensile Strength	3100-6000 psi min.	ASTM D 638
Tensile Modulus	.93-2.2 x 10_6 psi min.	ASTM D 638
Flexural Strength	7000 psi min.	ASTM D 790
Flexural Modulus	1.0 x 10_6 psi min.	ASTM D 790
Elongation	0.3% min.	ASTM D 638

Hardness	90 Rockwell "M" scale min.	ASTM D 758
	52-Barcol Impressor min.	ASTM D 2583
Thermal Expansion	$3.5 \times 10_{-6}$ in/in/deg. C. max.	ASTM D 696
	$1.95 \times 10_{-6}$ in/in/deg. F. max.	
Color Stability	No change 100 hours min.	NEMA LD3-3.10
Wear and Cleanability	Passes	ANSI Z 124.3
Abrasion Resistance	No loss of pattern max. weight loss (1,000 cycles)=0.9g	NEMA LD3-3.10 ANSI Z 124.3
Boiling Water Surface Resistance	No change	NEMA LD3-3.05
High Temperature	No Change	NEMA LD3-3.06
Impact Resistance		
Notched Izod	24-0.28 ft.-lbs. min.	ASTM D 256 Method A
Gardner	9.0 ft-lbs. min.	ASTM D 3029
Ball Drop		NEMA LD3-303
1/4" sheet	36" min., 1/2 lb. ball, no failure	
1/2" sheet	140" min., 1/2 lb. ball, no failure	
3/4" sheet	200" min., 1/2 lb. ball, no failure	
Bowls (point impact)	No cracks or chips	ANSI Z 124.3 and Z 124.6
Stain Resistance	Passes	ANSI Z 124.3
Weatherability	No change, min. 1,000 hours	ASTM D 1499
Fungi and Bacteria	No Attack	ASTM G 21
Specific Gravity	1.6 min.	
Water Absorption	24 hrs Long-Term	ASTM D 570
Weight (% max.)	0.05 0.05 (1/4")	
	0.10 0.90 (3/4")	
Flammability		ASTM E 84

Solid colors	1/4"	1/2"	3/4"
Flamespread	25 max.	25 max.	25 max.
Smoke Developed	30 max.	30 max.	30 max.
Class	1	1	ASTM E 84
Particulate patterns	1/4"	1/2"	3/4"
Flamespread	25 max.	25 max.	25 max.
Smoke Developed	30 max.	30 max.	30 max.
Class	1	1	ASTM E 84
Pittsburgh Protocol	solids-80 grams minimum		"LC50" Test
Toxicity (as used by NY State)	rating particulate patterns-65gms minimum		

2.4 JOINT ADHESIVE

Joint adhesive shall consist of the manufacturer's standard two-part adhesive kit to create inconspicuous, non-porous joints.

2.5 SEALANT

Sealant shall be mildew-resistant, FDA and UL listed silicone sealant in colors matching components.

2.6 FABRICATION

Components shall be factory fabricated to the greatest extent pratical to sizes and shapes indicated, in accordance with approved Shop Drawings. Joints shall be formed between components using manufacturer's standard joint adhesive. Joints shall be reinforced with 2-inch wide strips of solid polymer material. Factory cutouts shall be provided for plumbing fittings and toilet accessories as indicated on the drawings. Component edges shall be cut and finished with clean returns. All exposed edges shall be eased to 3.2 mm radius. Contours and radii shall be routed to template, with edges smooth. Defective and inaccurate work shall be rejected.

2.6.1 Finishes

Finished surfaces shall receive a uniform semi-gloss finish with a gloss range of 20-50.

PART 3 EXECUTION

3.1 INSTALLATION

Install components plumb and level, scribed to adjacent finishes, in accordance with approved shop drawings and product installation data. Form field joints using manufacturer's recommended adhesive, with joints inconspicuous in finished work. Keep components and hands clean when making joints. Adhere top-mount sinks/bowls to countertops using manufacturer's recommended adhesives and color-matched silicone sealants.

Provide backsplashes and sidesplashes as indicated on the drawings. Adhere to countertops using manufacturer's standard color-matched silicone sealant. Keep components and hands clean during installation. Remove adhesives, sealants and other stains. Keep clean until Date of Substantial Completion. Replace stained components. Make plumbing connections to sinks in accordance with Section 15400 - Plumbing, General. Protect surfaces from damage until Date of Substantial Completion. Repair work or replace damaged work that cannot be repaired to Contracting Officer's satisfaction.

-- End of Section --

SECTION 07210

BUILDING INSULATION

PART 1 GENERAL

1.1 REFERENCES

The publications listed below form a part of this section to the extent referenced:

AMERICAN SOCIETY FOR TESTING AND MATERIALS (ASTM)

ASTM A 390	(1992; Rev A) Standard Specification for Zinc-Coated (Galvanized) Steel Poultry Fence Fabric (Hexagonal and Straight Line)
ASTM B 479	(1995) Standard Specification for Annealed Aluminum and Aluminum-Alloy Foil for Flexible Barrier Applications
ASTM C 1139	(1990) Standard Specification for Fibrous Glass Thermal Insulation and Sound Absorbing Blanket and Board for Military Application
ASTM C 1289	(1995) Standard Specification for Faced Rigid Cellular Polyisocyanurate Thermal Insulation Board
ASTM C 208	(1995) Standard Specification for Insulation Boards (Cellulosic Fiber) Structural and Decorative
ASTM C 553	(1992) Standard Specification for Mineral Fiber Blanket and Felt Insulation (Industrial Type)
ASTM C 578	(1995) Standard Specification for Preformed, Cellular Polystyrene Thermal Insulation
ASTM C 612	(1993) Standard Specification for Mineral Fiber Block and Board Thermal Insulation
ASTM C 665	(1994) Mineral Fiber Blanket Thermal Insulation for Light Frame Construction and Manufactured Housing
ASTM C 764	(1994) Mineral Fiber Loose-Fill Thermal Insulation
ASTM C 892	(1993) Standard Specification for High-Temperature Fiber Blanket Thermal Insulation
ASTM E 154	(1988; R 1983) Water Vapor Retarders Used

	in Contact with Earth Under Concrete Slab, on Walls, or as Ground Cover
ASTM E 84	(1995) Standard Test Method for Surface Burning Characteristics of Building Materials
ASTM E 96	(1995) Standard Test Methods for Water Vapor Transmission of Materials

FEDERAL SPECIFICATIONS (FS)

FS FF-N-105	(Rev B; Int Am 4) Nails, Brads, Staples, and Spikes: Wire, Cut, and Wrought
FS UU-B-790	(Rev A; Int Am 1) Building Paper, Vegetable Fiber: (Kraft, Waterproofed, Water Repellent and Fire Resistant)

1.2 SUBMITTALS

The following shall be submitted in accordance with Section 01330, "Submittals," in sufficient detail to show full compliance with the specification:

SD-01 Data

Glass Fiber Insulation Board; FIO;AR. Batts and Rolls; FIO;AR. Mineral-Fiber Batts; FIO;AR. Mineral-Fiber Flexible Blankets; FIO;AR. Blown-In Mineral-Fiber Insulation; FIO;AR. Rigid Polystyrene Board; FIO;AR. Rigid Polyurethane Board; FIO;AR. Vapor Barrier; FIO;AR. Vapor Barrier Tape; FIO;AR. Water-Vapor Barrier Subgrade Covers; FIO;AR. Fasteners; FIO;AR. Adhesive; FIO;AR. Nails Staples; FIO;AR. Wire Netting; FIO;AR. Vapor-Barrier Adhesive; FIO;AR. Sand; FIO;AR.

Manufacturer's Catalog Data shall be submitted for the items listed above.

SD-06 Instructions

Fasteners; FIO;AR. Pneumatic Blowing Machine; FIO;AR. Vapor-Barrier Adhesive; FIO;AR.

Manufacturer's Instructions shall be submitted for installation of the following items listed above.

SD-09 Reports

Water-Vapor Barrier Subgrade Covers; FIO;AR

Test reports shall be submitted for resistance to decay and permeance.

SD-13 Certificates

Glass Fiber Insulation Board; FIO;AR. Batts and Rolls; FIO;AR. Mineral-Fiber Batts; FIO;AR. Mineral-Fiber Flexible Blankets; FIO;AR. Blown-In Mineral-Fiber Insulation; FIO;AR. Rigid Polystyrene Board; FIO;AR. Rigid Polyurethane Board; FIO;AR. Vapor Barrier; FIO;AR. Vapor Barrier Tape; FIO;AR. Water-Vapor Barrier Subgrade Covers; FIO;AR. Staples; FIO;AR.

Wire Netting; FIO;AR. Fire-Retardant Treated Wood Furring Strips; FIO;AR.

Certificates of Compliance shall be submitted for the items listed above showing conformance with referenced standards contained in this section. Certify use of recycled material indicating percentage of recycled content and costs of the products.

SD-14 Samples

Glass-Fiberboard; GA|AR.

Contractor shall submit three samples, full thickness by 300 millimeter wide by 300 millimeter long.

Mineral-Wool Batt; GA|AR.

Contractor shall submit three samples, full size by 300 millimeter long.

Mineral-Fiber Flexible Blanket; GA|AR.

The Contractor shall submit three samples, full size by 300 millimeter long.

Vapor-Barrier; GA|AR.

The Contractor shall submit three samples, 300 millimeter.

Blown-In Mineral-Fiber Insulation; GA|AR.

The Contractor shall submit three samples, 0.01 cubic meter each.

Vapor Barrier Tape; FIO;AR. Vapor Barrier Subgrade Covers; FIO;AR. Rigid Polystyrene Board; FIO;AR. Rigid Polyurethane Board; FIO;AR. Fasteners; FIO;AR. Adhesives; FIO;AR. Wire Netting; FIO;AR.

The Contractor shall submit the above samples as stated.

1.3 DELIVERY, HANDLING, AND STORAGE

Materials shall be delivered to the project site in their original, unopened packages or containers bearing labels identifying the manufacturer's name, brand name, material, and other information.

Materials shall be stored in their original unbroken packages or containers in a weathertight and dry area, and protected from damage until ready for use.

PART 2 PRODUCTS

2.1 THERMAL-INSULATION MATERIALS

In compliance with the Resource Conservation Recovery Act, the Contractor shall be responsible for using recycled and/or recovered materials to the maximum extent possible. Recycled materials used shall be reported to the Contracting Officer. The report shall certify use of the recycled material and indicate the percentage of recycled content and the costs of the product.

2.1.1 Glass-Fiber Insulation Board

For informational purposes, a list of known sources for recycled building

insulation is provided below. Note that the Contractor is not limited to these sources. An approved product from other sources may be submitted for the Government's approval during construction.

Acceptable manufacturer's include, but are not limited to:

Certain Teed Corporation
Guardian Fiberglass, Inc.
Manville Building Products Corp.
Owens-Corning Fiberglass Corp.
Western Fiberglass, Inc.

2.1.1.1 Board

Glass-fiber insulation board shall have as a minimum the thermal resistance indicated on the drawings, of R-8, width and length as required to suit construction conditions. Insulation shall have a 0.254 millimeter thick, white, puncture-resistant woven-glass cloth with vinyl facing on one side. Insulation shall conform to ASTM C 208, ASTM C 1139 or ASTM C 612, non-load bearing for use at temperatures up to and including 205 degrees C; the composite insulation shall have a UL rating of 25/50 when tested in accordance with ASTM E 84.

Glass-fiber insulation board shall contain a minimum content of 6 percent recovered materials.

2.1.1.2 Batts and Rolls

Glass-fiber insulation batts and rolls shall be of nominal thickness, width and R value indicated. Insulation shall conform to ASTM C 665 for the following:

Type I, unfaced insulation

Type II, Kraft faced insulation

Type III, foil faced insulation having a UL rating of 25/50 when tested in accordance with ASTM E 84.

Glass-fiber insulation batts and rolls shall contain a minimum content of 6 percent recovered materials.

Blown-in fibrous-glass insulation shall conform to ASTM C 764.

2.1.2 Mineral-Fiber Batts

Mineral-fiber batts shall be of the nominal thickness indicated, width and length as required to suit construction conditions, without membrane facing unless otherwise indicated, conforming to ASTM C 665.

2.1.3 Mineral-Fiber Flexible Blankets

Mineral-fiber flexible blankets shall be the nominal thickness indicated, width and length as required to suit construction conditions, blanket form, resilient type, for use below and above ambient to 177 degrees C, conforming to ASTM C 553, ASTM C 892, ASTM C 665, and the following:

Blankets shall have a factory-applied vapor-barrier facing on one side

with 50 millimeter nailing tabs on both edges. Vapor barriers shall be fire-retardant, high-vapor transmission, and aluminum foil laminated to creped paper type, conforming to ASTM B 479.

Mineral fibers shall be the textile type.

Nominal density shall be 12.0 kilogram per cubic meter.

2.1.4 Rigid Polystyrene Board

Rigid polystyrene board shall be of thickness indicated and shall be extruded polystyrene conforming to ASTM C 578, Type IV.

2.1.5 Rigid Polyurethane Board

Rigid polyurethane board shall be of thickness indicated and shall conform to ASTM C 1289.

2.1.6 Vapor Barrier

Vapor barrier shall be fire-retardant, high-vapor transmission and aluminum-foil-laminated-to-creped-paper type, conforming to ASTM B 479.

2.1.7 Vapor-Barrier Tape

Vapor-barrier tape shall be not less than 50 millimeter wide with a fire-retardant pressure-sensitive adhesive coating on one face. Vapor-barrier material shall be fire-retardant, high-vapor transmission and aluminum-foil-laminated-to-creped-paper type, conforming to ASTM B 479.

2.1.8 Water-Vapor Barrier Subgrade Covers

Water-vapor barrier subgrade covers shall be resistant to decay when tested in accordance with ASTM E 154, shall have a water-vapor permeance after exposure in the resistance-to-decay test not exceeding 29 nanogram per pascal-second-square meter when tested in accordance with ASTM E 96, Water Method, and shall be one of the following materials:

Clear polyethylene sheeting, 0.203 millimeter thick

Polyethylene-coated barrier paper consisting of 0.051 millimeter thick polyethylene film laminated to one surface of rot-resistant, water-resistant, uncreped and reinforced barrier paper; paper shall conform to FS UU-B-790, Type I, Grade A, Style 4.

Asphalt-core board, surfaced both sides with asphalt-saturated and asphalt-coated felt, weighing not less than 3 kilogram per square meter, and not less than 3 millimeter thick

2.2 FASTENING MATERIALS

2.2.1 Fasteners

Fasteners shall have a 50 by 50 millimeter perforated plate, minimum 20 millimeter wide prong, of sufficient length to bend to the bottom of the notch. Fasteners shall be cold-rolled carbon steel, zinc coated. Washers shall be 40 millimeter diameter, slotted type, zinc coated.

2.2.2 Adhesive

Adhesive shall have a bonding strength of 310 newton per clip after a 3-day drying time at 21 degrees C and shall have a temperature range of minus 29 degrees to plus 107 degrees C.

2.2.3 Nails

Nails shall be zinc-coated steel, common style, of the size required to suit the application, conforming to FS FF-N-105, Type II, Style 10.

2.2.4 Staples

Staples shall be galvanized steel, flat top crown, of the size required to suit the application, conforming to FS FF-N-105, Type II, Style 3.

2.2.5 Wire Netting

Wire netting shall be hexagonal zinc-coated steel poultry netting having a 40 millimeter mesh size and 1.2 millimeter diameter wire, conforming to ASTM A 390.

2.2.6 Vapor-Barrier Adhesive

Vapor-barrier adhesive shall be fire resistant, suitable for bonding laps in the vapor-barrier material, and as recommended by the manufacturer of each type of vapor-barrier material used in the work.

2.2.7 Sand

Sand for ballast over water-vapor barrier subgrade covers in crawlspaces shall be natural sand.

PART 3 EXECUTION

3.1 GENERAL

Building insulation shall be installed in accordance with approved descriptive data and as specified.

Insulation material shall be cut and fit as necessary to fully insulate small areas between closely spaced framing members and to accommodate piping, conduit, outlet boxes, and other construction penetrating the insulation material.

Vapor barriers, both those affixed to the principal face of the insulation material and those separately attached, shall be installed to provide a continuous vapor-barrier seal. Tears, breaks, or ruptures that might interfere with the effectiveness of the vapor barrier shall be prevented.

3.2 CONDITIONS AT BUILDING

Insulation shall be installed only after building construction has progressed to the point that inclement weather will not damage or wet the insulation material.

Electrical wiring, plumbing, and other concealed work shall be completed and approved prior to the start of building insulation work.

3.3 PREPARATION OF SURFACES

Surfaces on which thermal-insulation materials are to be applied shall be clean, smooth, dry, and free from projections that might puncture the vapor barriers. Condition of surfaces shall be inspected and approved prior to the start of building insulation work.

Construction shall be supplemented with nailers, furring strips, or other supporting members to support the insulation in its proper location.

3.4 PERIMETER INSULATION SYSTEM

Perimeter insulation applied to foundation walls shall be installed before the start of drainage-fill placing operations. Cellular plastic boards shall be applied to the interior side of outside foundation walls where indicated and shall extend the indicated dimension from the top of the foundation wall. Cellular plastic boards shall be secured to the foundation wall surface by means of spot-applied bonding adhesive for cellular plastic boards; the bonding adhesive shall be applied in accordance with the adhesive manufacturer's printed directions. Cellular plastic boards shall be applied in a horizontal position with ends and sides closely butted together and with vertical joints broken.

Perimeter insulation applied on horizontal surfaces shall be installed after the completion of drainage fill-placing operations. Cellular plastic boards shall be applied horizontally under concrete slabs on the ground where indicated and shall extend the indicated dimension in from the exterior wall. Cellular plastic boards shall be installed with ends and sides closely butted together and the surface leveled to finish flush with the drainage-fill surface. Cellular plastic boards shall be protected by covering horizontal surfaces with water-vapor barrier subgrade covers. Subgrade cover sheets shall be laid with not less than 150 millimeter laps at edges and ends. Lapped joints shall be sealed with adhesive.

3.5 WALL AND CEILING INSULATION SYSTEM

Glass-fiber insulation batts and rolls shall be placed as indicated between wall and ceiling framing members, fitting snugly against framing members. Insulation shall be cut to required length for each space to be insulated.

Mineral-wool batts shall be placed as indicated between the wall and ceiling framing members with batts fitting snugly against framing members. Batts shall be cut to the required length for each space to be insulated, allowing sufficient length for attachment at top and bottom when installed between wall framing members and for snugly butting together when installed between ceiling framing members. When plumbing stacks or vents occur in outside wall construction, insulation shall be applied between the winter-cold side of the wall and the pipe.

Batts having membrane facing or enveloping membranes shall be installed with the affixed flanged membrane facing toward the winter-heated side of the construction. Additional end flanges shall be formed of the vapor-barrier membrane facing at the ends of batts by cutting or pushing away the insulation material, leaving the facing for attachment to the framing. Flanges shall be nailed or stapled to framing members not more than 150 millimeter on center. Joints at perimeter of cutouts, end joints between batts in ceiling construction, and tears or ruptures in the membrane facing shall be sealed with vapor-barrier tape.

Batts without membrane facing shall be secured in place between framing

members by means of wood nailing strips or an approved adhesive, standard with the insulation materials manufacturer.

Vapor barriers shall be installed after mineral-wool batts have been placed and shall be applied to the winter-heated side of the construction. Vapor-barrier edges shall occur over framing members. Vapor barriers shall be secured by nails or staples. Vapor barrier shall be cut and fit to accommodate piping, conduits, outlet boxes, and other construction penetrating the vapor barrier. Joints at the perimeter of cutouts and tears or ruptures in the vapor-barrier shall be sealed with vapor-barrier tape.

3.6 FLOOR INSULATION SYSTEM

Mineral-wool batts having membrane facing or enveloping membranes shall be placed where indicated between floor-framing members with vapor-barrier membranes facing toward the winter-heated side of the construction. Batts shall be placed in a long length with batt ends butted snugly together and with both sides fitting snugly against framing members. Batts shall be secured in place by wire netting stapled to the edges of framing members.

Water-vapor subgrade covers shall be installed over the ground surface under enclosed insulated-floor construction. Ground surface shall be level and free of debris, sharp objects, standing water, and other deleterious substances before the subgrade cover is applied. Subgrade-cover sheets shall be laid over the ground surface with not less than a 150 millimeter lap at edges and ends; lapped joints shall be sealed with adhesive. Tears, breaks, or ruptures in the subgrade cover which might interfere with effectiveness of the vapor barrier shall be sealed with adhesive and not less than 50 millimeter wide strips of subgrade cover material. A layer of sand not less than 25 millimeter thick shall be applied over the subgrade cover.

3.7 WALL AND CEILING INSULATION SYSTEM: METAL STUD

Insulation shall be wired or taped to metal studs as recommended by the metal-stud manufacturer.

3.8 INSPECTION AND ACCEPTANCE PROVISIONS

3.8.1 Finished-Building Insulation Requirements

Building insulation work will be rejected for, but not limited to, any of the following deficiencies:

Thermal insulation material not conforming to the type and nominal thickness indicated for the kind of construction.

Insulated construction not having small areas between closely spaced framing members fully insulated.

Installed thermal-insulation material damaged or wetted by exposure to inclement weather.

Installed vapor barriers having tears, breaks, or ruptures that cannot be sealed with vapor-barrier tape or other approved method.

Installed blown-in insulation not conforming to the indicated installed mass, kilogram per square meter.

3.8.2 Repair of Defective Work

Defective work shall be removed and replaced, at no expense to the Government, with building insulation materials that meet the requirements of this section.

-- End of Section --

SECTION 07270

FIRESTOPPING

PART 1 GENERAL

1.1 REFERENCES

The publications listed below form a part of this specification to the extent referenced. The publications are referred to in the text by basic designation only.

AMERICAN SOCIETY FOR TESTING AND MATERIALS (ASTM)

ASTM E 84	(1995a) Surface Burning Characteristics of Building Materials
ASTM E 814	(1994b) Fire Tests of Through-Penetration Fire Stops

UNDERWRITERS LABORATORIES (UL)

UL-05	(1995; Supple) Fire Resistance Directory
UL 723	(1993; Rev Apr 1994) Test for Surface Burning Characteristics of Building Materials
UL 1479	(1994) Fire Tests of Through-Penetration Firestops

1.2 SUBMITTALS

Government approval is required for submittals with a "GA" designation; submittals having an "FIO" designation are for information only. The following shall be submitted in accordance with Section 01330 SUBMITTAL PROCEDURES:

SD-04 Drawings

Firestopping Materials; FIO;AR.

Detail drawings including manufacturer's descriptive data, typical details, installation instructions and the fire-test data and/or report as appropriate for the fire resistance rated construction and location. Submittal shall indicate the firestopping material to be provided for each type of application. When more than 5 penetrations are to receive firestopping, drawings shall indicate location and type of application.

SD-13 Certificates

Firestopping Materials; FIO;AR.

Certificates attesting that firestopping material complies with the specified requirements. The label or listing of the Underwriters Laboratories will be acceptable evidence. In lieu of the label or listing,

a written certificate may be submitted from an approved, nationally recognized testing agency equipped to perform such services, stating that the items have been tested and conform to the specified requirements and testing methods.

Installer Qualifications; FIO;AR.

Certification stating that installer is qualified and trained to install the specified firestopping material.

Inspection; FIO;AR.

Manufacturer's representative certification stating that firestopping work has been inspected and found to be applied according to the manufacturer's recommendations and the specified requirements.

1.3 GENERAL REQUIREMENTS

Firestopping shall consist of furnishing and installing a material or a combination of materials to form an effective barrier against the spread of flame, smoke and gases, and maintain the integrity of fire resistance rated walls, partitions, floors, and ceiling-floor assemblies, including through-penetrations and construction joints. Through-penetrations include the annular space around pipes, tubes, conduit, wires, cables and vents. Construction joints include those used to accommodate expansion, contraction, wind, or seismic movement; firestopping material shall not interfere with the required movement of the joint.

1.4 STORAGE AND DELIVERY

Materials shall be delivered in the original unopened packages or containers showing name of the manufacturer and the brand name. Materials shall be stored off the ground and shall be protected from damage and exposure to elements. Damaged or deteriorated materials shall be removed from the site.

1.5 INSTALLER QUALIFICATIONS

Installer of firestopping material shall be trained by the manufacturer or the manufacturer's representative, and shall have a minimum of 3 years experience in the installation of firestopping of the type specified.

PART 2 PRODUCTS

2.1 FIRESTOPPING MATERIALS

Firestopping materials shall consist of commercially manufactured products complying with the following minimum requirements:

2.1.1 Fire Hazard Classification

Material shall have a flame spread of 25 or less, and a smoke developed rating of 50 or less, when tested in accordance with ASTM E 84 or UL 723. Material shall be an approved firestopping material as listed in UL-05.

2.1.2 Toxicity

Material shall be nontoxic to humans at all stages of application.

2.1.3 Fire Resistance Rating

Firestopping will not be required to have a greater fire resistance rating than that of the assembly in which it is being placed.

2.1.3.1 Through-Penetrations

Firestopping materials for through-penetrations, as described in paragraph GENERAL REQUIREMENTS, shall provide "F" and "T" fire resistance ratings in accordance with ASTM E 814 or UL 1479, except that T Ratings are not required for penetrations smaller than or equal to a 100 mm nominal pipe or 0.01 square meter in overall cross sectional area. Fire resistance ratings shall be the same as those of the construction elements in which penetrations occur, unless otherwise indicated.

2.1.3.2 Construction Joints and Gaps

Fire resistance ratings of construction joints, as described in paragraph GENERAL REQUIREMENTS, and gaps such as those between floor slabs or roof decks and curtain walls shall be the same as the construction in which they occur.

PART 3 EXECUTION

3.1 PREPARATION

Areas to receive firestopping shall be free of dirt, grease, oil, or loose materials which may affect the fitting or fire resistance of the firestopping system.

3.2 INSTALLATION

Firestopping material shall completely fill void spaces regardless of geometric configuration, subject to tolerance established by the manufacturer. Firestopping for filling floor voids 100 mm or more in any direction shall be capable of supporting the same load as the floor is designed to support or shall be protected by a permanent barrier to prevent loading or traffic in the firestopped area. Firestopping shall be installed in accordance with manufacturer's written instructions. Firestopping shall be provided in the following locations, except in floor slabs on grade:

a. Penetrations of duct, conduit, tubing, cable and pipe through floors and through fire-resistance rated walls, partitions, and ceiling-floor assemblies.

b. Penetrations of vertical shafts such as pipe chases, elevator shafts, and utility chutes.

c. Gaps at the intersection of floor slabs and curtain walls, including inside of hollow curtain walls at the floor slab.

d. Gaps at perimeter of fire-resistance rated walls and partitions, such as between the top of the walls and the bottom of roof decks.

e. Construction joints in floors and fire rated walls and partitions.

f. Other locations where required to maintain fire resistance rating of the construction.

g. Other locations indicated.

3.3 INSPECTION

Firestopped areas shall not be covered or enclosed until inspection is complete and approved. A manufacturer's representative shall inspect the applications initially to ensure adequate preparations (clean surfaces suitable for application, etc.) and periodically during the work to assure that the completed work has been accomplished according to the manufacturer's written instructions and the specified requirements.

-- End of Section --

SECTION 07416

STRUCTURAL STANDING SEAM METAL ROOF (SSSMR) SYSTEM

PART 1 GENERAL

1.1 REFERENCES

The publications listed below form a part of this specification to the extent referenced. The publications are referred to in the text by basic designation only.

ALUMINUM ASSOCIATION (AA)

AA-02	(1994) Aluminum Design Manual: Specifications and Guidelines for Aluminum Structures

AMERICAN INSTITUTE OF STEEL CONSTRUCTION (AISC)

AISC-04	(1989) Specification for Structural Steel Buildings - Allowable Stress Design, Plastic Design

AMERICAN IRON AND STEEL INSTITUTE (AISI)

AISI-01	(1986; Addenda 1989) Cold-Formed Steel Design Manual

AMERICAN SOCIETY FOR TESTING AND MATERIALS (ASTM)

ASTM A 463	(1996a) Steel Sheet, Aluminum-Coated, by the Hot-Dip Process
ASTM A 653	(1996) Steel Sheet, Zinc-Coated (Galvanized) or Zinc-Iron Alloy-Coated (Galvannealed) by the Hot-Dip Process
ASTM A 792	(1995) Steel Sheet, 55% Aluminum-Zinc Alloy-Coated by the Hot-Dip Process
ASTM B 117	(1994) Operating Salt Spray (Fog) Testing Apparatus
ASTM B 209	(1996) Aluminum and Aluminum-Alloy Sheet and Plate
ASTM D 522	(1993a) Mandrel Bend Test of Attached Organic Coatings
ASTM D 523	(1989; R 1994) Specular Gloss
ASTM D 714	(1987; R 1994) Evaluating Degree of Blistering of Paints
ASTM D 968	(1993) Abrasion Resistance of Organic

	Coatings by Falling Abrasive
ASTM D 1308	(1987; R 1993) Effect of Household Chemicals on Clear and Pigmented Organic Finishes
ASTM D 1654	(1992) Evaluation of Painted or Coated Specimens Subjected to Corrosive Environments
ASTM D 2244	(1993) Calculation of Color Differences from Instrumentally Measured Color Coordinates
ASTM D 2247	(1994) Testing Water Resistance of Coatings in 100% Relative Humidity
ASTM D 2794	(1993) Resistance of Organic Coatings to the Effects of Rapid Deformation (Impact)
ASTM D 3359	(1995) Measuring Adhesion by Tape Test
ASTM D 4214	(1989) Evaluating the Degree of Chalking of Exterior Paint Films
ASTM E 1592	(1995) Structural Performance of Sheet Metal Roof and Siding Systems by Uniform Static Air Pressure Difference

AMERICAN SOCIETY OF CIVIL ENGINEERS (ASCE)

ASCE 7	(1995) Minimum Design Loads for Buildings and Other Structures

1.2 GENERAL REQUIREMENTS

The Contractor shall furnish a manufacturer's standard product which satisfies all requirements contained herein and has been verified by load testing and independent design analyses to meet the specified design requirements. In compliance with the Resource Conservation Recovery Act, the Contractor shall be responsible for using recycled and/or recovered materials to the maximum extent possible. Recycled materials used shall be reported to the Contracting Officer. The report shall certify use of the recycled material and indicate the percentage of recycled content and the costs of the product.

1.2.1 SSSMR System Manufacturer

The SSSMR system shall be the product of a manufacturer who has been in the practice of manufacturing SSSMR systems for a period of not less than 3 years and has been involved in at least five projects similar in size and complexity to this project.

1.2.1.1 SSSMR Structural Support System Manufacturer

The SSSMR structural support system shall be the product of a manufacturer who has been in the practice of manufacturing SSSMR structural support

systems for a period of not less than three (3) years and has been involved in at least five projects similar in size and complexity to this project.

1.2.2 Installer

The installer shall be certified by the SSSMR system manufacturer to have experience in installing at least three projects that are of comparable size, scope and complexity as this project for the particular roof system furnished. The installer may be either employed by the manufacturer or be an independent installer.

1.3 DESIGN REQUIREMENTS

The design of the SSSMR system and the structural support system shall be provided by the Contractor as a complete system. Members and connections not indicated on the drawings shall be designed by the Contractor. Roof panels, components, transitions, accessories, and assemblies shall be supplied by the same manufacturer.

1.3.1 Design Criteria

Design criteria shall be in accordance with ASCE 7 unless otherwise specified.

1.3.2 Dead Loads

The dead load shall be the weight of the SSSMR system. Collateral loads such as sprinklers, mechanical and electrical systems, and ceilings shall not be attached to the panels.

1.3.3 Live Loads

1.3.3.1 Concentrated Loads

The panels and anchor clips shall be capable of supporting a 1335 N concentrated load. The concentrated load shall be applied at the panel midspan and will be resisted by a single standing seam metal roof panel assumed to be acting as a beam. The undeformed shape of the panel shall be used to determine the section properties.

1.3.3.2 Uniform Loads

The panels and concealed anchor clips shall be capable of supporting a minimum uniform live load of 1200 Pa.

1.3.4 Roof Snow Loads

The design roof snow loads shall be as shown on the contract drawings.

1.3.5 Wind Loads

The design wind uplift pressure for the roof system shall be in accordance with ASCE 7. The design uplift force for each connection assembly shall be that pressure given for the area under consideration, multiplied by the tributary load area of the connection assembly. The safety factor listed below shall be applied to the design force and compared against the ultimate capacity. Prying shall be considered when figuring fastener design loads.

a. Single fastener in each connection.....3.0

b. Two or more fasteners in each connection...2.25

1.3.6 Thermal Loads

Roof panels shall be free to move in response to the expansion and contraction forces resulting from a total temperature range of 122 degrees C during the life of the structure.

1.3.7 Framing Members Supporting the SSSMR Sturctural SupportSystem

Any additions/revisions to framing members supporting the SSSMR structural support system to accommodate the manufacturer/fabricator's design shall be the Contractor's responsibility and shall be submitted for review and approval. New or revised framing members and their connections shall be designed in accordance with AISC-04 or AISI-01. Maximum deflection under applied live load, snow, or wind load shall not exceed 1/180 of the span length.

1.3.8 Roof Panels Design

Steel panels shall be designed in accordance with AISI-01. Aluminum panels shall be designed in accordance with AA-02. The structural section properties used in the design of the panels shall be determined using the unloaded shape of the roof panels. The calculated panel deflection from concentrated loads shall not exceed 1/180 of the span length. The calculated panel deflection under applied live load, snow, or wind load shall not exceed 1/180 times the span length. Deflections shall be based on panels being continuous across three or more supports. Deflection shall be calculated and measured along the major ribs of the panels.

1.3.9 Accessories and Their Fasteners

Accessories and their fasteners shall be capable of resisting the specified design wind uplift forces and shall allow for thermal movement of the roof panel system. Exposed fasteners shall not restrict free movement of the roof panel system resulting from thermal forces. There shall be a minimum of two fasteners per clip. Single fasteners with a minimum diameter of 9 mm will be allowed when the supporting structural members are prepunched or predrilled.

1.4 PERFORMANCE REQUIREMENTS

The SSSMR shall be tested for wind uplift resistance in accordance with ASTM E 1592; SSSMR systems previously tested and approved by the Corps of Engineers' STANDARD TEST METHOD FOR STRUCTURAL PERFORMANCE OF SSMRS BY UNIFORM STATIC AIR PRESSURE DIFFERENCE may be acceptable. Two tests shall be performed. Test 1 shall simulate the edge condition with one end having crosswise restraint and other end free of crosswise restraint. The maximum span length for the edge condition shall be 750 mm. Test 2 shall simulate the interior condition with both ends free of crosswise restraint. The maximum span length for the interior condition shall be 1.5 m . External reinforcement, such as clamps on the ribs, shall not be installed to improve uplift resistance. Bolts through seams shall not be installed.

1.5 SUBMITTALS

Government approval is required for submittals with a "GA" designation;

submittals having an "FIO" designation are for information only. The following shall be submitted in accordance with Section 01330 SUBMITTAL PROCEDURES:

SD-01 Data

Design Analysis; GA|ED.

Design analysis signed by a Registered Professional Engineer employed by the SSSMR manufacturer. The design analysis shall include a list of the design loads, and complete calculations for the structural support system, roofing system and its components; valley designs, gutter/downspout calculations, screw pullout test results, and shall indicate how expected thermal movements are accommodated.

SD-04 Drawings

Structural Standing Seam Metal Roof System; GA|ED.

Metal roofing drawings and specifications and erection drawings; shop coating and finishing specifications; and other data as necessary to clearly describe design, materials, sizes, layouts, standing seam configuration, construction details, provisions for thermal movement, line of panel fixity, fastener sizes and spacings, sealants and erection procedures. Drawings shall reflect the intent of the architectural detailing using the manufacturer's proprietary products and fabricated items as required. The SSSMR system shop drawings shall be provided by the metal roofing manufacturer.

SD-08 Statements

Qualifications; GA|AR.

Qualifications of the manufacturer and installer.

SD-09 Reports

Test Report for Uplift Resistance of the SSSMR; GA|ED.

The report shall include the following information:

a. Details of the SSSMR system showing the roof panel cross-section with dimensions and thickness.

b. Details of the anchor clip, dimensions, and thickness.

c. Type of fasteners, size, and the number required for each connection.

d. Purlins/subpurlins size and spacing used in the test.

e. Description of the seaming operation including equipment used.

f. Maximum allowable uplift pressures. These pressures are determined from the ultimate load divided by a factor of safety equal to 1.65.

g. Any additional information required to identify the SSSMR system tested.

h. Signature and seal of an independent registered engineer who witnessed the test.

SD-13 Certificates

Structural Standing Seam Metal Roof System; GA|ED.

a. Certification that the actual thickness of uncoated sheets used in SSSMRS components including roofing panels, subpurlins, and concealed anchor clips complies with specified requirements.

b. Certification that materials used in the installation are mill certified.

c. Previous certification of SSSMR system tested under the Corps of Engineers' Standard Test Method in lieu of ASTM E 1592 testing.

d. Certification that the sheets to be furnished are produced under a continuing quality control program and that a representative sample consisting of not less than three pieces has been tested and has met the quality standards specified for factory color finish.

e. Certification of installer.

f. Warranty certificate. At the completion of the project the Contractor shall furnish signed copies of the 5-year Warranty for Structural Standing Seam Metal Roof (SSSMR) System, a sample copy of which is attached to this section, and the 20-year Manufacturer's Material Warranties.

Insulation; GA|ED.

Certificate attesting that the polyurethane or polyisocyanurate insulation furnished for the project contains recovered material, and showing an estimated percent of such recovered material.

SD-14 Samples

Accessories; GA|AR.

One sample of each type of flashing, trim, closure, thermal spacer block, cap and similar items. Size shall be sufficient to show construction and configuration.

Roof Panels; GA|AR.

One piece of each type to be used, 225 mm long, full width.

Factory Color Finish; GA|ED.

Three 75 by 125 mm samples of each type and color.

Fasteners; GA|AR.

Two samples of each type to be used, with statement regarding intended use. If so requested, random samples of bolts, nuts, and washers as delivered to the job site shall be taken in the presence of the Contracting Officer

and provided to the Contracting Officer for testing to establish compliance with specified requirements.

Insulation; FIO;AR.

One piece, 300 by 300 mm, of each type and thickness to be used, with a label indicating the rated permeance (if faced) and R-values. The flame spread, and smoke developed rating shall be shown on the label or provided in a letter of certification.

Gaskets and Insulating Compounds; FIO;AR.

Two samples of each type to be used and descriptive data.

Sealant; FIO;AR.

One sample, approximately 0.5 kg, and descriptive data.

Concealed Anchor Clips; FIO;AR.

Two samples of each type used.

Subpurlins; FIO;AR.

One piece, 225 mm long.

EPDM Rubber Boots; FIO;AR.

One piece of each type.

1.6 DELIVERY AND STORAGE

Materials shall be delivered to the site in a dry and undamaged condition and stored out of contact with the ground. Materials shall be covered with weathertight coverings and kept dry. Storage conditions shall provide good air circulation and protection from surface staining.

1.7 WARRANTIES

The SSSMR system shall be warranted as outlined below. Any emergency temporary repairs conducted by the owner shall not negate the warranties.

1.7.1 Contractor's Weathertightness Warranty

The SSSMR system shall be warranted by the Contractor on a no penal sum basis for a period of five years against material and workmanship deficiencies; system deterioration caused by ordinary exposure to the elements and service design loads, water leaks, and wind uplift damage. The SSSMR system covered under this warranty shall include the entire roofing system including, but not limited to, the following: panel seams and joint, all accessories, components and trim; penetrations such as vents, curbs, and skylights; interior or exterior gutters and downspouts; eaves, ridge, hip, valley, rake, gable, wall, or other roof system flashings installed to provide a weathertight roof system; and items specified in other sections of these specifications that become part of the structural standing seam metal roof system. All material and workmanship deficiencies, system deterioration caused by ordinary exposure to the elements and service design loads, water leaks and wind uplift damage shall be repaired as approved by the Contracting Officer. This warranty shall

warrant and cover the entire cost of repair or replacement, including all material, labor, and related markups. The Contractor may supplement this warranty with written warranties from the installer and/or manufacturer, which shall be submitted along with Contractor's warranty; however, the Contractor shall be ultimately responsible for this warranty. The Contractor's written warranty shall be as outlined in attached example WARRANTY FOR STRUCTURAL STANDING SEAM METAL ROOF (SSSMR) SYSTEM, and shall start upon final acceptance of the facility or the date the Government takes possession, whichever is earlier. It shall be understood that the Contractor's Performance Bond will remain effective throughout the five year Contractor's warranty period for the entire SSSMR system as outlined above.

1.7.2 Manufacturer's Material Warranties.

The Contractor shall furnish, in writing, the following manufacturer's material warranties which cover all SSSMR system components such as roof panels, anchor clips and fasteners, flashing, accessories, and trim, fabricated from coil material:

a. A manufacturer's 20 year material warranty warranting that the aluminum, zinc-coated steel, aluminum-zinc alloy coated steel or aluminum-coated steel as specified herein will not rupture, structurally fail, fracture, deteriorate, or become perforated under normal design atmospheric conditions and service design loads. Liability under this warranty shall be limited exclusively to the cost of either repairing or replacing nonconforming, ruptured, perforated, or structurally failed coil material.

b. A manufacturer's 20 year exterior material finish warranty on the factory colored finish warranting that the finish, under normal atmospheric conditions at the site, will not crack, peel, or delaminate; chalk in excess of a numerical rating of eight, as determined by ASTM D 4214test procedures; or change color in excess of five CIE or Hunter Lab color difference (delta E) units in accordance with ASTM D 2244. Liability under this warranty is exclusively limited to refinishing with an air-drying version of the specified finish or replacing the defective coated material.

PART 2 PRODUCTS

2.1 ROOF PANELS

Panels shall be steel or aluminum and shall have a factory color finish. Length of sheets shall be sufficient to cover the entire length of any unbroken roof slope for slope lengths that do not exceed 9 m. When length of run exceeds 9 m and panel laps are provided, each sheet in the run shall extend over three or more supports. Sheets longer than 30 m may be furnished if approved by the Contracting Officer. Width of sheets shall provide not more than 600 mm of coverage in place. SSSMR system with roofing panels greater than 300 mm in width shall have standing seams rolled during installation by an electrically driven seaming machine. Height of standing seams shall be not less than 63.5 mm for rolled seam and 63.5 mm for seams that are not rolled.

2.1.1 Steel Panels

Steel panels shall be zinc-coated steel conforming to ASTM A 653; aluminum-zinc alloy coated steel conforming to ASTM A 792, AZ 55 coating;

or aluminum-coated steel conforming to ASTM A 463, Type 2, coating designation T2 65. Uncoated panels shall be 0.6 mm thick minimum. Panels shall be within 95 percent of tested thickness. Prior to shipment, mill finish panels shall be treated with a passivating chemical to inhibit the formation of oxide corrosion products. Panels that have become wet during shipment and have started to oxidize shall be rejected.

2.1.2 Aluminum Panels

Alloy conforming to ASTM B 209, temper as required for the forming operation, minimum 0.8 mm thick.

2.2 CONCEALED ANCHOR CLIPS

Concealed anchor clips shall be the same as the tested roofing system. Clip bases shall have factory punched or drilled holes for attachment. Clips shall be made from multiple pieces with the allowance for the total thermal movement required to take place within the clip. Single piece clips may be acceptable when the manufacturer can substantiate that the system can accommodate the thermal cyclic movement under sustained live or snow loads.

2.3 ACCESSORIES

Flashing, trim, metal closure strips, caps and similar metal accessories shall be the manufacturer's standard products. Exposed metal accessories shall be finished to match the panels furnished. Molded closure strips shall be bituminous-saturated fiber, closed-cell or solid-cell synthetic rubber or neoprene, or polyvinyl chloride premolded to match configuration of the panels and shall not absorb or retain water. Die cast metal closures shall be installed with double bead tape sealant and fasteners that stitch the panel to a 2 mm preformed backer plate to ensure a positive compression of the tape sealant. The use of a continuous angle butted to the panel ends to form a closure will not be allowed.

2.3.1 Snow Guards

Snow gaurds shall consist of same material, finish and color as the standing seam metal roof panels. Snow guards shall be mechanically attached to top of standing seam. A friction system with set screws shall be used. Snow guards shall be furnished as indicated.

2.4 FASTENERS

Fasteners for steel roof panels shall be zinc-coated steel, aluminum, corrosion resisting steel, or nylon capped steel, type and size specified below or as otherwise approved for the applicable requirements. Fasteners for aluminum roof panels shall be aluminum or corrosion resisting steel. Fasteners for structural connections shall provide both tensile and shear ultimate strengths of not less than 3340 N per fastener. Fasteners for accessories shall be the manufacturer's standard. Exposed roof fasteners shall be sealed or have sealed washers on the exterior side of the roof to waterproof the fastener penetration. Washer material shall be compatible with the roofing; have a minimum diameter of 10 mm for structural connections; and gasketed portion of fasteners or washers shall be neoprene or other equally durable elastomeric material approximately 3 mm thick. Exposed fasteners for factory color finished panels shall be factory finished to match the color of the panels.

2.4.1 Screws

Screws for attaching anchor devices shall be not less than No. 14. Actual screw pull out test results shall be performed for the actual material gage and yield strength of the structural purlins or subpurlins to which the clip is to be anchored/attached. Other screws shall be as recommended by the manufacturer to meet the strength design requirements of the panels.

2.4.2 Bolts

Bolts shall be not less than 6 mm diameter, shouldered or plain shank as required, with locking washers and nuts.

2.4.3 Structural Blind Fasteners

Blind screw-type expandable fasteners shall be not less than 6 mm diameter. Blind (pop) rivets shall be not less than 7 mm minimum diameter.

2.5 SUBPURLINS

Cold formed supporting structural members/subpurlins shall have a minimum thickness of 1.5 mm and a minimum tensile yield strength of 345 MPa. Hot rolled structural members shall have a minimum thickness of 6 mm and a minimum tensile yield strength of 248 MPa. Subpurlins shall be galvanized or given one coat of shop paint.

2.6 FACTORY COLOR FINISH

Panels shall have a factory applied polyvinylidene fluoride finish on the exposed side. The exterior finish shall consist of a baked-on topcoat with an appropriate prime coat. Color shall match the color indicated on the drawings in the COLOR SCHEDULE. The exterior coating shall be a nominal 0.025 mm thickness consisting of a topcoat of not less than 0.018 mm dry film thickness and the paint manufacturer's recommended primer of not less than 0.005 mm thickness. The interior color finish shall consist of a backer coat with a dry film thickness of 0.013 mm a 0.005 mmthick prime coat. The exterior color finish shall meet the test requirements specified below.

2.6.1 Salt Spray Test

A sample of the sheets shall withstand a salt spray test for a minimum of 1000 hours in accordance with ASTM B 117, including the scribe requirement in the test. Immediately upon removal of the panel from the test, the coating shall receive a rating of 10, no blistering, as determined by ASTM D 714; and a rating of 1 mm failure at scribe, as determined by ASTM D 1654.

2.6.2 Formability Test

When subjected to testing in accordance with ASTM D 522 Method B, 3 mm diameter mandrel, the coating film shall show no evidence of cracking to the naked eye.

2.6.3 Accelerated Weathering, Chalking Resistance and Color Change

A sample of the sheets shall be tested for a minimum of 1000 hours in accordance with ASTM G 23 Method 2, using Type EH apparatus with cycles of 60 minutes radiation and 60 minutes condensing humidity. The coating shall

withstand the weathering test without cracking, peeling, blistering, loss of adhesion of the protective coating, or corrosion of the base metal. Protective coating that can be readily removed from the base metal with tape in accordance with ASTM D 3359, Test Method B, shall be considered as an area indicating loss of adhesion. Following the accelerated weathering test, the coating shall have a chalk rating not less than No. 8 in accordance with ASTM D 4214 test procedures, and the color change shall not exceed 5 CIE or Hunter Lab color difference (delta E) units in accordance with ASTM D 2244. For sheets required to have a low gloss finish, the chalk rating shall be not less than No. 6 and the color difference shall be not greater than 7 units.

2.6.4 Humidity Test

When subjected to a humidity cabinet test in accordance with ASTM D 2247 for 1000 hours, a scored panel shall show no signs of blistering, cracking, creepage or corrosion.

2.6.5 Impact Resistance

Factory-painted sheet shall withstand direct and reverse impact in accordance with ASTM D 2794 13 mm diameter hemispherical head indenter, equal to 6.7 times the metal thickness in mm, expressed in Newton-meters, with no loss of adhesion.

2.6.6 Abrasion Resistance Test

When subjected to the falling sand test in accordance with ASTM D 968, Method A, the coating system shall withstand a minimum of 50 liters of sand before the appearance of the base metal. The term "appearance of base metal" refers to the metallic coating on steel or the aluminum base metal.

2.6.7 Specular Gloss

Finished roof surfaces shall have a specular gloss value of 30 plus or minus 10 at 60 degrees when measured in accordance with ASTM D 523.

2.6.8 Pollution Resistance

Coating shall show no visual effects when covered spot tested in a 10 percent hydrochloric acid solution for 24 hours in accordance with ASTM D 1308.

2.7 SEALANT

Sealants shall be elastomeric type containing no oil or asphalt. Exposed sealant shall be colored to match the applicable building color and shall cure to a rubberlike consistency. Sealant placed in the roof panel standing seam ribs shall be provided in accordance with the manufacturer's recommendations.

2.8 GASKETS AND INSULATING COMPOUNDS

Gaskets and insulating compounds shall be nonabsorptive and suitable for insulating contact points of incompatible materials. Insulating compounds shall be nonrunning after drying.

2.9 EPDM RUBBER BOOTS

Flashing devices around pipe penetrations shall be flexible, one-piece devices molded from weather-resistant EPDM rubber. Rubber boot material shall be as recommended by the manufacturer. The boots shall have base rings made of aluminum or corrosion resisting steel that conform to the contours of the roof panel to form a weather-tight seal.

2.10 PREFABRICATED CURBS AND EQUIPMENT SUPPORTS

Prefabricated curbs and equipment supports shall be of structural quality, hot-dipped galvanized or galvalume sheet steel, factory primed and prepared for painting with mitered and welded joints. Integral base plates and water diverter crickets shall be provided. Minimum height of curb shall be 200 mm above finish roof. Curbs shall be constructed to match roof slope and to provide a level top surface for mounting of equipment. Curb flange shall be constructed to match configuration of roof panels. Curb size shall be coordinated, prior to curb fabrication, with the mechanical equipment to be supported. Strength requirements for equipment supports shall be coordinated to include all anticipated loads.

PART 3 EXECUTION

3.1 INSTALLATION

Installation shall be in accordance with the manufacturer's erection instructions and drawings. Dissimilar materials which are not compatible when contacting each other shall be insulated by means of gaskets or insulating compounds. Molded closure strips shall be installed wherever roofing sheets terminate in open-end configurations, exclusive of flashings. The closure strip installation shall be weather-tight and sealed. Screws shall be installed with a clutching screw gun, to assure screws are not stripped. Field test shall be conducted on each gun prior to starting installation and periodically thereafter to assure it is adjusted properly to install particular type and size of screw as recommended by manufacturer's literature. Improper or mislocated drill holes shall be plugged with an oversize screw fastener and gasketed washer; however, sheets with an excess of such holes or with such holes in critical locations shall not be used. Exposed surfaces and edges shall be kept clean and free from sealant, metal cuttings, hazardous burrs, and other foreign material. Stained, discolored, or damaged sheets shall be removed from the site.

3.1.1 Field Forming of Panels

When roofing panels are formed from factory-color-finished steel coils at the project site, the same care and quality control measures that are taken in shop forming of roofing panels shall be observed. Rollformer shall be operated by the metal roofing manufacturer's representative. In cold weather conditions, preheating of the steel coils to be field formed shall be performed as necessary just prior to the rolling operations.

3.1.2 Subpurlins

Unless otherwise shown, subpurlins shall be anchored to the purlins or other structural framing members with bolts or screws. Attachment to the substrate (when provided) or to the panels is not permitted. The subpurlin spacing shall not exceed 750 mm on centers at the corner, edge and ridge zones, and 1500 mm maximum on centers for the remainder of the roof. Corner, edge, and ridge zones are as defined in ASCE 7.

3.1.3 Roof Panel Installation

Roof panels shall be installed with the standing seams in the direction of the roof slope. The side seam connections for installed panels shall be completed at the end of each day's work. Method of applying joint sealant shall conform to the manufacturer's recommendation to achieve a complete weather-tight installation. End laps of panels shall be provided in accordance with the manufacturer's instructions. Closures, flashings, EPDM rubber boots, roof curbs, and related accessories shall be installed according to the manufacturer's drawings. Fasteners shall not puncture roofing sheets except as provided for in the manufacturer's instructions for erection and installation. Expansion joints for the standing seam roof system shall be installed at locations indicated on the contract drawings and other locations indicated on the manufacturer's drawings.

3.1.4 Concealed Anchor Clips

Concealed anchor clips shall be fastened directly to the structural framing members. Attachment to the substrate (when provided) or to the panels is not permitted. The maximum distance, parallel to the seams, between clips shall be 750 mm on center at the corner, edge, and ridge zones, and 1500 mm maximum on centers for the remainder of the roof.

3.1.5 Snow Guards

Snow guards shall be installed where indicated and shall conform to the manufacturer's recommendations.

3.2 CLEANING AND TOUCH-UP

Exposed SSSMR systems shall be cleaned at completion of installation. Debris that could cause discoloration and harm to the panels, flashings, closures and other accessories shall be removed. Grease and oil films, excess sealants, and handling marks shall be removed and the work shall be scrubbed clean. Exposed metal surfaces shall be free of dents, creases, waves, scratch marks, and solder or weld marks. Immediately upon detection, abraded or corroded spots on shop-painted surfaces shall be wire brushed and touched up with the same material used for the shop coat. Factory color finished surfaces shall be touched up with the manufacturer's recommended touch up paint.

CONTRACTOR'S FIVE (5) YEAR NO PENAL SUM WARRANTY
FOR
STRUCTURAL STANDING SEAM METAL ROOF (SSSMR) SYSTEM

PROJECT DESCRIPTION AND LOCATION (Include Bldg. No.):_____
CORPS OF ENGINEERS CONTRACT NUMBER:_____
SPECIFICATION SECTION NUMBER & DESCRIPTION:

07416 STRUCTURAL STANDING SEAM METAL ROOF (SSSMR) SYSTEM

CONTRACTOR:_____

ADDRESS:_____

POINT OF CONTACT:_____

TELEPHONE NUMBER:_____

OWNER:_____

ADDRESS:_____

POINT OF CONTACT:_____

TELEPHONE NUMBER:_____

CONSTRUCTION AGENT:_____

ADDRESS:_____

POINT OF CONTACT:_____

TELEPHONE NUMBER:_____

THE SSSMR SYSTEM INSTALLED ON THE ABOVE NAMED BUILDING IS WARRANTED BY _____ FOR A PERIOD OF FIVE (5) YEARS AGAINST WORKMANSHIP AND MATERIAL DEFICIENCIES, WIND DAMAGE, STRUCTURAL FAILURE AND LEAKAGE. THE SSSMR SYSTEM COVERED UNDER THIS WARRANTY SHALL INCLUDE THE ENTIRE ROOFING SYSTEM, INCLUDING THE STANDING SEAM METAL ROOF PANELS, PANEL FINISHES, ROOFING SECUREMENT COMPONENTS, ALL ACCESSORIES, COMPONENTS, AND TRIM; INCLUDING PENETRATIONS SUCH VENTS, CURBS, SKYLIGHTS; INTERIOR OR EXTERIOR GUTTERS AND DOWNSPOUTS; EAVES, RIDGE, HIP, VALLEY, RAKE, GABLE, WALL, OR OTHER ROOF SYSTEM FLASHINGS INSTALLED TO PROVIDE A WEATHERTIGHT ROOF SYSTEM; AND ITEMS SPECIFIED IN OTHER SECTIONS OF THE SPECIFICATIONS THAT ARE PART OF THE SSSMR SYSTEM. ALL LEAKS SHALL BE REPAIRED AS APPROVED BY THE CONTRACTING OFFICER. THIS WARRANTY SHALL COVER THE ENTIRE COST OF REPAIR OR REPLACEMENT, INCLUDING ALL MATERIAL, LABOR, AND RELATED MARKUPS. THE ABOVE REFERENCED WARRANTY COMMENCED ON THE DATE OF FINAL ACCEPTANCE ON _____

CONTRACTOR'S FIVE (5) YEAR NO PENAL SUM WARRANTY
FOR
STRUCTURAL STANDING SEAM METAL ROOF (SSSMR) SYSTEM
AND WILL REMAIN IN EFFECT FOR STATED DURATION FROM THIS DATE.

SIGNED, DATED, AND NOTARIZED (BY COMPANY PRESIDENT)

_____

(Company President) (Date)

CONTRACTOR'S FIVE (5) YEAR NO PENAL SUM WARRANTY
FOR
STRUCTURAL STANDING SEAM METAL ROOF (SSSMR) SYSTEM
(continued)

THE CONTRACTOR MAY SUPPLEMENT THIS WARRANTY WITH WRITTEN WARRANTIES FROM THE INSTALLER AND/OR MANUFACTURER OF THE SSSMR SYSTEM, WHICH SHALL BE SUBMITTED ALONG WITH THE CONTRACTOR'S WARRANTY. HOWEVER, THE CONTRACTOR WILL BE ULTIMATELY RESPONSIBLE FOR THE WARRANTY AS OUTLINED IN THE SPECIFICATIONS AND AS INDICATED IN THIS WARRANTY EXAMPLE.

EXCLUSIONS FROM COVERAGE

1. NATURAL DISASTERS, ACTS OF GOD (LIGHTING, FIRE, EXPLOSIONS, SUSTAINED WIND FORCES IN EXCESS OF THE DESIGN CRITERIA, EARTHQUAKES, AND HAIL).

2. ACTS OF NEGLIGENCE OR ABUSE OR MISUSE BY GOVERNMENT OR OTHER PERSONNEL, INCLUDING ACCIDENTS, VANDALISM, CIVIL DISOBEDIENCE, WAR, OR DAMAGE CAUSED BY FALLING OBJECTS.

3. DAMAGE BY STRUCTURAL FAILURE, SETTLEMENT, MOVEMENT, DISTORTION, WARPAGE, OR DISPLACEMENT OF THE BUILDING STRUCTURE OR ALTERATIONS MADE TO THE BUILDING.

4. CORROSION CAUSED BY EXPOSURE TO CORROSIVE CHEMICALS, ASH OR FUMES GENERATED OR RELEASED INSIDE OR OUTSIDE THE BUILDING FROM CHEMICAL PLANTS, FOUNDRIES, PLATING WORKS, KILNS, FERTILIZER FACTORIES, PAPER PLANTS, AND THE LIKE.

5. FAILURE OF ANY PART OF THE SSSMR SYSTEM DUE TO ACTIONS BY THE OWNER TO INHIBIT FREE DRAINAGE FROM THE ROOF AND ALLOW PONDING WATER. CONTRACTOR'S DESIGN SHALL INSURE FREE DRAINAGE FROM THE ROOF AND NOT ALLOW PONDING WATER.

6. THIS WARRANTY APPLIES TO THE STRUCTURAL STANDING SEAM METAL ROOF (SSSMR) SYSTEM. IT DOES NOT INCLUDE ANY CONSEQUENTIAL DAMAGE TO THE BUILDING INTERIOR OR CONTENTS WHICH IS COVERED BY THE WARRANTY OF CONSTRUCTION CLAUSE INCLUDED IN THIS CONTRACT.

7. THIS WARRANTY CANNOT BE TRANSFERRED TO ANOTHER OWNER WITHOUT WRITTEN CONSENT OF THE CONTRACTOR AND THIS WARRANTY AND THE CONTRACT PROVISIONS WILL TAKE PRECEDENCE OVER ANY CONFLICTS WITH STATE STATUTES, UNLESS OTHERWISE APPROVED IN WRITING BY THE CONTRACTING OFFICER.

LEAKS SHALL BE RESPONDED TO WITHIN 48 HOURS OF RECEIPT OF NOTICE BY TELEPHONE OR IN WRITING FROM EITHER THE OWNER, OR CONTRACTING OFFICER. EMERGENCY REPAIRS, TO PREVENT FURTHER ROOF LEAKS, SHALL BE INITIATED IMMEDIATELY; A WRITTEN PLAN SHALL BE SUBMITTED FOR APPROVAL TO REPAIR OR REPLACE THIS SSSMR SYSTEM WITHIN SEVEN CALENDAR DAYS. ACTUAL WORK FOR PERMANENT REPAIRS OR REPLACEMENT SHALL BE STARTED WITHIN 30 DAYS AFTER RECEIPT OF NOTICE, AND COMPLETED WITHIN A REASONABLE TIME FRAME. IF THE CONTRACTOR FAILS TO ADEQUATELY RESPOND TO THE WARRANTY PROVISIONS, AS STATED IN THE CONTRACT AND AS CONTAINED HEREIN, THE CONTRACTING OFFICER MAY HAVE THE SSSMR SYSTEM REPAIRED OR REPAIRED BY OTHERS AND CHARGE THE COST TO THE CONTRACTOR.

A FRAMED COPY OF THIS WARRANTY SHALL BE POSTED IN THE MECHANICAL ROOM OR OTHER APPROVED LOCATION DURING THE ENTIRE WARRANTY PERIOD.

-- End of Section --

SECTION 07530

ELASTOMERIC ROOFING (EPDM)

PART 1 GENERAL

1.1 REFERENCES

The publications listed below form a part of this specification to the extent referenced. The publications are referred to in the text by basic designation only.

AMERICAN SOCIETY FOR TESTING AND MATERIALS (ASTM)

ASTM D 4637	(1996) EPDM Sheet Used in Single-Ply Roof Membrane
ASTM E 108	(1996) Fire Tests of Roof Coverings

FACTORY MUTUAL ENGINEERING AND RESEARCH (FM)

FM P9513	(1996) Loss Prevention Data for Roofing Contractors

UNDERWRITERS LABORATORIES (UL)

UL 580	(1994; Rev thru Sep 1997) Tests for Uplift Resistance of Roof Assemblies
UL 790	(1995) Tests for Fire Resistance of Roof Covering Materials
UL 1256	(1993; Rev thru Apr 1996) Fire Test of Roof Deck Constructions

1.2 SUBMITTALS

Government approval is required for submittals with a "GA" designation; submittals having an "FIO" designation are for information only. The following shall be submitted in accordance with Section 01330 SUBMITTAL PROCEDURES:

SD-04 Drawings

Roofing System; GA|AR.

Drawings showing size of sheets, position of sheets and splices, flashing details, fastening patterns where applicable for insulation and membrane sheets, and expansion joint details. Detail showing construction of water cutoffs to be used at membrane terminations at the end of a day's work to seal the roofing system from water intrusion.

SD-06 Instructions

Installation; FIO;AR.

Manufacturer's instructions for preparing and installing the membrane, flashings, seams, insulation, nailers and other accessories.

SD-08 Statements

Protection Plan; GA|AR.

Protection plan showing areas to be protected, type of material used; a plan to protect the membrane from damage until completion of work by other trades, and a description of the method of repairing the roofing.

Inspection; FIO;AR.

The inspection procedure for substrate suitability including decks, curbs and insulation installation, prior to start of the work.

Inspection procedures during and after placement of the membrane, and after completion of work by other trades.

SD-13 Certificates

Materials; FIO;AR.

Certificates of compliance attesting that the roofing system and materials meet specification requirements. The certificates shall list the components required for the specified fire and wind uplift resistance ratings.

1.3 GENERAL REQUIREMENTS

Elastomeric membrane roofing shall be fully adhered to the roof surfaces indicated. Roofing membrane sheet widths shall be consistent with membrane attachment methods and wind uplift requirements, and shall be as large as practical to minimize joints. Membrane shall be free of defects and foreign material. Flashing work shall be coordinated to permit continuous membrane installation operations. Applied insulation shall be weatherproofed by the membrane on the same day.

1.3.1 Delivery and Storage

Materials shall be delivered to the jobsite in the manufacturer's original, unopened packages, clearly marked with the manufacturer's name, brand name, and description of contents. Materials other than ballast shall be stored in clean, dry areas. Storage temperatures shall be as specified by the manufacturer. Materials other than ballast stored on the roof shall not exceed one day's supply and shall be distributed so as not to exceed the roof live load capacity. Ballast shall be stored uncovered, shall not be in contact with sod or earth, and shall not be stored on the roof.

1.3.2 Fire Resistance

The completed roof system shall have a ASTM E 108 (same test as UL 790 and FM P9513, Appendix A) Class A/Class B classification, and meet fire test requirements of UL 1256 or FM P9513, Appendix B for roof deck construction. Compliance of each component of the roofing system shall be evidenced by label or by written certification from the manufacturer.

1.3.3 Wind Uplift Requirements

Fully adhered and mechanically attached roofing systems shall have a 180 UL 580 Class Rating or FM P9513, Appendix C Windstorm Classification. Ratings from other independent laboratories may be substituted provided that the tests, requirements and ratings are documented to be equivalent, to the satisfaction of the Contracting Officer..

1.3.4 Warranty

Manufacturer's standard warranty for the roofing system shall be provided for not less than 10 years from acceptance of the work. Warranty shall state that manufacturer shall repair or replace defective materials if the roofing system leaks or allows the insulation beneath the membrane to become wet during the period of the warranty.

PART 2 PRODUCTS

2.1 ADHESIVES

Adhesives, splicing cements, solvents, and sealants shall be as recommended by the membrane manufacturer.

2.2 FASTENERS

Fasteners for sheet-metal flashing shall be corrosion resistant steel annular-type nails or screws. Fasteners for anchoring the roofing membrane shall be as approved by the membrane manufacturer and identical to those used to obtain the wind uplift rating.

2.3 FLASHING

Flashing shall be of ultra-violet resistant materials as recommended by the membrane manufacturer. Prefabricated shaped flashings shall be used where possible. Sheared edges of metal flashings that contact the membrane shall be turned into a tight hem.

2.4 MEMBRANE

Membrane shall conform to ASTM D 4637, Type I EPDM, Grade 1; Class U, 1.52 mm minimum thickness.

2.5 PREFABRICATED ACCESSORIES

Pipe seals and expansion joint covers shall be types and sizes recommended by the membrane manufacturer.

2.6 WALKWAYS

Walkways shall be concrete pavers, 200 x 400 mm 38 mm minimum thickness, and made from 21 MPaair entrained concrete per Section 03300 CAST-IN-PLACE STRUCTURAL CONCRETE. Pavers for walkways less than 1.2 mwide may rest directly on the membrane unless underlayment is recommended by the manufacturer. Where drainage would be blocked by walkway pavers, spaces shall be provided between or below pavers to facilitate drainage. If spaces are provided between pavers, they shall be at least 25 mm wide and no more than 0.6 m apart. Space below pavers shall be provided by using pavers with drainage channels or by elevating flat bottom pavers on pedestals. Alternative walkway material may be used if recommended by the manufacturer and approved by the Contracting Officer.

PART 3 EXECUTION

3.1 ENVIRONMENTAL CONDITIONS

Membrane shall not be installed in high wind, inclement weather or when there is visible ice, frost or moisture on the deck, insulation or membrane. Membrane shall not be installed when air temperature is below the minimum specified by the membrane manufacturer.

3.2 PREPARATION

The substrate of any bay or section of the building shall be complete and suitable for insulation and membrane installation before roofing is begun. Roofing on lightweight insulating concrete shall not be scheduled until the concrete passes the air-dry density test specified in Section 03300 CAST-IN-PLACE STRUCTURAL CONCRETE. Insulation over which elastomeric roofing is installed shall conform to Section 07220 ROOF INSULATION. Surfaces against which membrane is applied shall be smooth, clean, and free from dirt, water, dew, oil, grease, sharp edges and construction debris; all joints over 6 mm wide shall be sealed; joints over 13 mm between insulation boards shall be filled with the same insulation. Wood nailers shall comply with Section 06100 ROUGH CARPENTRY.

3.3 INSTALLATION

Installation shall comply with the manufacturer's approved instructions, except as otherwise specified.

3.3.1 Flashing

Edges of membrane, projections through the roof and changes in roof planes shall be flashed. The flashing material shall be extended and sealed a minimum of 75 mm on each side of the fasteners which attach the membrane to nailers. The installed flashing shall be fastened at the top of the flashing a maximum of 300 mm on center under metal counter-flashing or cap.

3.3.2 Expansion Joints

Expansion joints shall be covered using prefabricated covers or elastomeric flashing in accordance with the manufacturer's recommendations.

3.3.3 Membrane

Membrane shall be applied in accordance with the manufacturer's instructions and the following requirements. Adjoining sheets comprising the membrane shall be adhered one to another using a butyl-based contact adhesive. Minimum width of the laps shall be 75 mm. A primer shall be used before applying the contact adhesive if required by the membrane manufacturer. In applying the contact adhesive, the minimum thickness of the wet film shall be in accordance with the membrane manufacturer's recommendations. If manufacturer's recommendations are not available, the minimum thickness shall be 0.6 mm. A wet film thickness gage shall be used to determine wet film thickness. Direction of lap shall be such that water flows over lap. Membrane joints shall be free of wrinkles or fishmouths. Before application of the contact adhesive, the rubber surfaces to be mated shall be well cleaned. Joints shall be inspected over entire length after completion and defective areas shall be resealed and patched. Damaged areas of membrane shall be removed and replaced with new materials, lapping underlying membrane by at least 75 mm on all sides.

3.3.4 Cutoffs

Cutoffs shall be installed if work day is ended or interrupted by bad weather before roof section is complete. The insulation line shall be straightened using loose-laid cut insulation and the membrane shall be sealed to the roof deck. Flutes in metal decking shall be sealed off along the cutoff edge. Membrane shall be pulled free or cut to expose the insulation when resuming work, and cut insulation sheets used for fill-in shall be removed as necessary to maintain the staggered pattern.

3.3.5 Walkways

Concrete paver walkways shall be installed on a loose-laid pad of the membrane material extending at least 25 mm beyond the walkway material, and as specified by the manufacturer. Stone ballast shall not be placed below or above walkways.

3.4 PROTECTION OF FINISHED ROOFING

The roofing membrane shall be protected from damage by other trades. After completion of work by other trades, the protection shall be removed and the roof shall be inspected. Any damage shall be repaired in accordance with the recommendations of the roofing manufacturer.

3.5 INSPECTION

The Contractor shall establish and maintain an inspection procedure to assure compliance of the installed elastomeric roofing with the contract requirements. The procedure shall include a checklist of points to be observed. Any work found not to be in compliance with the contract shall be promptly removed and replaced or corrected in an approved manner. Quality control shall include, but not be limited to, the following:

a. Observation of environmental conditions; number and skill level of roofing workers; start and end time of various tasks; condition of substrate.

b. Verification of compliance of materials before, during and after installation.

c. Inspection of insulation, nailers, flashings, penetrations and work requiring coordination with roofing.

d. Inspection of membrane placement, splicing, and attachment.

e. Inspection of placement of ballast and walkways.

f. Verification of ballast weight.

-- End of Section --

SECTION 07600

SHEET METALWORK, GENERAL

PART 1 GENERAL

1.1 REFERENCES

The publications listed below form a part of this specification to the extent referenced. The publications are referred to in the text by basic designation only.

AMERICAN SOCIETY FOR TESTING AND MATERIALS (ASTM)

ASTM A 167	(1996) Stainless and Heat-Resisting Chromium-Nickel Steel Plate, Sheet, and Strip
ASTM A 526	(1990) Steel Sheet, Zinc-Coated (Galvanized) by the Hot-Dip Process, Commercial Quality
ASTM B 32	(1995b) Solder Metal
ASTM B 209	(1995) Aluminum and Aluminum-Alloy Sheet and Plate
ASTM B 221	(1996) Aluminum and Aluminum-Alloy Extruded Bars, Rods, Wire, Shapes, and Tubes
ASTM B 370	(1992) Copper Sheet and Strip for Building Construction
ASTM D 226	(1994) Asphalt-Saturated Organic Felt Used in Roofing and Waterproofing
ASTM D 543	(1987) Resistance of Plastics to Chemical Reagents
ASTM D 822	(1995) Conducting Tests on Paint and Related Coatings and Materials Using Filtered Open-Flame Carbon-Arc Light and Water Exposure Apparatus
ASTM D 828	(1993) Tensile Breaking Strength of Paper and Paperboard
ASTM D 1784	(1992) Rigid Poly(Vinyl Chloride) (PVC) Compounds and Chlorinated Poly(Vinyl Chloride) (CPVC) Compounds
ASTM D 2822	(1991) Asphalt Roof Cement
ASTM D 3656	(1994) Insect Screening and Louver Cloth Woven from Vinyl-Coated Glass Yarns

ASTM D 4022	(1994) Coal Tar Roof Cement, Asbestos Containing
ASTM D 4586	(1993) Asphalt Roof Cement, Asbestos Free
ASTM E 96	(1995) Water Vapor Transmission of Materials

INSECT SCREENING WEAVERS ASSOCIATION (ISWA)

ISWA IWS 089	(1990) Recommended Standards and Specifications for Insect Wire Screening (Wire Fabric)

SHEET METAL AND AIR CONDITIONING CONTRACTORS NATIONAL ASSOCIATION (SMACNA)

SMACNA-02	(1993) Architectural Sheet Metal Manual

1.2 GENERAL REQUIREMENTS

Sheet metalwork shall be accomplished to form weathertight construction without waves, warps, buckles, fastening stresses or distortion, and shall allow for expansion and contraction.

1.2.1 Coordination

Cutting, fitting, drilling, and other operations in connection with sheet metal required to accommodate the work of other trades shall be performed by sheet metal mechanics. Application of bituminous strip flashing over various sheet metal items is covered in Section 07510 BUILT-UP ROOFING. Installation of sheet metal items used in conjunction with roofing shall be coordinated with roofing work to permit continuous roofing operations. Sheet metalwork pertaining to heating, ventilating, and air conditioning is specified in Section 15895 AIR SUPPLY, DISTRIBUTION, VENTILATION AND EXHAUST SYSTEM.

1.3 SUBMITTALS

Government approval is required for submittals with a "GA" designation; submittals having an "FIO" designation are for information only. The following shall be submitted in accordance with Section 01330 SUBMITTAL PROCEDURES:

SD-04 Drawings

Materials; FIO;AR.

Drawings of sheet metal items showing weights, gauges or thicknesses; types of materials; expansion-joint spacing; fabrication details; and installation procedures.

1.4 DELIVERY, STORAGE, AND HANDLING

Materials shall be adequately packaged and protected during shipment and shall be inspected for damage, dampness, and wet-storage stains upon delivery to the jobsite. Materials shall be clearly labeled as to type and manufacturer. Sheet metal items shall be carefully handled to avoid

damage. Materials shall be stored in dry, ventilated areas until immediately before installation.

PART 2 PRODUCTS

2.1 MATERIALS

Lead, lead-coated metal, and galvanized steel shall not be used. Any metal listed by SMACNA-02 for a particular item may be used, unless otherwise specified or indicated. Materials shall conform to the requirements specified below and to the thicknesses and configurations established in SMACNA-02. Different items need not be of the same metal, except that if copper is selected for any exposed item, all exposed items shall be copper.

2.1.1 Accessories

Accessories and other items essential to complete the sheet metal installation, though not specifically indicated or specified, shall be provided.

2.1.2 Aluminum Extrusions

ASTM B 221, Alloy 6063, Temper T5.

2.1.3 Bituminous Cement

Type I asphalt cement conforming to ASTM D 2822 or ASTM D 4586. For coal tar roofing; coal tar cement conforming to ASTM D 4022.

2.1.4 Sealant

Unless otherwise specified, sealant shall be an elastomeric weather resistant sealant as specified in Section 07920 JOINT SEALING.

2.1.5 Fasteners

Fasteners shall be compatible with the fastened material and shall be the type best suited for the application.

2.1.6 Felt

ASTM D 226, Type I.

2.1.7 Polyvinyl Chloride (PVC) Reglets

ASTM D 1784, Class 14333D, 1.9 mm minimum thickness.

2.1.8 Aluminum Alloy Sheet and Plate

ASTM B 209, anodized color as indicated on the drawings, , form, alloy, and temper appropriate for use.

2.1.9 Copper

ASTM B 370, Temper H 00.

2.1.10 Stainless Steel

ASTM A 167, Type 302 or 304; fully annealed, dead soft temper.

2.1.11 Solder

ASTM B 32, 95-5 tin-antimony.

2.1.12 Through-Wall Flashing

a. Electro-sheet copper not less than 0.14 kg, factory coated both sides with acid- and alkali-resistant bituminous compound not less than 1.8 kg per square meter or factory covered both sides with asphalt-saturated cotton fabric, asphalt saturated glass-fiber fabric, or with 18 kg reinforced kraft paper bonded with asphalt.

b. Stainless steel, Type 304, not less than 0.08 mm thick, completely encased by and permanently bonded on both sides to 23 kg high strength bituminized crepe kraft paper, using hot asphalt, heat, and pressure.

c. Nonreinforced, waterproof, impermeable extruded elastomeric single ply sheeting not less than 0.76 mm thick.

d. 0.09 kg copper sheet, with 0.05 mm of dense, clear, polyethylene sheet bonded to each side of the copper.

e. Other through-wall flashing material may be used provided the following performance criteria are met.

(1) No cracking or flaking when bent 180 degrees over a 0.8 mm mandrel and rebent at the same point over the same mandrel in an opposite direction at 0 degree C.

(2) Water vapor permeability not more than 115 ng per Paper second per square meter (2 perms) when tested in accordance with ASTM E 96.

(3) Minimum breaking strength of 24 kgf/15 mm width in the weakest direction when tested in accordance with ASTM D 828.

(4) No visible deterioration after being subjected to a 400-hour direct weathering test in accordance with ASTM D 822.

(5) No shrinkage in length or width and less than 5 percent loss of breaking strength after a 10-day immersion, per ASTM D 543, in 5 percent (by weight) solutions, respectively, of sulfuric acid, hydrochloric acid, sodium hydroxide or saturated lime (calcium hydroxide).

2.1.13 Louver Screen

Type III aluminum alloy insect screening conforming to ISWA IWS 089and louver cloth conforming to ASTM D 3656.

2.1.14 Galvanized Steel

ASTM A 526, Coating G90.

PART 3 EXECUTION

3.1 GENERAL

Items such as gutters, downspouts and louvers shall be fabricated in conformance with SMACNA-02 and as indicated. Unless otherwise specified or indicated, exposed edges shall be folded back to form a 13 mm (1/2 inch) hem on the concealed side, and bottom edges of exposed vertical surfaces shall be angled to form drips. Bituminous cement shall not be placed in contact with roofing membranes other than built-up roofing.

3.2 EXPANSION JOINTS

Expansion joints shall be provided as specified in SMACNA-02. Expansion joints in continuous sheet metal shall be provided at 12.0 meter intervals for copper, galvanized steel and stainless steel and at 9.6 meter intervals for aluminum, except extruded aluminum gravel stops and fasciae which shall have expansion joints at not more than 3.6 meter spacing. Joints shall be evenly spaced. An additional joint shall be provided where the distance between the last expansion joint and the end of the continuous run is more than half the required interval spacing.

3.3 PROTECTION OF ALUMINUM

Aluminum shall not be used where it will be in contact with copper or where it will contact water which flows over copper surfaces. Aluminum and galvanized steel that will be in contact with wet or pressure-treated wood, mortar, concrete, masonry, or ferrous metals shall be protected against galvanic or corrosive action by one of the following methods:

3.3.1 Paint

Aluminum surfaces shall be solvent cleaned and given one coat of zinc-molybdate primer and one coat of aluminum paint as specified in Section 09900 PAINTING, GENERAL.

3.3.2 Nonabsorptive Tape or Gasket

Nonabsorptive tape or gasket shall be placed between the adjoining surfaces and cemented to the aluminum surface using a cement compatible with aluminum.

3.4 CONNECTIONS AND JOINTING

3.4.1 Soldering

Soldering shall apply to copper, galvanized steel and stainless steel items. Edges of sheet metal shall be pretinned before soldering is begun. Soldering shall be done slowly with well heated soldering irons so as to thoroughly heat the seams and completely sweat the solder through the full width of the seam. Edges of stainless steel to be pretinned shall be treated with soldering acid flux. Soldering shall follow immediately after application of the flux. Upon completion of soldering, the acid flux residue shall be thoroughly cleaned from the sheet metal with a water solution of washing soda and rinsed with clean water.

3.4.2 Riveting

Joints in aluminum sheets 1.0 mm or less in thickness shall be mechanically made.

3.4.3 Seaming

Flat-lock and soldered-lap seams shall finish not less than 25 mm wide. Unsoldered plain-lap seams shall lap not less than 75 mm unless otherwise specified. Flat seams shall be made in the direction of the flow.

3.5 CLEATS

A continuous cleat shall be provided where indicated or specified to secure loose edges of the sheet metalwork. Butt joints of cleats shall be spaced approximately 3 mm apart. The cleat shall be fastened to supporting wood construction with nails evenly spaced not over 300 mm on centers. Where the fastening is to be made to concrete or masonry, screws shall be used and shall be driven in expansion shields set in concrete or masonry.

3.6 GUTTERS AND DOWNSPOUTS

Gutters and downspouts shall be installed as indicated. Gutters shall be supported as indicated. Downspouts shall be rigidly attached to the building. Supports for downspouts shall be spaced according to manufacturer's recommendations.

3.7 FLASHINGS

Flashings shall be installed at locations indicated and as specified below. Sealing shall be according to the flashing manufacturer's recommendations. Flashings shall be installed at intersections of roof with vertical surfaces and at projections through roof, except that flashing for heating and plumbing, including piping, roof, and floor drains, and for electrical conduit projections through roof or walls are specified in other sections. Except as otherwise indicated, counter flashings shall be provided over base flashings. Perforations in flashings made by masonry anchors shall be covered up by an application of bituminous plastic cement at the perforation. Flashing shall be installed on top of joint reinforcement. Flashing shall be formed to direct water to the outside of the system.

3.7.1 Base Flashing

Metal base flashing shall be coordinated with roofing work. Metal base flashing shall be set in plastic bituminous cement over the roofing membrane, nailed to nailing strip, and secured in place on the roof side with nails spaced not more than 75 mm on centers. Metal base flashing shall not be used on built-up roofing.

3.7.2 Counter Flashings

Except as otherwise indicated, counter flashings shall be provided over base flashings. Counter flashing shall be installed as shown [on the drawings] [in SMACNA-02]. Where bituminous base flashings are provided, the counter flashing shall extend down as close as practicable to the top of the cant strip. Counter flashing shall be factory formed to provide spring action against the base flashing.

3.7.3 Stepped Flashing

Stepped flashing shall be installed where sloping roofs surfaced with shingles abut vertical surfaces. Separate pieces of base flashing shall be placed in alternate shingle courses.

3.7.4 Through-Wall Flashing

Through-wall flashing includes sill, lintel, and spandrel flashing. The flashing shall be laid with a layer of mortar above and below the flashing so that the total thickness of the two layers of the mortar and flashing are the same thickness as the regular mortar joints. Flashing shall not extend further into the masonry backup wall than the first mortar joint. Joints in flashing shall be lapped and sealed. Flashing shall be one piece for lintels and sills.

3.7.4.1 Lintel Flashing

Lintel flashing shall extend the full length of lintel. Flashing shall extend through the wall one masonry course above the lintels and shall be bent down over the vertical leg of the outer steel lintel angle not less than 50 mm, or shall be applied over top of masonry and precast concrete lintels. Bedjoints of lintels at control joints shall be underlaid with sheet metal bond breaker.

3.7.4.2 Sill Flashing

Sill flashing shall extend the full width of the sill and not less than 100 mm beyond ends of sill except at control joint where the flashing shall be terminated at the end of the sill.

3.7.5 Valley Flashing

Valley flashing shall be installed as specified in SMACNA-02 and as indicated.

3.8 GRAVEL STOPS AND FASCIA

Gravel stops and fascia shall be fabricated and installed as indicated and in accordance with SMACNA-02.

3.9 INSTALLATION OF LOUVERS

Louvers shall be rigidly attached to the supporting construction. The installation shall be rain-tight. Louver screen shall be installed as indicated.

3.10 REGLETS

Reglets shall be a factory fabricated product of proven design, complete with fittings and special shapes as required. Open-type reglets shall be filled with fiberboard or other suitable separator to prevent crushing of the slot during installation. Reglet plugs shall be spaced not over 300 mm on centers and reglet grooves shall be filled with sealant. Friction or slot-type reglets shall have metal flashings inserted the full depth of slot and shall be lightly punched every 300 mm to crimp the reglet and counter flashing together. Polyvinyl chloride reglets shall be sealed with the manufacturer's recommended sealant.

3.11 CONTRACTOR QUALITY CONTROL

The Contractor shall establish and maintain a quality control procedure for sheet metal used in conjunction with roofing to assure compliance of the installed sheet metalwork with the contract requirements. Any work found not to be in compliance with the contract shall be promptly removed and replaced or corrected in an approved manner. Quality control shall

include, but not be limited to, the following:

a. Observation of environmental conditions; number and skill level of sheet metal workers; condition of substrate.

b. Verification of compliance of materials before, during, and after installation.

c. Inspection of sheet metalwork for proper size and thickness, fastening and joining, and proper installation.

The actual quality control observations and inspections shall be documented and a copy of the documentation furnished to the Contracting Officer at the end of each day.

-- End of Section --

SECTION 07900

JOINT SEALING

PART 1 GENERAL

1.1 REFERENCES

The publications listed below form a part of this specification to the extent referenced. The publications are referred to in the text by basic designation only.

AMERICAN SOCIETY FOR TESTING AND MATERIALS (ASTM)

ASTM C 509	(1994) Elastomeric Cellular Preformed Gasket and Sealing Material
ASTM C 734	(1993) Low-Temperature Flexibility of Latex Sealants After Artificial Weathering
ASTM C 834	(1995) Latex Sealants
ASTM C 920	(1994) Elastomeric Joint Sealants
ASTM C 1085	(1991) Butyl Rubber-Based Solvent-Release Sealants
ASTM D 217	(1994) Cone Penetration of Lubricating Grease
ASTM D 1056	(1991) Flexible Cellular Materials - Sponge or Expanded Rubber
ASTM D 1565	(1981; R 1990) Flexible Cellular Materials - Vinyl Chloride Polymers and Copolymers (Open-Cell Foam)
ASTM E 84	(1996a) Surface Burning Characteristics of Building Materials

1.2 SUBMITTALS

Government approval is required for submittals with a "GA" designation; submittals having an "FIO" designation are for information only. The following shall be submitted in accordance with Section 01330 SUBMITTAL PROCEDURES:

SD-01 Data

Backing; FIO;AR. Bond-Breaker; FIO;AR.

Sealant; FIO;AR.

Manufacturer's descriptive data including storage requirements, shelf life, curing time, instructions for mixing and application, and primer data (if required). A copy of the Material Safety Data Sheet shall be provided for

each solvent, primer or sealant material.

SD-13 Certificates

Sealant; FIO;AR.

Certificates of compliance stating that the materials conform to the specified requirements.

1.3 ENVIRONMENTAL REQUIREMENTS

The ambient temperature shall be within the limits of 4 to 32 degrees C when the sealants are applied.

1.4 DELIVERY, STORAGE AND HANDLING

Materials shall be delivered to the job in the manufacturer's original unopened containers. The container label or accompanying data sheet shall include the following information as applicable: manufacturer, name of material, formula or specification number, lot number, color, date of manufacture, mixing instructions, shelf life, and curing time at the standard conditions for laboratory tests. Store and handle materials in compliance with manufacturer's written instructions to prevent their deterioration or damage due to moisture, high or low temperatures, contaminants, or other causes. Materials shall be stored at temperatures between 4 and 32 degrees C unless otherwise specified by the manufacturer. Close and seal tightly all partly-used sealant containers and store protected in well-ventilated fire-safe areas at a moderate temperature. Place used sealant tubes and other containers in areas designated for hazardous materials.

PART 2 PRODUCTS

2.1 BACKING

Provide sealant backings of material and type that are nonstraining; are compatible with joint substrates, sealants, primers, and other joint fillers; and are approved for applications indicated by sealant manufacturer based on field experience and laboratory testing. Backing shall be 25 to 33 percent oversize for closed cell and 40 to 50 percent oversize for open cell material, unless otherwise indicated.

2.1.1 Rubber

Cellular rubber sponge backing shall be ASTM D 1056, Type 2, closed cell, Class A round cross section.

2.1.2 PVC

Polyvinyl chloride (PVC) backing shall be ASTM D 1565, Grade VO 12, open-cell foam, round cross section.

2.1.3 Synthetic Rubber

Synthetic rubber backing shall be ASTM C 509, Option I, Type I preformed rods or tubes.

2.1.4 Neoprene

Neoprene backing shall be ASTM D 1056, closed cell expanded neoprene cord Type 2, Class C, Grade 2C2 and open cell neoprene sponge Type 1, Class C, Grade 1C3.

2.2 BOND-BREAKER

Bond-breaker shall be as recommended by the sealant manufacturer to prevent adhesion of the sealant to backing or to bottom of the joint.

2.3 PRIMER

Primer shall be non-staining type as recommended by sealant manufacturer for the application.

2.4 SEALANT

2.4.1 LATEX

Latex Sealant shall be ASTM C 834.

2.4.2 ELASTOMERIC

Elastomeric sealants shall conform to ASTM C 920 and the following:

a. Polysulfide Sealant: Type M, Grade NS, Class 25, Use NT, M, G, A, and O.

b. Polyurethane sealant: Grade P, Class 25, Use T, M, A, and O.

c. Silicone sealant: Type S, Grade NS, Class 25, Use NT, M, G, A, and O.

2.4.3 ACOUSTICAL

Rubber or polymer-based acoustical sealant shall have a flame spread of 25 or less and a smoke developed rating of 50 or less when tested in accordance with ASTM E 84. Acoustical sealant shall have a consistency of 250 to 310 when tested in accordance with ASTM D 217, and shall remain flexible and adhesive after 500 hours of accelerated weathering as specified in ASTM C 734, and shall be non-staining.

2.4.4 BUTYL

Butyl sealant shall be ASTM C 1085.

2.4.5 PREFORMED

Preformed sealant shall be polybutylene or isoprene-butylene based pressure sensitive weather resistant tape or bead sealant capable of sealing out moisture, air and dust when installed as recommended by the manufacturer. At temperatures from minus 34 to plus 71 degrees C, the sealant shall be non-bleeding and shall have no loss of adhesion.

2.4.5.1 Tape

Tape sealant: cross-section dimensions shall be as required by Section 01050 JOB CONDITIONS.

2.4.5.2 Bead

Bead sealant: cross-section dimensions shall be as required by Section 01050 JOB CONDITIONS.

2.4.5.3 Foam Strip

Foam strip shall be polyurethane foam. Foam strip shall be capable of sealing out moisture, air, and dust when installed and compressed as recommended by the manufacturer. Service temperature shall be minus 40 to plus 135 degrees C. Untreated strips shall be furnished with adhesive to hold them in place. Adhesive shall not stain or bleed into adjacent finishes. Treated strips shall be saturated with butylene waterproofing or impregnated with asphalt.

2.5 SOLVENTS AND CLEANING AGENTS

Solvents, cleaning agents, and accessory materials shall be provided as recommended by the manufacturer.

PART 3 EXECUTION

3.1 GENERAL

3.1.1 Surface Preparation

The surfaces of joints to receive sealant or caulk shall be free of all frost, condensation and moisture. Oil, grease, dirt, chalk, particles of mortar, dust, loose rust, loose mill scale, and other foreign substances shall be removed from surfaces of joints to be in contact with the sealant. Oil and grease shall be removed with solvent and surfaces shall be wiped dry with clean cloths. For surface types not listed below, the sealant manufacturer shall be contacted for specific recommendations.

3.1.2 Concrete and Masonry Surfaces

Where surfaces have been treated with curing compounds, oil, or other such materials, the materials shall be removed by sandblasting or wire brushing. Laitance, efflorescence and loose mortar shall be removed from the joint cavity.

3.1.3 Steel Surfaces

Steel surfaces to be in contact with sealant shall be sandblasted or, if sandblasting would not be practical or would damage adjacent finish work, the metal shall be scraped and wire brushed to remove loose mill scale. Protective coatings on steel surfaces shall be removed by sandblasting or by a solvent that leaves no residue.

3.1.4 Aluminum Surfaces

Aluminum surfaces to be in contact with sealants shall be cleaned of temporary protective coatings. When masking tape is used for a protective cover, the tape and any residual adhesive shall be removed just prior to applying the sealant. Solvents used to remove protective coating shall be as recommended by the manufacturer of the aluminum work and shall be non-staining.

3.1.5 Wood Surfaces

Wood surfaces to be in contact with sealants shall be free of splinters and sawdust or other loose particles.

3.2 APPLICATION

3.2.1 Masking Tape

Masking tape shall be placed on the finish surface on one or both sides of a joint cavity to protect adjacent finish surfaces from primer or sealant smears. Masking tape shall be removed within 10 minutes after joint has been filled and tooled.

3.2.2 Backing

Backing shall be installed to provide the indicated sealant depth. The installation tool shall be shaped to avoid puncturing the backing.

3.2.3 Bond-Breaker

Bond-breaker shall be applied to fully cover the bottom of the joint without contaminating the sides where sealant adhesion is required.

3.2.4 Primer

Primer shall be used on concrete masonry units, wood, or other porous surfaces in accordance with instructions furnished with the sealant. Primer shall be applied to the joint surfaces to be sealed. Surfaces adjacent to joints shall not be primed.

3.2.5 Sealant

Sealant shall be used before expiration of shelf life. Multi-component sealants shall be mixed according to manufacturer's printed instructions. Sealant in guns shall be applied with a nozzle of proper size to fit the width of joint. Joints shall be sealed as detailed in the drawings. Sealant shall be forced into joints with sufficient pressure to expel air and fill the groove solidly. Sealant shall be installed to the indicated depth without displacing the backing. Unless otherwise indicated, specified, or recommended by the manufacturer, the installed sealant shall be dry tooled to produce a uniformly smooth surface free of wrinkles and to ensure full adhesion to the sides of the joint; the use of solvents, soapy water, etc., will not be allowed. Sealants shall be installed free of air pockets, foreign embedded matter, ridges and sags. Sealer shall be applied over the sealant when and as specified by the sealant manufacturer.

3.3 CLEANING

The surfaces adjoining the sealed joints shall be cleaned of smears and other soiling resulting from the sealant application as work progresses.

-- End of Section --

	GENERAL DESCRIPTION	SEALANT TYPE (*)	CHARACTERISTICS
1	Control joints in exterior brick masonry or concrete walls.	Backing X w/ A or C	Colored to match mortar
2	Control joints in foundation concrete walls.	D	
3	Steel Door or Window Frames in brick, masonry or concrete.	A	Paintable
4	Aluminum Door or Window Frames to brick, masonry or concrete.	D	Colored to match Aluminum frame
5	Interior side of Steel Door or Window Frames to GWB.	A	Paintable
6	Interior side of Aluminum Door or Window Frames to GWB.	A	Paintable
7	Joint between masonry and concrete columns or beams.	Backing X w/ D	Colored to match mortar (when exposed)
8	Slip Joints - masonry on concrete beam.	Backing X w/ D	Colored to match mortar (when exposed)
9	Expansion joints in ceramic tile.	D	Colored to match grout
10	Thresholds - marble to ceramic tile.	C	Colored to match grout
11	Thresholds - metal.	C or I	Clear
12	Acoustical sealant, general.	F	Paintable
13	Acoustical sealant in GWB partitions.	F	Paintable
14	Steel column in masonry wall.	Backing X w/ D	
15	Perimeter seal of GWB ceilings.	C or D	White & Paintable
16	Expansion joints in Quarry Tile floors.	C	
17	Pipe sleeve through exterior masonry, concrete or foundation walls.	D	
18	Duct penetration through GWB.	A	Paintable
19			
20			

* Sealant types designated in table shall be used when no indicator is identified on drawings. Sealant types indicated on drawings shall supersede types indicated in table.

** Sealant types designated for through wall penetration applications shall be applied on both side of wall.

A = Latex
B = Polysulfied
C = Polyurethane
D = Silicone
E = Structural Sealant
F = Acoustical Sealant
G = Butyl
H = Performed - tape
I = Performed - Bead
X = Backer Rod
Y =

SECTION 08110

STEEL DOORS AND FRAMES

PART 1 GENERAL

1.1 REFERENCES

The publications listed below form a part of this specification to the extent referenced. The publications are referred to in the text by basic designation only.

AMERICAN SOCIETY FOR TESTING AND MATERIALS (ASTM)

ASTM C 236	(1989; R 1993) Steady-State Thermal Performance of Building Assemblies by Means of a Guarded Hot Box
ASTM C 976	(1990) Thermal Performance of Building Assemblies by Means of a Calibrated Hot Box
ASTM D 2863	(1991) Measuring the Minimum Oxygen Concentration to Support Candle-Like Combustion of Plastics (Oxygen Index)
ASTM E 283	(1991) Determining the Rate of Air Leakage Through Exterior Windows, Curtain Walls, and Doors Under Specified Pressure Differences Across the Specimen

DOOR AND HARDWARE INSTITUTE (DHI)

DHI A115.1G	(1994) Installation Guide for Doors and Hardware

NATIONAL FIRE PROTECTION ASSOCIATION (NFPA)

NFPA 80	(1995) Fire Doors and Windows
NFPA 80A	(1993) Protection of Buildings from Exterior Fire Exposures
NFPA 101	(1997) Safety to Life from Fire in Buildings and Structures
NFPA 252	(1995) Fire Tests of Door Assemblies

STEEL DOOR INSTITUTE (SDOI)

SDOI SDI-100	(1991) Standard Steel Doors and Frames
SDOI SDI-106	(1996) Standard Door Type Nomenclature
SDOI SDI-107	(1984) Hardware on Steel Doors (Reinforcement - Application)

1.2 SUBMITTALS

Government approval is required for submittals with a "GA" designation; submittals having an "FIO" designation are for information only. The following shall be submitted in accordance with Section 01330 SUBMITTAL PROCEDURES:

SD-04 Drawings

Steel Doors and Frames; GA|ED.

Drawings using standard door type nomenclature in accordance with SDOI SDI-106 indicating the location of each door and frame, elevation of each model of door and frame, details of construction, method of assembling sections, location and extent of hardware reinforcement, hardware locations, type and location of anchors for frames, and thicknesses of metal. Drawings shall include catalog cuts or descriptive data for the doors, frames, and weatherstripping including air infiltration data and manufacturers printed instructions.

SD-09 Reports

Fire Rated Doors; FIO;AR.

A letter by a nationally recognized testing laboratory which identifies the product manufacturer, type, and model; certifying that the laboratory has tested a sample assembly in accordance with NFPA 252 and issued a current listing for same.

SD-13 Certificates

Fire Rated Doors; FIO;AR. Thermal Insulated Doors; FIO;AR. Security Doors ; FIO;AR..

a. Certification of Oversized Fire Doors: Certificates of compliance in accordance with the requirements of NFPA 252 for fire doors exceeding the sizes for which label service is available.

b. Certification of Security and Thermal Insulating Doors Rating: Certification or test report for security rating thermal insulated doors shall show compliance with the specified requirements. The certification, or test report, shall list the parameters and the type of hardware and perimeter seals used to achieve the rating.

1.3 DELIVERY AND STORAGE

During shipment, welded unit type frames shall be strapped together in pairs with heads at opposite ends or shall be provided with temporary steel spreaders at the bottom of each frame; and knockdown type frames shall be securely strapped in bundles. Materials shall be delivered to the site in undamaged condition, and stored out of contact with the ground and under a weathertight covering permitting air circulation. Doors and assembled frames shall be stored in an upright position in accordance with DHI A115.1G. Abraded, scarred, or rusty areas shall be cleaned and touched up with matching finishes.

1.4 WARRANTY

Manufacturer's standard performance guarantees or warranties that extend

beyond a 1 year period shall be provided.

PART 2 PRODUCTS

2.1 DOORS AND FRAMES

Doors and frames shall be factory fabricated in accordance with SDOI SDI-100 and the additional requirements specified herein. Door grade shall be standard (Grade I) and extra heavy duty (Grade III) unless otherwise indicated on the door and door frame schedules. Exterior doors and frames shall be designation A40 galvanized. Indicated interior doors and frames shall be designation A40 galvanized. Doors and frames shall be prepared to receive hardware conforming to the templates and information provided under Section 08700 BUILDERS' HARDWARE. Doors and frames shall be reinforced, drilled, and tapped to receive mortised hinges, locks, latches, and flush bolts as required. Doors and frames shall be reinforced for surface applied hardware. Frames shall be knockdown type and welded type located as shown. Door frames shall be furnished with a minimum of three jamb anchors and one floor anchor per jamb. Anchors shall be not less than 1.2 mm (18 gauge) steel or 4.5 mm (7 gauge) diameter wire. For wall conditions that do not allow the use of a floor anchor, an additional jamb anchor shall be provided. Rubber silencers shall be furnished for installation into factory predrilled holes in door frames; adhesively applied silencers are not acceptable. Where frames are installed in plaster or masonry walls, plaster guards shall be provided on door frames at hinges and strikes. Full glass doors shall conform to SDOI SDI-100, Model 3, and shall include provisions for glazing. Reinforcing of door assemblies for closers and other required hardware shall be in accordance with SDOI SDI-100and the conditions of the fire door assembly listing when applicable. Exterior doors shall have top edges closed flush and sealed against water penetration.

2.2 FIRE RATED DOORS

Fire rated door assemblies shall bear the listing identification label of a nationally recognized testing laboratory qualified to perform tests of fire door assemblies in accordance with NFPA 252 and having a listing for the tested assemblies. The fire resistance rating shall be as shown. Doors exceeding the sizes for which listing label service is offered shall be in accordance with NFPA 252. Listing identification labels shall be constructed and permanently applied by a method which results in their destruction should they be removed.

2.3 THERMAL INSULATED DOORS

The interior of thermal insulated doors shall be completely filled with rigid plastic foam permanently bonded to each face panel. The thermal conductance (U-value) through the door shall not exceed 2.33 W/sq m times K (0.41 btu/hr times sq f times f) when tested as an operational assembly in accordance with ASTM C 236 or ASTM C 976. Doors with cellular plastic cores shall have a minimum oxygen index rating of 22 percent when tested in accordance with ASTM D 2863.

2.4 WEATHERSTRIPPING

Unless otherwise specified in Section 08700 BUILDERS' HARDWARE, weatherstripping shall be as follows: Weatherstripping for head and jamb shall be manufacturer's standard elastomeric type of synthetic rubber, vinyl, or neoprene and shall be installed at the factory or on the jobsite

in accordance with the door frame manufacturer's recommendations. Weatherstripping for bottom of doors shall be as shown. Air leakage rate of weatherstripping shall not exceed 0.31 l/s per linear meter (0.20 cfm per linear foot) of crack when tested in accordance with ASTM E 283 at standard test conditions.

2.5 LOUVERS

Where indicated, doors shall be provided with louver sections. Louvers shall be sightproof type inserted into the door. Pierced louvers shall not be used on exterior doors. Inserted louvers shall be [stationary] [adjustable]. Louvers shall be nonremovable from the outside of exterior doors or the unsecure side of interior doors. Insect screens shall be a removable type with 18 by 16 mesh aluminum or bronze cloth. Full louver doors shall be in accordance with SDOI SDI-100, Grade III, Model 3.

2.6 GLAZING

Glazing shall be as specified in Section 08810 GLASS AND GLAZING. Removable glazing beads shall be screw-on or snap-on type.

2.7 FACTORY FINISH

Doors and frames shall be phosphatized and primed with standard factory primer system. Color shall be in accordance with the COLOR SCHEDULE.

PART 3 EXECUTION

3.1 INSTALLATION

Installation shall be in accordance with DHI A115.1G. Preparation for surface applied hardware shall be in accordance with SDOI SDI-107. Rubber silencers shall be installed in door frames after finish painting has been completed; adhesively applied silencers are not acceptable. Weatherstripping shall be installed at exterior door openings to provide a weathertight installation. Installation and operational characteristics of fire doors shall be in accordance with NFPA 80, NFPA 80A and NFPA 101. Hollow metal door frames shall be solid grouted in masonry walls or as shown.

3.1.1 Thermal Insulated Doors

Hardware and perimeter seals shall be adjusted for proper operation. Doors shall be sealed weathertight after installation of hardware and shall be in accordance with Section 07920 JOINT SEALING.

3.1.2 Security Doors

Door frames shall be rigidly anchored in place and provided with antispread space filler reinforcements to prevent disengagement of the lock bolt by prying or jacking of the frame. Jambs shall be filled solid with concrete grout.

3.1.3 Sound Rated Doors

Sound rated doors shall be installed in accordance with the manufacturer's printed instructions. Hardware and perimeter seals shall be adjusted for proper operation.

3.2 FIELD PAINTED FINISH

Steel doors and frames shall be field painted in accordance with Section 09900 PAINTING, GENERAL. Weatherstrips shall be protected from paint. Finish shall be free of scratches or other blemishes. Color shall be in accordance with the COLOR SCHEDULE.

-- End of Section --

SECTION 08120

ALUMINUM DOORS AND FRAMES

PART 1 GENERAL

1.1 REFERENCES

The publications listed below form a part of this specification to the extent referenced. The publications are referred to in the text by basic designation only.

AMERICAN ARCHITECTURAL MANUFACTURERS ASSOCIATION (AAMA)

AAMA 605.2	(1992; Addenda Jan 1995) Voluntary Specification for High Performance Organic Coatings on Architectural Aluminum Extrusions and Panels
AAMA 1503.1	(1988) Voluntary Test Method for Thermal Transmittance and Condensation Resistance of Windows, Doors and Glazed Wall Sections

AMERICAN SOCIETY FOR TESTING AND MATERIALS (ASTM)

ASTM B 209	(1996) Aluminum and Aluminum-Alloy Sheet and Plate
ASTM B 221	(1996) Aluminum and Aluminum-Alloy Extruded Bars, Rods, Wire, Shapes, and Tubes
ASTM E 283	(1991) Determining the Rate of Air Leakage Through Exterior Windows, Curtain Walls, and Doors Under Specified Pressure Differences Across the Specimen
ASTM E 330	(1990) Structural Performance of Exterior Windows, Curtain Walls, and Doors by Uniform Static Air Pressure Difference
ASTM E 331	(1996) Water Penetration of Exterior Windows, Curtain Walls, and Doors by Uniform Static Air Pressure Difference

1.2 SYSTEM DESCRIPTION

Swing-type aluminum doors and frames, of size and design shown on the drawings, shall be provided at the locations indicated. Doors shall be furnished complete with frames, subframes, transoms, adjoining sidelights, adjoining window wall, trim, and other accessories indicated and specified.

1.3 PERFORMANCE REQUIREMENTS

1.3.1 Wind Load Performance

Doors and frames shall be of sufficient strength to withstand a design wind

load of 1440 Pa (30 pounds per square foot) of supported area with a deflection of not more than 1/175 times the length of the member. Doors shall be tested in accordance with ASTM E 330 at a pressure not less than 1.5 times the design load.

1.3.2 Water Penetration Performance

Frames and fixed areas, and non-handicap complying doors shall have no water penetration when tested in accordance with ASTM E 331 at a pressure of 383 Pa .

1.4 SUBMITTALS

Government approval is required for submittals with a "GA" designation; submittals having an "FIO" designation are for information only. The following shall be submitted in accordance with Section 01330 SUBMITTAL PROCEDURES:

SD-01 Data
Aluminum Doors and Frames; GA|ED.

Manufacturer's descriptive data and catalog cuts including air-infiltration data.

SD-04 Drawings

Aluminum Doors and Frames; GA|ED.

A schedule showing the location of each door shall be included with the drawings. Drawings showing elevations of each door and frame type, details and method of anchorage, details of construction, location and installation of hardware, shape and thickness of materials, and details of joints and connections.

SD-06 Instructions

Installation; FIO;AR. Cleaning; FIO;AR.

Manufacturer's installation instructions and cleaning instructions.

SD-09 Reports

Full-Glazed and Flush Doors; GA|AR.

For full-glazed and flush doors, certified test reports from an independent testing laboratory, stating that doors are identical in design, materials, and construction to a door that has been tested and meets all test and specified requirements.

SD-14 Samples

Finishes; GA|ED.

Samples of the painted finish.

1.5 DELIVERY AND STORAGE

Materials delivered to the jobsite shall be inspected for damage, and shall be unloaded with a minimum of handling. Storage shall be in a dry location

with adequate ventilation, free from dust, water, and other contaminants, and which permits easy access for inspecting and handling. Materials shall be neatly stored on the floor, properly stacked on nonabsorptive strips or wood platforms. Doors and frames shall not be covered with tarps, polyethylene film, or similar coverings.

1.6 WARRANTY

Manufacturer's standard performance guarantees or warranties that extend beyond a one-year period shall be provided.

PART 2 PRODUCTS

2.1 ALUMINUM DOORS AND FRAMES

Extrusions shall comply with ASTM B 221, Alloy 6063-T5 except alloy used for anodized color coatings shall be required to produce the specified color. Aluminum sheets and strips shall comply with ASTM B 209, alloy and temper best suited for the purpose. Fasteners shall be hard aluminum or stainless steel.

2.1.1 Finishes

Finish shall be painted. Painted finish shall be manufacturers standard fluoropolymer in accordance with the requirements of AAMA 605.2. Clear topcoats if required shall be applied at 0.3 to 0.5 mils. Finish shall be free of scratches and other blemishes. Color shall be in accordance with the COLOR SCHEDULE.

2.1.2 Welding and Fastening

Where possible, welds shall be located on unexposed surfaces. Welds required on exposed surfaces shall be smoothly dressed. Welding shall produce a uniform texture and color in the finished work, free of flux and spatter. Exposed screws or bolts will be permitted only at inconspicuous locations and shall have heads countersunk.

2.1.3 Anchors

Anchors shall be stainless steel or steel with a hot-dipped galvanized finish. Anchors of the sizes and shapes required shall be provided for securing aluminum frames to adjacent construction. Anchors shall be placed near top and bottom of each jamb and at intermediate points not more than 625 mm apart. Transom bars shall be anchored at ends, and mullions shall be anchored at head and sill. Where necessary, vertical mullion reinforcement shall be of sufficient length to extend up to the overhead structural slab or framing and be securely attached thereto. The bottom of each frame shall be anchored to the rough floor construction with 2.4 mm (3/32 inch) thick stainless steel angle clips secured to the back of each jamb and to floor construction. Stainless steel bolts and expansion rivets shall be used for fastening clip anchors. Freestanding door frames shall be reinforced and securely anchored to floor construction.

2.1.4 Provisions For Hardware

Hardware for aluminum doors is specified in Section 08700 BUILDERS' HARDWARE. Doors and frames shall be cut, reinforced, drilled, and tapped at the factory to receive template hardware. Reinforcement shall be provided in the core of doors as required to receive locks, door closers,

and other hardware. Doors to receive surface applied hardware shall be reinforced as required.

2.1.5 Provisions For Glazing

Glazing shall be as specified in Section 08810 GLASS AND GLAZING. Metal glazing beads, vinyl inserts, and glazing gaskets shall be provided for securing glass. Glass stops shall be tamperproof on exterior side.

2.1.6 Weatherstripping

Weatherstripping shall be continuous silicone-treated wool pile type, or a type recommended by the door manufacturer, and shall be provided on head and jamb of exterior doors. Weatherstripping for bottom of doors shall be as shown. Weatherstripping shall be easily replaced without special tools, and shall be adjustable at meeting stiles of pairs of doors. Air leakage rate of weatherstripping shall not exceed 0.775 L/s per lineal meter (0.5 cfm per lineal foot) of crack when tested in accordance with ASTM E 283 at standard test conditions.

2.2 FABRICATION OF ALUMINUM FRAMES

Frames shall be double-glazed and shall have a minimum condensation resistance factor of 75 in accordance with AAMA 1503.1. Frames shall be fabricated of extruded aluminum shapes to contours as shown on the drawings. Shapes shown are representations of design, function, and required profile. Dimensions shown are minimum. Shapes of equivalent design may be submitted, subject to approval of samples. Minimum metal wall thickness shall be 2.29 mm, except glazing beads, moldings, and trim shall be not less than 1.27 mm. Frames that are to receive glass shall have removable snap-on glass stops and glazing beads. Joints in frame members shall be milled to a hairline watertight fit, reinforced, and secured mechanically by steel clip arrangement or by screw spline attachment.

2.3 FABRICATION OF ALUMINUM DOORS

2.3.1 Sizes, Clearances, and Edge Treatment

Doors shall be not less than 44.4 mm thick. Clearances shall be 1.6 mm at hinge stiles, 3 mm at lock stiles and top rails, and 5 mm at floors and thresholds. Single-acting doors shall be beveled 3 mm at lock and meeting stile edges. Double-acting doors shall have rounded edges at hinge stile, lock stile, and meeting stile edges.

2.3.1.1 Full-Glazed Stile and Rail Doors

Doors shall have medium stiles and rails as shown, and shall be fabricated from extruded aluminum hollow seamless tubes or from a combination of open-shaped members interlocked or welded together. Doors shall be double-glazed and shall have a minimum condensation resistance factor of 75 in accordance with AAMA 1503.1. Top and bottom rail shall be fastened together by means of welding or by 10 mm diameter cadmium-plated tensioned steel tie rods. An adjustable mechanism shall be provided in the top rail of narrow stile doors to allow for minor clearance adjustments after installation. Extruded aluminum snap-in glazing beads shall be provided on interior side of doors. Extruded aluminum theft-proof snap-in glazing beads or fixed glazing beads shall be provided on exterior or security side of doors. Glazing beads shall have vinyl insert glazing gaskets, designed

to receive glass of thickness required. Glass is specified in Section 08810 GLASS AND GLAZING.

PART 3 EXECUTION

3.1 INSTALLATION OF DOORS, FRAMES, AND ACCESSORIES

3.1.1 Protection of Aluminum

Aluminum shall not be used where it will be in contact with copper or where it will contact water which flows over copper surfaces. Aluminum that will be in contact with wet or pressure-treated wood, mortar, concrete, masonry, or ferrous metals shall be protected against galvanic or corrosive action by one of the following methods.

3.1.1.1 Paint

Aluminum surfaces to be protected shall be solvent cleaned and given a coat of zinc-molybdate primer and one coat of aluminum paint.

3.1.1.2 Nonabsorptive Tape or Gasket

Nonabsorptive tape or gasket shall be placed between the adjoining surfaces and shall be cemented to the aluminum surface using a cement compatible with aluminum.

3.1.2 Installation

Frames and framing members shall be accurately set in position to receive doors, transoms, and adjoining sidelights. Frames shall be plumb, square, level, and in alignment, and securely anchored to adjacent construction. Metal-to-metal joints between framing members shall be sealed as specified in Section 07920 JOINT SEALING. Doors shall be accurately hung with proper clearances, and adjusted to operate properly. Protective coverings if provided shall be removed and the doors and frames shall be thoroughly cleaned.

-- End of Section --

SECTION 08210

WOOD DOORS

PART 1 GENERAL

1.1 REFERENCES

The publications listed below form a part of this specification to the extent referenced. The publications are referred to in the text by basic designation only.

ARCHITECTURAL WOODWORK INSTITUTE (AWI)

AWI-02	(1994) Architectural Woodwork Quality Standards, Guide Specifications and Quality Certification Program

NATIONAL FIRE PROTECTION ASSOCIATION (NFPA)

NFPA 80	(1995) Fire Doors and Windows
NFPA 101	(1997) Safety to Life from Fire in Buildings and Structures
NFPA 252	(1995) Fire Tests of Door Assemblies

NATIONAL WOOD WINDOW & DOOR ASSOCIATION (NWWDA)

NWWDA I.S. 1-A	(1993) Architectural Wood Flush Doors

1.2 GENERAL REQUIREMENTS

1.2.1 Standard Products

Doors shall be of the type, size, and design indicated on the drawings, and shall be the standard products of manufacturers regularly engaged in the manufacture of wood doors.

1.2.2 Marking

Each door shall bear a stamp, brand, or other identifying mark indicating quality and construction of the door. The identifying mark or a separate certification shall include identification of the standard on which construction of the door is based, identity of the manufacturing plant, identification of the standard under which preservative treatment, if used, was made, and identification of the doors having a Type I glue bond.

1.3 SUBMITTALS

Government approval is required for submittals with a "GA" designation; submittals having an "FIO" designation are for information only. The following shall be submitted in accordance with Section 01330 SUBMITTAL PROCEDURES:

SD-04 Drawings

Wood Doors; GA|ED.

Drawings indicating the location of each door, elevation of each type of door, details of construction, marks to be used to identify the doors, and location and extent of hardware blocking. Drawings shall include catalog cuts or descriptive data for doors, weatherstripping, flashing, and thresholds to be used.

SD-06 Instructions

Fire Doors; FIO;AR.

Manufacturers preprinted installation and touch-up instructions.

SD-13 Certificates

Fire Rated Doors; GA|AR. Adhesives; GA|AR.

Certificates for oversize fire doors and/or door/frame assemblies stating that the doors are identical in design, materials, and construction to a door that has been tested and meets the requirements for the class indicated. Certificate stating that adhesives used for proposed doors do not contain any formaldehyde.

SD-14 Samples

Factory Coated Natural Finish; GA|ED.

Threesamples of factory applied natural finish on wood veneer, as indicated on the COLOR SCHEDULE.

1.4 STORAGE

Doors shall be stored in fully covered areas and protected from damage and from extremes in temperature and humidity. Doors shall be stored on supports to prevent warping or twisting, and to provide ventilation. Factory cartons or wrappers shall be kept intact until installation.

1.5 HARDWARE

Hardware, including weatherstripping and thresholds, is specified in Section 08700 BUILDERS' HARDWARE.

1.6 GLAZING

Glazing is specified in Section 08810 GLASS AND GLAZING.

1.7 WARRANTY

Manufacturer's standard performance guarantees or warranties that extend beyond a 1 year period shall be provided.

PART 2 PRODUCTS

2.1 GENERAL FABRICATION REQUIREMENTS

2.1.1 Edge Sealing

Wood end-grain exposed at edges of doors shall be sealed prior to shipment.

2.1.2 Adhesives

Adhesives shall be in accordance with NWWDA I.S. 1-A, requirements for Type II Bond Doors (water-repellent) for interior doors. Adhesive for doors to receive a transparent finish shall be nonstaining. Adhesives shall contain no formaldehydes.

2.1.3 Prefitting

Doors shall be furnished prefitted or unfitted at the option of the Contractor.

2.2 FLUSH DOORS

Flush doors shall be solid core and shall conform to NWWDA I.S. 1-A, except for the one year acclimatization requirement in paragraph T-2, which shall not apply. Wood doors shall be 5-ply construction with faces, stiles, and rails bonded to the cores.

2.2.1 Core Construction

2.2.1.1 Solid Cores

Door construction shall be glued wood block core with vertical and horizontal edges bonded to the core.

2.2.2 Face Panels

2.2.2.1 Natural Finished Wood Veneer Doors

Veneer doors to receive natural finish shall be Premium Grade, rift-cut book matchedred oak veneer in accordance with NWWDA I.S. 1-A. Vertical stile strips shall be selected to provide edges of the same species and/or color as the face veneer. Door finish shall be in accordance with paragraph FINISHING.

2.2.2.2 Painted Wood Veneer Doors

Veneer doors to receive paint finish shall be Economy Grade with medium density overlay in accordance with NWWDA I.S. 1-A. Door finish shall be in accordance with paragraph FIELD FINISHING.

2.3 FIRE RATED DOORS

Fire rated door assemblies shall bear the listing identification label of a nationally recognized testing laboratory qualified to perform tests of fire door assemblies in accordance with NFPA 252 and having a listing for the tested assemblies. The specific time interval rating on the labels shall be as shown. Door assemblies shall be in accordance with NFPA 80. Listing identification on labels shall be constructed and permanently applied by a method which results in their destruction should they be removed. Fire rated doors shall be mineral core 45, 60, or 90 minute rating as shown.

2.3.1 Reinforcement Blocking

Fire rated doors shall be provided, as required, with hardware reinforcement blocking, and top, bottom, and intermediate rail blocking.

Lock blocks shall be manufacturer's standard. Reinforcement blocking shall be in compliance with the manufacturer's labeling requirements. Reinforcement blocking shall not be of mineral material.

2.3.2 Stile Edges

Composite fire rated doors shall be provided with vertical stile edges that do not contain fire retardant salts. Vertical stiles shall be of the same species and/or color as the face veneer.

2.4 MOULDING AND EDGING

Moulding and edging shall be as shown. Wood species for transparent finished doors shall be compatible with veneer.

2.5 INSERT LOUVERS

Where indicated, doors shall be provided with sightproof insert louvers. Louvers shall be stationary or adjustable as shown. Blades shall be welded or tenoned to the frame and the entire assembly fastened to the door with metal or wood moldings on both sides as shown. The frame shall be nonremovable from the outside of the door. Louver and frame shall be painted color shown in the COLOR SCHEDULE.

2.6 FINISHING

2.6.1 Factory Coated Natural Finish

Doors indicated to receive factory coated natural finish shall be given a transparent finish conforming to AWI-02, Section 1500, Premium Grade, open grain effect. Finish shall be AWI factory finish system Number TR3 or TR4. Color of the natural finish shall be in accordance with the COLOR SCHEDULE. Edges of unfitted doors shall be field finished after fitting to the frames.

PART 3 EXECUTION

3.1 INSTALLATION OF DOORS

3.1.1 General Use Doors

Doors shall be fit, hung, and trimmed as required. Door shall have a clearance of 3 mm at the sides and top and shall have a bottom clearance of 6 mm over thresholds and 13 mm at other locations unless otherwise shown. The lock edge or both edges of doors shall be beveled at the rate of 3 mm in 50 mm. Cuts made on the job shall be sealed immediately after cutting, using a clear varnish or sealer. Bottom of doors shall be undercut to allow clear door swing over carpeted areas. Vertical edges of doors which have not been rounded or beveled at the factory shall be eased when the doors are installed.

3.1.2 Fire Doors

Installation, hardware, and operational characteristics shall conform to NFPA 80 and NFPA 101 and shall be in strict conformance with the manufacturer's printed instructions. Properly sized pilot holes shall be drilled for screws in door edges. Factory applied labels shall remain intact where installed. Labeled hinge stile edge and top edge of door shall not be trimmed. Lockstile edge and bottom edge may be trimmed only

to the extent recommended by the door manufacturer.

3.2 FIELD FINISHING

Doors to receive field finishing, whether paint or natural finish, shall be factory primed or sealed, as required, and then shall be finished in accordance with Section 09900 PAINTING, GENERAL. Factory applied sealer shall not prevent doors from accepting field stain and finish. Color shall be in accordance with the COLOR SCHEDULE. Field touch-up of factory finishes shall be in accordance with manufacturers instructions.

-- End of Section --

SECTION 08330

OVERHEAD ROLLING DOORS

PART 1 GENERAL

1.1 REFERENCES

The publications listed below form a part of this specification to the extent referenced. The publications are referred to in the text by basic designation only.

AMERICAN SOCIETY FOR TESTING AND MATERIALS (ASTM)

ASTM A 653	(1996) Steel Sheet, Zinc-Coated (Galvanized) or Zinc-Iron Alloy-Coated (Galvannealed) by the Hot-Dip process
ASTM E 84	(1996a) Surface Burning Characteristics of Building Materials

AMERICAN SOCIETY OF HEATING, REFRIGERATING, AND AIR-CONDITIONING ENGINEERS (ASHRAE)

ASHRAE-03	(1993) Handbook, Fundamentals I-P Edition

NATIONAL ELECTRICAL MANUFACTURERS ASSOCIATION (NEMA)

NEMA ICS 2	(1993) Industrial Control and Systems Controllers, Contactors, and Overload Relays Rated Not More Than 2,000 Volts AC or 750 Volts DC
NEMA ICS 6	(1993) Industrial Control and Systems Enclosures
NEMA MG 1	(1993; Rev 1, Rev 2, Rev 3) Motors and Generators

NATIONAL FIRE PROTECTION ASSOCIATION (NFPA)

NFPA 70	(1996) National Electrical Code

1.2 DESCRIPTION

Overhead rolling doors shall be spring counterbalanced, rolling type, with interlocking slats, complete with guides, fastenings, hood, brackets, and operating mechanisms, and shall be designed for use on openings as indicated. Each door shall be provided with a permanent label showing the manufacturer's name and address and the model/serial number of the door.

1.2.1 Wind Load Requirements

Doors and components shall be designed to withstand the minimum design wind

load of 1200 Pa. Doors shall be constructed to sustain a superimposed load, both inward and outward, equal to 1-1/2 times the minimum design wind load. The door shall support the superimposed loads for a minimum period of 10 seconds without evidence of serious damage and shall be operable after conclusion of the tests. Test data showing compliance with design windload requirements for the door design tested in accordance with a uniform static load equal to 1-1/2 times the minimum design windload, shall be provided. The uniform static load test specimen shall be supported using guides, endlocks, and windlocks as required for project installation. Recovery shall be at least 3/4 of the maximum deflection within 24 hours after the test load is removed.

1.2.2 Operational Cycle Life

All portions of the door and door operating mechanism that are subject to movement, wear, or stress fatigue shall be designed to operate through a minimum number of 20,000 cycles. One complete cycle of door operation is defined as when the door is in the closed position, moves to the full open position, and returns to the closed position.

1.3 SUBMITTALS

Government approval is required for submittals with a "GA" designation; submittals having an "FIO" designation are for information only. The following shall be submitted in accordance with Section 01330 SUBMITTAL PROCEDURES:

SD-01 Data

Overhead Rolling Door Unit; GA|ED.

Manufacturer's catalog data, test data, and summary of forces and loads on the walls/jambs.

SD-04 Drawings

Overhead Rolling Door Unit; GA|ED.

Drawings showing the location of each door including schedules. Drawings shall include elevations of each door type, details and method of anchorage, details of construction, location and installation of hardware, shape and thickness of materials, details of joints and connections, and details of guides, power operators, controls, and other fittings.

SD-06 Instructions

Overhead Rolling Door Unit; FIO;AR.

Manufacturer's preprinted installation instructions.

SD-19 Operation and Maintenance Manuals

Operation Manual; FIO;AR.

Maintenance and Repair Manual ; FIO;AR.

Six copies of the system operation manual and system maintenance and repair manual for each type of door and control system.

1.4 DELIVERY AND STORAGE

Doors shall be delivered to the jobsite wrapped in a protective covering with the brands and names clearly marked thereon. Doors shall be stored in a dry location that is adequately ventilated and free from dirt and dust, water, and other contaminants, and in a manner that permits easy access for inspection and handling.

1.5 WARRANTY

Manufacturer's standard performance guarantees or warranties that extend beyond a 1-year period shall be provided.

1.6 OPERATION AND MAINTENANCE MANUALS

Operating instructions outlining the step-by-step procedures required for motorized door and shutter operation for the overhead rolling door unit shall be provided. The instructions shall include the manufacturer's name, model number, service manual, parts list, and brief description of all equipment and their basic operating features. Maintenance instructions listing routine maintenance procedures, possible breakdowns and repairs, troubleshooting guides, and simplified diagrams for the equipment as installed shall be provided. A complete list of parts and supplies, source of supply, and a list of the high mortality maintenance parts shall be provided.

PART 2 PRODUCTS

2.1 OVERHEAD ROLLING DOORS

Doors shall be surface-mounted type with guides at jambs set back a sufficient distance to clear the opening. Exterior doors shall be mounted on interior side of walls.

2.1.1 Curtains

The curtains shall roll up on a barrel supported at the head of opening on brackets, and shall be balanced by helical torsion springs. Steel slats for doors less than 4.5 m wide shall be minimum bare metal thickness of 0.85 mm.. Steel slats for doors from 4.5 m to 6.3 m wide shall be minimum bare metal thickness of 1.0 mm. . Slats shall be of the minimum bare metal decimal thickness required for the width indicated and the wind pressure specified above.

2.1.1.1 Insulated Curtains

The slat system shall supply a minimum R-value of 4 when calculated in accordance with ASHRAE-03. Slats shall be of the flat type as standard with the manufacturer. Slats shall consist of a urethane core not less than 17 mm thick, completely enclosed within metal facings. Exterior face of slats shall be gauge as specified for curtains. Interior face shall be not lighter than 0.70 mm. The insulated slat assembly shall have a flame spread rating of not more than 25 and a smoke development factor of not more than 50 when tested in accordance with ASTM E 84.

2.1.2 Endlocks and Windlocks

The ends of each alternate slat for interior doors shall have steel endlocks of manufacturer's stock design. Endlocks shall be provided in

accordance with manufacturer's listing on fire doors when required by test results performed by the code listing agency. In addition to endlocks, non-rated exterior doors shall have the manufacturer's standard windlocks as required to withstand the wind load. Windlocks shall prevent the curtain from leaving guides because of deflection from specified wind pressure.

2.1.3 Bottom Bar

The curtain shall have a standard bottom bar consisting of two hot-dip galvanized steel angles for steel doors. A sensing edge shall be attached to the bottom bar of doors that are electric-power operated.

2.1.4 Guides

Guides shall be steel structural shapes or formed steel shapes, of a size and depth to provide proper clearance for operation and resistance under the design windload. Guides shall be attached to adjoining construction with fasteners recommended by the manufacturer. Spacing of fasteners shall be as required to meet the minimum design windload. Doors and guides in hazardous areas shall have static grounding.

2.1.5 Barrel

The barrel shall be steel pipe or commercial welded steel tubing of proper diameter for the size of curtain. Deflection shall not exceed 2.5 mm per meter of span. Ends of the barrel shall be closed with metal plugs, machined to fit the pipe. Aluminum plugs are acceptable on non-fire door barrels.

2.1.6 Springs

Oil tempered helical steel counter-balance torsion springs shall be installed within the barrel and shall be capable of producing sufficient torque to assure easy operation of the door curtain. Access shall be provided for spring tension adjustment from outside of the bracket without removing the hood.

2.1.7 Brackets

Brackets shall be of steel plates to close the ends of the roller-shaft housing, and to provide mounting surfaces for the hood. An operation bracket hub and shaft plugs shall have sealed prelubricated ball bearings.

2.1.8 Hoods

Hoods shall be steel with minimum bare metal thickness of 0.70 mm formed to fit contour of the end brackets, and shall be reinforced with steel rods, rolled beads, or flanges at top and bottom edges. Multiple segment and single piece hoods shall be provided with support brackets of the manufacturer's standard design as required for adequate support.

2.1.9 Weatherstripping

Exterior doors shall be fully weatherstripped. A compressible and replaceable weather seal shall be attached to the bottom bar. Weather seal at door guides shall be continuous vinyl or neoprene, bulb or leaf type, or shall be nylon-brush type. A weather baffle shall be provided at the lintel or inside the hood. Weatherstripping shall be easily replaced

without special tools.

2.1.10 Operation

Doors shall be operated by means of electric power with auxiliary chain hoist. Equipment shall be designed and manufactured for usage in non-hazardous areas.

2.1.10.1 Electric Power Operator With Auxiliary Chain Hoist Operation

Electric power operators shall be heavy-duty industrial type. The unit shall operate the door through the operational cycle life specified. The electric power operator shall be complete with electric motor, auxiliary operation, necessary means of reduction, brake, mounting brackets, push button controls, limit switches, magnetic reversing starter, and all other accessories necessary to operate components specified in other paragraphs of this section. The operator shall be so designed that the motor may be removed without disturbing the limit-switches settings and without affecting the emergency chain operator. Doors shall be provided with an auxiliary operator for immediate emergency manual operation of the door in case of electrical failure. Auxiliary operation shall be by means of galvanized endless chain extending to within 900 mm of the floor. The emergency manual operating mechanism shall be so arranged that it may be operated from the floor without affecting the settings of the limit switches. A mechanical device shall be included that will disconnect the motor from the drive operating mechanism when the auxiliary operator is used. Where control voltages differ from motor voltage, a control voltage transformer shall be provided in and as part of the electric power operator system. Control voltage shall not exceed 120 volts.

a. Motors: Drive motors shall conform to NEMA MG 1, shall be high-starting torque, reversible type, and shall be of sufficient wattage and torque output to move the door in either direction from any position at a speed range of 0.23 m per second (6 to 8 inches per second) without exceeding the rated capacity. Motors shall be suitable for operation on 120 volts, 60 hertz, single phase current and shall be suitable for across-the-line starting. Motors shall be designed to operate at full capacity over a supply voltage variation of plus or minus 10 percent of the motor voltage rating. Motors shall be provided with overload protection.

b. Controls: Control equipment shall conform to NEMA ICS 2. Enclosures shall conform to NEMA ICS 6, Type 12 (industrial use), Type 7 or 9 in hazardous locations, in accordance with NFPA 70. Exterior control stations shall be weatherproof key-operated type with corrosion-resistant cast-metal cover. Each control station shall be of the three position button or switch type, marked "OPEN," "CLOSE," and "STOP." The "OPEN" and "STOP" controls shall be of the momentary contact type with seal-in contact. The "CLOSE" control shall be of the momentary contact type. When the door is in motion and the "STOP" control is pressed, the door shall stop instantly and remain in the stop position; from the stop position, the door shall be operable in either direction by the "OPEN" or "CLOSE" controls. Controls shall be of the full-guarded type to prevent accidental operation. Readily adjustable limit switches shall be provided to automatically stop the doors at their fully open and closed positions.

c. Sensing Edge Device: The bottom edge of electric power operated doors shall have an electric sensing edge for non-hazardous areas

that will reverse the door movement upon contact with an obstruction and cause the door to return to its full open position. The sensing edge shall not substitute for a limit switch. Exterior doors shall be provided with a combination compressible weather seal and sensing edge.

d. Electrical Work: Conduit and wiring necessary for proper operation shall be provided under Section 16415 ELECTRICAL WORK, INTERIOR. Flexible connections between doors and fixed supports shall be made with flexible type SJO cable, except in hazardous locations where wiring shall conform to NFPA 70, as appropriate. The cable shall have a spring-loaded automatic take up reel or a coil cord equivalent device.

2.1.11 Locking

Locking for motor operated doors shall consist of self-locking gearing with chain lock for emergency hand chain.

2.1.12 Finish

Steel slats and hoods shall be hot-dip galvanized G60 in accordance with ASTM A 653, and shall be treated for paint adhesion and shall receive a factory baked-on prime coat for field finishing. The paint system shall withstand a minimum of 1500 hours without blistering, bubbling, or rust. Surfaces other than slats, hood, and faying surfaces shall be cleaned and treated to assure maximum paint adherence and shall be given a factory dip or spray coat of rust inhibitive metallic oxide or synthetic resin primer. Color shall be in accordance with the COLOR SCHEDULE as indicated on the drawings.

PART 3 EXECUTION

3.1 INSTALLATION

Doors shall be installed in accordance with approved detail drawings and manufacturer's instructions. Anchors and inserts for guides, brackets, motors, switches, hardware, and other accessories shall be accurately located. Upon completion, doors shall be free from warp, twist, or distortion. Doors shall be lubricated, properly adjusted, and demonstrated to operate freely.

3.2 FIELD PAINTED FINISH

Steel doors and frames shall be field painted in accordance with Section 09900 PAINTING, GENERAL. Weatherstrips shall be protected from paint. Finish shall be free of scratches or other blemishes. Color shall be in accordance with the COLOR SCHEDULE.

-- End of Section --

SECTION 08520

ALUMINUM WINDOWS

PART 1 GENERAL

1.1 REFERENCES

The publications listed below form a part of this specification to the extent referenced. The publications are referred to in the text by basic designation only.

AMERICAN ARCHITECTURAL MANUFACTURERS ASSOCIATION (AAMA)

AAMA 101	(1993) Voluntary Specifications for Aluminum and Poly(Vinyl Chloride) (PVC) Prime Windows and Glass Doors
AAMA 605.2	(1992; Addenda Feb 1994) Voluntary Specification for High Performance Organic Coatings on Architectural Aluminum Extrusions and Panels
AAMA 1503.1	(1988) Voluntary Test Method for Thermal Transmittance and Condensation Resistance of Windows, Doors and Glazed Wall Sections

AMERICAN SOCIETY FOR TESTING AND MATERIALS (ASTM)

ASTM E 283	(1991) Determining the Rate of Air Leakage Through Exterior Windows, Curtain Walls, and Doors Under Specified Pressure Differences Across the Specimen
ASTM E 330	(1990) Structural Performance of Exterior Windows, Curtain Walls, and Doors by Uniform Static Air Pressure Difference
ASTM E 547	(1993) Water Penetration of Exterior Windows, Curtain Walls, and Doors by Cyclic Static Air Pressure Differential

AMERICAN SOCIETY OF MECHANICAL ENGINEERS (ASME)

ASME A39.1	(1991; A39.1a) Safety Requirements for Window Cleaning

1.2 WINDOW PERFORMANCE

Aluminum windows shall be designed to meet the following performance requirements. Testing requirements shall be performed by an independent testing laboratory or agency.

1.2.1 Structural Performance

Structural test pressures on window units shall be for positive load

(inward) and negative load (outward) in accordance with ASTM E 330. After testing, there shall be no glass breakage, permanent damage to fasteners, hardware parts, support arms or actuating mechanisms or any other damage which could cause window to be inoperable. There shall be no permanent deformation of any main frame, sash or ventilator member in excess of the requirements established by AAMA 101 for the window types and classification specified in this section.

1.2.2 Air Infiltration

Air infiltration shall not exceed the amount established by AAMA 101for each window type when tested in accordance with ASTM E 283.

1.2.3 Water Penetration

Water penetration shall not exceed the amount established by AAMA 101for each window type when tested in accordance with ASTM E 547.

1.2.4 Thermal Performance

Thermal transmittance for thermally broken aluminum windows with insulating glass shall not exceed R-Value Class 0.59 m/W (R3.33 0.44 m k/Q (R2.5) when tested in accordance with AAMA 1503.1.

1.3 SUBMITTALS

Government approval is required for submittals with a "GA" designation; submittals having an "FIO" designation are for information only. The following shall be submitted in accordance with Section 01330 SUBMITTAL PROCEDURES:

SD-01 Data

Aluminum Windows; GA|AR.

Manufacturer's descriptive data and catalog cut sheets.

SD-04 Drawings

Aluminum Windows; GA|AR.

Drawings indicating elevations of window, rough-opening dimensions for each type and size of window, full-size sections, thicknesses of metal, fastenings, methods of installation and anchorage, connections with other work, type of wall construction, size and spacing of anchors, method of glazing, types and locations of operating hardware, mullion details, weatherstripping details, and window schedules showing locations of each window type.

SD-06 Instructions

Aluminum Windows; FIO;AR.

Manufacturer's preprinted installation instructions and cleaning instructions.

SD-09 Reports

Aluminum Windows; GA|AR.

Reports for each type of aluminum window attesting that identical windows have been tested and meet all performance requirements established under paragraph WINDOW PERFORMANCE.

SD-13 Certificates

Aluminum Windows; FIO;AR.

Certificates stating that the aluminum windows are AAMA certified conforming to requirements of this section. Labels or markings permanently affixed to the window will be accepted in lieu of certificates.

SD-14 Samples

Aluminum Windows; GA|ED.

Manufacturer's standard color samples of the specified finishes.

1.4 QUALIFICATION

Window manufacturer shall specialize in designing and manufacturing the type of aluminum windows specified in this section, and shall have a minimum of 5 years of documented successful experience. Manufacturer shall have the facilities capable of meeting contract requirements, single-source responsibility and warranty.

1.5 MOCK-UPS

Before fabrication, full-size mock-up of each type of aluminum window complete with glass and AAMA certification label shall be required for review of window construction and quality of hardware operation.

1.6 DELIVERY AND STORAGE

Aluminum windows shall be delivered to project site and stored in accordance with manufacturer's recommendations. Damaged windows shall be replaced with new windows.

1.7 WARRANTY

Manufacturer's standard performance guarantees or warranties that extend beyond a 1 year period shall be provided.

PART 2 PRODUCTS

2.1 ALUMINUM WINDOW TYPES

Aluminum windows shall consist of complete units including sash, glass, frame, weatherstripping and hardware. Windows shall conform to AAMA 101. Windows shall be double-glazed and shall have a minimum condensation resistance factor of 60 when tested in accordance with AAMA 1503.1. Operable windows shall permit cleaning the outside glass from inside the building.

2.1.1 Fixed Windows

Aluminum fixed windows shall conform to AAMA 101 F-C20 type, non-operable glazed frame, complete with provisions for reglazing in the field.

2.2 WEATHERSTRIPPING

Weatherstripping for ventilating sections shall be of type designed to meet water penetration and air infiltration requirements specified in this section in accordance with AAMA 101, and shall be manufactured of material compatible with aluminum and resistant to weather. Weatherstrips shall be factory-applied and easily replaced in the field. Neoprene or polyvinylchloride weatherstripping are not acceptable where exposed to direct sunlight.

2.3 ACCESSORIES

2.3.1 Fasteners

Fastening devices shall be window manufacturer's standard design made from aluminum, non-magnetic stainless steel, cadmium-plated steel, nickel/chrome-plated steel or magnetic stainless steel in compliance with AAMA 101. Self-tapping sheet metal screws will not be acceptable for material thicker than 2 mm (1/16 inch).

2.3.2 Hardware

Hardware shall be as specified for each window type and shall be fabricated of aluminum, stainless steel, cadmium-plated steel, zinc-plated steel or nickel/chrome-plated steel of quality established by AAMA 101.

2.3.3 Window Anchors

Anchoring devices for installing windows shall be made of aluminum, cadmium-plated steel, stainless steel, or zinc-plated steel conforming to AAMA 101.

2.3.4 Window Cleaner Anchors

Window cleaner anchors shall be manufactured of stainless-steel conforming to ASME A39.1. Window frames shall be reinforced to receive window cleaner anchors. Locations of window cleaner anchors shall be as shown.

2.4 GLASS AND GLAZING

Aluminum windows shall be designed for inside glazing, field glazing, and for glass types scheduled on drawings and specified in Section 08810GLASS AND GLAZING. Units shall be complete with glass and glazing provisions to meet AAMA 101. Glazing material shall be compatible with aluminum, and shall not require painting.

2.5 FINISH

2.5.1 High-Performance Coating

Exposed surfaces of aluminum windows shall be finished with a two-coat fluoropolymer coating system containing at least 70 percent by weight polyvinylidene fluoride, PVF2 resin, factory-applied, oven-baked, conforming to AAMA 605.2, with a primer coat of 0.005 to 0.008 mm (0.20 to 0.030 mils) and a color coat of minimum 0.025 mm (1.0 mils), total dry film thickness of 0.030 to 0.033 mm (1.2 to 1.3 mils). Finish shall be free of scratches and other blemishes.

2.5.2 Color

Color shall be in accordance with the COLOR SCHEDULE.

PART 3 EXECUTION

3.1 INSTALLATION

Aluminum windows shall be installed in accordance with approved shop drawings and manufacturer's published instructions. Aluminum surfaces in contact with masonry, concrete, wood and dissimilar metals other than stainless steel, zinc, cadmium or small areas of white bronze, shall be protected from direct contact using protective materials recommended by AAMA 101. The completed window installation shall be watertight in accordance with Section 07920 JOINT SEALING. Glass and glazing shall be installed in accordance with requirements of this section and Section 08810 GLASS AND GLAZING.

3.2 ADJUSTMENTS AND CLEANING

3.2.1 Hardware Adjustments

Final operating adjustments shall be made after glazing work is complete. Operating sash or ventilators shall operate smoothly and shall be weathertight when in locked position.

3.2.2 Cleaning

Aluminum window finish and glass shall be cleaned on exterior and interior sides in accordance with window manufacturer's recommendations. Alkaline or abrasive agents shall not be used. Precautions shall be taken to avoid scratching or marring window finish and glass surfaces.

-- End of Section --

SECTION 08700

BUILDERS' HARDWARE

PART 1 GENERAL

1.1 REFERENCES

The publications listed below form a part of this specification to the extent referenced. The publications are referred to in the text by basic designation only.

AMERICAN SOCIETY FOR TESTING AND MATERIALS (ASTM)

ASTM E 283	(1991) Determining the Rate of Air Leakage Through Exterior Windows, Curtain Walls and Doors Under Specified Pressure Differences Across the Specimen

BUILDERS HARDWARE MANUFACTURERS ASSOCIATION (BHMA)

BHMA-01	(Effective thru Jun 1995) Directory of Certified Locks & Latches
BHMA-02	(Effective thru Jul 1995) Directory of Certified Door Closers
BHMA-03	(Effective thru Jul 1996) Directory of Certified Exit Devices
BHMA ANSI/BHMA A156.1	(1988) Butts and Hinges
BHMA ANSI/BHMA A156.2	(1989) Bored and Preassembled Locks and Latches
BHMA ANSI/BHMA A156.3	(1994) Exit Devices
BHMA ANSI/BHMA A156.4	(1992) Door Controls - Closers
BHMA ANSI/BHMA A156.5	(1992) Auxiliary Locks & Associated Products
BHMA ANSI/BHMA A156.6	(1994) Architectural Door Trim
BHMA ANSI/BHMA A156.7	(1988) Template Hinge Dimensions
BHMA ANSI/BHMA A156.13	(1994) Mortise Locks & Latches
BHMA ANSI/BHMA A156.16	(1989) Auxiliary Hardware
BHMA ANSI/BHMA A156.17	(1993) Self Closing Hinges & Pivots
BHMA ANSI/BHMA A156.18	(1993) Materials and Finishes
BHMA ANSI/BHMA A156.19	(1990) Power Assist and Low Energy Power Operated Doors

BHMA ANSI/BHMA A156.21	(1989) Thresholds

DOOR AND HARDWARE INSTITUTE (DHI)

DHI-03	(1989) Keying Systems and Nomenclature
DHI-04	(1976) Recommended Locations for Builders' Hardware for Custom Steel Doors and Frames
DHI-05	(1990) Recommended Locations for Architectural Hardware for Standard Steel Doors and Frames
DHI-A115.IG	(1994) Installation Guide for Doors and Hardware
DHI A115-W	(Varies) Wood Door Hardware Standards (Incl All5-W1 thru A115-W9)

NATIONAL FIRE PROTECTION ASSOCIATION (NFPA)

NFPA 80	(1995) Fire Doors and Windows
NFPA 101	(1997) Safety to Life from Fire in Buildings and Structures
NFPA 105	(1993) Installation of Smoke-Control Door Assemblies

1.2 SUBMITTALS

Government approval is required for submittals with a "GA" designation; submittals having an "FIO" designation are for information only. The following shall be submitted in accordance with Section 01330 SUBMITTAL PROCEDURES:

SD-01 Data

Hardware and Accessories; FIO;AR

Manufacturer's descriptive data, technical literature, catalog cuts, and installation instructions. Spare parts data for locksets, exit devices, closers, electric locks, electric strikes, electro-magnetic closer holder release devices, and electric exit devices, after approval of the detail drawings, and not later than 1 month prior to the date of beneficial occupancy. The data shall include a complete list of parts and supplies, with current unit prices and source of supply.

SD-04 Drawings

Hardware Devices; GA|ED.

Detail drawings for hardware devices for computerized keying systems, magnetic cards, keyless push button access control systems, and other electrical hardware devices showing complete wiring and schematic diagrams and other details required to demonstrate proper function of units.

SD-07 Schedules

Hardware Schedule; GA|ED.

Hardware schedule listing all items to be furnished. The schedule shall include for each item: the quantities; manufacturer's name and catalog numbers; the ANSI number specified, sizes; detail information or catalog cuts; finishes; door and frame size and materials; location and hardware set identification cross-references to drawings; corresponding reference standard type number or function number from manufacturer's catalog if not covered by ANSI or BHMA; and list of abbreviations and template numbers.

Keying Schedule; GA|ED.

Keying schedule developed in accordance with DHI-03, after the keying meeting with the user.

SD-13 Certificates

Hardware and Accessories; FIO;AR.

The hardware manufacturer's certificates of compliance stating that the supplied material or hardware item meets specified requirements. Each certificate shall be signed by an official authorized to certify in behalf of the product manufacturer and shall identify quantity and date or dates of shipment or delivery to which the certificates apply. A statement that the proposed hardware items appear in BHMA-01, BHMA-02 and BHMA-03 directories of certified products may be submitted in lieu of certificates.

1.3 PREDELIVERY CONFERENCE

Upon approval of the Hardware Schedule, the construction Contractor shall arrange a conference with the hardware supplier, Contracting Officer and the using agency to determine keying system requirements. Location of the key control storage system, set-up and key identification labeling will also be determined.

1.4 DELIVERY, STORAGE, AND HANDLING

Hardware shall be delivered to the project site in the manufacturer's original packages. Each article of hardware shall be individually packaged in the manufacturer's standard commercial carton or container, and shall be properly marked or labeled to be readily identifiable with the approved hardware schedule. Each change key shall be tagged or otherwise identified with the door for which its cylinder is intended. Where double cylinder functions are used or where it is not obvious which is the key side of a door, appropriate instructions shall be included with the lock and on the hardware schedule. Manufacturer's printed installation instructions, fasteners, and special tools shall be included in each package.

1.5 SPECIAL TOOLS

Special tools, such as those supplied by the manufacturer, unique wrenches, and dogging keys, shall be provided as required to adjust hardware items.

1.6 WARRANTY

Manufacturer's standard performance guarantees or warranties that extend beyond a one year period shall be provided.

1.7 OPERATION AND MAINTENANCE MANUALS

Six complete copies of maintenance instructions listing routine maintenance procedures, possible breakdowns and repairs, and troubleshooting guides shall be provided. The instructions for electric locks, electric strikes, electro-magnetic closer holder release devices, and electric exit devices shall include simplified diagrams as installed.

PART 2 PRODUCTS

2.1 GENERAL HARDWARE REQUIREMENTS

Hardware shall conform to the requirements specified herein and the HARDWARE SETS listing at the end of this section. Hardware set numbers correspond to the set numbers shown on the drawings.

2.2 TEMPLATES

Requirements for hardware to be mounted on metal doors or metal frames shall be coordinated between hardware manufacturer and door or frame manufacturer by use of templates and other information to establish location, reinforcement required, size of holes, and similar details. Templates of hinges shall conform to BHMA ANSI/BHMA A156.7.

2.3 HINGES

Hinges shall conform to BHMA ANSI/BHMA A156.1. Hinges used on metal doors and frames shall also conform to BHMA ANSI/BHMA A156.7. Except as otherwise specified, hinge sizes shall conform to the hinge manufacturer's printed recommendations.

2.3.1 Hinges for Reverse Bevel Doors with Locks

Hinges for reverse bevel doors with locks shall have pins that are made nonremovable by means such as a set screw in the barrel, or safety stud, when the door is in the closed position.

2.3.2 Contractor's Option

Hinges with antifriction bearings may be furnished in lieu of ball bearing hinges, except where prohibited for fire doors by the requirements of NFPA 80.

2.3.3 Pivot Hinges

Pivot hinges shall conform to BHMA ANSI/BHMA A156.4.

2.3.4 Spring Hinges

Spring hinges shall conform to BHMA ANSI/BHMA A156.17.

2.3.5 Electric Hinges

Electric hinges shall conform to BHMA ANSI/BHMA A156.1 with modification of added electric wires to insure correct operation of electric hardware items.

2.4 LOCKS AND LATCHES

To the maximum extent possible, locksets, latchsets and deadlocks shall be

the products of a single manufacturer. Lock fronts for double-acting doors shall be rounded. Strikes for wood frames and pairs of wood doors shall be furnished with wrought boxes.

2.4.1 Bored Lock and Latchsets

Bored lock, latchsets, and strikes shall be series 4000 and shall conform to BHMA ANSI/BHMA A156.2, Grade 1. Bored type locks and latches for doors 35 mm thick and over shall have adjustable bevel fronts or otherwise conform to the shape of the door. Handles shall be leaver type.

2.4.2 Auxiliary Locks and Associated Products

Bored and mortise dead locks and dead latches, narrow style dead locks and dead latches, rim latches, dead latches, and dead bolts, and electric strikes shall conform to BHMA ANSI/BHMA A156.5. Bolt and latch retraction shall be dead bolt style. Strike boxes shall be furnished with dead bolt and latch strikes for Grade 1.

2.4.3 Lock Cylinders (Mortise, Rim and Bored)

Lock cylinders shall comply with BHMA ANSI/BHMA A156.5. Lock cylinder shall have not less than six pins. Cylinders shall have key removable type cores. A grand master keying system shall be provided. Construction interchangeable cores shall be provided. Disassembly of knob or lockset shall not be required to remove core from lockset. All locksets, lockable exit devices, and padlocks shall accept same interchangeable cores.

2.4.4 Lock Trim

Lock trim shall be cast, forged, or heavy wrought construction of commercial plain design. In addition to meeting the test requirement of BHMA ANSI/BHMA A156.2 or BHMA ANSI/BHMA A156.13, knobs, lever handles, roses, and escutcheons shall be 1.27 mm thick, if unreinforced. If reinforced, the outer shell shall be 0.89 mm thick and the combined thickness shall be 1.78 mm except that knob shanks shall be 1.52 mm thick. Knob diameter shall be 54 to 57 mm. Lever handles shall be of plain design with ends returned to no more than 10 mm from the door face.

2.5 EXIT DEVICES AND EXIT DEVICE ACCESSORIES

Exit devices and exit device accessories shall conform to BHMA ANSI/BHMA A156.3, Grade 1.

2.5.1 Exit Devices and Auxiliary Items

Trim shall be of wrought construction and commercial plain design with straight, beveled, or smoothly rounded sides, corners, and edges. Adjustable strikes shall be provided for rim type and vertical rod devices. Open back strikes shall be provided for pairs of doors with mortise and vertical rod devices; except open back strikes shall be used on labeled doors only where specifically provided for in the published listings. Touch bars shall be provided in lieu of conventional crossbars and arms. Escutcheons shall be provided not less than 175 by 55 mm. Escutcheons shall be cut to suit cylinders and operating trim.

2.5.2 Automatic Flush Bolts

Automatic flush bolts shall be Type 25 in accordance with BHMA ANSI/BHMA

A156.3, and shall be installed at the top and bottom of the inactive leaf of pairs of fire rated doors where specified in the hardware sets. Flush bolts shall be mortised in the strike edge of the door.

2.6 KEYING

Locks shall be keyed in sets or subsets as scheduled. Locks shall be furnished with the manufacturer's standard construction key system. Change keys for locks shall be stamped with change number and the inscription "U.S. Property - Do Not Duplicate." Keys shall be supplied as follows:

Locks:	3 change keys each lock.
Master keyed sets:	12 keys each set.
Grand master keys:	6 total.
Construction keys:	22 total.
Blank keys:	100 total.

The keys shall be furnished to the Contracting Officer arranged in a container in sets or subsets as scheduled.

2.7 DOOR CLOSING DEVICES

Door closing devices shall conform to BHMA ANSI/BHMA A156.4, Grade 1. Closing devices shall be products of one manufacturer for each type specified. The opening resistance of closing devices shall not exceed 67 N applied at the latch stile or exceed 22 N where low opening resistance is scheduled.

2.7.1 Surface Type Closers

Surface type closers shall be Grade 1, Series C02000 Standard Cover. Except as otherwise specified, sizes shall conform to the manufacturer's published recommendations. Closers for outswinging exterior doors shall have parallel arms or shall be top jamb mounted. Closers for doors close to a wall shall be of narrow projection so as not to strike the wall at the 90-degree open position.

2.8 POWER ASSIST AND LOW ENERGY POWER OPERATORS

Power assist and low energy power operators shall conform to BHMA ANSI/BHMA A156.19 and shall be electrically operated.

2.9 ARCHITECTURAL DOOR TRIM

Architectural door trim shall conform to BHMA ANSI/BHMA A156.6.

2.9.1 Push Plates

2.9.1.1 Combination Push-Pull Plates

Combination push-pull plates shall be Type J303, 1.27 mm thick minimum brass beveled four edges.

2.9.1.2 Flat Plates

Flat plates shall be Type J301 1.27 mm thick brass, size 100 mm x 300 mm. Edges of metal plates shall be beveled.

2.9.2 Door Pulls and Push/Pull Units

2.9.2.1 Arm Pulls

Arm pulls shall be Category J400, double base, brass.

2.9.2.2 Door Pulls

Door pulls shall be Category J400 brass of plain modern design. Pulls for hollow metal, mineral core wood or kalamein doors shall be Type J407 thru-bolted to Type J301 flat push plates.

2.9.3 Push and Pull Bars

Push and pull bars shall be Category J500, brass. Edges of mounting plates shall be beveled.

2.10 AUXILIARY HARDWARE

Auxiliary hardware, consisting of flush bolts, dustproof strikes, door holders, and door stops, shall conform to BHMA ANSI/BHMA A156.16. Lever extension flush bolts shall be Type L14081. Dust-proof strikes shall be Type L04011 for doors that are not fire rated. Dust-proof strikes shall be Type L04021 for fire rated doors.

2.11 MISCELLANEOUS

2.11.1 Metal Thresholds

Thresholds shall conform to BHMA ANSI/BHMA A156.21. Thresholds for exterior doors shall be extruded aluminum of the type indicated and shall provide proper clearance and an effective seal with specified weather stripping. Latching thresholds shall conform to BHMA ANSI/BHMA A156.3, Type 26, and of such height that the bottom of the door shall be 3 mm over the tread of the threshold and 3 mm below the top of the stop. Where required, thresholds shall be modified to receive projecting bolts of flush bolts and exit devices. Thresholds for doors accessible to the handicapped shall be beveled with slopes not exceeding 1:2 and with heights not exceeding 13 mm. Air leakage rate of weatherstripping shall not exceed 0.775 liters per second per lineal meter of crack when tested in accordance with ASTM E 283 at standard test conditions.

2.11.2 Aluminum Housed Type Weatherseals

Weatherseals of the type indicated shall consist of extruded aluminum retainers not less than 1.78 mm wall thickness with vinyl, neoprene, silicone rubber, polyurethane or vinyl brush inserts. Aluminum shall be bronze anodized. Weatherseal material shall be of an industrial/commercial grade. Seals shall remain functional through all weather and temperature conditions. Air leakage rate of weatherstripping shall not exceed 0.775 liters per second per lineal meter of crack when tested in accordance with ASTM E 283 at standard test conditions.

2.11.3 Gasketing

Gasketing shall be a compression type seal, silicon based, self-adhesive product for use on steel door frames with steel doors for 45 minute C-label. Color shall be white. Air leakage rate of weatherstripping shall not exceed 0.775 liters per second per lineal meter of crack when tested in accordance with ASTM E 283 at standard test conditions.

2.11.4 Key Control Storage System

Key control storage system shall conform to BHMA ANSI/BHMA A156.5, Type E8351, capacity 150, and shall be properly labeled for key identification. Set up, identification labeling and location of the key control storage shall be as directed at the Predelivery Conference.

2.12 FASTENINGS

Fastenings of proper type, size, quantity, and finish shall be supplied with each article of hardware. Machine screws and expansion shields shall be used for attaching hardware to concrete or masonry. Fastenings exposed to the weather in the finished work shall be of brass, bronze, or stainless steel. Sex bolts, through bolts, or machine screws and grommet nuts, where used on reverse-bevel exterior doors equipped with half-surface or full-surface hinges, shall employ one-way screws or other approved tamperproof screws. Screws for the jamb leaf of half-mortise and full-surface hinges attached to structural steel frames shall be one-way or other approved tamperproof type.

2.13 FINISHES

Unless otherwise specified, finishes shall conform to those identified in BHMA ANSI/BHMA A156.18. Where painting of primed surfaces is required, painting is specified in Section 09900 PAINTING, GENERAL.

2.14 HARDWARE FOR FIRE DOORS

Hardware for fire doors shall conform to the requirements of NFPA 80and NFPA 101.

PART 3 EXECUTION

3.1 APPLICATION

Hardware shall be located in accordance with DHI-04 and DHI-05, except that deadlocks shall be mounted 1220 mm above finish floor. When approved, slight variations in locations or dimensions will be permitted. Application shall be in accordance with DHI-A115.IG or DHI A115-W. Door control devices for exterior doors such as closers and holders, shall be attached to doors with thru bolts and nuts or sex bolts. Alternate fastening methods may be approved by the Contracting Officer when manufacturers' documentation is submitted to verify that the fastening devices and door reinforcements are adequate to resist wind induced stresses. Electric hardware items and access control devices shall be installed in accordance with manufacturer's printed installation procedures.

3.1.1 Hardware for Fire Doors and Smoke-Control Door Assemblies

Hardware for fire doors shall be installed in accordance with the requirements of NFPA 80. Exit devices installed on fire doors shall have a visible label bearing the marking "Fire Exit Hardware". Other hardware installed on fire doors, such as locksets, closers, and hinges shall have a visible label or stamp indicating that the hardware items have been approved by an approved testing agency for installation on fire-rated doors. Hardware for smoke-control door assemblies shall be installed in accordance with NFPA 105.

3.1.2 Door-Closing Devices

Door-closing devices shall be installed and adjusted in accordance with the templates and printed instructions supplied by the manufacturer of the devices. Insofar as practicable, doors opening to or from halls and corridors shall have the closer mounted on the room side of the door.

3.1.3 Key Control Storage Systems

Key control storage system shall be furnished to the Contracting Officer.

3.1.4 Auxiliary Hardware

Lever extension flush bolts shall be installed at the top and bottom of the inactive leaf of pairs of doors. The bottom bolt shall operate into a dust-proof floor strike or threshold.

3.1.5 Thresholds

Thresholds shall be secured with a minimum of three fasteners per single door width and six fasteners per double door width with a maximum spacing of 300 mm. Exterior thresholds shall be installed in a bed of sealant with expansion anchors and stainless steel screws, except that bronze or anodized bronze thresholds shall be installed with expansion anchors with brass screws. Minimum screw size shall be No. 10 length, dependent on job conditions, with a minimum of 19 mm thread engagement into the floor or anchoring device used.

3.1.6 Weatherseals

Weatherseals shall be located as indicated, snug to door face and fastened in place with color matched metal screws after door and frames have been finish painted. Screw spacing shall be as recommended by manufacturer.

3.1.7 Gasketing

Gasketing shall be installed at the inside edge of the hinge and head and latch sides of door frame. Frames shall be toleranced for a 3 mm clearance between door and frame. Frames shall be treated with tape primer prior to installation.

3.2 HARDWARE SETS

HDW#	QTY.	ITEM	ANSI#	FINISH
1)	3 pa.	HINGES	A2111(NPR)	611, 637, 666
	2 ea.	EXIT DEVICE, TYPE 8 FUNCTION 08		611, 637
	2 ea.	CLOSER	C02021 PT-4G	611, 637, 666
	2 ea.	THRESHOLD	J36130	
	2 set	WEATHERSTRIPPING		
2)	3 pr.	HINGES	A2111 (NPR)	611
	2 set	PUSH/PULL BARS	J504	611, 637, 666
	2 ea.	DEAD BOLT	E06061	611, 637, 666
	2 ea.	CLOSER (w/Power Assist)	C02021 PT-4G	611, 637, 666
	2 ea.	THRESHOLD	J32130	
	2 ea.	KICKPLATE	J102	
	2 set	WEATHERSTRIPPING		

3)	3 pr.	HINGES	A2111	611
	2 ea.	PUSH/PULL BARS	J504	611, 637, 666
	2 ea.	CLOSER (w/Power Assist	C02021 PT-4G	611, 637, 666
	2 ea.	THRESHOLD	J32130	
4)	3 pr.	HINGES	A2111 (NPR)	611
	1 ea.	LOCKSET, F07		611, 637
	1 set	FLUSH BOLTS	L04081	611, 637
	2 ea.	CLOSER/HOLDER ARM	C02061	611, 637, 666
	1 ea.	THRESHOLD	J36130	
	2 set	WEATHERSTRIPPING		

NOTE for HW #4: Hinges shall be extended through to enable door to open 180 degrees.

5)	1.5 pr.	HINGES	A5112	611
	1 ea.	LOCKSET, F84		611, 637
	1 ea.	CLOSER	C02021	611, 637, 666
	1 ea.	DOOR STOP	L02142	
6)	1.5 pr.	HINGES	A5112	611
	1 ea.	LOCKSET, F82		611, 637
	1 ea.	CLOSER	C02011	611, 637, 666
	1 ea.	DOOR STOP	L02142	
7)	3 pr.	HINGES	A2111 (NPR)	611
	1 ea.	LOCKSET, F84		611, 637
	2 ea.	FLUSH BOLTS	L04251	
	2 ea.	DUSTPROOF STRIKE	L04011	
	2 ea.	DOOR STOPS	L02142	
	2 set	CLOSER	C02011	611, 637, 666
8)	1.5 pr.	HINGES	A5112	611
	1 ea.	LOCKSET, F82		611, 637
	1 ea.	DOOR STOP	L02162	
9)	1.5 pr.	HINGES	A5112	611
	1 ea.	PULL	J401	
	1 ea.	PUSH PLATE	J301	
	1 ea.	CLOSER	C02011	611, 637, 666
	1 ea.	DOOR STOP	L02142	
10)	1.5 pr.	HINGES	A5112	611
	1 ea.	LOCKSET, F86		611, 637
	1 ea.	DOOR STOP	L02142	
11)	3 pr.	HINGES	A2111 (NPR)	611
	2 ea.	CLOSER	C02011	611, 637, 666
	2 ea.	DOOR STOP	L02142	
	2 ea.	FLUSH BOLTS	L04251	
	1 ea.	DUSTPROOF STRIKE	L04011	
	1 ea.	LOCKSET F85		611, 637
	2 ea.	NON-OPERABLE LEVER HANDLE		611, 637
12)	1.5 pr.	HINGES	A5112	611
	1 ea.	LOCKSET, F88		611, 637
	1 ea.	CLOSER	C02011	611, 637, 666
	1 ea.	DOOR STOP	L02142	

13)	1.5 pr.	HINGES	A5112	611
	1 ea.	LOCKSET, F75		611, 637
	1 ea.	CLOSER	C02011	611, 637, 666
	1 ea.	DOOR STOP	L02142	
14)	3 pr.	HINGES	A2111 (NPR)	611
	1 ea.	LOCKSET, F86		611, 637
	2 ea.	FLUSH BOLTS	L04251	
	2 ea.	DUSTPROOF STRIKE	L04011	
	2 ea.	DOOR STOPS	L02142	
	2 set	CLOSER	C02011	611, 637, 666
15)	1.5 pr.	HINGES	A5112	611
	1 ea.	LOCKSET, F86		611, 637
	1 ea.	CLOSER	C02021	611, 637, 666
	1 ea.	DOOR STOP	L02142	
16)	3 pa.	HINGES	A2111(NPR)	611, 637, 666
	2 ea.	EXIT DEVICE, TYPE 8 FUNCTION 08		611, 637
	2 ea.	CLOSER	C02021 PT-4G	611, 637, 666

-- End of Section --

SECTION 08810

GLASS AND GLAZING

PART 1 GENERAL

1.1 REFERENCES

The publications listed below form a part of this specification to the extent referenced. The publications are referred to in the text by basic designation only.

AMERICAN NATIONAL STANDARDS INSTITUTE (ANSI)

ANSI Z97.1	(1984; R 1994) Safety Performance Specifications and Methods of Test for Safety Glazing Materials Used in Buildings

AMERICAN SOCIETY FOR TESTING AND MATERIALS (ASTM)

ASTM C 509	(1994) Elastomeric Cellular Preformed Gasket and Sealing Material
ASTM C 669	(1995) Glazing Compounds for Back Bedding and Face Glazing of Metal Sash
ASTM C 864	(1993) Dense Elastomeric Compression Seal Gaskets, Setting Blocks, and Spacers
ASTM C 920	(1995) Elastomeric Joint Sealants
ASTM C 1036	(1991) Flat Glass
ASTM C 1048	(1992) Heat-Treated Flat Glass - Kind HS, Kind FT Coated and Uncoated Glass
ASTM D 395	(1989; R 1994) Rubber Property - Compression Set
ASTM E 773	(1988) Seal Durability of Sealed Insulating Glass Units
ASTM E 774	(1992) Sealed Insulating Glass Units
ASTM E 1300	(1994) Determining the Minimum Thickness and Type of Glass Required to Resist a Specified Load

COMMERCIAL ITEM DESCRIPTION (CID)

CID A-A-378	(Basic) Putty Linseed Oil Type, (for Wood-Sash-Glazing)

GLASS ASSOCIATION OF NORTH AMERICA (GANA)

GANA-01	(1997) Glazing Manual

GANA-04 (1995) Engineering Standards Manual

NATIONAL FIRE PROTECTION ASSOCIATION (NFPA)

NFPA 80 (1995) Fire Doors and Fire Windows

1.2 SUBMITTALS

Government approval is required for submittals with a "GA" designation; submittals having an "FIO" designation are for information only. The following shall be submitted in accordance with Section 01330 SUBMITTAL PROCEDURES:

SD-01 Data

Glass; GA|AR. Glazing Accessories; GA|AR.

Manufacturer's descriptive product data, handling and storage recommendations, installation instructions, and cleaning instructions.

SD-04 Drawings

Glazing Materials and Accessories; GA|AR.

Drawings showing complete details of the proposed setting methods, mullion details, edge blocking, size of openings, frame details, materials, and types and thickness of glass.

SD-13 Certificates

Glass; FIO;AR.

Certificates stating that the glass meets the specified requirements. Labels or manufacturers marking affixed to the glass will be accepted in lieu of certificates.

SD-14 Samples

Glass; GA|AR.

Two 203 x 254 mm samples of each of the following: tinted glass, tempered glass, and insulating glass units.

1.3 SYSTEM DESCRIPTION

Glazing systems shall be fabricated and installed watertight and airtight to withstand thermal movement and wind loading without glass breakage, gasket failure, deterioration of glazing accessories, and defects in the work. Glazed panels shall comply with the safety standards, as indicated in accordance with ANSI Z97.1. Glazed panels shall comply with indicated wind/snow loading in accordance with ASTM E 1300.

1.4 DELIVERY, STORAGE AND HANDLING

Glazing compounds shall be delivered to the site in the manufacturer's unopened containers. Glass shall be stored indoors in a safe, well ventilated dry location in accordance with manufacturer's instructions, and shall not be unpacked until needed for installation. Glass shall not be

stored on site over 1 month.

1.5 PROJECT/SITE CONDITIONS

Glazing work shall not be started until outdoor temperature is above 5 degrees C and rising, unless procedures recommended by glass manufacturer and approved by Contracting Officer are made to warm the glass and rabbet surfaces. Ventilation shall be provided to prevent condensation of moisture on glazing work during installation. Glazing work shall not be performed during damp or raining weather.

1.6 WARRANTY

1.6.1 Insulating Glass

Manufacturer shall warrant the insulating glass to be free of fogging or film formation on the internal glass surfaces caused by failure of the hermetic seal for a period of 10 years from Date of Substantial Completion. Warranty shall be signed by manufacturer.

PART 2 PRODUCTS

2.1 FLOAT GLASS

2.1.1 Annealed Glass

Annealed glass shall be Type I transparent flat type, Class 1 - clear, Quality q3 - glazing select, 80 percent light transmittance, conforming to ASTM C 1036.

2.2 INSULATING GLASS

Insulating glass shall be Class A preassembled units of dual-seal construction consisting of lites of glass separated by an aluminum, steel, or stainless steel, spacer and dehydrated space conforming to ASTM E 773 and ASTM E 774. Spacer shall be roll-formed, with bent or tightly welded or keyed and sealed joints to completely seal the spacer periphery and eliminate moisture and hydrocarbon vapor transmission into airspace through the corners. Primary seal shall be compressed polyisobutylene and the secondary seal shall be a specially formulated silicone. Glass types shall be as follows:

2.2.1 Clear Insulating Glass

Glass for two-pane insulating units shall be Type I annealed glass, Class 1 - clear, Quality q3 - glazing select, conforming to ASTM C 1036. Glass performance shall be K-Value/Winter Nighttime 2.74.

2.2.2 Low-E Insulating Glass

All exterior glazing, including skylights, shall be Low-E insulating glass pane units of Type I annealed flat glass, Class 2-tinted with anti-reflective low-emissivity coating on No. 2 surface (inside surface of exterior pane), Quality q3 - glazing select, conforming to ASTM C 1036. Glass performance shall be K-Value/Winter Nighttime 1.97, shading coefficient .45. Color shall be gray.

2.3 HEAT-TREATED GLASS

Heat-treated glass shall conform to the following requirements.

2.3.1 Tempered Glass

Tempered glass shall be kind FT fully tempered transparent flat type, Class 1-clear, Condition A uncoated surface, Quality q3 - glazing select, 80 percent light transmittance, .81 percent shading coefficient conforming to ASTM C 1048 and GANA-04. Color shall be clear.

2.4 MIRRORS

2.4.1 Glass Mirrors

Glass for mirrors shall be Type I transparent flat type, Class 1-clear, Glazing Quality q1 6 mm (1/4 inch) thick conforming to ASTM C 1036. Glass color shall be clear as shown in the COLOR SCHEDULE. Glass shall be coated on one surface with silver coating, copper protective coating, and mirror backing paint. Silver coating shall be highly adhesive pure silver coating of a thickness which shall provide reflectivity of 83 percent or more of incident light when viewed through 6 mm (1/4 inch) thick glass, and shall be free of pinholes or other defects. Copper protective coating shall be pure bright reflective copper, homogeneous without sludge, pinholes or other defects, and shall be of proper thickness to prevent "adhesion pull" by mirror backing paint. Mirror backing paint shall consist of two coats of special scratch and abrasion-resistant paint , and shall be baked in uniform thickness to provide a protection for silver and copper coatings which will permit normal cutting and edge fabrication.

2.4.2 Mirror Accessories

2.4.2.1 Mastic

Mastic for setting mirrors shall be a polymer type mirror mastic resistant to water, shock, cracking, vibration and thermal expansion. Mastic shall be compatible with mirror backing paint, and shall be approved by mirror manufacturer.

2.4.2.2 Mirror Frames

Mirrors shall be provided with mirror frames (J-mold channels) fabricated of one-piece roll-formed Type 304 stainless steel with No. 4 brushed satin finish and concealed fasteners which will keep mirrors snug to wall. Frames shall be 32 x 6 x 6 mm) continuous at top and bottom of mirrors. Concealed fasteners of type to suit wall construction material shall be provided with mirror frames.

2.4.2.3 Mirror Clips

Concealed fasteners of type to suit wall construction material shall be provided with clips.

2.5 GLAZING ACCESSORIES

2.5.1 Preformed Tape

Preformed tape shall be elastomeric rubber extruded into a ribbon of a width and thickness suitable for specific application. Tape shall be of type which will remain resilient, have excellent adhesion, and be chemically compatible to glass, metal, or wood.

2.5.2 Sealant

Sealant shall be elastomeric conforming to ASTM C 920, Type S or M, Grade NS, Class 12.5, Use G, of type chemically compatible with setting blocks, preformed sealing tape and sealants used in manufacturing insulating glass. Color of sealant shall be as shown in the COLOR SCHEDULE.

2.5.3 Glazing Gaskets

Glazing gaskets shall be extruded with continuous integral locking projection designed to engage into metal glass holding members to provide a watertight seal during dynamic loading, building movements and thermal movements. Glazing gaskets for a single glazed opening shall be continuous one-piece units with factory-fabricated injection-molded corners free of flashing and burrs. Glazing gaskets shall be in lengths or units recommended by manufacturer to ensure against pull-back at corners. Glazing gasket profiles shall be as indicated on drawings.

2.5.3.1 Fixed Glazing Gaskets

Fixed glazing gaskets shall be closed-cell (sponge) smooth extruded compression gaskets of cured elastomeric virgin neoprene compounds conforming to ASTM C 509, Type 2, Option 1.

2.5.3.2 Wedge Glazing Gaskets

Wedge glazing gaskets shall be high-quality extrusions of cured elastomeric virgin neoprene compounds, ozone resistant, conforming to ASTM C 864, Option 1, Shore A durometer between 65 and 75.

2.5.3.3 Aluminum Framing Glazing Gaskets

Glazing gaskets for aluminum framing shall be permanent, elastic, non-shrinking, non-migrating, watertight and weathertight.

2.5.4 Putty and Glazing Compound

Glazing compound shall conform to ASTM C 669 for face-glazing metal sash. Putty shall be linseed oil type conforming to CID A-A-378for face-glazing primed wood sash. Putty and glazing compounds shall not be used with insulating glass or laminated glass.

2.5.5 Setting and Edge Blocking

Neoprene setting blocks shall be dense extruded type conforming to ASTM D 395, Method B, Shore A durometer between 70 and 90. Edge blocking shall be Shore A durometer of 50 (+ or - 5). Silicone setting blocks shall be required when blocks are in contact with silicone sealant. Profiles, lengths and locations shall be as required and recommended in writing by glass manufacturer.

PART 3 EXECUTION

3.1 PREPARATION

Openings and framing systems scheduled to receive glass shall be examined for compliance with approved shop drawings, GANA-01 and glass manufacturer's recommendations including size, squareness, offsets at

corners, presence and function of weep system, face and edge clearance requirements and effective sealing between joints of glass-framing members. Detrimental materials shall be removed from glazing rabbet and glass surfaces and wiped dry with solvent. Glazing surfaces shall be dry and free of frost.

3.2 INSTALLATION

Glass and glazing work shall be performed in accordance with approved shop drawings, GANA-01, glass manufacturer's instructions and warranty requirements. Glass shall be installed with factory labels intact and removed only when instructed. Wired glass and fire/safety rated glass shall be installed in accordance with NFPA 80. Edges and corners shall not be ground, nipped or cut after leaving factory. Springing, forcing or twisting of units during installation will not be permitted.

3.3 CLEANING

Upon completion of project, outside surfaces of glass shall be washed clean and the inside surfaces of glass shall be washed and polished in accordance with glass manufacturer's recommendations.

3.4 PROTECTION

Glass work shall be protected immediately after installation. Glazed openings shall be identified with suitable warning tapes, cloth or paper flags, attached with non-staining adhesives. Reflective glass shall be protected with a protective material to eliminate any contamination of the reflective coating. Protective material shall be placed far enough away from the coated glass to allow air to circulate to reduce heat buildup and moisture accumulation on the glass. Glass units which are broken, chipped, cracked, abraded, or otherwise damaged during construction activities shall be removed and replaced with new units.

-- End of Section --

SECTION 09250

GYPSUM WALLBOARD

PART 1 GENERAL

1.1 REFERENCES

The publications listed below form a part of this specification to the extent referenced. The publications are referred to in the text by basic designation only.

AMERICAN SOCIETY FOR TESTING AND MATERIALS (ASTM)

ASTM A 580	(1995a) Stainless and Heat Resisting Steel Wire
ASTM A 853	(1993) Steel Wire, Carbon, for General Use
ASTM B 164	(1993) Nickel-Copper Alloy Rod, Bar, and Wire
ASTM C 36	(1995) Gypsum Wallboard
ASTM C 79	(1994) Gypsum Sheathing Board
ASTM C 475	(1994) Joint Compound and Joint Tape for Finishing Gypsum Board
ASTM C 514	(1996) Nails for the Application of Gypsum Board
ASTM C 557	(1993a) Adhesive for Fastening Gypsum Wallboard to Wood Framing
ASTM C 630	(1996a) Water-Resistant Gypsum Backing Board
ASTM C 645	(1995) Non-Load (Axial) Bearing Steel Studs, Runners (Track), and Rigid Furring Channels for Screw Application of Gypsum Board
ASTM C 754	(1996) Installation of Steel Framing Members to Receive Screw-Attached Gypsum Board
ASTM C 840	(1996) Application and Finishing of Gypsum Board
ASTM C 931	(1995) Exterior Gypsum Soffit Board
ASTM C 1002	(1996a) Steel Drill Screws for the Application of Gypsum Board or Metal Plaster Bases

ASTM C 1047	(1994) Accessories for Gypsum Wallboard and Gypsum Veneer Base

GYPSUM ASSOCIATION (GA)

GA 216	(1996) Application and Finishing of Gypsum Board
GA 600	(1994) Fire Resistance Design Manual

UNDERWRITERS LABORATORIES (UL)

UL-05	(1997) Fire Resistance Directory

1.2 SYSTEM DESCRIPTION

1.2.1 Fire-Rated Construction

Joints of fire-rated gypsum board enclosures shall be closed and sealed in accordance with UL test requirements or GA requirements, and as required to meet pressurization requirements. Penetrations through rated partitions and ceilings shall be sealed tight in accordance with tested systems. Fire ratings shall be as indicated.

1.2.2 Pressurized Enclosures

Pressurized fire-rated gypsum board enclosures shall allow the mechanical and electrical life-safety systems to operate in accordance with the design intent. Air pressure within elevator shaft shall be 360 Pa. Air pressure within stair shaft shall be 240 Pa. Maximum mid-span deflection shall be L/360.

1.3 SUBMITTALS

Government approval is required for submittals with a "GA" designation; submittals having an "FIO" designation are for information only. The following shall be submitted in accordance with Section 01330 SUBMITTAL PROCEDURES:

SD-04 Drawings

Steel Framing; FIO;AR. Control Joints; FIO;AR. Fire-Resistant Assemblies; FIO;AR.

Drawings and installation details for ceiling framing, furring, special wall framing, and framed openings in walls and ceilings.

SD-13 Certificates

Gypsum Wallboard; FIO;AR. Water-Resistant Gypsum Board; FIO;AR. Exterior Gypsum Soffit Board; FIO;AR. Steel Framing; FIO;AR. Fire-Rated Gypsum Board; FIO;AR.

Certificates stating that the steel framing and gypsum wallboard meet the specified requirements.

1.4 QUALIFICATIONS

Manufacturer shall specialize in manufacturing the types of material

specified and shall have a minimum of 5 years of documented successful experience. Installer shall specialize in the type of gypsum board work required and shall have a minimum of 3 years of documented successful experience.

1.5 DELIVERY, STORAGE AND HANDLING

Materials shall be delivered in original containers bearing the name of manufacturer, contents, and brand name. Materials shall be stored off the ground in a weathertight structure for protection. Gypsum boards shall be stacked flat, off floor and supported to prevent sagging and warpage. Adhesives and joint materials shall be stored in accordance with manufacturer's printed instructions. Damaged or deteriorated materials shall be removed from jobsite.

1.6 ENVIRONMENTAL CONDITIONS

Environmental conditions for application and finishing of gypsum board shall be in accordance with ASTM C 840. During the application of gypsum board without adhesive, a room temperature of not less than 4 degrees C shall be maintained. During the application of gypsum board with adhesive, a room temperature of not less than 10 degrees C shall be maintained for 48 hours prior to application and continuously afterwards until completely dry. Building spaces shall be ventilated to remove water not required for drying joint treatment materials. Drafts shall be avoided during dry hot weather to prevent materials from drying too rapidly.

PART 2 MATERIALS

2.1 NON-LOADBEARING STUD WALLS

2.1.1 Studs

Studs for non-loadbearing walls shall conform to ASTM C 645 and ASTM C 995. Studs shall be prefabricated C-shaped, roll formed steel made from G40 hot-dip galvanized coated sheet, with punched web for utility access.

2.1.2 Runner Tracks

Floor and ceiling runner tracks shall conform to ASTM C 645. Tracks shall be prefabricated, U-shaped with minimum 25 mm flanges, unpunched web, thickness to match studs, made from G40 hot-dip galvanized coated sheet.

2.2 SUSPENDED CEILING FRAMING

Carrying channels shall be formed from 1.40 mm thick cold-rolled steel, 38 x 19 mm. Furring members shall be formed from cold-rolled steel, 22 x 65 mm. Carrying channels and furring members shall be made from hot-dip galvanized coated sheet.

2.3 GYPSUM BOARD

Gypsum board shall have square-cut ends, tapered or beveled edges and shall be maximum possible length. Gypsum board thickness shall be as shown.

2.3.1 Standard Gypsum Board

Regular gypsum board shall conform to ASTM C 36, and shall be 1200 mm wide.

2.3.2 Fire-Rated Gypsum Board

Fire-rated gypsum board shall conform to ASTM C 36, and shall be Type X or Type C as required, 1200 mm wide.

2.3.3 Water-Resistant Gypsum Board

Water-resistant gypsum board shall conform to ASTM C 630, regular, with water-resistant paper faces, paintable surfaces, and shall be 1200 mm width and maximum permissible length. Water-resistant gypsum board shall not be used on ceilings.

2.3.4 Foil-Backed Gypsum Board

Foil-backed gypsum board shall conform to ASTM C 36, regular, 1200 mm wide. Gypsum board shall have aluminum foil vapor retarder laminated to back surface.

2.3.5 Exterior Gypsum Soffit Board

Exterior gypsum soffit board shall conform to ASTM C 931, regular, 1200 mm wide.

2.3.6 Exterior Sheathing Board

Exterior sheathing board shall conform to ASTM C 79, Type X, shall have water-resistant core, water-repellant paper faces each side, with tongue-and-groove edges, and be 600 mm wide, or square edges and 1200 mm wide.

2.4 TRIM, MOLDINGS, AND ACCESSORIES

2.4.1 Taping and Embedding Compound

Taping and embedding compound shall conform to ASTM C 475. Compound shall be specifically formulated and manufactured for use in embedding tape at gypsum wallboard joints and fastener heads, and shall be compatible with tape and substrate.

2.4.2 Finishing or Topping Compound

Finishing or topping compound shall conform to ASTM C 475. Compound shall be specifically formulated and manufactured for use as a finishing compound for gypsum board.

2.4.3 All-Purpose Compound

All-purpose compound shall be specifically formulated and manufactured to use as a taping and finishing compound, and shall be compatible with tape and substrate.

2.4.4 Joint Tape

Joint tape shall conform to ASTM C 475 and shall be as recommended by gypsum board manufacturer.

2.4.5 Trim, Control Joints, Beads, Stops and Nosings

Items used to protect edges, corners, and to provide architectural features

shall be in accordance with ASTM C 1047.

2.5 FASTENINGS AND ADHESIVES

2.5.1 Nails

Nails shall conform to ASTM C 514. Nails shall be hard-drawn low or medium-low carbon steel, suitable for intended use. Special nails for predecorated gypsum board shall be as recommended by predecorated gypsum board manufacturer.

2.5.2 Screws

Screws shall conform to ASTM C 1002. Screws shall be self-drilling and self-tapping steel, Type G for gypsum board to gypsum board, Type S for wood or light-gauge steel framing and Type W for wood framing.

2.5.3 Adhesives

Adhesives shall conform to ASTM C 557. Adhesives shall be formulated to bond gypsum board to wood framing members. For securing gypsum board to metal framing, adhesive shall be as recommended by gypsum board manufacturer.

2.5.4 Hangers

Suspended ceiling runner channel hangers shall be soft, annealed steel wire not less than No. 8 SWG, conforming to ASTM A 853.

2.5.5 Wire and Clip Type Fastenings

Tie wire, clips, rings, and other fastenings shall be corrosion-resisting steel conforming to ASTM A 580, composition 302, 304, or 316, Condition A, or nickel-copper alloy conforming to ASTM B 164, annealed condition except that walls, partitions, and other vertical surfaces not incorporated in ceiling construction may be erected with soft, annealed steel conforming to ASTM A 853.

2.5.5.1 Tie Wire

Tie wire for constructing partitions and vertical furring, for securing metal lath to supports, and for lacing shall be not less than No. 18 SWG. Tie wire for other applications shall be not less than No. 16 SWG.

2.5.5.2 Clips

Clips used in lieu of tie wire for securing the furring channels to the runner channels in ceiling construction shall be made from strip not less than 3 mm thick or shall be hairpin clip, formed of wire not less than 0.4 mm nominal diameter. Other clips and rings or fastenings of similar materials shall be equivalent in holding power to that provided by tie wire for the specific application.

PART 3 EXECUTION

3.1 INTERIOR WALL FRAMING

Steel framing and furring members shall be installed in accordance with ASTM C 754. Members shall be in alignment with spacings not to exceed the

maximum spacings indicated on drawings. Runners shall be aligned accurately at the floor and ceiling and securely anchored.

3.1.1 Partition Framing System

Metal framing and furring system shall be capable of carrying a transverse load of 5 psf without exceeding either the allowable stress or a deflection of L/240.

3.1.2 Wall Openings

The framing system shall provide for the installation and anchorage of the required subframes or finish frames for wall openings at doors, pass-through openings, and access panels. Partitions abutting continuous suspended ceilings shall be strengthened for rigidity at rough openings of more than 750 mm wide. Studs at openings shall be 0.84 mm (0.0329 in) minimum bare metal thickness and spot grouted at jamb anchor inserts. Double studs shall be fastened together with screws and secured to floor and overhead runners. Two studs placed back-to-back shall be used for framing solid-core doors, doors over 900 mm wide and extra-heavy doors such as X-ray room doors.

3.1.3 Wall Control Joints

Control joints for expansion and contraction in the walls shall be constructed with double studs installed 13 mm apart in interior walls or wall furrings where indicated on drawings. Control joint spacing shall not exceed 9 m. Ceiling-height door frames may be used as vertical control joints. Door frames of less than ceiling height may be used as control joints only if standard control joints extend to ceiling from both corners of top of door frame. Control joints between studs shall be filled with firesafing insulation in fire rated partitions.

3.2 SUSPENDED CEILING FRAMING

Suspended ceiling system framing shall be installed in accordance with ASTM C 754.

3.2.1 Hangers

Hangers shall be spaced not more than 1200 mm along runner channels and 900 mm in the other direction or 1050 mm in both directions unless otherwise indicated. Locations of hanger wires shall be coordinated with other work. Hangers at ends of runner channels shall be located not more than 150 mm from wall. Hanger wire shall be looped around bottom chord of open-web steel joists, or secured to structural elements with suitable fasteners. Sags or twists which develop in the suspended system shall be adjusted. Damaged or faulty parts shall be replaced.

3.2.2 Main Runners

Main runner channels shall be installed in accordance with ASTM C 754. Hanger wires shall be double strand saddle-tied to runner channels and the ends of hanger wire shall be twisted three times around itself. Main runners shall be located to within 150 mm of the paralleling wall to support the ends of cross furring. Main runners shall not come in contact with abutting masonry or concrete walls. Where main runners are spliced, ends shall be overlapped 300 mm with flanges of channels interlocked, and shall be securely tied at each end of splice with wire looped twice around

the channels.

3.2.3 Furring Channels

Furring channels shall be spaced in accordance with ASTM C 754. Furring channels shall be secured to the runner channels and to structural supports at each crossing with tie wire, hairpin clips, or equivalent fastenings. Furring channels shall be located within 50 mm of parallel walls and beams, and shall be cut 13 mm short of abutting walls.

3.2.4 Ceiling Openings

Support members shall be provided as required at ceiling openings for access panels, recessed light fixtures, and air supply or exhaust. Support members shall be not less than 38 mm main runner channels and vertically installed suspension wires or straps shall be located to provide at least the minimum support specified herein for furring and wallboard attachment. Intermediate structural members not a part of the structural system, shall be provided for attachment or suspension of support members.

3.2.5 Light Fixtures

Light fixtures shall not be supported directly from suspended ceiling runners. Hanger wires for recessed or surface mounted light fixtures shall be anchored to structure at four corners of light fixtures, and additional wires shall be provided at appropriate locations to carry the weight of light fixtures.

3.2.6 Control Joints

Ceiling control joints for expansion and contraction shall be located where indicated on drawings. A control joint or intermediate blocking shall be installed where ceiling framing members change direction.

3.2.6.1 Interior Ceilings With Perimeter Relief

Control joints shall be installed so that linear dimensions between control joints shall not exceed 15 m in either direction nor more than 230 square meters.

3.2.6.2 Interior Ceilings Without Perimeter Relief

Control joints shall be installed so that linear dimensions between control joints shall not exceed 9 m in either direction nor more than 84 square meters.

3.2.6.3 Exterior Ceilings

Control joints shall be installed so the linear dimensions between control joints shall not exceed 9 m in either direction nor more than 84 square meters.

3.3 APPLICATION OF GYPSUM BOARD

Gypsum board shall be installed in accordance with ASTM C 840 and GA 216 and as specified. Edges and ends of gypsum boards shall be cut to obtain neat fitting joints. End joints of adjoining boards shall be staggered, and shall be staggered on opposite sides of wall. Boards shall be applied with moderate contact without forcing in place. Holes for pipes, fixtures

or other small openings shall be cut with a tool which will provide a neat fit. Screws shall be driven so that the heads are slightly below the plane of paper face. Fracturing the paper face or damaging the core shall be avoided. Trim shall be installed at external and internal angles formed by the intersecting gypsum board surfaces with other surfaces. Corner beads shall be installed to vertical and horizontal corners in accordance with manufacturer's published instructions.

3.3.1 Two-Ply Gypsum Board

Second layer of gypsum board shall be applied perpendicular to first layer with joints staggered and secured with mechanical fasteners and adhesive. The use of adhesive shall be in accordance with ASTM C 840.

3.3.2 Foil-Backed Gypsum Board

Foil-backed gypsum board shall be placed with reflective surface against framing members.

3.3.3 Backing Board

Gypsum board and water-resistant gypsum backing board used as a substrate to receive ceramic tile shall be in accordance with ASTM C 840, System X.

3.3.4 Adhesively-Applied Gypsum Board

Walls scheduled to receive adhesively-applied gypsum board shall be dry, free of dust, oil, or form release agents, protrusions or voids, or foreign matter that would affect a proper bond.

3.3.5 Exterior Gypsum Sheathing

Exterior gypsum sheathing shall be flashed at openings so that water intrusion will not contact the sheathing. Vertical end and edge joints shall abut over the centers of framing members and shall be offset a minimum of one framing space between adjacent rows of gypsum sheathing. Sheathing shall be installed in accordance with manufacturer's instructions.

3.4 TRIM, MOLDINGS, AND ACCESSORIES INSTALLATION

Trim, moldings and accessories shall be installed in accordance with GA 216.

3.5 TAPING AND FINISHING

Gypsum board taping and finishing shall be performed in accordance with ASTM C 840. Boards shall be kept free of dirt, oil and other foreign matter that could cause a lack of bond. Screw heads, dents, gouges, and cut-outs shall be filled with joint compound and sanded. Accessories at exposed joints, edges, corners, openings, and similar locations shall be taped, floated with joint compound, and sanded to produce surfaces ready for gypsum board finishes.

3.6 FIRE-RESISTANT ASSEMBLIES

Gypsum wallboard construction for fire-rated assemblies shall be in accordance with UL-05, or GA 600 for the design number indicated on drawings.

3.7 PATCHING

Surface defects and damage shall be corrected as required to leave gypsum board smooth, uniform in appearance, and ready to receive finish as specified.

-- End of Section --

SECTION 09310

CERAMIC TILE

PART 1 GENERAL

1.1 REFERENCES

The publications listed below form a part of this specification to the extent referenced. The publications are referred to in the text by basic designation only.

AMERICAN NATIONAL STANDARDS INSTITUTE (ANSI)

ANSI A108.1A	(1992) Installation of Ceramic Tile in the Wet-Set Method, with Portland Cement Mortar
ANSI A108.1B	(1992) Installation of Ceramic Tile on a Cured Portland Cement Mortar Setting Bed with Dry-Set or Latex Portland Cement Mortar
ANSI A108.4	(1992) Installation of Ceramic Tile with Organic Adhesives or Water Cleanable Tile Setting Epoxy Adhesive
ANSI A108.5	(1992) Installation of Ceramic Tile with Dry-Set Portland Cement Mortar or Latex-Portland Cement Mortar
ANSI A108.8	(1992) Installation of Ceramic Tile with Chemical Resistant Furan Mortar and Grout
ANSI A108.10	(1992) Installation of Grout in Tilework
ANSI A108.11	(1992) Interior Installation of Cementitious Backup Units
ANSI A118.1	(1992) Dry-Set Portland Cement Mortar
ANSI A118.2	(1992) Conductive Dry-Set Portland Cement Mortar
ANSI A118.4	(1992) Latex-Portland Cement Mortar
ANSI A118.6	(1992) Ceramic Tile Grouts
ANSI A118.9	(1992) Test Methods and Specifications for Cementitious Backer Units
ANSI A136.1	(1992) Organic Adhesives for Installation of Ceramic Tile
ANSI A137.1	(1988) Ceramic Tile

AMERICAN SOCIETY FOR TESTING AND MATERIALS (ASTM)

ASTM A 185	(1994) Steel Welded Wire Fabric, Plain, for Concrete Reinforcement
ASTM C 33	(1993) Concrete Aggregates
ASTM C 144	(1993) Aggregate for Masonry Mortar
ASTM C 150	(1996) Portland Cement
ASTM C 206	(1984; R 1992) Finishing Hydrated Lime
ASTM C 207	(1991; R 1992) Hydrated Lime for Masonry Purposes
ASTM C 241	(1990) Abrasion Resistance of Stone Subjected to Foot Traffic
ASTM C 373	(1988; R 1994) Water Absorption, Bulk Density, Apparent Porosity, and Apparent Specific Gravity of Fired Whiteware Products
ASTM C 648	(1984; R 1994) Breaking Strength of Ceramic Tile
ASTM C 847	(1995) Metal Lath
ASTM C 1026	(1987; R 1992) Measuring the Resistance of Ceramic Tile to Freeze-Thaw Cycling
ASTM C 1027	(1984; R 1990) Determining Visible Abrasion Resistance of Glazed Ceramic Tile
ASTM C 1028	(1989) Determining the Static Coefficient of Friction of Ceramic Tile and Other Like Surfaces by the Horizontal Dynamometer Pull-Meter Method

MARBLE INSTITUTE OF AMERICA (MIA)

MIA-01	(1991) Design Manual IV Dimensional Stone

TILE COUNCIL OF AMERICA (TCA)

TCA-01	(1995) Handbook for Ceramic Tile Installation

1.2 SUBMITTALS

Government approval is required for submittals with a "GA" designation; submittals having an "FIO" designation are for information only. The following shall be submitted in accordance with Section 01330 SUBMITTAL PROCEDURES:

SD-01 Data

Tile; GA|ED. Setting-Bed; FIO;AR. Mortar, Grout, and Adhesive; GA|ED.

Manufacturer's catalog data.

SD-06 Instructions

Tile; FIO;AR. Mortar and Grout; FIO;AR.

Manufacturers preprinted installation and cleaning instructions.

SD-09 Reports

Testing; FIO;AR.

Copy of results for electrical resistance tests.

SD-13 Certificates

Tile; FIO;AR. Mortar, Grout, and Adhesive; FIO;AR.

Certificates indicating conformance with specified requirements. A master grade certificate shall be furnished for tile.

SD-14 Samples

Tile; GA|ED. Accessories; GA|ED. Marble Thresholds; GA|ED.

Samples of sufficient size to show color range, pattern, type and joints.

1.3 DELIVERY AND STORAGE

Materials shall be delivered to the project site in manufacturer's original unopened containers with seals unbroken and labels and hallmarks intact. Materials shall be kept dry, protected from weather, and stored under cover.

1.4 ENVIRONMENTAL REQUIREMENTS

Ceramic tile work shall not be performed unless the substrate and ambient temperature is at least 10 degrees C and rising. Temperature shall be maintained above 10 degrees C while the work is being performed and for at least 7 days after completion of the work. When temporary heaters are used they shall be vented to the outside to avoid carbon dioxide damage to new tilework.

1.5 WARRANTY

Manufacturer's standard performance guarantees or warranties that extend beyond a 1-year period shall be provided.

PART 2 PRODUCTS

2.1 TILE

Tile shall be standard grade conforming to ANSI A137.1. Containers shall be grade sealed. Seals shall be marked to correspond with the marks on the signed master grade certificate. Tile shall be impact resistant with a minimum breaking strength for wall tile of 41 kg and 113 kg for floor tile in accordance with ASTM C 648. Tile for cold climate projects shall be rated frost resistant by the manufacturer as determined by ASTM C 1026. Water absorption shall be 0.6 maximum percent in accordance with ASTM C 373. Floor tile shall have a minimum static coefficient of friction of 0.6 in

accordance with ASTM C 1028. Tile shall be Class III as rated by the manufacturer when tested in accordance with ASTM C 1027for abrasion resistance as related to foot traffic.

2.1.1 Mosaic Tile

Ceramic mosaic tile and trim shall be unglazed with cushion edges porcelain unpolished with sharply formed face. Tile size shall be 50 x 50 mm. Color shall be as indicated on the drawings.

2.1.2 Glazed Wall Tile

Glazed wall tile and trim shall be cushion edged with bright glaze. Tile shall be 100 x 100 mm. Color shall be as indicated on the drawings.

2.2 SETTING-BED

The setting-bed shall be composed of the following:

2.2.1 Aggregate for Concrete Fill

Aggregate shall conform to ASTM C 33. Maximum size of coarse aggregate shall not be greater than one-half the thickness of concrete fill.

2.2.2 Portland Cement

Cement shall conform to ASTM C 150, Type I, white for wall mortar and gray for other uses.

2.2.3 Sand

Sand shall conform to ASTM C 144.

2.2.4 Hydrated Lime

Hydrated lime shall conform to ASTM C 206, Type S or ASTM C 207, Type S.

2.2.5 Metal Lath

Metal lath shall be flat expanded type conforming to ASTM C 847, and weighing not less than 1.4 kg/square meter.

2.2.6 Reinforcing Wire Fabric

Wire fabric shall conform to ASTM A 185. Wire shall be either 50 x 50 mm mesh, 16/16 wire or 38 x 50 mm mesh, 16/13 wire.

2.3 WATER

Water shall be potable.

2.4 MORTAR, GROUT, AND ADHESIVE

Mortar, grout, and adhesive shall conform to the following:

2.4.1 Dry-Set Portland Cement Mortar

ANSI A118.1.

2.4.2 Conductive Dry-Set Mortar

ANSI A118.2.

2.4.3 Latex-Portland Cement Mortar

ANSI A118.4.

2.4.4 Ceramic Tile Grout

ANSI A118.6; [sand portland cement grout] [dry-set grout] [latex-portland cement grout] [commercial portland cement grout] [silicone rubber grout].

2.4.5 Organic Adhesive

ANSI A136.1, Type I.

2.4.6 Cementitious Backer Board

Cementitious backer units shall comply with ANSI A118.9.

2.5 MARBLE THRESHOLDS

Marble thresholds shall be of size required by drawings or conditions. Marble shall be Group A as classified by MIA-01. Marble shall have a fine sand-rubbed finish and shall be white in color as approved by the Contracting Officer. Marble abrasion shall be not less than 12.0 when tested in accordance with ASTM C 241.

PART 3 EXECUTION

3.1 PREPARATORY WORK AND WORKMANSHIP

Surface to receive tile shall be inspected and shall conform to the requirements of ANSI A108.1A or ANSI A108.1B for surface conditions for the type setting bed specified and for workmanship. Variations of surface to be tiled shall fall within maximum values shown below:

TYPE	WALLS	FLOORS
Dry-Set Mortar	3 mm in 2.4 meters	3.0 mm in 3 meters
Organic Adhesives	3 mm in 2.4 meters	1.5 mm in 1 meters
Latex portland cement mortar	3 mm in 2.4 meters	3.0 mm in 3 meters
Epoxy	3 mm in 2.4 meters	3.0 mm in 3 meters

3.2 GENERAL INSTALLATION REQUIREMENTS

Tile work shall not be started until roughing in for mechanical and electrical work has been completed and tested, and built-in items requiring membrane waterproofing have been installed and tested. Commencement of installation shall constitute acceptance of substrates. Floor tile installation shall not be started in spaces requiring wall tile until after wall tile has been installed. Tile in colors and patterns indicated shall be applied in the area shown on the drawings. Tile shall be installed with the respective surfaces in true even planes to the elevations and grades shown. Special shapes shall be provided as required for sills, jambs,

recesses, offsets, external corners, and other conditions to provide a complete and neatly finished installation. Tile bases and coves shall be solidly backed with mortar.

3.3 INSTALLATION OF WALL TILE

Wall tile shall be installed in accordance with the TCA-01, method W243-96.

3.3.1 Workable or Cured Mortar Bed

Tile shall be installed over a workable mortar bed or a cured mortar bed at the option of the Contractor. A 0.102 mm polyethylene membrane, metal lath, and scratch coat shall also be installed. Workable mortar bed, materials, and installation of tile shall conform to ANSI A108.1A. Cured mortar bed and materials shall conform to ANSI A108.1B.

3.3.2 Dry-Set Mortar and Latex-Portland Cement Mortar

Dry-set or Latex-portland cement shall be used to install tile in accordance with ANSI A108.5. Latex portland cement shall be used when installing porcelain ceramic tile.

3.3.3 Organic Adhesive

Organic adhesive installation of ceramic tile shall conform to ANSI A108.4.

3.3.4 Furan Mortar and Grout

Furan mortar and grout installation shall conform to ANSI A108.8.

3.4 INSTALLATION OF FLOOR TILE

Floor tile shall be installed in accordance with TCA-01, method F113-96.

3.4.1 Workable or Cured Mortar Bed

Floor tile shall be installed over a workable mortar bed or a cured mortar bed at the option of the Contractor. Workable mortar bed materials and installation shall conform to ANSI A108.1A. Cured mortar bed and materials shall conform to ANSI A108.1B. Joints between quarry tile shall be between 6.35 mm (1/4 inch) and 9.53 mm (3/8 inch) in width and shall be uniform in width.

3.4.2 Dry-Set and Latex-Portland Cement

Dry-set or Latex-portland cement mortar shall be used to install tile directly over properly cured, plane, clean concrete slabs in accordance with ANSI A108.5. Latex portland cement shall be used when installing porcelain ceramic tile.

3.4.3 Ceramic Tile Grout

Ceramic Tile grout shall be prepared and installed in accordance with ANSI A108.10.

3.4.4 Cementitious Backer Board

Cementitious backer units shall be installed in accordance with ANSI A108.11. Fasteners shall be type designed for cement board application.

3.5 INSTALLATION OF MARBLE THRESHOLDS

Thresholds shall be installed where indicated in a manner similar to that of the ceramic tile floor. Thresholds shall be the full width of the opening. Head joints at ends shall not exceed 6 mm in width and shall be grouted full as specified for ceramic tile.

3.6 CONTROL JOINTS

Joints shall be formed as indicated and sealed as specified in Section 07900 JOINT SEALING.

3.6.1 Walls

Control joints shall be provided at control joints in backing material. Wherever backing material changes, a control joint shall be formed to separate the different materials.

3.6.2 Floors

Control joints shall be provided over construction joints, control joints, and expansion joints in concrete slabs. Control joints shall also be provided where tile abuts restraining surfaces such as perimeter walls, curbs and columns and at intervals of 7.2 to 10.8 m each way in large interior floor areas and 3.6 to 4.8 m each way in large exterior areas or areas exposed to direct sunlight or moisture. Expansion joints shall extend through setting-beds and fill.

3.7 CLEANING AND PROTECTING

Upon completion, tile surfaces shall be thoroughly cleaned in accordance with manufacturer's approved cleaning instructions. Acid shall not be used for cleaning glazed tile. Floor tile with resinous grout or with factory mixed grout shall be cleaned in accordance with instructions of the grout manufacturer. After the grout has set, tile wall surfaces shall be given a protective coat of a noncorrosive soap or other approved method of protection. Tiled floor areas shall be covered with building paper before foot traffic is permitted over the finished tile floors. Board walkways shall be laid on tiled floors that are to be continuously used as passageways by workmen. Damaged or defective tiles shall be replaced.

-- End of Section --

SECTION 09445

RESINOUS TERRAZZO FLOORING

PART 1 GENERAL

1.1 REFERENCES

The publications listed below form a part of this specification to the extent referenced. The publications are referred to in the text by basic designation only.

AMERICAN SOCIETY FOR TESTING AND MATERIALS (ASTM)

ASTM D 56 (1996) flash Point by Tag Closed Tester

NATIONAL FIRE PROTECTION ASSOCIATION (NFPA)

NFPA 99 (1996; Errata) Health Care Facilities

NATIONAL TERRAZZO & MOSAIC ASSOCIATION (NTMA)

NTMA-01 (1995) Terrazzo Information Guide

1.2 GENERAL

Resinous terrazzo flooring in the colors indicated shall be applied in the areas shown. Flooring shall be an epoxy terrazzo system that conforms to the requirements specified in paragraphs 2.01A and B of NTMA-01.

1.3 SUBMITTALS

Government approval is required for submittals with a "GA" designation; submittals having an "FIO" designation are for information only. The following shall be submitted in accordance with Section 01330 SUBMITTAL PROCEDURES:

SD-01 Data

Terrazzo Floor System; FIO;AR. Mixing, Proportioning, and Installation; FIO ;AR. Cleaning and Sealing; FIO;AR.

Resin manufacturer's descriptive data, mixing, proportioning, and installation instructions. Maintenance literature for terrazzo cleaning and sealing shall be included.

SD-04 Drawings

Terrazzo Floor System; GA|ED.

Drawings indicating the type, size, and layout of divider strips and control joint strips.

SD-13 Certificates

Terrazzo Floor System; GA|ED.

Certificates indicating conformance with specified requirements. Certificates shall be accompanied by certified test reports showing that the conductive resinous terrazzo floor has been tested and meets the requirements specified.

SD-14 Samples

Terrazzo Floor System; GA|ED.

Two 150 x 150 mm, (minimum) samples of each color of resinous terrazzo and two 150 mm lengths, of each type of strip.

1.4 QUALIFICATION OF APPLICATOR

Applicator shall be approved by the resin manufacturer and shall have a minimum of 3 years experience in the application of the materials to be used and shall have completed 8 successful installations within the past 2 years.

1.5 DELIVERY AND STORAGE

Materials shall be delivered to the project site in manufacturer's original unopened containers. Materials shall be kept in a clean, dry, area with temperatures controlled between 10 to 33 degrees C.

1.6 ENVIRONMENTAL REQUIREMENTS

Areas to receive terrazzo shall be maintained at a temperature above 10 degrees C for 2 days prior to installation and for 7 days following installation.

PART 2 PRODUCTS

2.1 PRIMER

Primer shall be a material recommended by the resin manufacturer which will penetrate the pores of the substrate and bond with the topping to form a permanent monolithic bond between the substrate and the topping.

2.2 RESIN

Resin for the specified terrazzo flooring shall conform to the requirements shown in NTMA-01.

2.3 FILLERS

Fillers, if required, shall be inert mineral or cellulosic material as recommended by the manufacturer and best suited for the resin binder used. Fillers shall be furnished in the quantity necessary to impart the required color and physical characteristics.

2.4 MARBLE CHIPS

Marble chips shall be of domestic origin of sizes and colors to match color plate indicated on the drawings. Chips shall be a range of sizes up to and including the NTMA Standard No. 0 and Standard No. 1 for 6 mm thick floors and Standard No. 0 through Standard No. 2 for 10 mm thick floors.

2.5 STRIPS

2.5.1 Divider Strips

Divider "L" strips shall be depth as required. Consult with epoxy resin manufacturer for the gauge of the brass strips.

2.5.2 Control Joint Strips

Control joint double "L" strips, back to back, shall be depth as required. Consult with epoxy resin manufacturer for the gauge of brass strips and the Neoprene filler thickness.

2.6 GROUT

Grout shall be as recommended by the manufacturer of the resin.

2.7 SEALER

Sealer shall have a pH factor between 7 and 10 and shall be a penetrating type specially prepared for use on terrazzo. The sealer shall not discolor or amber the terrazzo and shall produce a slip resistant surface. Flash point of sealer shall be a minimum of 27 degrees C when tested in accordance with ASTM D 56.

PART 3 EXECUTION

3.1 PREPARATION OF CONCRETE SUBFLOOR

Installation of the floor topping shall not commence until the concrete substrate is at least 28 days old. The concrete surfaces shall be prepared in accordance with the instructions of the resin manufacturer.

3.2 MIXING, PROPORTIONING, AND INSTALLATION

Mixing, proportioning, and installing shall be in accordance with the approved instructions of the manufacturer. Strips shall be installed in locations indicated. The topping shall be applied to give a finish thickness of 10 mm. Bases shall be cove type cast-in-place with 1 inch radius cove and shall be 100 mm high.

3.3 TESTING

Between 30 and 45 days after flooring installation is completed, and prior to its use, the conductive resinous terrazzo flooring shall be tested in accordance with paragraph 12-4.1.3.8(b)(7) of NFPA 99. The resistance of the conductive floor at any one location shall be more than 5,000 ohms in areas with 110 volts service, more than 10,000 ohms in areas with 220 volt service, and average less than 1,000,000 ohms and more than 25,000 ohms in all areas.

3.4 CLEANING AND SEALING

The terrazzo shall be washed with a neutral cleaner and where required shall be cleaned with a fine abrasive to remove any stains or cement smears. The cleaned surfaces shall be rinsed. When dry, a terrazzo sealer shall be applied in accordance with the manufacturer's directions.

3.5 PROTECTION

The terrazzo work shall be covered and protected from damage until completion of the work of all other trades.

-- End of Section --

SECTION 09510

ACOUSTICAL CEILINGS

PART 1 GENERAL

1.1 REFERENCES

The publications listed below form a part of this specification to the extent referenced. The publications are referred to in the text by basic designation only.

AMERICAN SOCIETY FOR TESTING AND MATERIALS (ASTM)

ASTM C 635	(1995) Manufacture, Performance, and Testing of Metal Suspension Systems for Acoustical Tile and Lay-In Panel Ceilings
ASTM C 636	(1992) Installation of Metal Ceiling Suspension Systems for Acoustical Tile and Lay-In Panel Ceilings
ASTM E 119	(1995a) Fire Tests of Building Construction and Materials
ASTM E 1264	(1990) Standard Classification for Acoustical Ceiling Products
ASTM E 1414	(1991a) Standard Test for Airborne Sound Attenuation Between Rooms Sharing a Common Ceiling Plenum.

UNDERWRITERS LABORATORIES (UL)

UL-05	(1996) Fire Resistance Directory

1.2 GENERAL REQUIREMENTS

Acoustical treatment shall consist of sound controlling units mechanically mounted on a ceiling suspension system. The unit size, texture, finish, and color shall be as specified. The location and extent of acoustical treatment shall be as shown on the drawings.

1.2.1 The Use of Recycled and/or Recovered Materials

In compliance with the Resource Conservation Recovery Act, the Contractor shall be responsible for using recycled and/or recovered materials to the maximum extent possible. Recycled materials used shall be reported to the Contracting Officer. The report shall certify use of the recycled material and indicate the percentage of recycled content and the costs of the product.

1.3 SUBMITTALS

Government approval is required for submittals with a "GA" designation; submittals having an "FIO" designation are for information only. The

following shall be submitted in accordance with Section 01330 SUBMITTAL PROCEDURES:

SD-01 Data

Acoustical Ceiling System; GA|ED.

Manufacturer's descriptive data, catalog cuts, and installation instructions.

SD-04 Drawings

Acoustical Ceiling System; GA|ED.

Drawings showing suspension system, method of anchoring and fastening, details, and reflected ceiling plan.

SD-09 Reports

Fire Resistive Ceilings; FIO;AR. Ceiling Attenuation Class and Test; FIO;AR. Use of Recycled/Recovered Materials; FIO;AR.

Reports by an independent testing laboratory attesting that acoustical ceiling systems meet specified fire endurance and sound transmission requirements. Data attesting to conformance of the proposed system to Underwriters Laboratories requirements for the fire endurance rating listed in UL-05 may be submitted in lieu of test reports. Report certifying use of recycled material, indicating percentage of recycled content and costs of the product.

SD-13 Certificates

Acoustical Units; FIO;AR.

Certificate attesting that the mineral based acoustical units furnished for the project contains recycled material and showing an estimated percent of such material.

SD-14 Samples

Acoustical Units; GA|ED.

Two samples of each type of acoustical unit and each type of suspension grid tee section showing texture, finish, and color.

1.4 DELIVERY AND STORAGE

Materials shall be delivered to the site in the manufacturer's original unopened containers with brand name and type clearly marked. Materials shall be carefully handled and stored in dry, watertight enclosures. Immediately before installation, acoustical units shall be stored for not less than 24 hours at the same temperature and relative humidity as the space where they will be installed in order to assure proper temperature and moisture acclimation.

1.5 ENVIRONMENTAL REQUIREMENTS

A uniform temperature of not less than 16 degrees C nor more than 29 degrees C and a relative humidity of not more than 70 percent shall be

maintained before, during, and after installation of acoustical units.

1.6 SCHEDULING

Interior finish work such as plastering, concrete and terrazzo work shall be complete and dry before installation. Mechanical, electrical, and other work above the ceiling line shall be completed and heating, ventilating, and air conditioning systems shall be installed and operating in order to maintain temperature and humidity requirements.

1.7 WARRANTY

Manufacturer's standard performance guarantees or warranties that extend beyond a one year period shall be provided.

1.8 EXTRA MATERIALS

Spare tiles of each color shall be furnished at the rate of 5 tiles for each 1000 tiles installed. Tiles shall be from the same lot as those installed.

PART 2 PRODUCTS

2.1 ACOUSTICAL UNITS

Acoustical units shall conform to ASTM E 1264, Class A, and the following requirements:

2.1.1 Units for Exposed-Grid System

Type: III (mineral fiber with painted finish) Form 2, Class 25. Type III acoustical units shall have a minimum recycled material content of 18 percent.

Minimum NRC: 0.55 when tested on mounting No. E-400
Pattern: E/F Medium Texture.
Nominal size: 600 x 600 x 16 mm.
Edge detail: Square.
Finish: Factory-applied color finish, see COLOR SCHEDULE.
Minimum LR coefficient: 0.70.
Minimum CAC: 40.

2.2 SUSPENSION SYSTEM

Suspension system shall be exposed-grid standard width flange as shown on drawings, and shall conform to ASTM C 635 for intermediate-duty systems. Surfaces exposed to view shall be aluminum or steel with a factory-applied color baked-enamel finish, see the COLOR SCHEDULE. Wall molding shall have a flange of not less than 23 mm. Inside and outside corner caps shall be provided.

2.3 HANGERS

Hangers shall be galvanized steel wire. Hangers and attachment shall support a minimum 1330 N ultimate vertical load without failure of supporting material or attachment.

2.4 ACCESS PANELS

Access panels shall match adjacent acoustical units and shall be designed and equipped with suitable framing and fastenings for removal and replacement without damage. Panel shall be not less than one tile module nor more than that of two tiles. An identification plate of 0.8 mm thick aluminum, 19 mm in diameter, stamped with the letters "AP" and finished the same as the unit, shall be attached near one corner on the face of each access panel.

2.5 FIRE RESISTIVE CEILINGS

Acoustical ceiling systems indicated as fire resistant shall be rated for fire endurance as indicated when tested in accordance with ASTM E 119. Suspended ceiling shall have been tested with a specimen roof or floor assembly representative of the indicated construction, including mechanical and electrical work within ceiling space openings for light fixtures, and air outlets, and access panels. Ceiling assembly rating shall be as shown on drawings.

2.6 FINISHES

Acoustical units and suspension system members shall have manufacturer's standard textures, patterns and finishes as specified. Ceiling suspension system components shall be treated to inhibit corrosion.

2.7 COLORS AND PATTERNS

Colors and patterns for acoustical units and suspension system components shall be as indicated in the COLOR SCHEDULE.

2.8 CEILING ATTENUATION CLASS AND TEST

Ceiling attenuation class (CAC) range of acoustical units, when required, shall be determined in accordance with ASTM E 1414. Test ceiling shall be continuous at the partition and shall be assembled in the suspension system in the same manner that the ceiling will be installed on the project. System shall be tested with all acoustical units installed.

PART 3 EXECUTION

3.1 INSTALLATION

Acoustical work shall be provided complete with necessary fastenings, clips, and other accessories required for a complete installation. Mechanical fastenings shall not be exposed in the finished work. Hangers shall be laid out for each individual room or space. Hangers shall be placed to support framing around beams, ducts, columns, grilles, and other penetrations through ceilings. Main runners and carrying channels shall be kept clear of abutting walls and partitions. At least two main runners shall be provided for each ceiling span. Wherever required to bypass an object with the hanger wires, a subsuspension system shall be installed, so that all hanger wires will be plumb. Lighting fixtures shall be suspended/supported independently fo the ceiling grid.

3.1.1 Suspension System

Suspension system shall be installed in accordance with ASTM C 636 and as specified herein. There shall be no hanger wires or other loads suspended from underside of steel decking.

3.1.1.1 Plumb Hangers

Hangers shall be plumb and shall not press against insulation covering ducts and pipes.

3.1.1.2 Splayed Hangers

Where hangers must be splayed (sloped or slanted) around obstructions, the resulting horizontal force shall be offset by bracing, countersplaying, or other acceptable means.

3.1.2 Wall Molding

Wall molding shall be provided where ceilings abut vertical surfaces. Wall molding shall be secured not more than 75 mm from ends of each length and not more than 400 mm on centers between end fastenings. Wall molding springs shall be provided at each acoustical unit in semi-exposed or concealed systems.

3.1.3 Acoustical Units

Acoustical units shall be installed in accordance with the approved installation instructions of the manufacturer. Edges of acoustical units shall be in close contact with metal supports, with each other, and in true alignment. Acoustical units shall be arranged so that units less than one-half width are minimized. Measure each ceiling area and establish layout of acoustical units to balance border widths at opposite edges of each ceiling space, unless otherwise noted on the drawings. Units in exposed-grid system shall be held in place with manufacturer's standard hold-down clips, if units weigh less than 5 kg per square m or if required for fire resistance rating.

3.2 CEILING ACCESS PANELS

Ceiling access panels shall be located directly under the items which require access.

3.3 CLEANING

Following installation, dirty or discolored surfaces of acoustical units shall be cleaned and left free from defects. Units that are damaged or improperly installed shall be removed and new units provided as directed by the Contracting Officer.

-- End of Section --

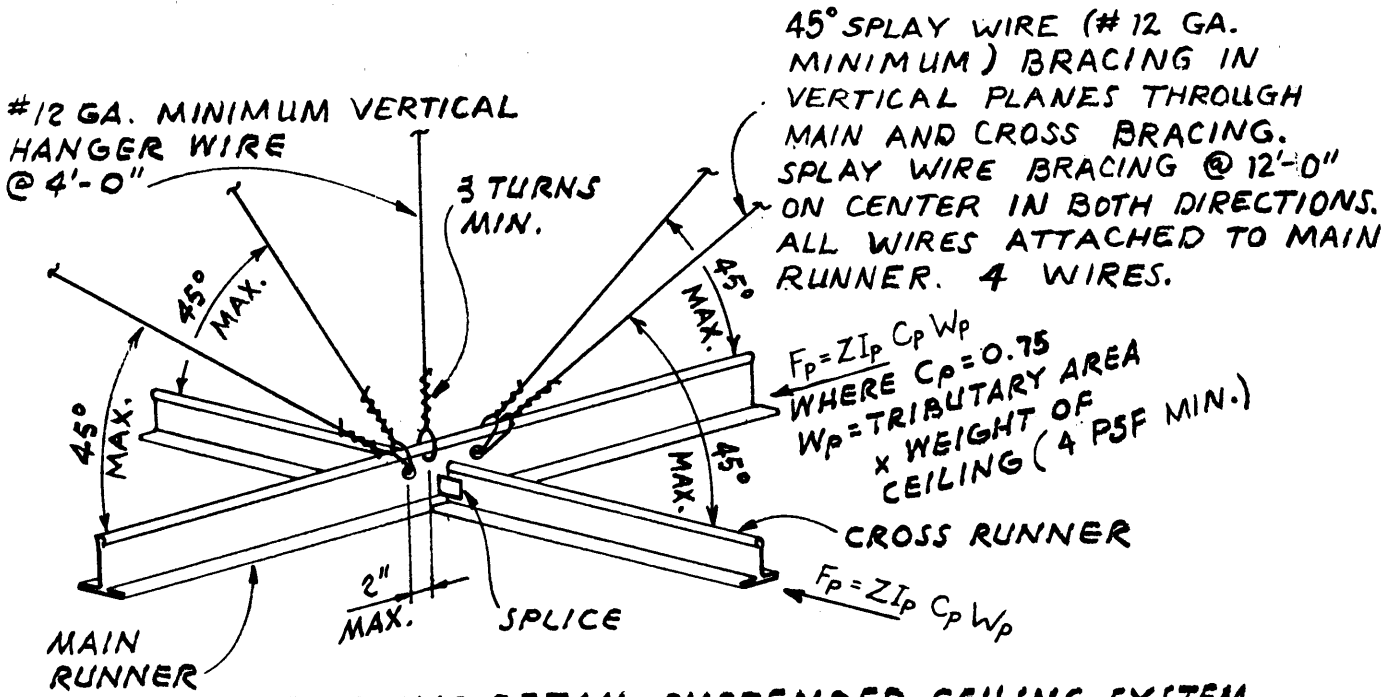

TYP. SPLAY BRACING DETAIL-SUSPENDED CEILING SYSTEM

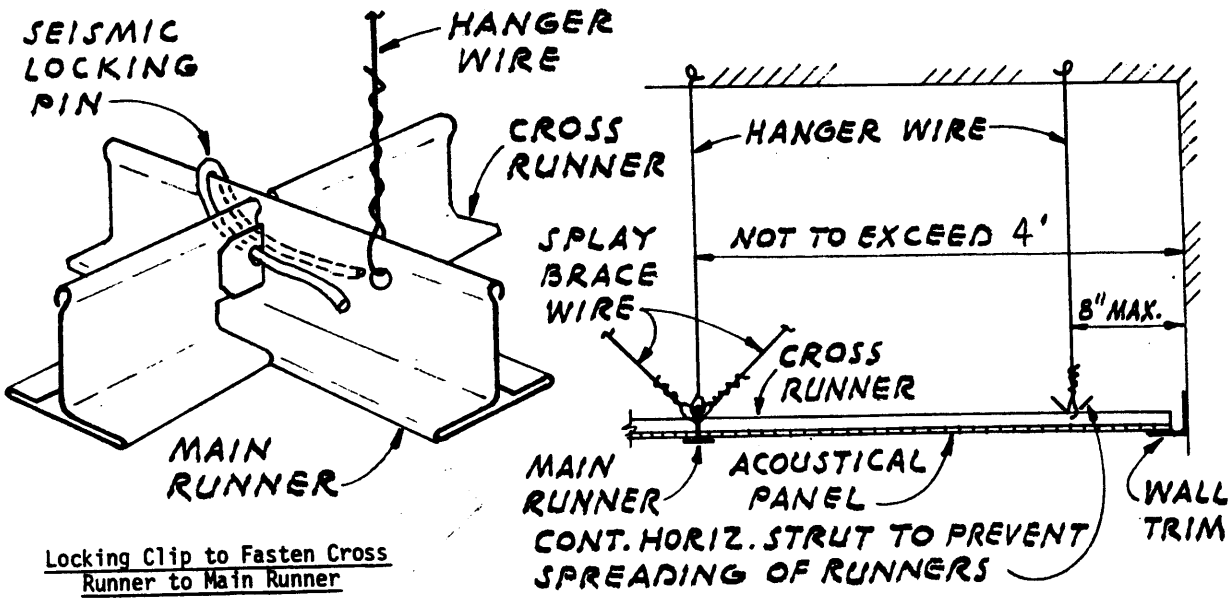

Locking Clip to Fasten Cross Runner to Main Runner

Splices and intersections of runners shall be attached with mechanical interlocking connectors such as pop rivets, screws, pins, plates with bent tabs, or other approved connectors. Design connectors for 2 x design load or ultimate axial tension or compression (minimum 120 pounds).

SUSPENDED CEILING DETAIL AT WALL

Note: THE DETAILS IN THIS FIGURE APPLY ONLY IN SEISMIC ZONES 2, 3, AND 4.

Figure 11-4. Suspended acoustical tile ceiling.

SECTION 09520

ACOUSTICAL WALL TREATMENT

PART 1 GENERAL

1.1 REFERENCES

The publications listed below form a part of this specification to the extent referenced. The publications are referred to in the text by basic designation only.

AMERICAN ASSOCIATION OF TEXTILE CHEMISTS AND COLORISTS (AATCC)

AATCC TM-16	(1993) Test Method: Colorfastness to Light

AMERICAN SOCIETY FOR TESTING AND MATERIALS (ASTM)

ASTM C 423	(1990a) Sound Absorption and Sound Absorption Coefficients by the Reverberation Room Method
ASTM D 1117	(1995) Nonwoven Fabrics
ASTM D 2262	(1983) Tearing Strength of Woven Fabric by the Tongue (Single Rip) Method (Constant-Rate-of-Traverse Tensile Testing Machine)
ASTM D 5034	(1995) Breaking Strength and Elongation of Textile Fabrics (Grab Test)
ASTM E 84	(1996a) Surface Burning Characteristics of Building Materials

INTERNATIONAL CONFERENCE OF BUILDING OFFICIALS (ICBO)

ICBO-01	(1994) Uniform Building Code (3 Vol)

1.2 SUBMITTALS

Government approval is required for submittals with a "GA" designation; submittals having an "FIO" designation are for information only. The following shall be submitted in accordance with Section 01330 SUBMITTAL PROCEDURES:

SD-01 Data

Acoustical Wall Panels; GA|ED.

Manufacturer's descriptive data and catalog cuts.

SD-04 Drawings

Acoustical Wall Panels; GA|ED.

Drawings showing plan locations, elevations and details. Drawings shall include details of method of anchorage, location of doors and other openings, base detail and shape and thickness of materials.

SD-06 Instructions

Acoustical Wall Panels; FIO;AR.

Manufacturer's installation instructions and recommended cleaning instructions.

SD-13 Certificates

Acoustical Wall Panels; FIO;AR.

Certificates of compliance from an independent laboratory accredited by the National Laboratory Accreditation Program of the National Institute of Standards. A label or listing from the testing laboratory will be acceptable evidence of compliance.

SD-14 Samples

Acoustical Wall Panels; GA|ED.

Manufacturer's standard fabric swatches, minimum 450 mm wide by 600 mm long, 2 samples of each color range specified.

1.3 DELIVERY AND STORAGE

Materials delivered and placed in storage shall be stored with protection from the weather, humidity and temperature variations, dirt, dust, or other contaminants.

1.4 WARRANTY

Manufacturer's standard performance guarantees or warranties that extend beyond a one year period shall be provided.

PART 2 PRODUCTS

2.1 FABRIC COVERED ACOUSTICAL WALL PANELS

Acoustical wall panels shall consist of prefinished factory assembled, seamless fabric covered, fiber glass or mineral fiber core system as described below. Wall panels shall be manufactured to the dimensions and configurations shown on the drawings. Perimeter edges shall be [non-reinforced.] [reinforced by either an aluminum frame or a formulated resin edge hardener.] Acoustical wall panels installed in non-sprinklered areas must comply with the requirements of ICBO-01, Standard 42-2.

a. Panel Width: Widths shall be 1200 mm.

b. Panel Height: Heights shall be 3000 mm.

c. Thickness: 9.53 mm.

d. Fabric Covering: Seamless embossed texture, polyester, minimum 0.034 kg per linear meter. Tear strength shall be minimum 110 N machine direction and minimum 178 N cross-machine direction in

accordance with ASTM D 1117. Tensile strength shall be minimum 220 N machine direction and minimum 330 N cross-machine direction in accordance with ASTM D 5034. Tear strength shall be minimum 129 N in accordance with ASTM D 2262. Tensile strength shall be 667 N minimum in accordance with ASTM D 5034. Fabric covering shall be stretched free of wrinkles and then bonded to the edges and back or bonded directly to the panel face, edges, and back of panel a minimum distance standard with the manufacturer. Light fastness (fadeometer) shall be approximately 40 hours in accordance with AATCC TM-16.

e. Fire rating for the complete composite system: Class A, 200 or less smoke density and flame spread less than 25, when tested in accordance with ASTM E 84.

f. Substrate: Fiber glass or mineral fiber.

g. Noise Reduction Coefficient (NRC) Range: 0.80-0.90 ASTM C 423.

h. Edge Detail: Bevel edge.

i. Core Type: Standard acoustical core.

J. Mounting: Acoustical panels shall be mounted by manufacturer's standard concealed spline adhesive and mounting hardware.

k. Color: Color shall be as indicated on the drawings.

PART 3 EXECUTION

3.1 SURFACE CONDITIONS

Walls shall be clean, smooth, oil free and prepared in accordance with panel manufacturer's instructions. Installation shall not begin until all wet work, such as, plastering, painting, and concrete are completely dry.

3.2 INSTALLATION

Panel installation shall be by personnel familiar with and normally engaged in installation of acoustical wall panels. Panels shall be applied in accordance with the manufacturer's installation instructions.

3.3 CLEANING

Following installation, dirty or stained panel surfaces shall be cleaned in accordance with manufacturer's instructions and left free from defects. Panels that are damaged, discolored, or improperly installed shall be removed and new panels provided as directed.

-- End of Section --

SECTION 09520

ACOUSTICAL WALL TREATMENT

PART 1 GENERAL

1.1 REFERENCES

The publications listed below form a part of this specification to the extent referenced. The publications are referred to in the text by basic designation only.

AMERICAN ASSOCIATION OF TEXTILE CHEMISTS AND COLORISTS (AATCC)

AATCC TM-16	(1993) Test Method: Colorfastness to Light

AMERICAN SOCIETY FOR TESTING AND MATERIALS (ASTM)

ASTM C 423	(1990a) Sound Absorption and Sound Absorption Coefficients by the Reverberation Room Method
ASTM D 1117	(1995) Nonwoven Fabrics
ASTM D 2262	(1983) Tearing Strength of Woven Fabric by the Tongue (Single Rip) Method (Constant-Rate-of-Traverse Tensile Testing Machine)
ASTM D 5034	(1995) Breaking Strength and Elongation of Textile Fabrics (Grab Test)
ASTM E 84	(1996a) Surface Burning Characteristics of Building Materials

INTERNATIONAL CONFERENCE OF BUILDING OFFICIALS (ICBO)

ICBO-01	(1994) Uniform Building Code (3 Vol)

1.2 SUBMITTALS

Government approval is required for submittals with a "GA" designation; submittals having an "FIO" designation are for information only. The following shall be submitted in accordance with Section 01330 SUBMITTAL PROCEDURES:

SD-01 Data

Acoustical Wall Panels; GA|ED.

Manufacturer's descriptive data and catalog cuts.

SD-04 Drawings

Acoustical Wall Panels; GA|ED.

Drawings showing plan locations, elevations and details. Drawings shall include details of method of anchorage, location of doors and other openings, base detail and shape and thickness of materials.

SD-06 Instructions

Acoustical Wall Panels; FIO;AR.

Manufacturer's installation instructions and recommended cleaning instructions.

SD-13 Certificates

Acoustical Wall Panels; FIO;AR.

Certificates of compliance from an independent laboratory accredited by the National Laboratory Accreditation Program of the National Institute of Standards. A label or listing from the testing laboratory will be acceptable evidence of compliance.

SD-14 Samples

Acoustical Wall Panels; GA|ED.

Manufacturer's standard fabric swatches, minimum 450 mm wide by 600 mm long, 2 samples of each color range specified.

1.3 DELIVERY AND STORAGE

Materials delivered and placed in storage shall be stored with protection from the weather, humidity and temperature variations, dirt, dust, or other contaminants.

1.4 WARRANTY

Manufacturer's standard performance guarantees or warranties that extend beyond a one year period shall be provided.

PART 2 PRODUCTS

2.1 FABRIC COVERED ACOUSTICAL WALL PANELS

Acoustical wall panels shall consist of prefinished factory assembled, seamless fabric covered, fiber glass or mineral fiber core system as described below. Wall panels shall be manufactured to the dimensions and configurations shown on the drawings. Perimeter edges shall be [non-reinforced.] [reinforced by either an aluminum frame or a formulated resin edge hardener.] Acoustical wall panels installed in non-sprinklered areas must comply with the requirements of ICBO-01, Standard 42-2.

a. Panel Width: Widths shall be 1200 mm.

b. Panel Height: Heights shall be 3000 mm.

c. Thickness: 9.53 mm.

d. Fabric Covering: Seamless embossed texture, polyester, minimum 0.034 kg per linear meter. Tear strength shall be minimum 110 N machine direction and minimum 178 N cross-machine direction in

accordance with ASTM D 1117. Tensile strength shall be minimum 220 N machine direction and minimum 330 N cross-machine direction in accordance with ASTM D 5034. Tear strength shall be minimum 129 N in accordance with ASTM D 2262. Tensile strength shall be 667 N minimum in accordance with ASTM D 5034. Fabric covering shall be stretched free of wrinkles and then bonded to the edges and back or bonded directly to the panel face, edges, and back of panel a minimum distance standard with the manufacturer. Light fastness (fadeometer) shall be approximately 40 hours in accordance with AATCC TM-16.

e. Fire rating for the complete composite system: Class A, 200 or less smoke density and flame spread less than 25, when tested in accordance with ASTM E 84.

f. Substrate: Fiber glass or mineral fiber.

g. Noise Reduction Coefficient (NRC) Range: 0.80-0.90 ASTM C 423.

h. Edge Detail: Bevel edge.

i. Core Type: Standard acoustical core.

J. Mounting: Acoustical panels shall be mounted by manufacturer's standard concealed spline adhesive and mounting hardware.

k. Color: Color shall be as indicated on the drawings.

PART 3 EXECUTION

3.1 SURFACE CONDITIONS

Walls shall be clean, smooth, oil free and prepared in accordance with panel manufacturer's instructions. Installation shall not begin until all wet work, such as, plastering, painting, and concrete are completely dry.

3.2 INSTALLATION

Panel installation shall be by personnel familiar with and normally engaged in installation of acoustical wall panels. Panels shall be applied in accordance with the manufacturer's installation instructions.

3.3 CLEANING

Following installation, dirty or stained panel surfaces shall be cleaned in accordance with manufacturer's instructions and left free from defects. Panels that are damaged, discolored, or improperly installed shall be removed and new panels provided as directed.

-- End of Section --

SECTION 09650

RESILIENT FLOORING

PART 1 GENERAL

1.1 REFERENCES

The publications listed below form a part of this specification to the extent referenced. The publications are referred to in the text by basic designation only.

AMERICAN SOCIETY FOR TESTING AND MATERIALS (ASTM)

ASTM D 4078	(1992; R 1996) Water Emulsion Floor Polish
ASTM F 1066	(1995a) Vinyl Composition Floor Tile

FEDERAL SPECIFICATIONS (FS)

FS SS-T-312	(Rev B; Int Am 1; Notice 1) Tile, Floor: Asphalt, Rubber, Vinyl, and Vinyl Composition

1.2 SUBMITTALS

Government approval is required for submittals with a "GA" designation; submittals having an "FIO" designation are for information only. The following shall be submitted in accordance with Section 01330 SUBMITTAL PROCEDURES:

SD-01 Data

Resilient Flooring and Accessories; GA|ED.

Manufacturer's descriptive data and installation instructions including cleaning and maintenance instructions.

SD-09 Reports

Resilient Flooring and Accessories; FIO;AR.

Copies of test reports showing that representative product samples of the flooring proposed for use have been tested by an independent testing laboratory within the past three years or when formulation change occurred and conforms to the requirements specified.

SD-14 Samples

Resilient Flooring and Accessories; GA|ED.

Three samples of each indicated color and type of flooring and base. Sample size shall be minimum 60 by 100 mm.

1.3 DELIVERY AND STORAGE

Materials shall be delivered to the building site in original unopened containers bearing the manufacturer's name, project identification, and handling instructions. Materials shall be stored in a clean dry area with temperature maintained above 21 degrees C for 2 days prior to installation, and shall be stacked according to manufacturer's recommendations. Materials shall be protected from the direct flow of heat from hot-air registers, radiators and other heating fixtures and appliances.

1.4 ENVIRONMENTAL REQUIREMENTS

Areas to receive resilient flooring shall be maintained at a temperature above 21 degrees C and below 38 degrees C for 2 days before application, during application and 2 days after application. A minimum temperature of 13 degrees C shall be maintained thereafter.

1.5 SCHEDULING

Resilient flooring application shall be scheduled after the completion of other work which would damage the finished surface of the flooring.

1.6 WARRANTY

Manufacturer's standard performance guarantees or warranties that extend beyond a one year period shall be provided.

1.7 EXTRA MATERIALS

Extra flooring material of each color and pattern shall be furnished at the rate of 5 tiles for each 1000 tiles and 0.5 square meters for each 92 square meters of sheet flooring installed. Extra materials shall be from the same lot as those installed. Extra base material composed of 6 m of each color shall be furnished.

PART 2 PRODUCTS

2.1 VINYL-COMPOSITION TILE

Vinyl-composition tile shall conform to ASTM F 1066, Class 1, (solid color tile), Class 2,(through pattern tile), Composition 1, asbestos-free, and shall be 300 mm square and 3.2 mm thick. Tile shall have the color and pattern uniformly distributed throughout the thickness of the tile. Flooring in any one continuous area shall be from the same lot and shall have the same shade and pattern.

2.2 SOLID VINYL TILE

Solid vinyl tile shall conform to FS SS-T-312 Type III. Tile shall be 300 mm square by 3 mm thick. Tiles shall be of solid unlaminated construction.

2.3 RESILIENT BASE

Base shall be manufacturers standard vinyl, coved style (installed with resilient flooring) butt toe cove (installed with 3 mm thick flooring). Base shall be 100 mm high and a minimum 3 mm thick. Preformed outside corners shall be furnished.

2.4 FEATURE STRIP

Feature strips shall be vinyl, 25 mm wide, and of thickness to match the flooring. Color shall be as indicated.

2.5 ADHESIVE

Adhesive for flooring and wall base shall be as recommended by the flooring manufacturer.

2.6 POLISH

Polish shall conform to ASTM D 4078.

2.7 CAULKING AND SEALANTS

Caulking and sealants shall be in accordance with Section 07900 JOINT SEALING.

2.8 MANUFACTURER'S COLOR AND TEXTURE

Color and texture shall be as indicated on the drawings.

PART 3 EXECUTION

3.1 EXAMINATION/VERIFICATION OF CONDITIONS

The Contractor shall examine and verify that site conditions are in agreement with the design package and shall report all conditions that will prevent a proper installation. The Contractor shall not take any corrective action without written permission from the Government.

3.2 SURFACE PREPARATION

Flooring shall be in a smooth, true, level plane, except where indicated as sloped. Before any work under this section is begun, all defects such as rough or scaling concrete, low spots, high spots, and uneven surfaces shall have been corrected, and all damaged portions of concrete slabs shall have been repaired as recommended by the flooring manufacturer. Concrete curing compounds, other than the type that does not adversely affect adhesion, shall be entirely removed from the slabs. Paint, varnish, oils, release agents, sealers, waxers, and adhesives shall be removed, as recommended by the flooring manufacturer. Commencement of installation shall constitute acceptance of th substrate.

3.3 MOISTURE TEST

The suitability of the concrete subfloor for receiving the resilient flooring with regard to moisture content shall be determined by a moisture test as recommended by the flooring manufacturer.

3.4 INSTALLATION OF VINYL-COMPOSITION TILE AND SOLID VINYL TILE

Tile flooring shall be installed with adhesive in accordance with the manufacturer's installation instructions. Tile lines and joints shall be kept square, symmetrical, tight, and even. Edge width shall vary as necessary to maintain full-size tiles in the field, but no edge tile shall be less than one-half the field tile size, except where irregular shaped rooms make it impossible. Flooring shall be cut to, and fitted around, all permanent fixtures, built-in furniture and cabinets, pipes, and outlets.

Edge tile shall be cut, fitted, and scribed to walls and partitions after field flooring has been applied.

3.5 INSTALLATION OF FEATURE STRIPS

Edge strips shall be secured with adhesive as recommended by the manufacturer. Edge strips shall be provided at locations where flooring termination is higher than the adjacent finished flooring, except at doorways where thresholds are provided.

3.6 INSTALLATION OF RESILIENT BASE

Wall base shall be installed with adhesive in accordance with the manufacturer's written instructions. Base joints shall be tight and base shall be even with adjacent resilient flooring. Voids along the top edge of base at masonry walls shall be filled with caulk.

3.7 CLEANING

Immediately upon completion of installation of tile in a room or an area, flooring and adjacent surfaces shall be cleaned to remove all surplus adhesive. After installation, flooring shall be washed with a cleaning solution, rinsed thoroughly with clear cold water, and, except for raised pattern rubber flooring, rubber tile and sheet rubber flooring, rubber stair treads, and static control vinyl tile, given two coats of polish in accordance with manufacturers written instructions. After each polish coat, floors shall be buffed to an even luster with an electric polishing machine. Raised pattern rubber flooring, rubber tile and sheet rubber flooring, rubber stair treads, and static control vinyl tile shall be cleaned and maintained as recommended by the manufacturer.

3.8 PROTECTION

From the time of laying until acceptance, flooring shall be protected from damage as recommended by the flooring manufacturer. Flooring which becomes damaged, loose, broken, or curled shall be removed and replaced.

-- End of Section --

SECTION 09680

CARPET

PART 1 GENERAL

1.1 REFERENCES

The publications listed below form a part of this specification to the extent referenced. The publications are referred to in the text by basic designation only.

AMERICAN ASSOCIATION OF TEXTILE CHEMISTS AND COLORISTS (AATCC)

AATCC TM-16	(1993) Test Method: Colorfastness to Light
AATCC TM-134	(1991) Test Method: Electrostatic Propensity of Carpets
AATCC TM-165	(1993) Test Method: Colorfastness to Crocking: Carpets - AATCC Crockmeter Method

AMERICAN SOCIETY FOR TESTING AND MATERIALS (ASTM)

ASTM D 418	(1993) Pile Yarn Floor Covering Construction
ASTM D 3278	(1989) Test Methods for Flash Point of Liquids by Setaflash Closed-Cup Apparatus
ASTM E 648	(1996a) Critical Radiant Flux of Floor-Covering Systems Using a Radiant Heat Energy Source

CARPET AND RUG INSTITUTE (CRI)

CRI 104	(1994) Commercial Carpet Installation Standard

CODE OF FEDERAL REGULATIONS (CFR)

16 CFR 1630	Standard for the Surface Flammability of Carpet and Rugs

GERMANY INSTITUTE FOR STANDARDIZATION (DEUTSCHES INSTITUTE FUR NORMUNG) (DIN)

DIN 54318	(1986) Machine-Made Textile Floor Coverings; Determination of Dimensional Changes Due to the Effects of Varied Water and Heat Conditions; Identical with ISO 2551 Edition 1981

1.2 SUBMITTALS

Government approval is required for submittals with a "GA" designation; submittals having an "FIO" designation are for information only. The following shall be submitted in accordance with Section 01330 SUBMITTAL PROCEDURES:

SD-01 Data

Carpet and Accessories; FIO;AR.

Manufacturer's catalog data and printed documentation stating physical characteristics, durability, resistance to fading, and flame resistance characteristics for each type of carpet material and installation accessory.

SD-04 Drawings

Installation; GA|ED.

Three copies of drawings indicating areas receiving carpet, carpet types, textures and patterns, direction of pile, location of seams, and locations of edge molding.

SD-06 Instructions

Carpet and Accessories; FIO;AR.

Three copies of the manufacturer's printed installation instructions for the carpet, including preparation of substrate, seaming techniques, and recommended adhesives and tapes.

SD-09 Reports

Moisture and Alkalinity Tests; FIO;AR.

Three copies of test reports of moisture and alkalinity content of concrete slab stating date of test, person conducting the test, and the area tested.

SD-13 Certificates

Carpet and Accessories; FIO;AR.

Certificates of compliance from a laboratory accredited by the National Laboratory Accreditation Program of the National Institute of Standards and Technology attesting that each type of carpet and carpet with cushion material conforms to the standards specified.

SD-14 Samples

Carpet and Accessories; GA|ED.

a. Carpet: Two "Production Quality" samples 675 x 450 mm of each carpet proposed for use, showing quality, pattern, and color specified.

b. Vinyl or Aluminum Moldings: Two pieces of each type at least 300 mm.

c. Special Treatment Materials: Two samples showing system and installation method.

SD-19 Operation and Maintenance Manuals

Carpet and Accessories; FIO;AR.

Three copies of carpet manufacturer's maintenance instructions describing recommended type of cleaning equipment and material, spotting and cleaning methods, and cleaning cycles.

1.3 REGULATORY REQUIREMENTS

Carpet and adhesives shall bear the Carpet and Rug Institute (CRI) Indoor Air Quality (IAQ) label. Carpet type bearing the label will indicate that the carpet has been tested and meets the criteria of the CRI IAQ Carpet Testing Program, and minimizes the impact on indoor air quality.

1.4 DELIVERY AND STORAGE

Materials shall be delivered to the site in the manufacturer's original wrappings and packages clearly labeled with the manufacturer's name, brand name, size, dye lot number, and related information. Materials shall be stored in a clean, dry, well ventilated area, protected from damage and soiling, and shall be maintained at a temperature above 16 degrees C for 2 days prior to installation.

1.5 ENVIRONMENTAL REQUIREMENTS

Areas in which carpeting is to be installed shall be maintained at a temperature above 16 degrees C for 2 days before installation, during installation, and for 2 days after installation. A minimum temperature of 13 degrees C shall be maintained thereafter for the duration of the contract. Traffic or movement of furniture or equipment in carpeted area shall not be permitted for 24 hours after installation. Other work which would damage the carpet shall be completed prior to installation of carpet.

1.6 WARRANTY

Manufacturer's standard performance guarantees or warranties that extend beyond a one-year period shall be provided.

1.7 EXTRA MATERIAL

Extra material from same dye lot consisting of uncut carpet tiles shall be provided for future maintenance. A minimum of 7 percent of total square meters of each carpet type, pattern, and color shall be provided.

PART 2 PRODUCTS

2.1 CARPET TYPES

2.1.1 F1 and F2

Color, texture, and pattern as indicated on the drawings.

Carpet shall be first quality; free of visual blemishes, streaks, poorly dyed areas, fuzzing of pile yarn, spots or stains, and other physical and manufacturing defects. Carpet materials and treatments shall be reasonably nonallergenic and free of other recognized health hazards. All grade carpets shall have a static control construction which gives adequate durability and performance.

Physical Characteristics

Carpet shall comply with the following:

a. Carpet Construction: Tufted.

b. Type: Modular tile 450 x 450 mm square with 0.15 percent growth/shrink rate in accordance with DIN 54318.

c. Textured Loop.

d. Dupont Antron Legacy Nylon.

e. Pile or Wire Height: Minimum 4.8 mm in accordance with ASTM D 418.

f. Gauge: Minimum 504 mm in accordance with ASTM D 418.

g. Stitches Wires: Minimum 466 per square meter.

h. Face Weight: Minimum 949.48 gm per square meter. This does not include weight of backings. Weight shall be determined in accordance with ASTM D 418.

i. Total Weight: Minimum 4966.12 gm per square meter..

j. Dye Method: Yarn dyed.

k. Backing Materials: Primary backing materials shall be those customarily used and accepted by the trade for each polypropylene carpet. Secondary backing to suit project requirements shall be those customarily used and accepted by the trade for each type of carpet, except when a special unitary back designed for gluedown is provided.

l. Fiber Treatment: Dupont Duratech.

m. Pattern, Texture, and Color: As indicated on the drawings.

2.1.2 F3

Color, texture, and pattern as indicated on the drawings.

Carpet shall be first quality; free of visual blemishes, streaks, poorly dyed areas, fuzzing of pile yarn, spots or stains, and other physical and manufacturing defects. Carpet materials and treatments shall be reasonably nonallergenic and free of other recognized health hazards. All grade carpets shall have a static control construction which gives adequate durability and performance.

Physical Characteristics

Carpet shall comply with the following:

a. Carpet Construction: Tufted.

b. Type: Modular tile 450 x 450 mm square with 0.15 percent growth/shrink rate in accordance with DIN 54318.

c. Pile Type: Multilevel loop.

d. Pile Fiber: Dupont Antron Legacy Nylon.

e. Pile or Wire Height: Minimum 3.55 mm in accordance with ASTM D 418.

f. Gauge: Minimum 504 mm in accordance with ASTM D 418.

g. Stitches: Minimum 33.1/10 per gm 10 cm per square meter.

h. Face Weight: Minimum 678 gm per square meter. This does not include weight of backings. Weight shall be determined in accordance with ASTM D 418.

i. Total Weight: Minimum 4694.84 gm/m_2.

j. Dye Method: Yarn dyed.

k. Backing Materials: Primary backing materials shall be those customarily used and accepted by the trade for polypropylene carpet. Secondary backing to suit project requirements shall be those customarily used and accepted by the trade for each type of carpet, except when a special unitary back designed for gluedown is provided.

l. Fibertreatment: Dupont Duratech.

m. Pattern, Texture, and Color: As indicated on the drawings.

2.1.3 Performance Requirements

a. Static Control: Static control shall be provided to permanently control static buildup to less than 3.5 kV when tested at 20 percent relative humidity and 21 degrees C in accordance with AATCC TM-134.

b. Flammability and Critical Radiant Flux Requirements: Carpet shall comply with 16 CFR 1630. Carpet in corridors and exits shall have a minimum average critical radiant flux of 0.22 watts per square centimeter when tested in accordance with ASTM E 648.

c. Tuft Bind: Tuft bind force required to pull a tuft or loop free from carpet backing shall be a minimum 40 N average force for loop pile.

e. Colorfastness to Crocking: Dry and wet crocking shall comply with AATCC TM-165 and shall have a minimum rating of step 4 on the AATCC Color Transference Chart for all colors.

f. Colorfastness to Light: Colorfastness to light shall comply with AATCC TM-16 and shall have a minimum 4 grey scale rating after 40 hours.

g. Delamination Strength: Delamination strength for tufted carpet with a secondary back shall be minimum of 440 N/m

2.2 ADHESIVES AND CONCRETE PRIMER

Adhesives and concrete primers for installation of carpet shall be waterproof, nonflammable, meet local air-quality standards, and shall be as recommended by the carpet manufacturer. Seam adhesive shall be waterproof, nonflammable, and nonstaining as recommended by the carpet manufacturer. Release adhesive for modular tile carpet shall be as recommended by the carpet manufacturer. Adhesives flashpoint shall be minimum 60 degrees C in accordance with ASTM D 3278.

2.3 MOLDING

Vinyl molding shall be heavy-duty and designed for the type of carpet being installed. Floor flange shall be a minimum 50 mm wide. Color shall be as indicated on the COLOR SCHEDULE.

2.4 TAPE

Tape for seams shall be as recommended by the carpet manufacturer for the type of seam used in installation.

2.5 COLOR, TEXTURE, AND PATTERN

Color, texture, and pattern shall be in accordance with the COLOR SCHEDULE.

PART 3 EXECUTION

3.1 SURFACE PREPARATION

Carpet shall not be installed on surfaces that are unsuitable and will prevent a proper installation. Holes, cracks, depressions, or rough areas shall be repaired using material recommended by the carpet or adhesive manufacturer. Floor shall be free of any foreign materials and swept broom clean. Before beginning work, subfloor shall be tested with glue and carpet to determine "open time" and bond. Commencement of installation shall constitute acceptance of the substrate.

3.2 MOISTURE AND ALKALINITY TEST

Concrete slab shall be tested for moisture content and excessive alkalinity in accordance with CRI 104. The moisture content shall not exceed a hygrometer reading of 65 percent.

3.3 INSTALLATION

Installation shall be in accordance with the manufacturer's instructions and CRI 104. Edges of carpet meeting hard surface flooring shall be protected with molding. Installation shall be in accordance with the molding manufacturer's instructions.

3.3.1 Modular Tile Installation

Modular tiles shall be installed with release adhesive and shall be snugly jointed together. Tiles shall be laid in the same direction with accessibility to the subfloor where required.

3.4 CLEANING AND PROTECTION

3.4.1 Cleaning

After installation of the carpet, debris, scraps, and other foreign matter

shall be removed. Soiled spots and adhesive shall be removed from the face of the carpet with appropriate spot remover. Protruding face yarn shall be cut off and removed. Carpet shall be vacuumed clean.

3.4.2 Protection

The installed carpet shall be protected from soiling and damage with heavy, reinforced, nonstaining kraft paper, plywood, or hardboard sheets. Edges of kraft paper protection shall be lapped and secured to provide a continuous cover. Traffic shall be restricted for at least 45 hours. Protective covering shall be removed when directed by the Contracting Officer.

3.5 REMNANTS

Remnants remaining from the installation, consisting of scrap pieces more than 600 mm in dimension with more than 0.6 square meters total, shall be provided. Non-retained scraps shall be removed from site.

-- End of Section --

SECTION 09720

WALLCOVERINGS

PART 1 GENERAL

1.1 REFERENCES

The publications listed below form a part of this specification to the extent referenced. The publications are referred to in the text by basic designation only.

AMERICAN SOCIETY FOR TESTING AND MATERIALS (ASTM)

ASTM E 84	(1996a) Surface Burning Characteristics of Building Materials
ASTM F 793	(1993) Standard Classification of Wallcovering by Durability Characteristics

1.2 SUBMITTALS

Government approval is required for submittals with a "GA" designation; submittals having an "FIO" designation are for information only. The following shall be submitted in accordance with Section 01330 SUBMITTAL PROCEDURES:

SD-01 Data

Wallcovering and Accessories; FIO;AR.

Manufacturer's descriptive data, documentation stating physical characteristics, flame resistance, mildew and germicidal characteristics.

SD-06 Instructions

Installation; FIO;AR.

Preprinted installation instructions for wallcovering and accessories.

Maintenance; FIO;AR.

Preprinted cleaning and maintenance instructions for wallcovering and accessories.

SD-14 Samples

Wallcovering and Accessories; GA|ED.

Three samples of each indicated type, pattern, and color of wallcovering. Samples of wall covering shall be minimum 125 x 175 mm and of sufficient size to show pattern repeat.

1.3 DELIVERY AND STORAGE

Materials shall be delivered to the site in manufacturers original unopened

containers labeled with manufacturers name, pattern, texture, size and related information. Materials shall be stored in accordance with the manufacturer's instructions in a clean dry ventilated area with temperature maintained above 16 degrees C for two days prior to installation.

1.4 ENVIRONMENTAL REQUIREMENTS

Areas to receive wallcovering shall be maintained at a temperature above 16 degrees C for 7 days before, during, and 7 days after application.

1.5 EXTRA MATERIALS

Extra material from the same dye lot consisting of 0.5 m of full-width wallcovering for each 30 linear meters of wallcovering installed shall be provided for maintenance.

PART 2 PRODUCTS

2.1 WALLCOVERINGS

Wallcoverings shall be material designed specifically for the specified use. The wallcovering shall contain a non-mercury based mildewcide. The wallcovering shall be type made without the use of cadmium based stabilizers. Wallcovering shall have a Class A flame spread rating of 0-25 and smoke development rating of 0-50 when tested in accordance with ASTM E 84.

2.1.1 Vinyl Wallcovering Type II

Vinyl wallcovering shall be a vinyl coated woven or nonwoven fabric with germicidal additives and shall conform to ASTM F 793, Category V Type II, (0.445 to 0.815 kg) total weight per square meter and width of 1375 mm.

2.2 PRIMER AND ADHESIVE

Primer and adhesive shall be of a type recommended by the wallcovering manufacturer and shall contain a non-mercury based mildewcide. Adhesive shall be strippable type. Adhesive to install cap shall be of a type recommended by the manufacturer of the wainscot cap.

2.3 COLOR, TEXTURE, AND PATTERN

Color, texture, and pattern shall be in accordance with the COLOR SCHEDULE.

PART 3 EXECUTION

3.1 EXAMINATION

Contractor shall inspect all areas and conditions under which wallcoverings are to be installed. Contractor shall notify in writing of any conditions detrimental to the proper and timely completion of the installation. Work will proceed only when conditions have been corrected and accepted by the installer.

3.2 SURFACE PREPARATION

Wallcovering shall not be applied to surfaces that are rough, that contain stains that will bleed through the wallcovering, or that are otherwise unsuitable for proper installation. Cracks and holes shall be filled and

rough spots shall be sanded smooth. Surfaces to receive wallcovering shall be thoroughly dry. Plaster surfaces shall age at least 30 days prior to installation of vinyl wallcoverings. Interior surfaces of exterior masonry walls shall be sealed to prevent moisture penetration, then primed with a wallcovering primer in accordance with the manufacturer's instructions. Moisture content of plaster, concrete, and masonry shall be tested with an electric moisture meter and reading shall be not more than 5 percent. Masonry walls shall have flush joints. Concrete and masonry walls shall be coated with a thin coat of joint compound or cement plaster as a substrate preparation. To promote adequate adhesion of wall lining over masonry walls, the walls shall be primed as recommended by the wall lining manufacturer. Surface of walls shall be primed as required by manufacturer's instructions to permit ultimate removal of wallcovering from the wall surface. Primer shall be allowed to completely dry before adhesive application. Commencement of installation shall constitute acceptance of the substrate or surface, and responsibility for any unsatisfactory resulting finish as well as rectification thereof.

3.3 INSTALLATION

3.3.1 Wall Lining

Wall lining shall be installed over masonry walls that are to receive wallcovering. Lining shall be installed in accordance with the manufacturer's installation instructions. Lining shall be installed perpendicular to wallcovering to prevent overlapping of seams between lining and wallcovering.

3.3.2 Vinyl and Fabric Wallcovering

Wallcovering shall be installed in accordance with the manufacturer's installation instructions. Glue and adhesive spillage shall be immediately removed from wallcovering face and seams with a remover recommended by the manufacturer. After the installation is complete, the fabric wallcovering shall be vacuumed with a ceiling to floor motion.

3.4 CLEAN-UP

Upon completion of the work, wallcovering shall be left clean and free of dirt or soiling. Surplus materials, rubbish, and debris resulting from the wallcovering installation shall be removed and area shall be left clean.

-- End of Section --

SECTION 09900

PAINTING, GENERAL

PART 1 GENERAL

1.1 REFERENCES

The publications listed below form a part of this specification to the extent referenced. The publications are referred to in the text by basic designation only.

AMERICAN CONFERENCE OF GOVERNMENTAL INDUSTRIAL HYGIENISTS (ACGIH)

ACGIH-02	(1996) Threshold Limit Values for Chemical Substances and Physical Agents and Biological Exposure Indices

AMERICAN SOCIETY FOR TESTING AND MATERIALS (ASTM)

ASTM D 3273	(1994) Resistance to Growth of Mold on the Surface of Interior Coating in an Environmental Chamber
ASTM D 3274	(1995) Evaluating Degree of Surface Disfigurement of Paint Films by Microbial (Fungal or Algal) Growth or Soil and Dirt Accumulation
ASTM D 4214	(1989) Evaluating the Degree of Chalking of Exterior Paint Films
ASTM D 4258	(1988; R 1992) Surface Cleaning Concrete for Coating

COMMERCIAL ITEM DESCRIPTIONS (CID)

CID A-A-1500	(Rev A) Sealer, Surface (Latex Block Filler)
CID A-A-1632	(Basic) Varnish, Asphalt
CID A-A-1788	(Basic) Varnish, Oil: Interior
CID A-A-2246	(Rev A) Paint, Latex (Gloss, Interior)
CID A-A-2247	(Basic) Paint, Latex (Semigloss, Interior)
CID A-A-2248	(Basic) Paint, Latex, (Flat, Interior)
CID A-A-2339	(Basic) Stain (Wood, Solvent-Dye Type)
CID A-A-2542	(Basic) Sealer, Terrazzo and Concrete Floors, Waterbased
CID A-A-2834	(Rev A) Urethane, Waterborne (Low VOC, Clear)

CID A-A-2867	(Basic) Coating, Polyurethane, Single Component Moisture Cure, Alipathic
CID A-A-2962	(Basic) Enamel, Alkyd
CID A-A-2994	(Basic) Primer Coating, Interior, for Walls and Wood

FEDERAL SPECIFICATIONS (FS)

FS TT-E-2784	(Rev A) Enamel (Acrylic-Emulsion, Exterior Gloss and Semigloss) (Metric)

STEEL STRUCTURES PAINTING COUNCIL (SSPC)

SSPC Paint 5	(1995) Zinc Dust, Zinc Oxide and Phenolic Varnish Paint
SSPC Paint 20	(1991) Zinc-Rich Primers (Type I - Inorganic and Type II - Organic)
SSPC Paint 23	(1982) Latex Primer for Steel surfaces
SSPC Paint 25	(1991) Red Iron Oxide, Zinc Oxide, Raw Linseed Oil and Alkyd Primer (Without Lead and Chromate Pigments)
SSPC SP 1	(1982) Solvent Cleaning
SSPC SP 2	(1995) Hand Tool Cleaning
SSPC SP 3	(1995) Power Tool Cleaning
SSPC SP 7	(1994) Brush-Off Blast Cleaning

1.2 SUBMITTALS

Government approval is required for submittals with a "GA" designation; submittals having an "FIO" designation are for information only. The following shall be submitted in accordance with Section 01330 SUBMITTAL PROCEDURES:

SD-01 Data

Paint; FIO;AR.

The names, quantity represented, and intended use for the proprietary brands of materials proposed to be substituted for the specified materials when the required quantity of a particular batch is 200 L or less.

SD-06 Instructions

Mixing and Thinning; FIO;AR. Application; FIO;AR.

Manufacturer's current printed product description, material safety data sheets (MSDS) and technical data sheets for each coating system. Detailed mixing, thinning and application instructions, minimum and maximum application temperature, and curing and drying times between coats for

epoxy, moisture-curing polyurethane, and liquid glaze coatings. Detailed application instructions for textured coatings shall be provided.

SD-09 Reports

Paint; GA|AR.

A statement as to the quantity represented and the intended use, plus the following test report for batches in excess of 200 L:

a. A test report showing that the proposed batch to be used meets specified requirements:

b. A test report showing that a previous batch of the same formulation as the batch to be used met specified requirements, plus, on the proposed batch to be used, a report of test results for properties of weight per liter, viscosity, fineness of grind, drying time, color, and gloss.

SD-13 Certificates

Lead; FIO;AR. Mildewcide and Insecticide; FIO;AR. Volatile Organic Compound (VOC) Content; FIO;AR.

Certificate stating that paints for interior use contain no mercurial mildewcide or insecticide. Certificate stating that paints proposed for use contain not more than 0.06 percent lead by weight of the total nonvolatile. Certificate stating that paints proposed for use meet Federal VOC regulations and those of the of the local Air Pollution Control Districts having jurisdiction over the geographical area in which the project is located.

SD-14 Samples

Moisture-Curing Polyurethane; FIO;AR.

A complete moisture-curing polyurethane system applied to a panel of the same material as that on which the coating will be applied in the work and for each color specified. The sample panels will be used for quality control in applying the system.

Paint; GA|AR.

While the material is at the site or source of supply, and at a time agreeable to the Contractor and the Contracting Officer, a 1 liter sample of each color and batch, except for quantities of 200 liters or less, shall be taken by random selection from the sealed containers by the Contractor in the presence of a representative of the Contracting Officer. The contents of the containers to be sampled shall be thoroughly mixed to ensure that the sample is representative. Samples shall be identified by designated name, specification number, manufacturer name and address, batch number, project contract number, intended use, and quantity involved.

1.3 PACKAGING, LABELING, AND STORING

Paints shall be in sealed containers that legibly show the designated name, formula or specification number, batch number, color, quantity, date of manufacture, manufacturer's formulation number, manufacturer's directions including any warnings and special precautions, and name of manufacturer.

Pigmented paints shall be furnished in containers not larger than 20 liters. Paints and thinner shall be stored in accordance with the manufacturer's written directions and as a minimum stored off the ground, under cover, with sufficient ventilation to prevent the buildup of flammable vapors and at temperatures between 4 and 35 degrees C. Paints shall be stored on the project site or segregated at the source of supply sufficiently in advance of need to allow 30 days for testing.

1.4 APPROVAL OF MATERIALS

When samples are tested, approval of materials will be based on tests of the samples; otherwise, materials will be approved based on test reports furnished with them. If materials are approved based on test reports furnished, samples will be retained by the Government for testing should the materials appear defective during or after application. In addition to any other remedies under the contract the cost of retesting defective materials will be at the Contractor's expense.

1.5 ENVIRONMENTAL CONDITIONS

Unless otherwise recommended by the paint manufacturer, the ambient temperature shall be between 7 and 35 degrees C when applying coatings other than water-thinned, epoxy, and moisture-curing polyurethane coatings. Water-thinned coatings shall be applied only when ambient temperature is between 10 and 32 degrees C. Epoxy, and moisture-curing polyurethane coatings shall be applied only within the minimum and maximum temperatures recommended by the coating manufacturer. Moisture-curing polyurethane shall not be applied when the relative humidity is below 30 percent.

1.6 SAFETY AND HEALTH

Work shall comply with applicable Federal, State, and local laws and regulations, and with the ACCIDENT PREVENTION PLAN, including the Activity Hazard Analysis as specified in the CONTRACT CLAUSES. The Activity Hazard Analysis shall include analyses of the potential impact of painting operations on painting personnel and on others involved in and adjacent to the work zone.

1.6.1 Worker Exposures

Exposure of workers to hazardous chemical substances shall not exceed limits established by ACGIH-02, or as required by a more stringent applicable regulation.

1.6.2 Toxic Compounds

Unless approved by the Contracting Officer, toxic products shall not be used which have no inherent odor, irritant or other perceptible properties to identify their presence.

1.6.3 Training

Workers having access to an affected work area shall be informed of the contents of the applicable material data safety sheets (MDSS) and shall be informed of potential health and safety hazard and protective controls associated with materials used on the project. An affected work area is one which may receive mists and odors from the painting operations. Workers involved in preparation, painting and clean-up shall be trained in the safe handling and application, and the exposure limit, for each

material which the worker will use in the project. Personnel having a need to use respirators and masks shall be instructed in the use and maintenance of such equipment.

1.6.4 Coordination

Work shall be coordinated to minimize exposure of building occupants, other Contractor personnel, and visitors to mists and odors from preparation, painting and clean-up operations.

PART 2 PRODUCTS

2.1 PAINT

The term "paint" as used herein includes emulsions, enamels, paints, stains, varnishes, sealers, cement-emulsion filler, and other coatings, whether used as prime, intermediate, or finish coat. Paint shall conform to the requirements listed in the painting schedules at the end of this section, except when the required amount of a material of a particular batch is 200 liters or less, an approved first-line proprietary paint material with similar intended formulation, usage and color to that specified may be used. Additional requirements are as follows:

2.1.1 Colors and Tints

Colors shall be as selected from manufacturer's standard colors, as indicated. Manufacturer's standard color is for identification of color only. Tinting of epoxy and urethane paints shall be done by the manufacturer. Stains shall conform in shade to manufacturer's standard color. The color of the undercoats shall vary slightly from the color of the next coat.

2.1.2 Mildewcide and Insecticide

Paint specified for all coats applied to fabrics and vapor barrier jackets over insulation shall contain a mildewcide that will not adversely affect the color, texture, or durability of the coating. The mildewcide shall be incorporated into the paint by the manufacturer and shall attain a surface disfigurement rating of 8 or greater when tested in accordance with ASTM D 3273 and evaluated in accordance with ASTM D 3274. Mercurial mildewcide shall not be used in interior paint. Insecticides shall not be used in paint.

2.1.3 Lead

Paints containing lead in excess of 0.06 percent by weight of the total nonvolatile content (calculated as lead metal) shall not be used.

2.1.4 Chromium

Paints containing zinc chromate or strontium chromate pigments shall not be used.

2.1.5 Volatile Organic Compound (VOC) Content

Paints shall comply with applicable federal, state and local laws enacted to insure compliance with Federal Clean Air Standards and shall conform to the restrictions of the local air pollution control authority.

PART 3 EXECUTION

3.1 PROTECTION OF AREAS NOT TO BE PAINTED

Items not to be painted which are in contact with or adjacent to painted surfaces shall be removed or protected prior to surface preparation and painting operations. Items removed prior to painting shall be replaced when painting is completed. Following completion of painting, workmen skilled in the trades involved shall reinstall removed items. Surfaces contaminated by coating materials shall be restored to original condition.

3.2 SURFACE PREPARATION

Surfaces to be painted shall be clean and free of foreign matter before application of paint or surface treatments. Oil and grease shall be removed prior to mechanical cleaning. Cleaning shall be programmed so that dust and other contaminants will not fall on wet, newly painted surfaces. Exposed ferrous metals such as nail heads on or in contact with surfaces to be painted with water-thinned paints, shall be spot-primmed with a suitable corrosion-inhibitive primer capable of preventing flash rusting and compatible with the coating specified for the adjacent areas. Application of first coat of paint shall constitute acceptance of substrate or surface, and responsibility for any unsatisfactory resulting finish as well as rectification thereof.

3.2.1 Concrete, Stucco and Masonry Surfaces

Concrete, stucco and masonry surfaces shall be allowed to dry at least 30 days before painting, except concrete slab on grade which shall be allowed to cure 90 days before painting. Surfaces shall be cleaned in accordance with ASTM D 4258. Glaze, efflorescence, laitance, dirt, grease, oil, asphalt, surface deposits of free iron and other foreign matter shall be removed prior to painting. Surfaces to receive polyurethane or epoxy coatings shall be acid-etched or mechanically abraded as specified by the coating manufacturer, rinsed with water, allowed to dry, and treated with the manufacturer's recommended conditioner prior to application of the first coat.

3.2.2 Ferrous Surfaces

Ferrous surfaces including those that have been shop-coated, shall be solvent-cleaned or detergent-washed in accordance with SSPC SP 1. Surfaces that contain loose rust, loose mill scale, and other foreign substances shall be cleaned mechanically with hand tools according to SSPC SP 2, power tools according to SSPC SP 3 or by sandblasting according to SSPC SP 7. Shop-coated ferrous surfaces shall be protected from corrosion by treating and touching up corroded areas immediately upon detection.

3.2.3 Nonferrous Metallic Surfaces

Galvanized, aluminum and aluminum-alloy, lead, copper, and other nonferrous metal surfaces shall be solvent-cleaned or detergent-washed in accordance with SSPC SP 1.

3.2.4 Gypsum Board Surfaces

Gypsum board surfaces shall be dry and shall have all loose dirt and dust removed by brushing with a soft brush, rubbing with a cloth, or vacuum-cleaning prior to application of the first-coat material. A damp

cloth or sponge may be used if paint will be water-based.

3.2.5 Mastic-Type Surfaces

Mastic-type surfaces shall be prepared by removing foreign material.

3.2.6 Plaster Surfaces

Plaster shall age at least 30 days before painting. Plaster shall be clean and free from loose matter and shall have an instrument-measured moisture content not exceeding 8 percent.

3.2.7 Wood Surfaces

Wood surfaces shall be cleaned of foreign matter. Moisture content of the wood shall not exceed 12 percent as measured by a moisture meter, unless otherwise authorized. Wood surfaces adjacent to surfaces to receive water-thinned paints shall be primed and/or touched up before applying water-thinned paints. Small, dry seasoned knots shall be scraped, cleaned, and given a thin coat of commercial knot sealer, before application of the priming coat. Pitch on large, open, unseasoned knots and all other beads or streaks of pitch shall be scraped off, or, if it is still soft, removed with mineral spirits or turpentine, and the resinous area shall be thinly coated with knot sealer. Finishing nails shall be set, and all holes and surface imperfections shall be primed. After priming, holes and imperfections in finish surfaces shall be filled with putty or plastic wood filler, colored to match the finish coat if natural finish is required, allowed to dry, and sanded smooth. Putty or wood filler shall be compatible with subsequent coatings.

3.2.7.1 Interior Wood Stain

Interior wood surfaces to receive stain shall be sanded. Oak and other open-grain wood to receive stain shall be given a coat of wood filler not less than 8 hours before the application of stain; excess filler shall be removed and the surface sanded smooth.

3.2.8 Previously Painted Surfaces

Previously painted surfaces specified to be repainted or which are damaged during construction shall be thoroughly cleaned of all grease, dirt, dust or other foreign matter. Blistering, cracking, flaking and peeling or other deteriorated coatings shall be removed. Slick surfaces shall be roughened. Damaged areas such as, but not limited to, nail holes, cracks, chips, and spalls shall be repaired with suitable material to match adjacent undamaged areas. Edges of chipped paint shall be feather edged and sanded smooth. Rusty metal surfaces shall be cleaned as per SSPC requirements. Solvent, mechanical, or chemical cleaning methods shall be used to provide surfaces suitable for painting. Chalk shall be removed so that when tested in accordance with ASTM D 4214, the chalk resistance rating is no less than 8. New, proposed coatings shall be compatible with existing coatings. If existing surfaces are glossy, the gloss shall be reduced.

3.3 MIXING AND THINNING

When thinning is approved as necessary to suit surface, temperature, weather conditions, or application methods, paints may be thinned in accordance with the manufacturer's directions. When thinning is allowed,

paints shall be thinned immediately prior to application with not more than 0.125 L of suitable thinner per liter. The use of thinner shall not relieve the Contractor from obtaining complete hiding, full film thickness, or required gloss. Thinning shall not cause the paint to exceed limits on volatile organic compounds. Paints of different manufacturers shall not be mixed.

3.3.1 Cement-Emulsion Filler Coat

Cement and aggregate shall be dry-mixed so that uniform distribution and intermixing are obtained. Mixing liquid and one-half of the total amount of water shall be premixed and added gradually to the white portland cement and aggregate with constant stirring until a thick, smooth material is obtained. Emulsion paint shall then be added to the mixture and stirred until uniformity is obtained. The blend shall have a thick, creamy consistency. The remainder of the water shall be added if necessary to obtain a material with adequate application properties. Blending resin emulsion or emulsion paint with any other component shall be done with caution; too rapid an agitation will cause air entrapment and foaming.

3.3.2 Two-Component Systems

Two-component systems shall be mixed in accordance with manufacturer's instructions. Any thinning of the first coat to ensure proper penetration and sealing shall be as recommended by the manufacturer for each type of substrate.

3.4 APPLICATION

Painting practices shall comply with applicable federal, state and local laws enacted to insure compliance with Federal Clean Air Standards. Unless otherwise specified or recommended by the paint manufacturer, paint may be applied by brush, roller, or spray. At the time of application, paint shall show no signs of deterioration. Uniform suspension of pigments shall be maintained during application. Each coat of paint shall be applied so dry film shall be of uniform thickness and free from runs, drops, ridges, waves, pinholes or other voids, laps, brush marks, and variations in color, texture, and finish. Hiding shall be complete. Rollers for applying paints and enamels shall be of a type designed for the coating to be applied and the surface to be coated. Special attention shall be given to insure that all edges, corners, crevices, welds, and rivets receive a film thickness equal to that of adjacent painted surfaces. Paints, except water-thinned types, shall be applied only to surfaces that are completely free of moisture as determined by sight or touch.

3.4.1 Ventilation

Affected areas shall be ventilated during paint application so that workers exposure to chemical substances shall not exceed limits as established by ACGIH-02, or as required by a more stringent applicable regulation. Interior work zones having a volume of 280 cubic meters or less shall be ventilated at a minimum of 2 air exchanges per hour. Ventilation in larger work zones shall be maintained by means of mechanical exhaust. Solvent vapors shall be exhausted outdoors, away from air intakes and workers. Return air inlets in the work zone shall be temporarily sealed before start of work until the coatings have dried.

3.4.2 Respirators

Operators and personnel in the vicinity of operating paint sprayers shall wear respirators.

3.4.3 First Coat

The first coat on plaster, gypsum wallboard, and other surfaces shall include repeated touching up of suction spots or overall application of primer or sealer to produce uniform color and gloss. Excess sealer shall be wiped off after each application. The first coat on both faces of wood doors shall be applied at essentially the same time. Glazed doors and sashes shall be given the specified coating system within 3 weeks of the time they are glazed, but not before the glazing material has set; paint shall overlay glass about 1.78 mm all around. Each varnish coat shall be sanded lightly prior to application of subsequent coats.

3.4.4 Timing

Surfaces that have been cleaned, pretreated, and otherwise prepared for painting shall be given a coat of the specified first coat as soon as practical after such pretreatment has been completed, but prior to any deterioration of the prepared surface. Sufficient time shall elapse between successive coats to permit proper drying. This period shall be modified as necessary to suit weather conditions. Oil-based or oleoresinous solvent-type paints shall be considered dry for recoating when the paint feels firm, does not deform or feel sticky under moderate pressure of the thumb, and the application of another coat of paint does not cause the undercoat to lift or lose adhesion. Manufacturer's instructions for application, curing and drying time between coats of two-component systems shall be followed.

3.4.5 Stains

Stain shall be applied at the rate specified in the manufacturer's printed directions. Oil-type stain shall be applied by brushing with the grain for the full length of the board or course of siding.

3.4.6 Fillers

Concrete and masonry surface voids shall be filled; however, surface irregularities need not be completely filled. The dried filler shall be uniform and free of pinholes. Filler shall not be applied over caulking compound.

3.4.6.1 Cement-Emulsion Filler

Immediately before filler application, surfaces shall be dampened uniformly and thoroughly, with no free surface water visible, by several applications of potable water with a fog spray, allowing time between the sprayings for water to be absorbed. Cement-emulsion filler shall be scrubbed into the surface vigorously with a stiff-bristled brush having tampico or palmyra bristles not longer than 63 mm. At least 24 hours shall elapse before applying exterior emulsion paint over cement-emulsion filler. When the ambient temperature is over 29 degrees C, cement-emulsion filler surfaces shall be dampened lightly with a fog spray of potable water immediately prior to application of the subsequent paint coat.

3.4.6.2 Latex Filler

Latex filler, CID A-A-1500, shall be applied according to the

manufacturer's instructions. Surface voids shall be filled and excess filler shall be removed from the surface with a rubber squeegee. The filler shall be allowed to dry the length of time specified by the manufacturer prior to applying successive coats of paint.

3.4.7 Ferrous-Metal Primer

Primer for ferrous-metal shall be applied to ferrous surfaces to receive paint other than asphalt varnish prior to deterioration of the prepared surface. The semitransparent film applied to some pipes and tubing at the mill is not to be considered a shop coat, but shall be overcoated with the specified ferrous-metal primer prior to application of finish coats.

3.5 PIPE COLOR CODE MARKING

Pipes in exposed areas and in accessible pipe spaces shall be provided with color band and titles adjacent to all valves, except those provided at plumbing fixtures, at not more than 12 meter spacing on straight pipe runs, adjacent to change in direction, and on both sides where pipes pass through walls or floors. Color code marking shall be of the color listed in TABLE I and the size listed in TABLE II. The arrows shall be installed adjacent to each band to indicate the direction of flow in the pipe. The legends shall be printed in upper-case black letters as listed in TABLE I. Letter sizes shall be as listed in TABLE II. Marking shall be painted or applied using colored, pressure-sensitive adhesive markers of standard manufacture. Paint shall be as specified for insulated and uninsulated piping.

TABLE I. COLOR CODES FOR MARKING PIPE

Material	Band	Letters and Arrow*	Legend
Cold water (potable)	Green	White	POTABLE WATER
Fire protection water	Red	White	FIRE PR. WATER
Hot water (domestic)	Green	White	H.W.
Hot water recirculating (domestic)	Green	White	H.W.R.
High temp. water supply	Yellow	Black	H.T.W.S.
High temp. water return	Yellow	Black	H.T.W.R.
Boiler feed water	Yellow	Black	B.F.
Low temp. water supply (heating)	Yellow	Black	L.T.W.S.
Low temp. water return (heating)	Yellow	Black	L.T.W.R.
Condenser water supply	Green	White	COND. W.S.
Condenser water return	Green	White	COND. W.R.
Chilled water supply	Green	White	C.H.W.S.
Chilled water return	Green	White	C.H.W.R.
Treated water	Yellow	Black	TR. WATER
Chemical feed	Yellow	Black	CH. FEED
Compressed air	Yellow	Black	COMP. AIR
Natural gas	Blue	White	NAT. GAS
Freon	Blue	White	FREON
Fuel oil	Yellow	Black	FUEL OIL
Steam	Yellow	Black	STM.
Condensate	Yellow	Black	COND.

TABLE II. COLOR CODE MARKING SIZES

Outside Diameter of Pipe Covering (mm)	Width of Color Band (mm)	Arrow Length x Width (mm)	Size of Legend Letters and Numerals (mm)
Less than 38	200	200 x 57	13
38 to 60	200	200 x 57	19
60 to 150	300	200 x 57	31
200 to 225	600	300 x 110	63
Over 250	800	300 x 115	88

3.6 MISCELLANEOUS PAINTING

3.6.1 Lettering

Lettering shall be provided as scheduled on the drawings, shall be block type, and shall be black enamel. Samples shall be approved before application.

3.7 SURFACES TO BE PAINTED

Surfaces listed in the painting schedules at the end of this section, other than those listed in paragraph SURFACES NOT TO BE PAINTED, shall be painted as scheduled.

3.8 SURFACES NOT TO BE PAINTED

Surfaces not to be painted: Chase space, surfaces of glass, signs, fire-rating labels, hardware, fittings, and other factory finished items and plates attached thereto shall not be painted.

3.9 CLEANING

Cloths, cotton waste and other debris that might constitute a fire hazard shall be placed in closed metal containers and removed at the end of each day. Upon completion of the work, staging, scaffolding, and containers shall be removed from the site or destroyed in an approved manner. Paint and other deposits on adjacent surfaces shall be removed and the entire job left clean and acceptable. Place waste paint and solvents in designated containers and dispose of in an approved manner. When paint recycling is available, collect all waste paint by type and provide for delivery to recycling or collection facility.

3.10 PAINTING SCHEDULES

The following painting schedules identify the surfaces to be painted and prescribe the paint to be used and the number of coats of paint to be applied. Contractor options are indicated by ------or------ between optional systems or coats.

EXTERIOR PAINTING SCHEDULE

Surface	First Coat	Second Coat	Third Coat
Concrete, unless	FS TT-E-2784	FS TT-E-2784	None

EXTERIOR PAINTING SCHEDULE

Surface	First Coat	Second Coat	Third Coat
otherwise specified.	Type III	Type III	
Ferrous metal unless otherwise specified	SSPC Paint 5	CID A-A-2962 Type I Grade C	CID A-A-2962 Type 1 Grade C
Galvanized metal.	FS TT-E-2784 Type III	FS TT-E-2784	FS TT-E-2784
Aluminum aluminum-alloy, and other non-ferrous metal (non-galvanized)	CID A-A-2867	CID A-A-2867	None
	FS TT-E-2784 Type III	FS TT-E-2784	FS TT-E-2784

INTERIOR PAINTING SCHEDULE

Surface	First Coat	Second Coat	Third Coat
Plaster, gypsum board, concrete, and concrete masonry units not requiring a smooth finish, unless otherwise specified.	CID A-A-2994 Type II	CID A-A-2246	None
		----------or----------	
		CID A-A-2247	None
		----------or----------	
		CID A-A-2248	None
Concrete masonry units requiring a smooth finish	CID A-A-1500	CID A-A-2994 Type II	CID A-A-2246
			-----or-----
			CID A-A-2247
			-----or-----
			CID A-A-2248
Concrete: floors requiring dust reduction in following areas: ADP 108.	CID A-A-2542 Type I	None	None
Plaster and gypsum board: in restrooms , unless otherwise specified.	CID A-A-2994 Type II	FS TT-E-2784	None
Ferrous Metal unless otherwise specified	SSPC Paint 25	CID A-A-2962 Type I Grade C	CID A-A-2962 Type I Grade C
	SSPC Paint 23	FS TT-E-2784	FS TT-E-2784
	CID A-A-2867	CID A-A-2867	None

Aluminum and aluminum alloy unless otherwise specified.	CID A-A-2867	CID A-A-2867	None
	FS TT-E-2784 Type III	FS TT-E-2784 Type [I] [II]	FS TT-E-2784 Type [I][II]
Ferrous metal in concealed damp spaces or in exposed areas having unpainted adjacent surfaces.	CID A-A-1632	None	None
Ferrous metal factory-primed mechanical and electrical equipment.	Two coats of paint as recommended by the equipment manufacturer		None
Galvanized metal:	FS TT-E-2784 Type III	FS TT-E-2784	None
	SSPC Paint 5	CID A-A-2962 Type I Grade C	CID A-A-2962 Type I Grade C
	SSPC Paint 25	CID A-A-2962 Type I Grade C	CID A-A-2962 Type I Grade C
	SSPC Paint 23	FS TT-E-2784	FS TT-E-2784
Wood: unless otherwise specified.	CID A-A-2994 Type I	CID A-A-2246 ----------or---------- CID A-A-2247 ----------or---------- CID A-A-2248	None None None
Wood: stain and varnish finishes as indicated:	Commercially available stain	CID A-A-1788 Class I In addition a fourth coat of CID A-A-1788 Class I	CID A-A-1788 Class I

	CID A-A-2339	CID A-A-2834 Type I In addition a fourth coat of CID A-A-2834 Type I	CID A-A-2834 Type I
Ferrous Metal: Convector enclosures, electrical conduit runs: metallic tubing uninsulated ducts and pipes, pipe hangers, louvers, grilles, and air outlets, in areas having painted adjacent surfaces.	SSPC Paint 23	None	None
Aluminum and Galvanized Surface Metal: Convector enclosures, electrical conduit runs metallic tubing uninsulated ducts and pipes, pipe hangers, louvers, grilles, and air outlets, in areas having painted adjacent surfaces.	FS TT-E-2784	CID A-A-2246 ----------or---------- CID A-A-2247 ----------or---------- CID A-A-2248	CID A-A-2246 ---------- CID A-A-2247 ---------- CID A-A-2248
Metal: surfaces subject to high temperature, up to 232 degrees C	SSPC Paint 20 Type I	None	None
Facing of vapor barrier jackets of presized or adhesive finished cloth cover insulation on pipes, ducts, and equipment.	Two coats of paint to match adjacent areas		None

-- End of Section --

SECTION 10160

TOILET PARTITIONS

PART 1 GENERAL

1.1 REFERENCES

The publications listed below form a part of this specification to the extent referenced. The publications are referred to in the text by basic designation only.

FEDERAL SPECIFICATIONS (FS)

FS RR-P-1352 (Rev C) Partitions, Toilet, Complete

1.2 SYSTEM DESCRIPTION

Toilet partition system, including toilet enclosures, room entrance screens, and urinal screens, shall be a complete and usable system of panels, hardware, and support components. The partition system shall be provided by a single manufacturer and shall be a standard product as shown in the most recent catalog data. The partition system shall be as shown.

1.3 SUBMITTALS

Government approval is required for submittals with a "GA" designation; submittals having an "FIO" designation are for information only. The following shall be submitted in accordance with Section 01330 SUBMITTAL PROCEDURES:

SD-01 Data

Toilet Partition System; FIO;AR.

Manufacturer's technical data and catalog cuts including installation and cleaning instructions.

SD-04 Drawings

Toilet Partition System; FIO;AR.

Drawings showing plans, elevations, details of construction, hardware, reinforcing, fittings, mountings, and anchorings.

SD-14 Samples

Toilet Partition System; GA|ED.

Manufacturer's standard color charts and color samples.

1.4 DELIVERY, STORAGE, AND HANDLING

Components shall be delivered to the jobsite in the manufacturer's original packaging with the brand, item identification, and project reference clearly marked. Components shall be stored in a dry location that is

adequately ventilated and free from dust, water, or other contaminants and shall have easy access for inspection and handling.

1.5 WARRANTY

Manufacturer's standard performance guarantees or warranties that extend beyond a 1 year period shall be provided.

PART 2 PRODUCTS

2.1 TOILET ENCLOSURES

Toilet enclosures shall conform to FS RR-P-1352, Type I, Style A. Width, length and height of toilet enclosures shall be as shown. Finish surface of panels shall be solid phenolic core finish 5, with decorative plastic laminate on both sides . Panels indicated to receive toilet paper holders or grab bars as specified in Section 10800 TOILET ACCESSORIES shall be reinforced for the reception of the items required. Grab bars shall withstand a bending stress, shear stress, shear force, and a tensile force induced by 1112 N . Grab bars shall not rotate within their fittings.

2.2 URINAL SCREENS

Urinal screens shall conform to FS RR-P-1352, Type III, Style D. Finish surface of screens shall be solid phenolic core finish 5. Width and height of urinal screens shall be as shown.

2.3 HARDWARE

Hardware for the toilet partition system shall conform to FS RR-P-1352for the specified type and style of partitions. Hardware finish shall be highly resistant to alkalies, urine, and other common toilet room acids.

2.4 COLORS

Color of finishes for toilet partition system components shall be as indicated on the drawings.

PART 3 EXECUTION

3.1 INSTALLATION

Toilet partitions shall be installed straight and plumb in accordance with approved manufacturer's instructions with horizontal lines level and rigidly anchored to the supporting construction. Where indicated, anchorage to walls shall be by through-bolting. Drilling and cutting for installation of anchors shall be at locations that will be concealed in the finished work.

3.2 ADJUSTING AND CLEANING

Doors shall have a uniform vertical edge clearance of approximately 5 mm and shall rest open at approximately 30 degrees when unlatched. Baked enamel finish shall be touched up with the same color of paint that was used for the finish. Toilet partitions shall be cleaned in accordance with approved manufacturer's instructions and shall be protected from damage until accepted.

-- End of Section --

SECTION 10201

METAL WALL LOUVERS

PART 1 GENERAL

1.1 REFERENCES

The publications listed below form a part of this specification to the extent referenced. The publications are referred to in the text by the basic designation only.

AMERICAN ARCHITECTURAL MANUFACTURERS ASSOCIATION (AAMA)

AAMA 603.8	(1992; Addendum 1993) Pigmented Organic Coatings on Extruded Aluminum

AIR MOVEMENT AND CONTROL ASSOCIATION, INC. (AMCA)

AMCA 500	(1991) Louvers, Dampers and Shutters
AMCA 511	(1986) Certified Ratings Program for Air Control Devices

AMERICAN SOCIETY FOR TESTING AND MATERIALS (ASTM)

ASTM A 653/A 653M	(1995) Steel Sheet, Zinc-Coated (Galvanized) or Zinc-Iron Alloy-Coated (Galvannealed) by the Hot-Dip Process
ASTM B 209M	(1995) Aluminum and Aluminum-Alloy Sheet and Plate (Metric)
ASTM B 221M	(1995; Rev. A) Aluminum and Aluminum-Alloy Extruded Bars, Rods, Wire, Shapes, and Tubes (Metric)

1.2 SUBMITTALS

Government approval is required for submittals with a "GA" designation; submittals having an "FIO" designation are for information only. The following shall be submitted in accordance with Section 01330 SUBMITTAL PROCEDURES:

SD-04 Drawings

Wall Louvers; GA|ED.

Show all information necessary for fabrication and installation of louvers including plans, sections, elevations and details to indicate materials, sizes, thicknesses, fastenings, and profiles of frames at jambs, heads and sills.

SD-14 Samples

Louvers; GA|ED

Submit sets of samples for each finish and color required. Sample finishes shall be on the specified alloy temper, and thickness of metal required for the work; on 150 mm lengths of extrusion or150 mm squares of sheet or plate sets; and shall show the maxmum range or variation in color and shade. Colors of finishes shall match colors indicated in the COLOR SCHEDULE.

1.3 DELIVERY, STORAGE, AND PROTECTION

Deliver materials to the site in an undamaged condition. Carefully store materials off the ground to provide proper ventilation, drainage, and protection against dampness. Louvers shall be free from nicks, scratches, and blemishes. Replace defective or damaged materials with new.

PART 2 PRODUCTS

2.1 MATERIALS

2.1.1 Galvanized Steel Sheet

ASTM A 653/A 653M, coating designation Z275.

2.1.2 Aluminum Sheet

ASTM B 209M, alloy 3003 or 5005 with temper as required for forming.

2.1.3 Extruded Aluminum

ASTM B 221M, alloy 6063-T5 or -T52.

2.2 METAL WALL LOUVERS

Weather resistant type, with bird screens and made to withstand a wind load of not less than1.44 kilopascals. Wall louvers shall bear the AMCA certified ratings program seal for air performance and water penetration in accordance with AMCA 500 and AMCA 511. The rating shall show a water penetration of 0.06 kilograms or less per square meter of free area at a free velocity of 244 meters per minute.

2.2.1 Extruded Aluminum Louvers

Fabricated of extruded 6063-T5 or -T52 aluminum with a wall thickness of not less than 2 mm.

2.2.2 Formed Metal Louvers

Formed of zinc-coated steel sheet not thinner than 16 U.S. gage, or aluminum sheet not less than 2 mm thick.

2.2.3 Mullions and Mullion Covers

Same material and finish as louvers. Provide mullions where indicated. Provide mullions covers on both faces of joints between louvers.

2.2.4 Screens and Frames

For aluminum louvers, provide 12.5 mm square mesh, 1.8 or 1.5 mm aluminum or

6 mm square mesh, 1.5 mm aluminum bird screening. For steel louvers, provide 12.5 mm square mesh, 2.5 or 1.5 mm zinc-coated steel; 12.5 mm square mesh, 1.5 mm copper; or 6 mm square mesh, 1.5 mm thick zinc-coated steel or copper bird screening. Mount screens in removable, rewirable frames of same material and finish as the louvers.

2.3 FASTENERS AND ACCESSORIES

Provide stainless steel screws and fasteners for aluminum louvers and zinc-coated or stainless steel screws and fasteners for steel louvers. Provide other accessories as required for complete and proper installation.

2.4 FINISHES

2.4.1 Aluminum

Provide factory-applied anodic coating.

2.4.1.1 Organic Coating

Clean and prime exposed aluminum surfaces and apply a baked enamel finish conforming to AAMA 603.8, 0.02 mm minimum dry film thickness, color as indicated on the drawings.

2.4.2 Steel

Provide factory-applied coating. Clean and phosphate treat exposed surfaces and apply rust-inhibitive primer and baked enamel finish coat, 0.025 mm minimum total dry film thickness, color as indicated on the drawings.

PART 3 EXECUTION

3.1 INSTALLATION

3.1.1 Wall Louvers

Install using stops or moldings, flanges, strap anchors, or jamb fasteners as appropriate for the wall construction and in accordance with manufacturer's recommendations.

3.1.2 Screens and Frames

Attach frames to louvers with screws or bolts.

3.2 PROTECTION FROM CONTACT OF DISSIMILAR MATERIALS

3.2.1 Copper or Copper-Bearing Alloys

Paint copper or copper-bearing alloys in contact with dissimilar metal with heavy-bodied bituminous paint or separate with inert membrane.

3.2.2 Aluminum

Where aluminum contacts metal other than zinc, paint the dissimilar metal with a primer and two coats of aluminum paint.

3.2.3 Metal

Paint metal in contact with mortar, concrete, or other masonry materials with alkali-resistant coatings such as heavy-bodied bituminous paint.

3.2.4 Wood

Paint wood or other absorptive materials that may become repeatedly wet and in contact with metal with two coats of aluminum paint or a coat of heavy-bodied bituminous paint.

-- End of Section --

SECTION 10260

WALL AND CORNER PROTECTION

PART 1 GENERAL

1.1 REFERENCES

The publications listed below form a part of this specification to the extent referenced. The publications are referred to in the text by basic designation only.

AMERICAN SOCIETY FOR TESTING AND MATERIALS (ASTM)

ASTM B 221	(1996) Aluminum and Aluminum-Alloy Extruded Bars, Rods, Wire, Profiles, and Tubes
ASTM D 256	(1993a) Determining the Pendulum Impact Resistance of Notched Specimens of Plastics
ASTM D 635	(1996) Rate of Burning and/or Extent and Time of Burning of Self-Supporting Plastics in a Horizontal Position
ASTM E 84	(1996a) Surface Burning Characteristics of Building Materials

SOCIETY OF AMERICAN AUTOMOTIVE ENGINEERS (SAE)

SAE J1545	(1986) Instrumental Color Difference Measurement for Exterior Finishes, Textiles and Color Trim

1.2 SUBMITTALS

Government approval is required for submittals with a "GA" designation; submittals having an "FIO" designation are for information only. The following shall be submitted in accordance with Section 01330 SUBMITTAL PROCEDURES:

SD-01 Data

Corner Guards; GA|ED. Wall Guards (Bumper Guards); GA|ED.

Manufacturer's descriptive data, catalog cuts, installation instructions, and recommended cleaning instructions.

SD-04 Drawings

Corner Guards; GA|ED. Wall Guards (Bumper Guards); GA|ED.

Drawings indicating locations and typical elevations of each type of item. Drawings shall show vertical and horizontal dimensions, full size sections,

thickness of materials, and fastening details.

SD-14 Samples

Finish; GA|ED.

Manufacturer's standard samples indicating color and texture of materials requiring color and finish selection.

1.3 DELIVERY AND STORAGE

Materials shall be delivered to the project site in manufacturer's original unopened containers with seals unbroken and labels and trademarks intact. Materials shall be kept dry, protected from weather and damage, and stored under cover. Materials shall be stored at approximately 21 degrees C for at least 48 hours prior to installation.

PART 2 PRODUCTS

2.1 GENERAL

To the maximum extent possible, corner guards, door and door frame protectors, wall guards (bumper guards), wall panels and wall covering shall be the standard products of a single manufacturer and shall be furnished as detailed. Drawings show general configuration of products required, and items differing in minor details from those shown will be acceptable.

2.1.1 Resilient Material

Resilient material shall consist of high impact resistant extruded acrylic vinyl, polyvinyl chloride, or injection molded thermal plastic and shall conform to the following:

2.1.1.1 Minimum Impact Resistance

Minimum impact resistance shall be 960.8 N.m/m (18 ft. lb/sq. inch) when tested in accordance with ASTM D 256, (Izod impact, ft. lbs per sq inch notched).

2.1.1.2 Fire Rating

Fire rating shall be Class 1 when tested in accordance with ASTM E 84, having a maximum flame spread of 25 and a smoke developed rating of 450 or less. Material shall be rated self extinguishing when tested in accordance with ASTM D 635. Material shall be labeled and tested by an approved nationally known testing laboratory. Resilient material used for protection on fire rated doors and frames shall be listed by the testing laboratory performing the tests. Resilient material installed on fire rated wood/steel door and frame assemblies shall have been tested on similar type assemblies. Test results of material tested on any other combination of door/frame assembly will not be acceptable.

2.1.1.3 Integral Color

Colored components shall have integral color and shall be matched in accordance with SAE J1545 to within plus or minus 1.0 on the CIE-LCH scales.

2.2 CORNER GUARDS

2.2.1 Resilient Corner Guards

Corner guard units shall be surface mounted type, radius formed to profile shown. Corner guards shall be 2800 mm high. Mounting hardware, cushions, and base plates shall be furnished. Assembly shall consist of a snap-on corner guard formed from high impact resistant resilient material, minimum 1.98 mm thick, mounted on a continuous aluminum retainer. Extruded aluminum retainer shall conform to ASTM B 221, alloy 6063, temper T5 or T6. Flush mounted type guards shall act as a stop for adjacent wall finish material. Factory fabricated end closure caps shall be furnished for top and bottom of surface mounted corner guards. Flush mounted corner guards installed in fire rated wall shall maintain the rating of the wall. Insulating materials that are an integral part of the corner guard system shall be provided by the manufacturer of the corner guard system. Exposed metal portions of fire rated assemblies shall have a paintable surface.

2.3 WALL GUARDS (BUMPER GUARDS)

2.3.1 Wall Guards, Combination Handrail/Wall Guards and Handrails

Wall guards, combination handrail/wall guards, and handrails shall be provided with prefabricated end closure caps, inside and outside corners, concealed splices, cushions, mounting hardware and other accessories standard with the manufacturer. Extruded aluminum retainers shall conform to ASTM B 221, alloy 6063, temper T5 or T6. End caps and corners shall be field adjustable to assure close alignment with handrails and wall guards. Wall guards shall be profile as shown with vinyl.

2.3.1.1 Wall Guards/Bed Locators

Wall guards shall consist of snap-on covers of high impact resistant resilient material, minimum 1.98 mm thick, mounted over 230 mm wide aluminum, minimum 1.57 mm thick retainer, anchored to wall at maximum 600 mm on center.

2.4 TRIM, FASTENERS AND ANCHORS

Vinyl trim, fasteners and anchors shall be provided for each specific installation as shown.

2.5 FINISH

2.5.1 Resilient Material Finish

Finish for resilient material shall be embossed texture with colors in accordance with SAE J1545.

2.6 COLOR

Color shall be as indicated on the drawings.

PART 3 EXECUTION

3.1 INSTALLATION

3.1.1 Corner Guards and Wall Guards (Bumper Guards)

Material shall be mounted at location indicated in accordance with

manufacturer's recommendations.

-- End of Section --

SECTION 10270

RAISED FLOOR SYSTEM

PART 1 GENERAL

1.1 REFERENCES

The publications listed below form a part of this specification to the extent referenced. The publications are referred to in the text by basic designation only.

CEILINGS AND INTERIOR SYSTEMS CONTRACTORS ASSOCIATION (CISCA)

CISCA-01	(1987) Recommended Test Procedures for Access Floors

INTERNATIONAL CONFERENCE OF BUILDING OFFICIALS (ICBO)

ICBO-01	(1994) Uniform Building Code (3 Vol.)

NATIONAL ELECTRICAL MANUFACTURERS ASSOCIATION (NEMA)

NEMA LD 3	(1995) High-Pressure Decorative Laminates

NATIONAL FIRE PROTECTION ASSOCIATION (NFPA)

NFPA 75	(1995) Protection of Electronic Computer/Data Processing Equipment

1.2 SYSTEM DESCRIPTION

Raised flooring shall be installed at the location and elevation and in the arrangement shown on the drawings. The floor system shall be of the stringer type, complete with all supplemental items, and shall be the standard product of a manufacturer specializing in the manufacture of raised floor systems. Provide for self-alignment of floor panels, adjustable pedestals and readily removable floor panels covered as indicated. Finished assembly shall be rigid and free of vibration, noise, and rocking panels.

1.2.1 Floor Panels

Floor panel testing shall be conducted in accordance with CISCA-01. When tested as specified, all deflection and deformation measurements shall be made at the point of load application on the top surface of the panel. Floor panels shall be capable of supporting 6675 N concentrated load without deflecting more than 2.03 mm and without permanent deformation in excess of 0.25 mm in any of the specified tests. Floor panels shall be capable of supporting 11.97 KPa per square meter uniform live load without deflection more than 1.02 mm. Floor panels shall be capable of supporting 4450 N rolling load without deflecting more than 1.02 mm and without permanent deformation in excess of 0.51 mm. In accordance with CISCA-01, the permanent deformation limit under rolling load shall be satisfied in all of the specified tests. In the specified tests, the permanent deformation shall be measured after 10 passes with Wheel 1 and after 10,000

passes with Wheel 2.

1.2.2 Stringers

Stringers shall be capable of supporting a 1110 N concentrated load at midspan without permanent deformation in excess of 0.25 mm.

1.2.3 Pedestals

Pedestals shall be capable of supporting a 22.24 kN axial load without permanent deformation.

1.2.4 Pedestal Adhesive

Adhesive shall be capable of securing a pedestal in place with sufficient bonding strength to resist an overturning force of 113 Nm.

1.2.5 Bond Strength of Factory Installed Floor Covering

Bond strength of floor covering shall be sufficient to permit handling of the panels by use of the panel lifting device, and to withstand moving caster loads up to 4.45 kN, without separation of the covering from the panel.

1.2.6 Leakage

When the space below the finished floor is to be an air plenum, air leakage through the joints between panels and around the perimeter of the floor system shall not exceed 0.15 L/s of air per linear meter of joint subjected to 2.5 mm, water gauge, positive pressure in the plenum.

1.2.7 Grounding

The raised floor system shall be grounded for safety hazard and static suppression.

1.3 SUBMITTALS

Government approval is required for submittals with a "GA" designation; submittals having an "FIO" designation are for information only. The following shall be submitted in accordance with Section 01330 SUBMITTAL PROCEDURES:

SD-01 Data

Raised Floor System; GA|ED.

Manufacturer's descriptive data, catalog cuts, and installation instructions. The data shall include information about any design and production techniques, procedures and policies used to conserve energy, reduce material, improve waste management or incorporate green building/recycled products into the manufacturer of their components or products.. Include air transfer capacity of grilles, registers and panels.. Cleaning and maintenance instructions shall be included. Design calculations which demonstrate that the proposed floor system meets requirements for seismic loading, prepared in accordance with ICBO-01, sealed by a professional engineer. Certified copies of test reports may be submitted in lieu of calculations

SD-04 Drawings

Raised Floor System; GA|ED.

Drawings showing layout of the work, sizes and details of components, details at floor perimeter, bracing to resist seismic or other lateral loads, typical cutout details including size and shape limitation, method and location of grounding, description of shop coating, floor finishes, installation height above structural floor, location of panels and cutouts.

SD-09 Reports

Tests; GA|AR. Testing of Electrical Resistance; GA|AR.

Certified copies of test reports from an approved testing laboratory, attesting that the proposed floor system components meet the performance requirements specified.

Use of Recycled/Recovered Materials; FIO;AR

Certified use of recycled material, indicating percentage of recycled content and costs of the product.

SD-13 Certificates

Raised Floor System; GA|AR.

Certificate of compliance attesting that the raised floor system meets specification requirements.

SD-14 Samples

Floor Finish Color and Pattern; GA|ED

Three samples of each indicated floor finish color and pattern. Sample size shal be minimum 150 x 150 mm.

Panel Type and Suspension System; GA|AR.

One sample of each panel type and suspension system proposed for use.

1.4 DELIVERY, STORAGE, AND HANDLING

Materials shall be stored in original protective packaging in a safe, dry, and clean location and shall be handled in a manner to prevent damage. Panels shall be stored at temperatures between 4 and 32 degrees C, and between 20 percent and 70 percent humidity.

1.5 EXTRA MATERIALS

Spare floor panels, spare complete pedestal assemblies, and spare stringers shall be furnished at the rate of one space for each 100 or fraction thereof required. Furnish three linear meters of cut-out trim. Store extra materials in same manner and location as project materials.

1.6 OPERATION AND MAINTENANCE MANUALS

Provide maintenance instructions for proper care of the floor panel surface. When conductive flooring is specified, require submittal of

maintenance instructions to identify special cleaning and maintenance requirements to maintain "conductivity" properties of the panel finish.

1.7 RESOURCE CONSERVATION RECOVERY ACT

In compliance with the Resource Conservation Recovery Act, the Contractor shall be responsible for using recycled and/or recovered materials to the maximum extent possible. Recycled materials used shall be reported to the Contracting Officer. The report shall certify use of the recycled material and indicate the percentage of recycled content and the costs of the product.

PART 2 PRODUCTS

2.1 FLOOR PANELS

2.1.1 Panel Construction

Except for edge panels, panel size shall be 600 by 600 mm. Finished panels shall be within a 0.25 mm tolerance of the nominal size, and shall be square within a tolerance of 0.38 mm measured corner-to-corner. The top surface of panels shall be flat within a 0.51 mm tolerance measured corner-to-corner. Panels shall be permanently marked to indicate load rating and model number.

2.1.1.1 Metal-Clad Cementitious Fill Panel (Composite Panels)

Composite panels shall be of die-formed steel construction totally enclosing the panel, including the top surface. The void spaces between the top sheet and the formed steel bottom sheet shall be completely filled with an incombustible cementitious or concrete material.

2.1.2 Floor Covering

Floor panels shall be surfaced with materials firmly bonded in place with waterproof adhesive. The electrical resistance shall remain stable over the life expectancy of the floor covering. Any antistatic agent used in the manufacturing process shall be an integral part of the material, and shall not be surface applied. Bolt heads or similar attachments shall not rise above the traffic surface.

2.1.2.1 High Pressure Laminate

High pressure laminate surfacing shall conform to NEMA LD 3, Grade HW 62. Total system electrical resistivity from the wearing surface of the floor to the ground connection shall be between 150,000 ohms and 20,000,000,000 ohms. Color and pattern shall be as shown in the COLOR SCHEDULE.

2.1.3 Edge Strip

Panels shall be edged with extruded vinyl edge strips secured in place with mechanical interlock or adhesive bond, or shall be of a replaceable type. Top of strip shall be approximately 3 mm wide, and shall be flush with the floor surfacing.

2.1.4 Accessories

Registers, grilles, perforated panels, and plenum dividers shall be provided where indicated, and shall be the manufacturer's standard type.

Registers, grilles, and perforated panels shall be designed to support the same static loads as floor panels without structural failure, and shall be capable of delivering the air volumes indicated. Registers and perforated panels shall be 25 percent open area and shall be equipped with adjustable dampers.

2.1.5 Resilient Base

Base shall be rubber or vinyl coved style as indicated in the FINISH SCHEDULE. Base shall be 100 mm high and a minimum 3 mm thick. Performed outside corners shall be furnished.

2.1.6 Lifting Device

Each individual room shall be provided with one floor panel lifting device standard with the floor manufacturer. A minimum of two devices shall be furnished.

2.1.7 Cut-Outs

Provide 20 field cut-outs 100 mm x 150 mm sealed in accordance with manufacturer's recommendations to prevent abrasion of cables and entrance of dust and debris. Coordinate the location of cut-outs with the Contracting Officer Representative.

2.1.8 Touch-Up

Touch-up paint on painted metal members.

2.2 PANEL SUPPORT SYSTEM

2.2.1 Pedestals

Pedestals shall be of steel or aluminum or a combination thereof. Ferrous materials shall have a factory-applied corrosion-resistant finish. Pedestal base plates shall provide a minimum of 10,300 square millimeter of bearing surface and shall be a minimum of 3 mm thick. Pedestal shafts shall be threaded to permit height adjustment within a range of approximately 50 mm, to permit overall floor adjustment within plus or minus 2.5 mm of the required elevation, and to permit leveling of the finished floor surface within 1.56 mm in 3000 mm in all directions. Locking devices shall be provided to positively lock the final pedestal vertical adjustments in place. Pedestal caps shall interlock with panels to preclude tilting or rocking of the panels.

2.2.2 Stringers

Stringers shall be of rolled steel or extruded aluminum, and shall interlock with the pedestal heads to prevent lateral movement.

2.2.3 Underfloor Bracing

Special bracing to resist the effects of seismic or other forces shall be as shown on the approved detail drawings.

2.3 FASCIA

Aluminum or steel fascia plates shall be provided at open ends of floor, at sides of ramps and steps, and elsewhere as required to enclose the free

area under the raised floor. Steel plates shall have a factory applied baked enamel finish. Finish on aluminum plates shall be as standard with the floor system manufacturer. Fascia plates shall be reinforced on the back, and shall be supported using the manufacturer's standard lateral bracing at maximum 1200 mm on center. Trim, angles, and fasteners shall be provided as required.

2.4 TESTS

Raised flooring shall be factory tested by an independent laboratory at the same position and maximum design elevation and in the same arrangement as shown on the drawings for installation so as to duplicate service conditions as much as possible.

2.4.1 Load Tests

Floor panel, stringer, and pedestal testing shall be conducted in accordance with CISCA-01.

2.5 Test for Bond Strength of Factory Installed Floor Covering

The test panel shall be supported on pedestals and stringers as specified for the installed floor. The supports shall be braced as necessary to prevent sideways movement during the test. A test load of 4.45 kN shall be imposed on the test assembly through a hard plastic caster 75 mm in diameter and 25 mm wide. The caster shall be rolled completely across the center of the panel. The panel shall withstand 20 passes of the caster with no delamination or separation of the covering.

2.6 COLOR OF FLOOR FINISH

Color shall be in accordance with the COLOR SCHEDULE.

PART 3 EXECUTION

3.1 INSTALLATION

The floor system shall be installed in accordance with the manufacturer's instructions and with the approved detail drawings. Open ends of the floor, where the floor system does not abut wall or other construction, shall have positive anchorage and rigid support. Areas to receive raised flooring shall be maintained between 16 and 32 degrees C, and between 20 percent and 70 percent humidity for 24 hours prior to and during installation.

3.1.1 Preparation for Installation

The area in which the floor system is to be installed shall be cleared of all debris. Structural floor surfaces shall be thoroughly cleaned and all dust shall be removed. Seal all concrete surfaces below finished floor as specified in Section 09900 PAINTING, GENERAL. Floor coatings required for dust or vapor control shall be installed prior to installation of pedestals only if the pedestal adhesive will not damage the coating. If the coating and adhesive are not compatible, the coating shall be applied after the pedestals have been installed and the adhesive has cured. Commencement of installation shall constitute acceptance of substrates.

3.1.1.1 Sequencing and Scheduling

Mark pedestal locations on concrete subfloor so that mechanical and electrical work can take place without interfering with installation of pedestals. Do not proceed with installation of raised flooring until after substantial completion of other performable work within affected spaces.

3.1.2 Pedestals

Pedestals shall be accurately spaced, and shall be set plumb and in true alignment. Base plates shall be in full and firm contact with the structural floor, and shall be secured to the structural floor with adhesive.

3.1.3 Stringers

Stringers shall be interlocked with the pedestal caps to preclude lateral movement, and shall be spaced uniformly in parallel lines at the indicated elevation.

3.1.4 Auxiliary Framing

Auxiliary framing or pedestals shall be provided around columns and other permanent construction, at sides of ramps, at open ends of the floor, and beneath panels that are substantially cut to accommodate utility systems. Special framing for additional lateral support shall be as shown on the approved detail drawings.

3.1.5 Panels

The panels shall be interlocked with supports in a manner that will preclude lateral movement. Perimeter panels, cutout panels, and panels adjoining columns, stairs, and ramps must be fastened to the supporting components to form a rigid boundary for the interior panels. Floors shall be level within 2 mm measured with a 250 mm straightedge in all directions. Cut edges of composite panels shall be coated with a silicone rubber sealant or with an adhesive recommended by the panel manufacturer. Extruded vinyl edging shall be secured in place at all cut edges of all panel cut-outs to prevent abrasion of cables. Where the space below the floor is a plenum, cutouts for conduit and similar penetrations shall be closed using self-extinguishing sponge rubber.

3.1.6 Resilient Base

Base shall be provided at vertical wall intersections. Cracks and voids in walls and other vertical surfaces to receive base shall be filled with an approved filler. The base shall be applied after the floor system has been completely installed. Base shall be applied with adhesive in accordance with the manufacturer's recommendations.

3.1.7 Fascia Plates and Plenum Dividers

Exposed floor ends and exposed openings of ramps and stairs shall be covered with aluminum or steel closures. Install by scribing to subfloor and attaching to floor and flooring system with aluminum angles. Adhere to subfloor and access floor system with sealant to provide air tight seal.

3.1.8 Repair of Zinc Coating

Zinc coating that has been damaged, and cut edges of zinc-coated components and accessories, shall be repaired by the application of a galvanizing

repair paint. Areas to be repaired shall be thoroughly cleaned prior to application of the paint.

3.2 CLEANING AND PROTECTION

3.2.1 Cleaning

The space below the completed floor shall be free of all debris. Before any traffic or other work on the completed raised floor is started, the completed floor shall be cleaned in accordance with the floor covering manufacturer's instructions.

3.2.2 Protection

Traffic areas of raised floor systems shall be protected with a covering of building paper, fiberboard, or other suitable material to prevent damage to the surface. Cutouts shall be covered with material of sufficient strength to support the loads to be encountered. Plywood or similar material shall be placed on the floor to serve as runways for installation of heavy equipment. Protection shall be maintained until the raised floor system is accepted.

3.3 FIRE SAFETY

An automatic detection system shall be installed below the raised floor meeting the requirements of NFPA 75 paragraph 5-2.1 and shall sound an audible and visual alarm. Air space below the raised floor shall be subdivided into areas not exceeding 929 squared meters by tight, noncombustible bulkheads. All penetrations for piping and cables shall be sealed to maintain bulkhead properties.

-- End of Section --

SECTION 10400

BUILDING SPECIALTIES

PART 1 GENERAL

Materials indicated shall be provided as shown and installed in areas shown on drawings. Materials shall be installed complete with all necessary brackets, fittings and hardware. Equipment shall be mounted as indicated. Contractor shall be responsible for proper fitting and hanging of all equipment.

1.1 REFERENCES

The publications listed below form a part of this specification to the extent referenced. The publications are referred to in the text by basic designation only and represent the latest edition in force when this contract is awarded.

NATIONAL FIRE PROTECTION (NFPA)

NFPA 701	(1989) Methods of Fire Test for Flame-Resistant Textiles and Films

1.2 SUBMITTALS

Government approval is required for submittals with a "GA" designation; submittals having an "FIO" designation are for information only. The following shall be submitted in accordance with Section 01330: SUBMITTAL PROCEDURES:

SD-01 Data

Projection Screens and Hardware; FIO;AR. Ceiling Recessed Projector Mounts ; FIO;AR. Ceiling Mounted Monitor Brackets; FIO;AR

Manufacturer's data composed of catalog cuts, brochures, and product information shall be submitted for the items listed above.

SD-04 Drawings

Projection Screens and Hardware; FIO;AR. Ceiling Recessed Projector Mounts ; FIO;AR. Ceiling Mounted Monitor Brackets; FIO;AR.

Drawings showing fabrication and installation details. The manufacturer's descriptive data will be acceptable, provided this literature accurately shows items proposed to be furnished and the method of installation.

SD-19 Operations and Maintenance Manuals:

Projection Screens; FIO;AR

For each product manufacturer's instructions for care and maintenance of equipment.

1.3 DELIVERY AND STORAGE

The Contractor shall be responsible for the receipt, storage, and handling of materials and supplies necessary to provide complete installation. Materials shall be delivered to the project site in the manufactures original unopened containers.

PART 2 PRODUCTS

2.1 PROJECTION SCREENS and HARDWARE

Projection screens shall be provided where indicated on reflected ceiling plans. Each screen shall provide a viewing area 2.1 m high by 2.7 m wide. Projection screen shall be electrically operated having three button control switch (up, down and stop) with momentary contact. Control switch to be positioned along the same wall as projector screen as directed by the Contracting Officer. Screen shall conform to the requirements of NFPA 701.

2.1.1 Mounted Motor Inside Screen

Motor to be mounted inside screen roller and be instantly reversible, lifetime lubricated, with internal thermal overload protection and electric break. Motor to be mounted with sound absorbing fixtures with factory set limit switches.

2.1.2 Projection Screen Roller

Projection screen roller to be 76.2 mm diameter steel tube mounted with sound absorbing features. Viewing surface to be 100% vinyl, matt white finish providing clarity and uniform brightness through a broad viewing angle. Screen to be flame and mildew resistant, with black borders. Each side edge of viewing surface equipped with tab-guide cable system to maintain even lateral tension and hold surface flat. Bottom edge supported and masked with black extruded aluminum dowel weighted to apply proper vertical tension.

2.1.3 Projection Screen Case

Projection screen case to be constructed of aluminum plate. Bottom of case to be fully enclosed by removable aluminum closure panels and concealed by acoustical ceiling tile. Bottom closure panel to be attached to screen case with screws and be removable to allow access to roller and drive assembly. An independently motorized trap door attached with completely concealed hinges. Trap door supported along both front and back edges for entire length (with no opening between trap and case). Trap shall automatically open into the case when screen is operated in the down position, and shall remain open until the screen is completely recoiled onto the roller. Exposed surfaces and trap door shall be finished in flat black.

2.1.4 Ceiling Recessed Projector Mounts

Ceiling recessed video projector mounts shall be provided where indicated on reflected ceiling plans. Projector mounts shall be capable of supporting up to 300 pounds of equipment. Projector mounts shall be electrically operated having three button control switch (up, down and stop) with momentary contact. Control switch to be positioned adjacent to the projector screen controls as directed by the Contracting Officer.

Ceiling recessed projector system shall be fully recessed, with fixed

mounted frame of 25.4 mm by 50.8 mm by 16 gage tubular steel frame fully enclosed with 20 gage steel panels and be suitable for use in return air plenums. Operable mounting frame shall be 25.4 mm by 50.8 mm by 16 gage tubular steel grid frame suspended from fixed frame at each corner to assure level even positioning. In the closed position, exposed surfaces shall match the acoustical ceiling system and be flush with the ceiling grid. As per manufacturer's recommendations, projectors shall be centered on the projection screens. Projector sizes and locations shown on the drawings are approximated. Contractor shall coordinate projector and projection screen locations with the diffuser and lighting fixture locations.

2.1.4.1 Motor Mounted to Fixed Frame

Motor to be mounted to the fixed frame and be instantly reversible, lifetime lubricated, with internal thermal overload protection and electric break. Motor to be mounted with sound absorbing fixtures with factory set limit switches. One duplex power outlet for the projector equipment shall be provided within each unit.

2.1.5 Ceiling Mounted Monitor Brackets

2.1.5.1 Bracket Units

Bracket units shall provide a minimum of seven foot clearance from the finished floor to the underside of the bracket.

2.1.5.2 Color

Monitor brackets shall be finished with baked enamel white in color.

2.2 ELECTRICAL WORK

Electrical projection screen motors and recessed projector system motors shall be 120 volt, 60 hertz, 1 phase alternating current, neutral grounded service. Electrical work shall conform to the requirements of Section 16415, ELECTRICAL WORK, INTERIOR.

PART 3 EXECUTION

3.1 INSTALLATION

Installation shall be in accordance with the approved detail drawings and manufactures installation instructions. Units shall be level, plumb, secure, and at proper height and location. The Contractor shall furnish and install supplementary or miscellaneous items in total, including clips, brackets, or anchorages incidental to, or necessary for a sound, secure and complete installation. Damaged units shall be repaired or replaced by the Contractor as directed by the Contracting Officer.

-- End of Section --

SECTION 10440

INTERIOR SIGNAGE

PART 1 GENERAL

1.1 REFERENCES

The publications listed below form a part of this specification to the extent referenced. The publications are referred to in the text by basic designation only.

ALUMINUM ASSOCIATION (AA)

AA DAF-45	(1980) Designation System for Aluminum Finishes
AA PK-1	(1989) Registration Record of Aluminum Association Alloy Designations and Chemical Composition Limits for Aluminum Alloys in the Form of Castings and Ingot
AA SAA-46	(1978) Standards for Anodized Architectural Aluminum

AMERICAN ARCHITECTURAL MANUFACTURERS ASSOCIATION (AAMA)

AAMA 605.2	(1992; Addenda Jan 1995) Voluntary Specification for High Performance Organic Coatings on Architectural Extrusions and Panels

AMERICAN NATIONAL STANDARDS INSTITUTE (ANSI)

ANSI Z97.1	(1984; Rev 1994) Safety Performance Specifications and Methods of Test for Safety Glazing Materials Used in Buildings

AMERICAN SOCIETY FOR TESTING AND MATERIALS (ASTM)

ASTM B 209	(1996) Aluminum and Aluminum-Alloy Sheet and Plate
ASTM B 221	(1996) Aluminum and Aluminum-Alloy Extruded Bars, Rods, Wire, Shapes, and Tubes

1.2 GENERAL

Interior signage shall be of the sizes and types shown on the drawings, shall conform to the requirements specified herein, and shall be provided at the locations indicated. Signs shall be complete with lettering, framing as detailed, and related components for a complete installation. Signs shall be the standard product of a manufacturer regularly engaged in the manufacture of such products and shall essentially duplicate signs that have been in satisfactory use at least 2 years prior to bid opening.

1.3 SUBMITTALS

Government approval is required for submittals with a "GA" designation; submittals having an "FIO" designation are for information only. The following shall be submitted in accordance with Section 01330 SUBMITTAL PROCEDURES:

SD-01 Data

Interior Signage; GA|ED.

Manufacturer's descriptive data, catalogs cuts, installation and cleaning instructions.

SD-04 Drawings

Interior Signage; GA|ED.

Drawings showing elevations of each type of sign, dimensions, details and methods of mounting or anchoring, shape and thickness of materials, and details of construction. A schedule showing the location of each sign type shall be included.

SD-14 Samples

Interior Signage; GA|ED.

One sample of each of the following sign types showing typical quality and workmanship. The samples may be installed in the work, provided each sample is identified and location recorded.

a. Direction sign.

b. Door sign.

c. Building directory.

Two samples of manufacturer's standard color chips for each material requiring color selection.

1.4 DELIVERY AND STORAGE

Materials shall be delivered to the jobsite in manufacturer's original packaging and stored in a clean, dry area.

PART 2 PRODUCTS

2.1 COLOR, FINISH, AND CONTRAST

Color shall be in accordance with the COLOR SCHEDULE. In buildings required to be handicapped-accessible, the characters and background of signs shall be eggshell, matte, or other non-glare finish. Characters and symbols shall contrast with their background - either light characters on a dark background or dark characters on a light background.

2.2 CHARACTER PROPORTIONS AND HEIGHTS

Letters and numbers on signs in handicapped-accessible buildings, which do

not designate permanent rooms or spaces, shall have a width-to-height ratio between 3:5 and 1:1 and a stroke-width-to-height ratio between 1:5 and 1:10. Characters and numbers on signs shall be sized according to the viewing distance from which they are to be read. The minimum height is measured using an upper case letter X. Lower case characters are permitted. Suspended or projected overhead signs shall have a minimum character height of 75 mm .

2.3 ALUMINUM ALLOY PRODUCTS

Aluminum extrusions shall be at least 3 mm thick, and aluminum plate or sheet shall be at least 1.3 mm thick. Extrusions shall conform to ASTM B 221; plate and sheet shall conform to ASTM B 209. Where anodic coatings are specified, alloy shall conform to AA PK-1 alloy designation 514.0. Exposed anodized aluminum finishes shall be as shown and shall conform to AA SAA-46.

2.3.1 Anodic Coating

Anodized finish shall conform to AA DAF-45 as follows:

a. Integral color anodized designation AA-M10-C22-A32, Architectural Class 0.010 to 0.018 mm .

2.3.2 Organic Coating

Organic coating shall conform to AAMA 605.2, with total dry film thickness not less than 0.030 mm.

2.4 VINYL SHEETING FOR GRAPHICS

Vinyl sheeting for graphics shall be a minimum 0.08 mm film thickness. Film shall include a precoated pressure sensitive adhesive backing.

2.5 ACRYLIC SHEET

Acrylic sheet for panels and components shall conform to ANSI Z97.1.

2.6 PLAQUE SIGNS

Plaque signs shall be a modular type signage system. Signs shall be fabricated of Type ES laminated thermosetting plastic suitable for engraving or acrylic plastic conforming to ANSI Z97.1.

2.6.1 Standard Modular Plaque Signs

Plaque signs shall consist of matte finish acrylic plastic, thickness and size as shown. Frames shall be molded acrylic. Corners of signs shall be 10 mm radius.

2.6.2 Modular Changeable Message Strip Plaque Signs

Changeable message strip plaque signs shall consist of [polycarbonate] [cast acrylic] back laminated to matte finish laminated thermosetting Type ES plastic face with message slots, as detailed, for insertion of changeable message strips. Thickness and size of signs shall be as shown on the drawings. Individual 1.6 mm thick message strips to permit removal, change, and reinsertion shall be provided as detailed.

2.6.3 Type of Mounting For Plaque Signs

Extruded aluminum brackets, in finish as shown, shall be furnished for hanging, projecting, and double-sided signs. Mounting for framed, hanging, and projecting signs shall be by holes and screws. Surface mounted signs shall be provided with countersunk mounting holes in plaques and mounting screws. Sign inserts shall be provided with 1.6 mm thick foam tape.

2.7 GRAPHICS

2.7.1 Raised and Brailled Characters and Pictorial Symbols

Letters and numbers on signs which designate permanent rooms and spaces in handicapped-accessible buildings shall be raised 0.8 mm upper case, sans serif or simple serif type and shall be accompanied with Grade 2 Braille. Raised characters shall be at least 16 mm height, but no higher than 50 mm. Pictograms shall be accompanied by the equivalent verbal description placed directly below the pictogram. The border dimension of the pictogram shall be 152 mm minimum in height. Accessible facilities shall use the international

2.7.2 Graphics Application

Signage graphics shall conform to the following:

a. Pressure sensitive precision cut vinyl letters shall be provided. Edges and corners of finished letter forms and graphics shall be true and clean.

2.7.3 Messages

See drawings and schedule for message content. Typeface: Helvetica Medium.

2.8 FABRICATION AND MANUFACTURE

2.8.1 Workmanship

Holes for bolts and screws shall be drilled or punched. Drilling and punching shall produce clean, true lines and surfaces. Exposed surfaces of work shall have a smooth finish and exposed riveting shall be flush. Fastenings shall be concealed where practicable.

2.8.2 Dissimilar Materials

Where dissimilar metals are in contact, the surfaces will be protected to prevent galvanic or corrosive action.

PART 3 EXECUTION

3.1 INSTALLATION

Signs shall be installed in accordance with approved manufacturer's instructions at locations shown on the drawings. Signs shall be installed plumb and true at mounting heights indicated, and by method shown or specified. Signs which designate permanent rooms and spaces in handicapped-accessible buildings shall be installed on the wall adjacent to the latch side of the door. Where there is no wall space to the latch side of the door, including at double leaf doors, signs shall be placed on the nearest adjacent wall. Mounting height shall be 1525 mm above the finish

floor to the centerline of the sign. Mounting location for such signage shall be so that a person may approach within 75 mm of signage without encountering protruding objects or standing within the swing of a door. Signs on doors or other surfaces shall not be installed until finishes on such surfaces have been installed.

3.1.1 Anchorage

Anchorage shall be in accordance with approved manufacturer's instructions. Anchorage not otherwise specified or indicated shall include slotted inserts, expansion shields, and power-driven fasteners when approved for concrete; toggle bolts and through bolts for masonry; machine carriage bolts for steel; lag bolts and screws for wood.

3.1.2 Protection and Cleaning

The work shall be protected against damage during construction. Hardware and electrical equipment shall be adjusted for proper operation. Glass, frames, and other sign surfaces shall be cleaned in accordance with the manufacturer's approved instructions.

-- End of Section --

SECTION 10523

FIRE EXTINGUISHERS, CABINETS AND ACCESSORIES

PART 1 GENERAL

1.1 SUBMITTALS

Government approval is required for submittals with a "GA" designation; submittals having an "FIO" designation are for information only. The following shall be submitted in accordance with Section 01330 SUBMITTAL PROCEDURES:

SD-01 Data

Fire Extinguishers; GA|AR. Extinguisher Cabinet; GA|ED. Wall Brackets; GA|AR. Replacement Parts; FIO;AR.

Manufacturer's Catalog Data shall be submitted for the items listed above.

SD-04 Drawings

Fire Extinguisher Cabinets; GA|ED

Drawings consisting of fabrication and assembly details to be performed in the factory, rough-in dimensions, details showing mounting methods, materials and cabinet type, relationship of box and trim to adjacent construction, panel style, trim style and door hardware.

SD-13 Certificates

Certificate of Compliance; FIO;AR.

Certification that fire extinguishers comply with OSHA, local codes, regulations and the requirements of the Ft. Meade Fire Department.

SD-14 Samples

Color and Finish; GA|EDFIO.

Three actual samples of manufacturer's standard factory-applied finish on metal to be used for the products, as indicated in the COLOR SCHEDULE.

1.2 DELIVERY, HANDLING, AND STORAGE

Materials shall be protected from weather, soil, and damage during delivery, storage, and construction.

Materials shall be delivered in their original packages, containers, or bundles bearing the brand name and the name of the material.

1.3 WARRANTY

Manufacturer's standard performance guarantees or warrantees that extend beyond a one-year period shall be provided.

PART 2 PRODUCTS

2.1 FIRE EXTINGUISHERS

Fire extinguishers shall be provided for each extinguisher cabinet and other locations indicated, in colors and finishes selected and approved by the Contracting Officer from manufacturer's standard which comply with the requirements of NFPA-10 and the Ft. Meade Fire Department.

2.1.1 Fire Extinguisher Type

Fire extinguisher type shall be Tri-Class Dry Chemical Type, UL-rated 4-A: 60B: C, 10 lb., normal capacity, in enameled steel container, for Class A, Class B, and Class C fires to comply with requirements and approval of the Contracting Officer and the Ft. Meade Fire Department.

2.2 FIRE EXTINGUISHER CABINETS

Fire extinguisher cabinets shall be provided where indicated, of suitable size for housing fire extinguishers of types and capacities indicated, and to fit wall condition indicated. Cabinets provided shall not be lockable or require glass to be broken to access the fire extinguisher.

2.2.1 Construction

Construction shall consist of manufacturer's standard steel box, with trim, frame, door and hardware to suit cabinet type, trim style, and door style indicated. Weld all joints and grind smooth. Miter and weld perimeter door frames.

2.2.2 Cabinet Type

Cabinet types shall be fully recessed in gypsumboard walls and surface mounted on masonry walls.

2.2.3 Trim Style

Fabricate trim with brass or bronze finish in one piece with corners mitered, welded and ground smooth with exposed trim consisting of one-piece combination trim and perimeter door frame overlapping surrounding wall surface with exposed trim face.

2.2.4 Door Material and Construction

Manufacturer's standard door construction of brass or bronze finish flush door construction, coordinated with cabinet types and trim styles selected.

2.2.5 Door Glazing

Door glazing shall be clear tempered float glass complying with ASTM C 1048 Grade B, Style 1, Type 1, Quality q3, Class I (Transparent); 6.35 mm.

2.2.6 Door Style

Manufacturer's standard flush door with vision panel.

2.2.7 Door Hardware

Manufacturer's standard door operating hardware of proper type for cabinet type, trim style, and door material and style indicated. Provide either

level handle with cam action latch, or door pull, concealed and friction latch. Provide concealed or continuous type hinge permitting door to open 180 degrees. Hardware to match door and trim finish.

2.2.8 Identification

Identify existence of fire extinguishers in cabinet with lettering spelling "FIRE EXTINGUISHER" applied to door using die cut letters. Provide lettering to comply with requirements for letter style, color, size, spacing and location as selected by the Project Designer from manufacturer's standard options.

2.2.9 Bracket-Mounted Extinguishers

Identify bracket-mounted extinguishers with panel signs spelling 'FIRE EXTINGUISHER" applied to wall surface. Letter size, style and location as selected by the Contracting Officer.

2.3 WALL BRACKETS

Fire extinguishers to be located where cabinets are not indicated shall have wall brackets and accessories as required by code and as approved by the Fort Meade Fire Department. Manufacturer's standard brackets designed to prevent accidental dislodgment of extinguisher, of sizes required for type and capacity of extinguisher indicated, in manufacturer's standard plated finish.

PART 3 EXECUTION

3.1 INSTALLATION

Install fire extinguishers, fire extinguisher cabinets and accessories as indicated on drawings. Verify exact locations prior to installation. Cabinets shall be mounted to comply with requirements of ADA handicapped accessibility guidelines. Fire extinguishers shall be inspected in accordance with NFPA-10 when placed into service. A tag or label shall be securely attached to the extinguisher indicating the month and year of the inspection and shall not be placed on the front of the fire extinguisher.

3.2 ACCEPTANCE PROVISIONS

3.2.1 Repairing

Damaged and unacceptable portions of completed work shall be removed and replaced with new work at no additional cost to the Government.

3.2.2 Cleaning

Surfaces of the work, and adjacent surfaces soiled as a result of the work, shall be cleaned in an approved manner. Equipment, surplus materials, and rubbish from the work shall be removed from the site and disposed of in an approved manner.

-- End of Section --

SECTION 10800

TOILET ACCESSORIES

PART 1 GENERAL

1.1 REFERENCES

The publications listed below form a part of this specification to the extent referenced. The publications are referred to in the text by basic designation only.

AMERICAN SOCIETY FOR TESTING AND MATERIALS (ASTM)

ASTM C 1036 (1991) Flat Glass

1.2 SUBMITTALS

Government approval is required for submittals with a "GA" designation, submittals having an "FIO" designation are for information only. The following shall be submitted in accordance with Section 01330 SUBMITTAL PROCEDURES:

SD-01 Data

Finishes; FIO;AR. Accessory Items; FIO;AR.

Manufacturer's descriptive data and catalog cuts indicating materials of construction, fasteners proposed for use for each type of wall construction, mounting instructions, and operation instructions.

SD-14 Samples

Finishes; GA|AR. Accessory Items; GA|AR.

One sample of each accessory proposed for use. Approved samples may be incorporated into the finished work, provided they are identified and their locations noted.

1.3 DELIVERY, STORAGE, AND HANDLING

Toilet accessories shall be wrapped for shipment and storage, delivered to the jobsite in manufacturer's original packaging and stored in a clean, dry area protected from construction damage and vandalism.

PART 2 PRODUCTS

2.1 MANUFACTURED UNITS

Toilet accessories shall be provided where indicated in accordance with paragraph SCHEDULE. Each accessory item shall be complete with the necessary mounting plates, shall be of sturdy construction with corrosion resistant surface.

2.1.1 Anchors and Fasteners

Anchors and fasteners shall be capable of developing a restraining force

commensurate with the strength of the accessory to be mounted and shall be suited for use with the supporting construction. Exposed fasteners shall have oval heads and shall be finished to match the accessory.

2.1.2 Finishes

Except where noted otherwise, finishes on metal shall be provided as follows:

Metal	Finish
Stainless steel	No. 4 satin finish
Carbon steel, copper alloy, and brass	Chromium plated, bright

2.2 ACCESSORY ITEMS

Accessory items shall conform to the requirements specified below.

2.2.1 Grab Bar (GB)

Grab bar shall be 1.3 mm (18 gauge) , 32 mm OD Type 304 stainless steel. Grab bar shall be form and length as indicated. Exposed mounting flange shall have set screw mounting holes concealed on the lip of the flange. Grab bar shall have satin finish . Installed bars shall be capable of withstanding a 2.225 kN vertical load without coming loose from the fastenings and without obvious permanent deformation. Space between wall and grab bar shall be 38 mm.

2.2.2 Glass Mirrors

Glass for mirrors shall be Type I transparent flat type, Class 1-clear. Glazing Quality q1 6 mm (1/4 inch) thick conforming to ASTM C 1036. Glass color shall be clear. Glass shall be coated on one surface with silver coating, copper protective coating, and mirror backing paint. Silver coating shall be highly adhesive pure silver coating of a thickness which shall provide reflectivity of 83 percent or more of incident light when viewed through 6 mm (1/4 inch) thick glass, and shall be free of pinholes or other defects. Copper protective coating shall be pure bright reflective copper, homogeneous without sludge, pinholes or other defects, and shall be of proper thickness to prevent "adhesion pull" by mirror backing paint. Mirror backing paint shall consist of two coats of special scratch and abrasion-resistant paint and shall be baked in uniform thickness to provide a protection for silver and copper coatings which will permit normal cutting and edge fabrication.

2.2.3 Combination Paper Towel Dispenser/Waste Receptacle Units (PTDWRHC)

Dispenser/receptacle shall be semi-recessed and shall have a capacity of 600 sheets of C-fold, single-fold, or 800 sheets of multi-fold towel. Waste receptacle shall be designed to be locked in unit and removable for service. Locking mechanism shall be tumbler key lock. Waste receptacle shall have a capacity of 68 L. Unit shall be fabricated of not less than 0.8 mm stainless steel welded construction with all exposed surfaces having a satin finish. Waste receptacle that accepts reusable liner standard for unit manufacturer shall be provided.

2.2.4 Sanitary Napkin Disposer (SND)

Sanitary napkin disposal shall be constructed of Type 304 stainless steel with removable leak-proof receptacle for disposable liners. Fifty disposable liners of the type standard with the manufacturer shall be provided. Receptacle shall be retained in cabinet by tumbler lock. Disposer shall be provided with a door for inserting disposed napkins, and shall be partition mounted, single or double access as indidcated.

2.2.5 Sanitary Napkin and Tampon Dispenser (SNTD)

Sanitary napkin and tampon dispenser shall be surface mounted. Dispenser, including door shall be Type 304 stainless steel and shall dispense both napkins and tampons with a minimum capacity of 20 each. Dispensing mechanism shall be for coin operation. Coin mechanisms shall be field changeable by adjusting pins for new coin designation. Coin mechanisms shall have minimum denominations of 10 cents, 25 cents. Doors shall be hung with a full-length corrosion-resistant steel piano hinge and secured with a tumbler lock. Keys for coin box shall be different from the door keys.

2.2.6 Soap Dispenser (SD)

Soap dispenser shall be lavatory mounted, liquid type consisting of a polyethylene tank with a minimum 0.94 L holding capacity and a 150 mm spout length.

2.2.7 Shelf, Metal, Heavy Duty (SMHD)

Heavy duty metal shelf shall be minimum of 1.3 mm (18 gauge) stainless steel with hemmed edges. Shelves over 750 mm shall be provided with intermediate supports. Supports shall be minimum of 1.6 mm (16 gauge), shall be welded to the shelf, and shall be spaced no more than 750 mm apart.

2.2.8 Mop Rack (MR)

Mop racks shall be stainless steel Type 304 satin finish, with 5 heavy-duty utility holders and include all rust prohibitive mounting.

2.2.9 Toilet Tissue Dispenser (TTD)

Toilet tissue holder shall be Type II - surface mounted with two rolls of tissue [mounted horizontally] [stacked vertically]. Cabinet shall be [carbon steel, bright chromium plated finish] [stainless steel, satin finish].

2.2.10 Toilet Seat Cover Dispenser (TSCD)

Toilet seat cover dispensers shall be stainless steel and be surface mounted. Dispenser shall have a minimum capacity of 500 seat covers.

PART 3 EXECUTION

3.1 INSTALLATION

Toilet accessories shall be securely fastened to the supporting construction in accordance with the manufacturer's approved instructions. Accessories shall be protected from damage from the time of installation

until acceptance.

3.1.1 Adjusting and Cleaning

a. Adjusting: Adjust toilet accessories for proper operation and verify that mechanisms function smoothly. Replace damaged or defective items.

b. Cleaning: Clean and polish all exposed surfaces strictly according to manufacturer's recommendations after removing temporary labels and protective coatings.

3.2 SCHEDULE

Accessories Required

First Floor	Women's Toilet	Men's toilet	Janitor
GB	2	2	--
PDTWR	2	2	--
SND	3 (Double Sided)	--	--
SNTD	1	--	--
SD	3	3	--
MR	--	--	1
TTD	6	4	--
TSCD	1	1	--

Second Floor	Women's Toilet	Men's toilet	Janitor
GB	2	2	--
PDTWR	2	2	--
SND	3 (Double Sided)	--	--
SNTD	1	--	--
SD	3	3	--
MR	--	--	1
TTD	6	4	--
TSCD	1	1	--

-- End of Section --

SECTION 12320

CABINETS AND COUNTERTOPS

PART 1 GENERAL

1.1 REFERENCES

The publications listed below form a part of this specification to the extent referenced. The publications are referred to in the text by basic designation only.

BUILDERS HARDWARE MANUFACTURERS ASSOCIATION (BHMA)

BHMA ANSI/BHMA A156.9	(1994) Cabinet Hardware

KITCHEN CABINET MANUFACTURERS ASSOCIATION (KCMA)

KCMA ANSI/KCMA A161.1	(1995) Recommended Performance & Construction Standards for Kitchen and Vanity Cabinets

NATIONAL ELECTRICAL MANUFACTURERS ASSOCIATION (NEMA)

NEMA LD 3	(1995) High-Pressure Decorative Laminates

1.2 DESIGN

Cabinets shall be wood, factory-fabricated and finished in the manufacturer's standard sizes and finishes of the type, design, and configuration indicated. Cabinets shall be constructed as specified and shall meet the requirements of KCMA ANSI/KCMA A161.1. Wall and base cabinet assemblies shall consist of individual units joined into continuous sections. Fastenings shall be accomplished to permit removal and replacement of individual units without affecting the remainder of the installation. Counters shall be provided with watertight sink rim when indicated. Drawers shall be removable and shall be equipped with position stops to avoid accidental complete withdrawals. Shelves shall be fixed or adjustable as indicated.

1.3 SUBMITTALS

Government approval is required for submittals with a "GA" designation; submittals having an "FIO" designation are for information only. The following shall be submitted in accordance with Section 01330 SUBMITTAL PROCEDURES:

SD-01 Data

Cabinets and Countertops; FIO;AR.

Manufacturer's printed data, catalog cuts, installation and cleaning instructions.

SD-04 Drawings

Cabinets and Countertops; GA|ED.

Drawings showing each type of cabinet and related item, and clearly indicating the complete plan, location, and elevations of the cabinets and accessories and pertinent details of construction, fabrication, and attachments.

SD-09 Reports

Cabinets and Countertops; FIOAR.

Test reports certifying that all cabinets comply with the requirements of KCMA ANSI/KCMA A161.1. Tests shall be conducted by independent laboratories approved by KCMA. KCMA certification seals affixed to the cabinets will be accepted in lieu of certified test reports.

SD-14 Samples

Cabinets and Countertops; GA|AR.

In lieu of individual samples, complete minimum size cabinets may be furnished as samples. Mock-up units are not acceptable. Samples shall be of sufficient size to show color, pattern, and method of assembly.

a. Counter top and backsplash - One section, containing both.

b. Door and drawer front - One of each, with hardware mounted.

c. Melamine plastic color samples approximately 50 x 75 mm size.

d. Stain/color samples approximately 50 x 75 mm size.

1.4 DELIVERY AND STORAGE

Cabinets shall be delivered to the jobsite wrapped in a protective covering. Cabinets shall be stored in accordance with manufacturer's recommendations in an adequately ventilated, dry location that is free of dust, water, or other contaminants and in a manner to permit access for inspection and handling. Cabinets shall be handled carefully to prevent damage to the surfaces. Damaged items that cannot be restored to like-new condition shall be replaced.

PART 2 PRODUCTS

2.1 CABINETS

Wall and base cabinets shall be of the same construction and same outside appearance. Door design shall be framed inset hardwood panels from vendors standard styles. Shelves shall be fully adjustable as indicated. Adjustable shelves shall be capable of adjusting on approximately 75 mm increments. Shelves shall be supported by self-locking clips or wood dowels. Dowels shall be approximately 8 mm in diameter by40 mm long. Dowels shall be inserted into borings for the shelf adjustments. Shelves shall be minimum 13 mm thick plywood or minimum 13 mm thick 20 kg density particle board. Drawer fronts shall be 11 mm solid wood panel. 16 mm thick, 20 kg density particle board core.

Hardwood filler strips shall be provided as needed to fill all gaps between cabinets and walls.

2.1.1 Frame Type Cabinets

The cabinets shall be constructed with frame fronts and solid ends, or frame construction throughout. Frame members shall be 19 mm thick by 38 mm wide; kiln-dried hardwood, glued together, and shall be either mortised and tenoned, dovetailed or doweled, nailed, stapled or screwed. Top and bottom corners shall be braced with either hardwood blocks that are glued together with water resistant glue and nailed in place, or metal or plastic corner braces. Backs of wall cabinets shall be 3 mm thick plywood, tempered hardboard or 9 mm thick, 20 kg density particle board. Backs of base and tall cabinets shall be9 mm thick hardwood or 9 mm thick, 20 kg density particle board. Bottoms of cabinets shall be minimum 9 mm thick plywood 20 kg density particle board or good grade plywood and shall be braced with wood members glued in place. Cabinet ends shall be 9 mm thick, 20 kg density particle board.

2.2 COUNTERTOPS AND BACKSPLASH

Countertop and backsplash shall be constructed of 19 mm thick plywood and shall be post formed cove type. Cove type shall be a single unit with self-edging and plastic laminate coved at the juncture of the countertop and backsplash. Edging and trim shall consist of plastic laminate cut and fitted to all exposed edges. End splashes constructed of 19 mm plywood or 19 mm thick, 20 kg density particle board core shall be supplied.

2.3 Sink Rims

Sink rims shall be of the corrosion resistant steel clamping type, sized to the sink, and a standard product of a manufacturer regularly producing this type of equipment.

2.4 FINISH

2.4.1 Cabinet Finish

Cabinets shall be provided with a factory-applied durable finish in accordance with KCMA ANSI/KCMA A161.1 requirements and of a type standard with the manufacturer. Natural finish wood doors, drawer fronts, cabinet fronts, and exposed cabinet sides shall be fabricated of wood which will be free of extreme color variations within each panel or between adjacent panels. Exposed exterior surfaces shall be hardwood or grade A-A hardwood veneer with natural stain and sprayed on factory applied finish.

2.4.2 Melamine Laminated Interior Cabinet Finish

Plywood, particle board or tempered hardboard cabinet backs shall be finished with a melamine laminate on the exposed side. Particle board shelves shall be covered on both sides with a laminated melamine finish. Melamine laminate shall conform to the requirements of NEMA LD 3 and laminate adhesive shall be contact type applied to both surfaces.

2.4.3 Melamine Laminates on Countertops

Continuous sheets of longest lengths practicable shall be provided. Joints in surface sheeting shall be tight and flush and held to a practicable minimum. When the countertop and backsplash are two separate units, GP50 plastic laminate shall be used. When the countertop and backsplash are one unit, PF42 plastic laminate shall be used. Plastic laminate shall conform

to the requirements of NEMA LD 3 and plastic laminate adhesive shall be contact type applied to both surfaces. For fully formed and cove type countertops, the post-forming plastic laminate shall not be bent to a radius smaller than the limit recommended by the plastic manufacturer.

2.4.4 Backer Sheets

Backer Sheets of high pressure plastic laminate, shall conform to NEMA LD 3, Grade BK20 and shall be applied to the underside of all core material.

2.5 HARDWARE

Hardware shall conform to BHMA ANSI/BHMA A156.9, shall be suitable for kitchen cabinet use, and shall include all miscellaneous hardware for a complete installation. Door hinges shall be self-closing type. Drawer runners shall have nylon rollers standard with the manufacturer. Hardware and fastenings for doors and drawers with particle board cores shall be of the through-bolt type. Hardware shall be manufactures standard type with a finish of 611, 637, or 666 as per BHMA ANSI/BHMA A156.18.

2.6 COLOR, TEXTURE, AND PATTERN

Design, color, and finish shall be as indicated.

PART 3 EXECUTION

3.1 INSTALLATION

Cabinets shall be installed level, plumb, and true to line, and shall be attached to the walls or floors with suitable devices to securely anchor each unit. Countertops, accessories, and hardware shall be installed as indicated. Installation shall be in accordance with the manufacturer's approved printed instructions. The inner edge of sink cut-outs in laminated plastic tops shall be painted with a coat of semigloss enamel paint and sink flanges shall be set in a bed of sealant. Closer and filler strips and finish moldings shall be provided as required. Prior to final acceptance, doors shall be aligned, and hardware shall be adjusted.

3.2 CLEANING

Cabinet and countertop surfaces shall be cleaned in accordance with manufacturer's instructions.

-- End of Section --

SECTION 12490

BLINDS, VENETIAN (AND AUDIO VISUAL)

PART 1 GENERAL

1.1 REFERENCES

The publications listed below form a part of this specification to the extent referenced. The publications are referred to in the text by the basic designation only.

FEDERAL SPECIFICATIONS (FS)

FS AA-V-00200 (Rev. B) Venetian Blinds

1.2 SUBMITTALS

Government approval is required for submittals with a "GA" designation; submittals having an "FIO" designation are for information only. The following shall be submitted in accordance with Section 01330 SUBMITTAL PROCEDURES:

SD-01 Manufacturer's Catalog Data

Blinds;GA|ED.

Catalog cuts, brochures and other information to describe products.

SD-03 Manufacturer's Standard Color Charts

Blinds; GA|ED

SD-04 Drawings

Blind Details; GA|ED

Submit sufficient detail to verify installation method and compliance with requirements. Include mounting details.

SD-14, Samples

Blinds GA|ED

Submit one complete unit of each type specified, labeled for identification. Identification and approval marks shall remain undisturbed until final acceptance. Colors shall be as specified in paragraph entitled "Colors for Slats, Tape, Cords, and Exposed Metal."

1.3 DELIVERY AND STORAGE

Deliver the blinds to the site in the manufacturer's original containers with the manufacturer's name and container contents clearly labeled. Store in a safe, dry, clean, and well-ventilated area. Do not open containers until needed for installation unless verification inspection is required.

PART 2 PRODUCTS

2.1 BLINDS

2.1.1 Blind Units

FS AA-V-00200, Type II, 25 mm slats, except as modified herein.

2.1.2 Size

As indicated.

2.1.3 Slats

Steel for Type II venetian blinds.

2.1.4 Ladders

Ladder tapes plastic or woven synthetic for Type I, 100 percent polyester, woven or braided for Type II.

2.1.5 Cords

Braided polyester or synthetic fiber, ends heat-fused, terminated with a plastic tassel, or continuous.

2.1.6 Tilting Device

Locate on the right side.

2.1.7 Lifting Cord Locks

Locate on the same side as the tilting device enabling the blind to stop of window opening.

2.1.8 Holddown or Sway-Stop Brackets

Provide where indicated.

2.1.9 Color for Slats, Tape, Cords, and Exposed Metal

One color as selected from the manufacturer's standard color samples.

PART 3 EXECUTION

3.1 INSTALLATION

Install blinds after the work of other trades, including painting, is substantially done. Install blinds level and in accordance with manufacturer's recommended installation instructions as approved. Isolate metal parts from direct contact with concrete, mortar, or dissimilar metals. Ensure blinds installed in recessed pockets can be removable without disturbing the pocket. The entire blind, when retracted, shall be contained behind the pocket. For blinds installed outside the jambs and mullions, overlap each jamb and mullion 20 mm or more when the jamb and mullion sizes permit. Include all hardware, brackets, anchors, fasteners, and accessories necessary for a complete, finished installation.

3.2 LOCATION

Install blinds at locations specified. Provide the required quantity of blinds and carefully check the dimensions of all openings in the facility for exact sizing of the blinds to be provided.

-- End of Section --

SECTION 13080

SEISMIC PROTECTION FOR MECHANICAL, ELECTRICAL EQUIPMENT

PART 1 GENERAL

1.1 REFERENCES

The publications listed below form a part of this specification to the extent referenced. The publications are referred to in the text by basic designation only.

AMERICAN SOCIETY FOR TESTING AND MATERIALS (ASTM)

ASTM A 36	(1996) Carbon Structural Steel
ASTM A 53	(1995a) Pipe, Steel, Black and Hot-Dipped, Zinc-Coated Welded and Seamless
ASTM A 153	(1996) Zinc Coating (Hot-Dip) on Iron and Steel Hardware
ASTM A 307	(1994) Carbon Steel Bolts and Studs, 60,000 PSI Tensile Strength
ASTM A 500	(1993) Cold-Formed Welded and Seamless Carbon Steel Structural Tubing in Rounds and Shapes
ASTM A 563	(1994) Carbon and Alloy Steel Nuts
ASTM A 603	(1994) Zinc-Coated Steel Structural Wire Rope
ASTM A 653	(1996) Steel Sheet, Zinc-Coated (Galvanized) or Zinc-Iron Alloy-Coated (Galvannealed) by the Hot-Dip Process

AMERICAN SOCIETY OF MECHANICAL ENGINEERS (ASME)

ASME B18.2.1	(1981; Supple 1991; R 1992) Square and Hex Bolts and Screws (Inch Series)
ASME B18.2.2	(1987; R 1993) Square and Hex Nuts (Inch Series)

INTERNATIONAL CONFERENCE OF BUILDING OFFICIALS (ICBO)

ICBO-01	(1994) Uniform Building Code (3 Vol.)

1.2 SYSTEM DESCRIPTION

1.2.1 General

The requirements for seismic protection measures described in this section shall be applied to mechanical/electrical equipment and systems specified herein. Seismic protection requirements shall be in accordance with ICBO-01

using an importance factor of 1 and shall be provided in addition to any other requirements called for in other sections of these specifications. This facility shall be designed as being in seismic zone 1; no other zone values shall be used to establish bracing requirements. Lateral support against earthquake induced forces shall be accomplished by positive attachments without consideration of friction resulting from gravity loads.

1.2.2 Mechanical/Electrical Equipment

Mechanical/electrical equipment shall include the following items to the extent required on the drawings or in other sections of these specifications:

Boilers
Water Heaters
Expansion Air Separator Tanks
Water Chiller Units
Control Panels
Pumps with Motors
Fan Coil Units
Transformers
Switchboards (Floor Mounted)
Unit Heaters/Cabinet Unit Heaters
Exhaust and Return Fans
Computer Room Air Conditioning Unit
Cable Trays
Engine-Driven Generators
Air Handling Units
Switchgear
Shot Feeders

1.2.3 Equipment and Systems

The bracing for the following mechanical/electrical equipment and systems shall be developed by the Contractor in accordance with the requirements of this specification: See paragraph no. 1.2.2 above.

1.2.4 Exclusion

Seismic protection of piping for fire protection systems shall be installed as specified in Sections 15330 WET PIPE SPRINKLER SYSTEM, FIRE PROTECTION.

1.3 SUBMITTALS

Government approval is required for submittals with a "GA" designation; submittals having an "FIO" designation are for information only. The following shall be submitted in accordance with Section 01330 SUBMITTAL PROCEDURES:

SD-01 Data

Miscellaneous Equipment; GA|ED.

Copies of the design calculations with the detail drawings. Calculations shall be stamped by a registered engineer and shall verify the capability of structural members to which bracing is attached for carrying the load from the brace.

SD-04 Drawings

Resilient Vibration Isolation Devices; GA|ED. Miscellaneous Equipment; GA|ED.

Detail drawings along with catalog cuts, templates, and erection and

installation details, as appropriate, for the items listed. Submittals shall be complete in detail; shall indicate thickness, type, grade, class of metal, and dimensions; and shall show construction details, reinforcement, anchorage, and installation with relation to the building construction.

PART 2 PRODUCTS

2.1 MATERIALS AND EQUIPMENT

Materials and equipment shall conform to the requirements specified below:

2.1.1 Bolts and Nuts

Squarehead and hexhead bolts, and heavy hexagon nuts, ASME B18.2.1, ASME B18.2.2, or ASTM A 307 for bolts and ASTM A 563 for nuts. Bolts and nuts used underground and/or exposed to weather shall be galvanized in accordance with ASTM A 153.

2.1.2 Sway Bracing

Material used for members listed in this section and on the drawings, shall be structural steel conforming with the following:

a. Plates, rods, and rolled shapes, ASTM A 36.

b. Wire rope, ASTM A 603.

c. Tubes, ASTM A 500, Grade B.

d. Pipes, ASTM A 53, Type E or S, Grade B.

e. Light gauge angles, less than 6 mm thickness, ASTM A 653.

PART 3 EXECUTION

3.1 ANCHOR BOLTS

3.1.1 Cast-In-Place

Floor or pad mounted equipment shall use cast-in-place anchor bolts, except as specified below. One nut shall be provided on each bolt. Anchor bolts shall conform to the following tabulation for the various equipment weights and specified seismic zone or the manufacturer's installation recommendations, whichever is the most stringent, unless otherwise shown on the drawings. Anchor bolts that exceed the normal depth of equipment foundation piers or pads shall either extend into concrete floor or the foundation shall be increased in depth to accommodate bolt lengths.

3.1.2 Minimum Bolt Sizes, Cast-In-Place Anchor Bolts

Maximum Equipment Weight (Kg)	Minimum Bolt Sizes (mm)* Zone 1
225	13
450	13
2250	13
4500	13
9000	13

Maximum Equipment Weight (Kg)	Minimum Bolt Sizes (mm)* Zone 1
13500	13
22500	13
45000	13

*Based on four bolts per item, a minimum embedment of 12 bolt diameters, a minimum bolt spacing of 16 bolt diameters and a minimum edge distance of 12 bolt diameters. Equivalent total cross-sectional area shall be used when more than four bolts per item are provided. Anchor bolts shall conform to ASTM A 307. Anchor bolts shall have an embedded straight length equal to at least 12 times nominal diameter of the bolt.

3.2 RESILIENT VIBRATION ISOLATION DEVICES

Selection of anchor bolts for vibration isolation devices for equipment base and foundations shall follow the same procedure as in paragraph ANCHOR BOLTS except that an equipment weight equal to five times the actual equipment weight shall be used.

3.2.1 Resilient and Spring-Type Vibration Devices

Vibration isolation devices shall be selected so that the maximum movement of equipment from the static deflection point shall be 15 mm.

3.3 EQUIPMENT SWAY BRACING

3.3.1 Suspended Equipment

Equipment sway bracing shall be provided for items supported from overhead floor or roof structures. Braces shall consist of angles, rods, wire rope, bars, or pipes arranged as shown and secured at both ends with not less than 13 mm (1/2 inch) bolts. Braces shall conform to paragraph Maximum Length for Anchor Braces. Sufficient braces shall be provided for equipment to resist a horizontal force equal to 0.28 times the weight of equipment without exceeding safe working stress of bracing components. Details of equipment bracing shall be submitted for approval. In lieu of bracing with vertical supports, these items may be supported with hangers inclined at 45 degrees directed up and radially away from equipment and oriented symmetrically in 90-degree intervals on the horizontal plane, bisecting the angles of each corner of the equipment, provided that supporting members are properly sized to support operating weight of equipment when hangers are inclined at a 45-degree angle.

3.3.2 Floor or Pad Mounted Equipment

3.3.2.1 Shear Resistance

Floor mounted equipment shall be bolted to the floor. Requirements for the number and installation of bolts to resist shear forces shall be in accordance with paragraph ANCHOR BOLTS.

3.4 MISCELLANEOUS EQUIPMENT

3.4.1 Rigidly Mounted Equipment

The following specific items of equipment to be furnished under this contract shall be constructed and assembled to withstand a horizontal

lateral force of 0.06 times the operating weight of the equipment, at vertical center of gravity of the equipment without causing permanent deformation, dislocations, separation of components, or other damage, which would render the equipment inoperative for significant periods of time following an earthquake.

Rigidly Mounted Equipment

Boilers
Chillers
Air-Handling Units
Substations
Transformers
Switch Boards and Switch Gears
Motor Control Centers
Free Standing Electric Motors

-- End of Section --

SECTION 13110

CATHODIC PROTECTION SYSTEM (SACRIFICIAL ANODE)

PART 1 GENERAL

1.1 REFERENCES

The publications listed below form a part of this specification to the extent referenced. The publications are referred to in the text by basic designation only.

NATIONAL ASSOCIATION OF CORROSION ENGINEERS (NACE)

NACE RP0169	(1996) Control of External Corrosion on Underground or Submerged Metallic Piping Systems

NATIONAL FIRE PROTECTION ASSOCIATION (NFPA)

NFPA 70	(1996; Errata) National Electrical Code

UNDERWRITERS LABORATORIES (UL)

UL 510	(1994) Insulating Tape

1.2 GENERAL REQUIREMENTS

1.2.1 Services of Corrosion Engineer

The Contractor shall obtain the services of a corrosion engineer to design, supervise and to inspect the installation of the cathodic protection system. Provide Cathodic protection for relocated gas line (approximately 275 meters of 155 mm gas line) and provide insulating joint between old and new gas lines. Provide Cathodic Protection for new building service gas line (spur to meter is 35 mm - 35 m, from meter to DIS Facility 103 mm - 20 m). Provide Cathodic Protection for DIS Facility water line spur off building water line loop (155 mm - 20 m) and provide insulating joint at loop/spur connection. Corrosion Engineer refers to a person, who, by reason of his knowledge of the physical sciences and the principles of engineering and mathematics, acquired by professional education and related practical experience, is qualified to engage in the practice of corrosion control on buried or submerged metallic piping systems and metallic tanks. Such person may be a licensed professional engineer or may be a person certified as being qualified by the National Association`of Corrosion Engineers if such licensing or certification includes suitable experience in corrosion control on buried or submerged metallic piping systems and metallic tanks. The corrosion engineer shall insure that the cathodic protection system is installed, tested, and placed into service in accordance with the requirements specified.

1.2.2 Rules

The installation shall conform to the applicable rules of NFPA 70.

1.3 SUBMITTALS

Government approval is required for submittals with a "GA" designation; submittals having an "FIO" designation are for information only. The following shall be submitted in accordance with Section 01330 SUBMITTAL PROCEDURES:

SD-01 Data

Cathodic Protection System; GA|ED.

Manufacturer's Catalog Data.

Qualifications; FIO;AO.

Evidence of qualifications of the corrosion engineer.

SD-04 Drawings

Cathodic Protection System; GA|ED.

Detail drawings consisting of design calculations, a complete list of equipment and material including manufacturer's descriptive and technical literature, catalog cuts, and installation instructions. Detail drawings shall contain complete wiring and schematic diagrams and any other details required to demonstrate that the system has been coordinated and will function properly as a unit.

SD-09 Reports

Tests and Measurements; GA|ED.

Test reports in booklet form tabulating all field tests and measurements performed, upon completion and testing of the installed system.

PART 2 PRODUCTS

2.1 ANODES

2.1.1 Magnesium Anodes

Magnesium anodes shall be magnesium-manganese corresponding to the applicable chemical composition listed in the following table:

PERCENT BY WEIGHT

ELEMENT	MG-MN ALLOY
Aluminum	0.010 Max.
Zinc	
Manganese	0.50 - 1.30
Copper	0.02 Max.
Silicon	
Iron	0.03 Max.
Nickel	0.001 Max.
Others	0.05 each or 0.30 Max. Total
Magnesium	Balance

2.1.2 Connecting Wire

Wire shall be No. 12 AWG solid copper wire, not less than 3 m long, unspliced, complying with NFPA 70, Type RHH insulation. Connecting wires for magnesium anodes shall be factory installed with the place of emergence from the anode in a cavity sealed flush with a dielectric sealing compound.

2.1.3 Artificial Backfill

Anodes shall be factory packaged with an artificial backfill in a water permeable fabric sack or cardboard container. Anodes shall be packaged on a vibrating platform to attain dense packing, and centering shall be assured by means of spacers.

Artificial backfill shall have the following composition:

Material	Approximate Percent by Weight
Gypsum	75
Bentonite	20
Sodium Sulfate	5
Total	100

2.2 MISCELLANEOUS MATERIALS

2.2.1 Electrical Wire

Wire shall be No. 10 AWG stranded copper wire with NFPA 70, Type RHW-USE insulation. Connecting wire splicing shall be copper compression connections made for the purpose or exothermic welds following instructions of the manufacturer. Split-bolt connections shall not be used.

2.2.2 Joint, Patch, Seal, and Repair Coating

Sealing and dielectric compound shall be a black, rubber based compound that is soft, permanently pliable, tacky, moldable, and unbacked. Compound shall be applied as recommended by the manufacturer, but not less than 12.7 mm thick.

Coating compound shall be cold-applied coal-tar base mastic, hot-applied coal-tar enamel or an approved pipeline wrapping.

Pressure-sensitive vinyl plastic electrical tape shall conform to UL 510.

2.2.3 Preformed Sheaths

Sheaths for encapsulating electrical wire splices to be buried underground shall fit the insulated wires entering the spliced joint.

2.2.4 Epoxy Potting Compound

Compound for encapsulating electrical wire splices to be buried underground shall be a two package system made for the purpose.

PART 3 EXECUTION

3.1 INSTALLATION

Unless otherwise indicated, all equipment shall be installed in accordance with the manufacturer's recommendations.

3.1.1 Anode Installation

Anodes of the size indicated shall be installed at the locations shown. Locations may be changed to clear obstructions if approved. Anodes shall be installed as indicated in a dry condition after any plastic or waterproof protective covering has been completely removed from the water permeable, permanent container housing the anode metal. The anode connecting wire shall not be used for lowering the anode into the hole. The annular space around the anode shall be backfilled with fine earth in 150 mm layers and each layer shall be hand tamped. Care must be exercised not to strike the anode or connecting wire with the tamper. Approximately 20 liters of water shall be applied to each filled hole after anode backfilling and tamping has been completed to a point about 150 mm above the anode. After the water has been absorbed by the earth, backfilling shall be completed to the ground surface level.

a. Single anodes spaced as shown shall be direct connected to the pipeline, allowing adequate slack in the connecting wire to compensate for movement during backfill operation.

b. Resistance wires shall not be used to reduce the current output of individual or group anodes.

c. Connections to ferrous pipe or metal tanks shall be made by exothermic weld methods manufactured for the type of pipe or tank.

d. Electric arc welded connections and other types of welded connections to ferrous pipe and structures shall be approved before use.

3.2 CRITERIA OF PROTECTION

Criteria for determining the adequacy of protection on a buried pipe or tank shall be in accordance with NACE RP0169 and shall be selected by the corrosion engineer as applicable.

3.2.1 Iron and Steel

One of the following methods shall apply:

3.2.1.1 850 MV Negative Voltage

A negative voltage of at least minus 0.85 volt as measured between the pipe or tank and a saturated copper-copper sulfate reference electrode contacting the earth directly over the pipe or tank. Determination of this voltage shall be made with the cathodic system in operation.

3.2.1.2 300 MV Negative Voltage

A negative voltage shift of at least 300 millivolts as measured between the pipe or tank and a saturated copper-copper sulfate reference electrode contacting the earth directly over the pipe or tank. Determination of this voltage shift shall be made with the protective current applied. These criteria apply to pipes or tanks not in electrical contact with dissimilar metals.

3.2.1.3 100 MV Polarization Voltage

A minimum polarization voltage shift of 100 millivolts as measured between the pipe or tank and a saturated copper-copper sulfate reference electrode contacting the earth directly over the pipe or tank. This polarization voltage shift shall be determined by interrupting the protective current and measuring the polarization decay. When the protective current is interrupted, an immediate voltage shift will occur. The voltage reading, after the immediate shift, shall be used as the base reading from which to measure polarization decay.

3.3 TESTS AND MEASUREMENTS

3.3.1 Baseline Potentials

After backfill of the pipe or tank and anodes is completed, but before the anodes are connected to the pipe or tank, the static potential-to-soil of the pipe or tank shall be measured. The locations of these measurements shall be identical to the locations specified for pipe- or tank-to-reference electrode potential measurements. The initial measurements shall be recorded.

3.3.2 Insulation Testing

Before the anode system is connected to the pipe or tank, an insulation test shall be made at each insulating joint or fitting. This test shall demonstrate that no metallic contact, or short circuit exists between the two insulated sections of the pipe or tank. Any insulating fittings installed and found to be defective shall be reported to the Contracting Officer.

3.3.3 Anode Output

As the anodes or groups of anodes are connected to the pipe or tank, current output shall be measured with an approved low resistance ammeter. The values obtained and the date, time, and location shall be recorded.

3.3.4 Pipe/Tank To Reference Electrode Potential Measurements

Upon completion of the installation and with the entire cathodic protection system in operation, electrode potential measurements shall be made using a copper-copper sulfate reference electrode and a potentiometer-voltmeter, or a direct current voltmeter having an internal resistance (sensitivity) of not less than 100,000 ohms per volt and a full scale of 1 or 2 volts. The locations of these measurements shall be identical to the locations used for the baseline potentials. The values obtained and the date, time, and locations of measurements shall be recorded.

3.3.5 Location of Measurements

3.3.5.1 Piping or Conduit

For coated piping or conduit, measurements shall be taken from the reference electrode located in contact with the earth, directly over the pipe. Connection to the pipe shall be made at service risers, valves, test leads, or by other means suitable for test purposes. Measurements shall be made at intervals not exceeding 120 m. In no case shall less than three measurements be made over any length of line. Additional measurements shall

be made at each distribution service riser, with the reference electrode placed directly over the service line.

3.3.6 Casing Tests

Casing tests before final acceptance of the installation, the electrical separation of carrier pipe from casings shall be tested and any short circuits corrected.

3.3.7 Interference Testing

Before final acceptance of the installation, interference tests shall be made with respect to any foreign pipes or tanks in cooperation with the owner of the foreign pipes or tanks. A full report of the tests giving all details shall be made.

3.3.8 Recording Measurements

All pipe/tank to soil potential measurements including initial potentials where required shall be recorded. The Contractor shall locate, correct and report to the Contracting Officer any short circuits to foreign pipes or tanks encountered during checkout of the installed cathodic protection system. Pipe/Tank to soil potential measurements are required on as many pipes or tanks as necessary to determine the extent of protection or to locate short-circuits.

3.4 PIPE JOINTS

3.4.1 Electrical Continuity

Underground pipe shall be electrically continuous except at places where electrically insulating joints are specified. Pipe joined by means other than welding shall meet electrical continuity requirements. The following mechanical joints that are not factory designed to provide electrical continuity shall be bonded by installing a metallic bond across the joint. The bonding connections shall be made by the exothermic welding process. Mechanical joints designed to provide electrical continuity shall meet manufacturer's published standards.

3.4.2 Coating

a. Mechanical joints and fittings of either the electrically conductive or insulating type shall be coated with an underground type dielectric coating system. Where external electrical continuity bonds are installed across mechanical joints, all bare or exposed metal, welds, bare wire and exposed coupling parts shall be coated with a coating system.

b. Couplings and fittings which have a low profile exterior designed to permit tape coating shall be primed and wrapped with an underground type pipe tape following recommendations of the coupling or fitting manufacturer.

c. Couplings and fittings that cannot be properly taped shall be enclosed in a spaced mold manufactured for the purpose,cold applied dielectric compound or hot applied bituminous compound not exceeding 135 degrees C in application temperature.

3.5 DISSIMILAR METALS

3.5.1 Underground Piping

Building waterline radial feed shall be electrically separated by means of electrically insulating joint from the building waterline loop feed. The insulating joint, including the pipe, shall be coated with an underground type dielectric coating for a minimum distance of 10 diameters on each side of the joint.

3.6 CASING

Where a pipeline is installed in a casing under a roadway or railway, the pipeline shall be electrically insulated from the casing and annular space sealed against incursion of water.

-- End of Section --

SECTION 13202

FUEL STORAGE SYSTEMS

PART 1 GENERAL

1.1 REFERENCES

The publications listed below form a part of this specification to the extent referenced. The publications are referred to in the text by basic designation only.

AMERICAN PETROLEUM INSTITUTE (API)

API RP 1110	(1991) Pressure Testing of Liquid Petroleum Pipelines
API RP 1631	(1992) Interior Lining of Underground Storage Tanks
API Spec 5L	(1995) Line Pipe
API Spec 6D	(1994; Supple June 1996) Pipeline Valves (Gate, Plug, Ball, and Check Valves)
API Spec 6FA	(1994) Fire Test for Valves
API Std 594	(1991) Wafer and Wafer-Lug Check Valves

AMERICAN SOCIETY FOR TESTING AND MATERIALS (ASTM)

ASTM A 27/A 27M	(1996) Steel Castings, Carbon, for General Application
ASTM A 36/A 36M	(1996) Carbon Structural Steel
ASTM A 53	(1996) Pipe, Steel, Black and Hot-Dipped, Zinc-Coated, Welded and Seamless
ASTM A 167	(1996) Stainless and Heat-Resisting Chromium-Nickel Steel Plate, Sheet, and Strip
ASTM A 181/A 181M	(1995b) Carbon Steel Forgings, for General-Purpose Piping
ASTM A 182/A 182M	(1996) Forged or Rolled Alloy-Steel Pipe Flanges, Forged Fittings, and Valves and Parts for High-Temperature Service
ASTM A 193/A 193M	(1996) Alloy-Steel and Stainless Steel Bolting Materials for High-Temperature Service
ASTM A 194/A 194M	(1996) Carbon and Alloy Steel Nuts for Bolts for High-Pressure and

	High-Temperature Service
ASTM A 216/A 216M	(1993) Steel Castings, Carbon, Suitable for Fusion Welding, for High-Temperature Service
ASTM A 234/A 234M	(1996b) Piping Fittings of Wrought Carbon Steel and Alloy Steel for Moderate and Elevated Temperatures
ASTM A 307	(1994) Carbon Steel Bolts and Studs, 60 000 PSI Tensile Strength
ASTM A 733	(1993) Welded and Seamless Carbon Steel and Austenitic Stainless Steel Pipe Nipples
ASTM B 687	(1996) Brass, Copper, and Chromium-Plated Pipe Nipples
ASTM F 436	(1993) Hardened Steel Washers
ASTM F 1199	(1988; R 1993) Cast (All Temperature and Pressures) and Welded Pipe Line Strainers (150 psig and 150 degrees F Maximum)
ASTM F 1200	(1988; R 1993) Fabricated (Welded) Pipe Line Strainers (Above 150 psig and 150 degrees F)

AMERICAN SOCIETY OF MECHANICAL ENGINEERS (ASME)

ASME B16.5	(1996) Pipe Flanges and Flanged Fittings
ASME B16.9	(1993) Factory-Made Wrought Steel Buttwelding Fittings
ASME B16.11	(1991) Forged Fittings, Socket-Welding and Threaded
ASME B16.21	(1992) Nonmetallic Flat Gaskets for Pipe Flanges
ASME B16.34	(1988) Valves - Flanged, Threaded, and Welding End
ASME B16.39	(1986; R 1994) Malleable Iron Threaded Pipe Unions Classes 150, 250, and 300
ASME B31.3	(1996; B31.3a) Process Piping
ASME B40.1	(1991) Gauges - Pressure Indicating Dial Type - Elastic Element
ASME BPV IX	(1995; Addenda Dec 1995, Dec 1996) Boiler and Pressure Vessel Code; Section IX, Welding and Brazing Qualifications

AMERICAN WELDING SOCIETY (AWS)

AWS A5.1	(1991) Carbon Steel Electrodes for Shielded Metal Arc Welding
AWS A5.4	(1992) Stainless Steel Electrodes for Shielded Metal Arc Welding

MANUFACTURERS STANDARDIZATION SOCIETY OF THE VALVE AND FITTINGS INDUSTRY (MSS)

MSS SP-58	(1993) Pipe Hangers and Supports - Materials, Design and Manufacture
MSS SP-69	(1996) Pipe Hangers and Supports - Selection and Application

NATIONAL ELECTRICAL MANUFACTURERS ASSOCIATION (NEMA)

NEMA 250	(1991) Enclosures for Electrical Equipment (1000 Volts maximum)

NATIONAL FIRE PROTECTION ASSOCIATION (NFPA)

NFPA 30	(1996; Errata) Flammable and Combustible Liquids Code
NFPA 30A	(1996) Automobile and Marine Service Station Code
NFPA 70	(1996; Errata) National Electrical Code

THE SOCIETY FOR PROTECTIVE COATING (SSPC)

SSPC SP 6	(1994) Commercial Blast Cleaning

UNDERWRITERS LABORATORIES (UL)

UL 142	(1993; Rev Apr 1995) Steel Aboveground Tanks for Flammable and Combustible Liquids
UL 567	(1996; Rev Mar 1997) Pipe Connectors for Petroleum Products and LP-Gas

1.2 SYSTEM DESCRIPTION

The work shall include the design, fabrication and installation of the entire fuel storage and dispensing type system in conformance with pertinent federal, state, and local code requirements. The completed installation shall conform to NFPA 30 and NFPA 30A as applicable.

1.3 SUBMITTALS

Government approval is required for submittals with a "GA" designation; submittals having an "FIO" designation are for information only. The following shall be submitted in accordance with Section 01330 SUBMITTAL PROCEDURES:

SD-01 Data

Fueling System; GA.

Manufacturer's standard catalog data, prior to the purchase or installation of the particular component, highlighted to show brand name, model number, size, options, performance charts and curves, etc., in sufficient detail to demonstrate compliance with contract requirements on all parts and equipment.

Permitting; FIO;AR.

Six copies of all required federal, state, and local permits.

Registration; FIO;AR.

Required tank registration forms, 30 days after contract award, in order for the Contracting Officer to submit the forms to the regulatory agency.

Spare Parts Data; FIO;AR.

Spare parts data for each different item of equipment specified, after approval of detail drawings and not later than 2 months prior to the date of beneficial occupancy. The data shall include a complete list of parts and supplies, with current unit prices and source of supply, a recommended spare parts list for 1 year of operation, and a list of the parts recommended by the manufacturer to be replaced on a routine basis.

SD-04 Drawings

Fueling System; GA|ED.

Detail drawings including a complete list of equipment and materials. Detail drawings shall contain:

(1) Complete piping and wiring drawings and schematic diagrams of the overall system.

(2) Equipment layout and anchorage.

(3) Clearances required for maintenance and operation.

(4) Any other details required to demonstrate that the system has been coordinated and will properly function as a unit.

Monitoring Systems; GA|ED.

Detail drawings of the monitoring system including a complete list of equipment and materials. Drawings shall contain:

(1) An overview drawing which details the leak detection system operation.

(2) An overview drawing which details the liquid level and setpoint monitoring.

(3) Wiring schematics for each part of the fueling system. The schematics shall indicate each operating device along with their normal ranges of operating values (including pressures, temperatures, voltages, currents, speeds, etc.).

(4) Single line diagrams of the system.

(5) Panel layout along with panel mounting and support details.

SD-06 Instructions

Installation; FIO;AR.

Manufacturer's installation instructions and procedures on all parts and equipment.

Framed Instructions; FIO;AR.

Framed instructions for posting, at least 2 weeks prior to construction completion.

Monitoring Systems; FIO;AR.

System diagrams for posting, at least 2 weeks prior to construction completion, including distance markings so that alarm indications can be correlated to leak location in plan view if a cable detection system is used. The diagrams shall include a piping and wiring display map with schematic diagrams from the leak detection system manufacturer. The diagrams shall be framed under glass or laminated plastic and be posted where indicated by the Contracting Officer.

SD-07 Schedules

Tests; FIO;AR.

A letter, at least 10 working days in advance of each test, advising the Contracting Officer of the test. Individual letters shall be provided for each test specified herein.

Demonstrations; GA|ED

A letter, at least 14 working days prior to the proposed training date, scheduling a proposed date for conducting the onsite training.

SD-08 Statements

Experience; FIO;AR.

A letter listing prior projects, the date of construction, a point of contact for each prior project, the scope of work of each prior project, and a detailed list of work performed. The letter shall also provide evidence of prior manufacturer's training, state licensing, and other related information.

Welding; FIO;AR.

A letter listing the qualifying procedures for each welder. The letter shall include supporting data such as test procedures used, what was tested to, etc., and a list of the names of all qualified welders and their identification symbols.

Verification of Dimensions; FIO;AR.

A letter stating the date the site was visited and a listing of all discrepancies found.

Fuel Supply; FIO;AR.

A letter, at least 120 days prior to fuel delivery, stating the amount of fuel required for testing, flushing, cleaning, or startup of the system. The letter shall define the required dates of each fuel delivery necessary.

SD-09 Reports

Tests; GA|ED.

Six copies of each test containing the information described below in bound letter-size booklets. Individual reports shall be provided for the storage tank tests, the piping tests, the system performance tests, the high level alarm test, and the system leak tests. Drawings shall be folded blue lines, with the title block visible.

(1) The date the tests were performed.

(2) A list of equipment used, with calibration certifications.

(3) A copy of measurements taken.

(4) The parameters to be verified.

(5) The condition specified for the parameter.

(6) The inspection results, signed, dated, and certified by the installer. The certification shall state that required procedures were accomplished, that the procedures were conducted in compliance with the plans and specifications.

(7) A description of adjustments performed.

SD-19 Operation and Maintenance Manuals

Operation Manuals; FIO;AR.

Six complete copies of operation manuals in bound letter-size booklets listing step-by-step procedures required for system startup, operation, and shutdown at least two weeks prior to the demonstrations. The manuals shall include the manufacturer's name, model number, service manual, a brief description of each piece of equipment, and the basic operating features of each piece of equipment. The manuals shall include procedures necessary for annual tightness testing of the storage tanks and secondary containment piping.

Maintenance Manuals; FIO;AR.

Six complete copies of maintenance manuals in bound letter-size booklets listing routine maintenance procedures, possible breakdowns and repairs, and a trouble shooting guide at least 2 weeks prior to the demonstrations. The manuals shall include piping, equipment layouts, and simplified wiring and control diagrams of the system as installed.

1.4 QUALIFICATIONS

1.4.1 Experience

Each installation Contractor shall have successfully completed at least 3 projects of the same scope and the same size or larger within the last 6 years. Each installation Contractor shall demonstrate specific installation experience in regard to the specific system installation to be performed. Each installation Contractor shall have taken, if applicable, manufacturer's training courses on the installation of piping, leak detection, and tank management systems and meet the licensing requirements in the state.

1.4.2 Welding

Welding shall be in accordance with qualifying procedures using performance qualified welders and welding operators. Welding tests shall be performed at the work site. Procedures and welders shall be qualified in accordance with ASME BPV IX. Each welder or welding operator shall apply his assigned symbol near each weld he makes as a permanent record. Structural members shall be welded in accordance with Section 05055 WELDING, STRUCTURAL.

1.5 REGULATORY REQUIREMENTS

1.5.1 Permitting

Contractor shall obtain necessary permits in conjunction with the installation of belowground storage tanks as required by federal, state, or local authority.

1.5.2 Registration

Contractor shall obtain and complete all required tank registration forms required by federal, state, and local authorities.

1.6 DELIVERY, STORAGE, AND HANDLING

Stored items shall be protected from the weather and contamination. Proper protection and care of material before, during, and after installation shall be the Contractor's responsibility. Any materials found to be damaged shall be replaced at the Contractor's expense. During installation, piping and similar openings shall be capped to keep out dirt and other foreign matter.

1.7 PROJECT/SITE CONDITIONS

1.7.1 Verification of Dimensions

After becoming familiar with all details of the project, the Contractor shall verify dimensions in the field, and advise the Contracting Officer of any discrepancy before performing any work.

1.7.2 Fuel Supply

Fuel required for the flushing, cleaning, and testing of materials, equipment, piping, meters, pumps, instruments, etc., as specified in this section shall be provided by the Contracting Officer. Fuel will be provided by tank trucks. The Contracting Officer will furnish the tank trucks, operators, equipment, and services required for the tank truck operations. The Contractor shall provide the labor, equipment, appliances, and materials required for the flushing, cleaning, and testing operations. Systems shall not be flushed, cleaned, or tested with any fuel or liquid not intended for final system operation. Fuel used in the system shall

remain the property of the Government. Fuel shortages not attributable to normal handling losses shall be reimbursed to the Government.

1.7.3 Safety Requirements

Exposed moving parts, parts that produce high operating temperatures and pressures, parts which may be electrically energized, and parts that may be a hazard to operating personnel shall be insulated, fully enclosed, guarded, or fitted with other types of safety devices. Safety devices shall be installed so that proper operation of equipment is not impaired.

PART 2 PRODUCTS

2.1 STANDARD PRODUCTS

Materials and equipment shall be standard products of a manufacturer regularly engaged in the manufacturing of such products, which are of a similar material, design and workmanship. The standard products shall have been in satisfactory commercial or industrial use for 2 years prior to bid opening. The 2 year use shall include applications of equipment and materials under similar circumstances and of similar size. The 2 years experience shall be satisfactorily completed by a product which has been sold or is offered for sale on the commercial market through advertisements, manufacturer's catalogs, or brochures. Products having less than a 2 year field service record will be acceptable if a certified record of satisfactory field operation, for not less than 6000 hours exclusive of the manufacturer's factory tests, can be shown. Products shall be supported by a service organization. System components shall be environmentally suitable for the indicated locations. The completed installation shall conform to the applicable requirements of NFPA 30 or NFPA 30A, as applicable.

2.2 NAMEPLATES

Parts and equipment specified herein shall have an attached nameplate to list the manufacturer's name, address, component type or style, model or serial number, catalog number, capacity or size, and the system which is controlled. Plates shall be durable and legible throughout equipment life and made of anodized aluminum. Plates shall be fixed in prominent locations with nonferrous screws or bolts.

2.3 ELECTRICAL WORK

Electrical equipment, motors, and wiring shall be in accordance with Section 16415 ELECTRICAL WORK, INTERIOR. Electrical bonding of materials shall be performed in accordance with NFPA 70.

2.4 MATERIALS IN CONTACT WITH FUEL

Galvanized materials (zinc coated) shall not be allowed in direct contact with any fuel.

2.5 ABOVEGROUND STORAGE TANK

2.5.1 Secondarily Contained (Steel Vaulted) Tank

Tank system shall include a primary storage tank and an integral fully-enclosed secondary containment reservoir. Tank system shall be in accordance with NFPA 30 and NFPA 30A. Tank system shall be designed and

manufactured for horizontal installation. Primary storage tank shall be constructed of single wall steel in accordance with UL 142. Containment reservoir shall be single-wall steel conforming to UL 142. Containment reservoir shall be provided with an access door to allow visual inspection of the secondary containment. The volume of the containment reservoir shall be greater than or equal to 110 percent of the primary tank volume. The primary storage tank shall be supported within the containment reservoir with steel tank saddles, or other similar supports, fabricated and attached by the tank manufacturer. Containment reservoir shall be equipped with a 75 mm drain that includes a full line size carbon steel drainage line and a full line size plug valve. Tank system shall be skid mounted and provided with lifting lugs which allow tank system relocation. Tank system shall include a 19 L (5 gallon) overfill containment which contains spillage of fuel during tank filling. The tank system shall be provided with the manufacturer's standard ladder and platform assembly, except as modified herein. The assembly shall be constructed of structural steel and shall allow access to the top of the tank system. A molded neoprene isolation pad shall be provided under the skid.

2.5.2 Tank Exterior Protective Coating

Tank exterior protective coating shall be the manufacturer's standard except as modified herein.

2.5.3 Tank Interior Protective Coating

Tank shall be provided with an interior protective coating in accordance with API RP 1631 from the tank bottom up to 1 m off the bottom.

2.5.4 Tank Manway

Tank manway shall be provided with a manway cover and an interior tank ladder. Tank manway shall have an internal diameter of 760 mm. Tank manway shall be provided with a matching flanged watertight manway cover. Manway covers shall be constructed of cast steel in accordance with ASTM A 27/A 27M, grade 60-30 as a minimum. Manhole covers shall be for nontraffic. Pipe connections to a tank through a manway cover shall be through welded-in-place double tappered NPT couplings. Interior tank ladder shall be constructed of either fiberglass or steel. If steel, the ladder shall be completely coated in the same fashion as the interior tank bottom coating. The two stringers shall be a minimum 10 mm thick and a minimum 50 mm wide. The rungs shall be a minimum 20 mm rod on 300 mm centers. Members of the ladder shall be securely affixed. Ladder shall be of sufficient length to extend from the bottom of the tank to the top surface of the tank. Ladder shall be rigidly connected to the tank bottom in accordance with the tank manufacturer's standard. Ladder shall be connected to the top of the tank with pipe guides or slip bars to accommodate expansion of the two stringers.

2.5.5 Tank Piping Penetrations

The number and size of tank piping penetrations shall be provided as indicated. Nylon dielectric bushings shall be provided on all pipe connections to a tank. Pipe connections to a tank shall be through welded-in-place double tappered NPT couplings. The termination of fill lines within a tank shall be provided with an antisplash deflector. Tank suction line shall be provided with a footvalve to prevent line drainage.

2.5.6 Tank Cleanout and Gauge Connection

Tank shall be provided with a combination cleanout and gauge connection. The connection shall consist of a 50 mm pipe extending downward through the top of the tank to within 75 mm of the tank bottom. The entire length of pipe inside the tank shall be provided with 13 mm wide by 300 mm long slots at alternate locations. The top of the pipe shall be provided with a bronze top-seal type adapter with a corresponding locking type cap. Tank shall have an interior striker/impact plate attached directly under the cleanout and gauge connection. The striker/impact plate shall be a minimum of 6 mm in thickness, be larger in diameter than the tank penetration, and fit the curvature of the tank bottom.

2.5.7 Tank Atmospheric Venting

Vent pipe shall be in accordance with NFPA 30, NFPA 30A, and UL 142. Vent pipe sizing shall be as indicated.

2.5.8 Tank Emergency Venting

Vent shall be the rupture disc type calibrated to burst at 13.8 kPa (2 psig) pressure, and operate at 80 percent of burst setting. Vent shall comply with NFPA 30. There is no vacuum relief requirement but the disc may be subjected to 1.3 kPa (3 ounces) of vacuum. Discs shall be provided with a flanged end connection. Disc holder shall have a nameplate showing design rating.

2.5.9 Tank Overfill Alarm System

Tank shall be provided with an overfill alarm system. The system shall include a mechanically-actuated float actuator and an alarm panel. The float actuator shall be field adjustable. The alarm panel shall include an alarm light, an audible alarm, and reset capabilities. The alarm panel shall be mounted adjacent to the tank as indicated. The alarm panel shall initiate a minimum 70 decibel audible alarm when the liquid level within a tank reaches the 90 percent full level. The alarm system shall conform to the requirements of paragraph MONITORING SYSTEM.

2.6 TANK GAUGES

2.6.1 Stick Gauge

Tank shall be provided with 2 stick gauges graduated in m and mm. Stick gauge shall be of wood and treated after graduating to prevent swelling or damage from the fuel being stored.

2.6.2 Tank Calibration Charts

Tank shall be furnished with 2 copies of calibrated charts which indicate the liquid contents in L for each 3 mm of tank depth.

2.6.3 Analog Tank Gauge

Each storage tank shall be provided with an automatic analog reading gauge which is directly mounted to a tank's manway cover. Gauge shall be a level sensing, mechanically actuated device which provides the necessary readout in a sealed glass cap contained in a gauge box. Gauge shall be accurate to plus or minus 6 mm and be capable of measuring the liquid level over the full range of a tank's height. Gauge shall have vapor tight seals to prevent condensate from fogging the viewing glass.

2.7 ADAPTERS AND COUPLERS

2.7.1 Tight-Fit Fill Adapter

Adapter shall be bronze and be fitted with a Buna-N or Viton gasket. Adapter shall be the API standard 75 or 100 mm size as required. Adapter shall be a top seal or side seal adapter as required and provide a tight-fit connection to prevent vapor emissions during filling. The adapter shall be provided with a locking cap. The cap shall mate with the adapter and have a latching mechanism which provides a water tight seal. The cap shall provide some type of locking provision and be easily attachable and removable. The cap shall be attached to the tight-fit vapor recovery adapter by a 300 mm section of brass cable or fuel resistant rope.

2.7.2 Dry-Break Coupler

Coupler shall be an API standard and provide a tight-fit connection to prevent vapor emissions during fuel transfer. Coupler shall be compatible with the fuel product being handled and be a female connection. Seals within the coupler shall be Buna-N or Viton. Coupler shall have an internal manually operated shutoff valve. The valve shall have an external operating handle with the valve's position (open or close) clearly labeled. The internal valve shall not be capable of being manually opened unless the coupler is properly connected to a tank truck's tight-fit adapter.

2.8 SUPPLEMENTAL COMPONENTS

2.8.1 Concrete Anchor Bolts

Concrete anchor bolts shall be group II, Type A, class 2 in accordance with ASTM A 307.

2.8.2 Bolts

Bolts shall be in accordance with ASTM A 193/A 193M, Grade B8.

2.8.3 Nuts

Nuts shall be in accordance with ASTM A 194/A 194M, Grade 8.

2.8.4 Washers

Washers shall be in accordance with ASTM F 436, flat circular stainless steel. Washers shall be provided under each bolt head and nut.

2.8.5 Exterior Coating of Miscellaneous Items

Steel surfaces to be externally coated or painted shall be cleaned to a commercial grade blast cleaning finish in accordance with SSPC SP 6prior to the application of the coating. Exterior surfaces, other than stainless steel pipe and flexible connectors, which are not otherwise painted and do not require the application of an exterior coating, as well as all items supplied without factory-applied finish paint, not including primer only items, shall be painted as specified in Section 09900PAINTING, GENERAL.

2.9 MONITORING SYSTEM

2.9.1 Aboveground Vaulted Tanks

The interstitial space of each vaulted tank shall be continuously and automatically monitored to detect breaches in the integrity of the primary tank and the exterior vaulted shell. The interstitial space shall be monitored by an electronic capacitance type liquid sensor capable of distinguishing the difference between hydrocarbons and water. Sensors shall be intrinsically safe for use in Class 1, Division 1, Group D environment as defined by NFPA 70. Sensors shall be easily removed from the tank. Sensors shall be compatible with the electronic monitoring panel.

2.9.2 Electronic Monitoring Panel

Panel shall be tank-mounted and shall be capable of providing an audible and visual alarm in the event of a detected leak. Audible alarms shall be a buzzer sounding at 70 decibels or greater. Each visual alarm shall indicate the type and location of the alarm condition. Visual alarms shall be capable of delineating between individual alarm conditions. Panel shall provide a means of delineating between individual alarm conditions. Panel shall be housed in a NEMA 4 rated enclosure in accordance with NEMA 250. Panel shall have a hinged door to swing left or right (doors shall not swing up or down). Panel using computer memory shall be capable of maintaining current programmable information in the event of a power failure. Panel shall be provided with a manual acknowledge switch which shall be capable of deactivating the audible alarm. The acknowledge switch shall not be capable of deactivating subsequent audible alarms unless depressed manually again for each occurrence. Under no circumstance shall this acknowledgement switch extinguish the visual alarms until the alarm condition has been corrected. Switches shall be an integral component located on the front panel and be either a key switch or push button.

2.10 PIPING COMPONENTS

2.10.1 Product Piping

Piping routinely carrying fuel shall be steel as defined herein.

2.10.2 Vent Piping

Piping shall be single wall steel as defined herein.

2.10.3 Steel Pipe

Carbon steel pipe shall be in accordance with ASTM A 53, Type E or S, Grade B, or API Spec 5L, seamless or electric-weld, Grade B. Pipe smaller than 65 mm shall be Schedule 80. ASTM A 53 pipe 65 mm and larger shall be Schedule 40. API Spec 5L pipe 65 mm and larger shall be Schedule 40S.

2.10.3.1 Connections for Steel Pipe

Connections for pipe or fittings smaller than 65 mm shall be forged, socket weld type, 2000 W.O.G. conforming to ASTM A 182/A 182M and ASME B16.11. Connections for pipe or fittings 65 mm and larger shall be butt weld type conforming to ASTM A 234/A 234M, Grade WPB and ASME B16.9 of the same wall thickness as the adjoining pipe. Piping in inaccessible locations, such as product piping inside of containment piping, shall be welded.

2.10.3.2 Welding Electrodes

Welding electrodes shall be E70XX low hydrogen type conforming to AWS A5.1 or AWS A5.4.

2.10.4 Valves

Portions of a valve coming in contact with fuel shall be compatible with the fuel to be handled. Valves shall have bodies, bonnets, and covers constructed of cast steel conforming to ASTM A 216/A 216M, Grade WCB. Each valve shall have stainless steel stem and trim. Valves shall be suitable for a working pressure of 1900 kPa (275 psig) at 38 degrees C with a weatherproof housing and be provided with flanged end connections unless indicated otherwise. Seats, body seals, and stem seals shall be Viton or Buna-N.

2.10.4.1 Gate

Valve shall be in accordance with API Spec 6D and conform to the fire test requirements of API Spec 6FA Valve shall be of the flexible wedge disc type, conduit disc type, or double disc type. Valve shall be of the rising stem type with closed yoke, or the non-rising stem type equipped with a device to give positive visual indication of the valve's position.

2.10.4.2 Swing Type Check

Valve shall be swing type conforming to API Spec 6D regular type. Check valves shall be the tilting disc, non-slam type. Discs and seating rings shall be renewable without removing from the line. The disc shall be guided and controlled to contact the entire seating surface.

2.10.4.3 Wafer Type Check

Valves shall conform to API Spec 6D and API Std 594. Wafer type check valves may be provided in lieu of swing check valves in piping sizes larger than 100 mm.

2.10.4.4 Ball

Valves 50 mm and larger shall conform to API Spec 6D. Valves smaller than 50 mm shall have one piece bodies and have a minimum bore not less than 55 percent of the internal cross sectional area of a pipe of the same nominal diameter. The ball shall be stainless steel. Valve shall be fire tested and qualified in accordance with API Spec 6FA. Valve shall be non-lubricated and operate from fully open to fully closed with 90 degree rotation of the ball.

2.10.4.5 Plug

Valve shall be in accordance with API Spec 6D. Valve shall be non-lubricated, resilient, double seated, trunnion mounted type with a tapered lift plug capable of 2-way shutoff. Valve shall operate from fully open to fully closed by rotation of the handwheel to lift and turn the plug. Valve shall have weatherproof operators with mechanical position indicators.

2.10.4.6 Globe

Valve shall conform to ASME B16.34.

2.10.4.7 Pressure\Vacuum Vent Relief

Valve pressure and vacuum capacities shall be in accordance with NFPA 30. Valve shall be factory set for 5.2 kPa (12 ounces per square inch) pressure and 430 Pa (1 ounce per square inch) vacuum for FRP tanks and 10.3 kPa (1.5 psi) pressure and 860 Pa (2 ounces per square inch) vacuum for steel tanks. Pressure and vacuum relief shall be provided by a single valve. Valve shall be constructed of cast steel with flanged or threaded end connections. Trim shall be stainless steel. Inner valve pallet assemblies shall have a knife-edged drip ring around the periphery of the pallet to preclude condensation collection at the seats. Pallet seat inserts shall be of a material compatible with the fuel specified to be stored.

2.10.5 Accessories

2.10.5.1 Foot Valve

Foot valve shall be compatible with the fuel to be handled and with the working pressure of the system. Foot valve shall be the double-poppet design. Foot valve shall be provided with a minimum 20 mesh screen on the intake. Foot valve seats shall be the replaceable type. Foot valve shall be capable of passing through a 75 mm pipe or tank flange.

2.10.5.2 Flanges

Flanges installed on equipment, fittings, or pipe shall be Class 150 pound flanges which are rated in accordance with ASME B16.5. Flanges shall be the 1.6 mm (1/16 inch) raised face type, except for connections to FRP pipe. Connections to FRP pipe shall be made with flat face flanges. Stainless steel flanges shall conform to ASTM A 182/A 182M. Aluminum flanges shall conform to ASTM A 182/A 182M, alloy 6061-T6 or alloy 356-T6. Carbon steel flanges shall conform to ASTM A 181/A 181M, Grade 2.

2.10.5.3 Flange Gaskets

Flange gaskets shall be 2 mm (1/16 inch) thick, NBR, and be in accordance with ASME B16.21. Full-face gaskets shall be provided for flat-face flanged pipe joints. Ring gaskets shall be provided for raised-face flanged pipe joints.

2.10.5.4 Steel Coupling

Coupling shall be in accordance with API Spec 5L, seamless, extra heavy, wrought steel with recessed ends.

2.10.5.5 Welded Nipple

Nipple shall be in accordance with ASTM A 733 or ASTM B 687 and of the same material as the product piping.

2.10.5.6 Threaded Union

Threaded unions shall only be used on cast steel piping 50 mm in nominal size or smaller and only where indicated. Union shall be in accordance with ASME B16.39, Class 150.

2.10.5.7 Joint Compound

Joint compounds for any type of piping system shall be resistant to water

and suitable for use with fuel containing 40 percent aromatics.

2.10.5.8 Flexible Connector

Connectors shall conform to requirements of UL 567 and be the flexible metal hose, corrugated type with braided wire sheath covering. Connectors shall have close-pitch annular corrugations and be rated for a working pressure of at least 1900 kPa (275 psig) at 38 degrees C. Connectors shall have a minimum 300 mm live length with flanged end connections. Metal for hose and braided wire sheath shall be stainless steel in accordance with ASTM A 167.

2.10.5.9 Strainer

Strainer shall be in accordance with ASTM F 1199 or ASTM F 1200, except as modified herein. Strainer shall be the cleanable, basket or "Y" type, and be the same size as the pipeline. Strainer body shall be fabricated of cast steel or brass with the bottom drilled and tapped. The body shall have arrows clearly cast on the sides indicating the direction of flow. Strainer shall be equipped with a removable cover and sediment screen. Screen shall be 60 mesh wire screen with larger wire mesh reinforcement. Screen shall be 0.76 mm brass or stainless steel. The ratio of net effective strainer area to the area of the connecting pipe shall be not less than 3 to 1.

2.10.5.10 Pipe Hangers and Supports

Hangers and supports shall be of the adjustable type and conform to MSS SP-58 and MSS SP-69, except as modified herein. The finish of rods, nuts, bolts, washers, hangers, and supports shall be hot-dipped galvanized. Nuts, bolts, washers, and screws shall be Type 316 stainless steel when located under any pier. Miscellaneous metal shall be in accordance with ASTM A 36/A 36M, standard mill finished structural steel shapes, hot-dipped galvanized.

a. Pipe Protection Shields. Shields shall conform to MSS SP-58 and MSS SP-69, Type 40, except material shall be Type 316 stainless steel. Shields shall be provided at each slide type pipe hanger and support.

b. Low Friction Supports. Supports shall have self-lubricating anti-friction bearing elements composed of 100 percent virgin tetrafluoroethylene polymer and reinforcing aggregates, prebonded to appropriate backing steel members. The coefficient of static friction between bearing elements shall be 0.06 from initial installation for both vertical and horizontal loads and deformation shall not exceed 0.05 mm (0.002 inch) under allowable static loads. Bonds between material and steel shall be heat cured, high temperature epoxy. Design pipe hangers and support elements for the loads applied. Anti-friction material shall be a minimum of 2.3 mm (0.09 inch) thick. Steel supports shall be hot-dipped galvanized. Units shall be factory designed and manufactured.

2.10.5.11 Exterior Coating for Aboveground Steel Piping

Aboveground steel piping shall be painted as specified in Section 09900 PAINTING, GENERAL. Paint shall be rated for use on hot metal surfaces up to 230 degrees C and for surfaces exposed to the weather. Color of the

finish coat shall be aluminum.

2.10.5.12 Pressure Gauge

Gauge shall conform to ASME B40.1. Gauge shall be single style pressure gauge for fuel with 115 mm dial, have brass or aluminum case, bronze tube, stainless steel ball valve, pressure snubbers, and scale range for the intended service.

PART 3 EXECUTION

3.1 INSTALLATION

Storage tanks shall be handled with extreme care to prevent damage during placement and shall be installed in accordance with the manufacturer's installation instructions and NFPA 30 or NFPA 30A, as applicable. The exterior surface of each tank shall be inspected for obvious visual damage prior to and proceeding the placement of each storage tank. Surface damage to a storage tank shall be corrected according manufacturer's requirements before proceeding with the system installation.

3.1.1 Equipment

Equipment shall be properly leveled, aligned, and secured in place in accordance with manufacturer's instructions. Supports shall be provided for equipment, appurtenances, and pipe as required. Floor-mounted pumps shall be provided with mechanical vibration isolators or a vibration isolation foundation. Anchors, bolts, nuts, washers, and screws shall be installed where required for securing the work in place. Sizes, types, and spacings of anchors and bolts not indicated or specified shall be as required for proper installation. Each dispenser and dispenser sump shall be installed in accordance with manufacturers' instructions. Dispensing units shall be isolated from the piping during flushing and cleaning operations.

3.1.2 Piping

Piping shall be inspected, tested, and approved before burying, covering, or concealing. Piping shall be installed straight and true to bear evenly on supports. Piping shall be free of traps, shall not be embedded in concrete pavement, and shall drain toward the corresponding storage tank. Any pipe, fittings, or appurtenances found defective after installation shall be replaced. Piping connections to equipment shall be as indicated or as required by the equipment manufacturer. Pipe and accessories shall be handled carefully to assure a sound, undamaged condition. The interior of the pipe shall be thoroughly cleaned of foreign matter and shall be kept clean during installation. The pipe shall not be laid in water or stored outside unprotected when weather conditions are unsuitable. When work is not in progress, open ends of pipe and fittings shall be securely closed so that water, earth, or other substances cannot enter the pipe or fittings. Cutting pipe, when necessary, shall be done without damage to the pipe. Pipe shall be reamed to true internal diameter after cutting to remove burrs. Changes in pipe sizes shall be made through tapered reducing pipe fittings. Fuel supply piping from a storage tank shall extend to within 150 mm of the tank's bottom.

3.1.2.1 Aboveground Piping

Pipe sections shall be installed as indicated and be complete prior to

performing any piping tests.

3.1.2.2 Pipe Hangers and Supports

Additional hangers and supports shall be installed for concentrated loads in piping between hangers and supports, such as for valves. Miscellaneous steel shapes as required shall be installed in accordance with ASTM A 36/A 36M. Pipe supports shall be installed in accordance with MSS SP-58and MSS SP-69. Pipe spacing shall be as follows:

Nominal Pipe Size (mm)	25 and Under	40	50	80	100	150	200	250	300
Maximum Hanger Spacing (m)	2.1	2.7	3	3.7	4.3	5.2	5.8	6.7	7.0

3.1.2.3 Pipe Sleeve

Piping passing through concrete or masonry construction shall be fitted with sleeves. Sleeve shall be of sufficient length to pass through the entire thickness of the associated structural member and be large enough to provide a minimum clear distance of 13 mm between the pipe and sleeve. Sleeves through concrete shall be 0.91 mm steel, fiberglass, or other material as approved by the Contracting Officer. Sleeves shall be accurately located on center with the piping and securely fastened in place. The space between a sleeve and a pipe shall be caulked and sealed as specified in Section 07900 JOINT SEALING. In fire walls and fire floors, both ends of a pipe sleeve shall be caulked with UL listed fill, void, or cavity material.

3.1.2.4 Pipe Anchor

Where steel piping is to be anchored, the pipe shall be welded to the structural steel member of the anchor and the abraded area shall be patched with protective coating or covering as specified.

3.1.3 Field Painting

Painting required for surfaces not otherwise specified, and finish painting of items only primed at the factory, shall be painted and have identification markings applied as specified in Section 09900 PAINTING, GENERAL. Stainless steel and aluminum surfaces shall not be painted. Prior to any painting, surfaces shall be cleaned to remove dust, dirt, rust, oil, and grease.

3.1.4 Framed Instructions

Framed instructions shall include equipment layout, wiring and control diagrams, piping, valves, control sequences, and typed condensed operation instructions. The condensed operation instructions shall include preventative maintenance procedures, methods of checking the system for normal and safe operation, and procedures for safely starting and stopping the system. The framed instructions shall be framed under glass or laminated plastic and be posted where directed by the Contracting Officer. The framed instructions shall be posted before acceptance testing of the system.

3.2 TESTS

3.2.1 Aboveground Storage Tank Tightness Tests

A tightness test shall be performed on each aboveground storage tank. The tests shall be performed prior to making piping connections. Tests shall be capable of detecting a 0.1 mL/s (0.1 gph) leak rate from any portion of the tank while accounting for effects of thermal expansion or contraction. Gauges used in the tightness tests shall have a scale with a maximum limit of 69 kPa. Each storage tank shall be pressurized with air to 35 kPa and monitored for a drop in pressure over a 2-hour period during which there shall be no drop in pressure in the tank greater than that allowed for pressure variations due to thermal effects. The pneumatic test shall be performed again in the event a leak is discovered.

3.2.2 Manufacturer's Tank Tests

Following the tank tightness test, each storage tank shall be leak tested in accordance with the manufacturer's written test procedure if the manufacturer's test procedure is different from the tightness tests already performed. Any test failure shall require corrective action and retest.

3.2.3 Piping Pneumatic and Hydrostatic Tests

Testing shall comply with the applicable requirements of ASME B31.3, NFPA 30, and the requirements specified herein. Care shall be taken not to exceed pressure rating of various fittings. Hydrostatic testing shall be performed using fuel as the liquid. Water shall not be introduced into the system for testing. To facilitate the pneumatic and hydrostatic tests, various sections of the piping system may be isolated and tested separately. Where such sections terminate at flanged valve points, the line shall be closed by means of blind flanges in lieu of relying on the valve. Tapped flanges shall be provided to allow a direct connection between the piping and the air compressor and/or pressurizing pump. Tapped flanges shall also be used for gauge connections. Taps in the permanent line will not be permitted. Gauges shall be subject to testing and approval. In the event leaks are detected, the pipe shall be repaired and the test repeated. Following satisfactory completion of each pneumatic and hydrostatic test, the pressure shall be relieved and the pipe immediately sealed. Provision shall be made to prevent displacement of the piping during testing. Personnel shall be kept clear of the piping during pneumatic testing. Equipment such as pumps, tanks, and meters shall be isolated from the piping system during the testing.

3.2.3.1 Pneumatic Procedures for Product and Vent Piping

Piping to be installed underground shall not receive field applied covering at the joints or be covered by backfill until the piping has passed the pneumatic test described herein. A pneumatic test pressure shall be applied in increments. A preliminary 170 kPa test shall be applied. The pressure shall be maintained while soapsuds or equivalent materials are applied to the exterior of the piping. While applying the soapsuds, the entire run of piping, including the bottom surfaces, shall be visually inspected for leaks (bubble formations). Leaks discovered shall be repaired in accordance with manufacturer's instructions and retested. Following the preliminary test, the piping shall be tested at a pressure of 340 kPa for not less than 2 hours, during which time there shall be no drop in pressure in the pipe greater than that allowed for thermal expansion and contraction. The pressure source shall be disconnected during the final test period. Any leaks revealed by the test shall be repaired and the test repeated.

3.2.3.2 Hydrostatic Procedures for Product Piping

Upon completion of pneumatic testing and after backfilling, each piping system shall be hydrostatically tested with fuel at not more than 1900 kPa (275 psig) in accordance with ASME B31.3 and API RP 1110, with no leakage or reduction in gauge pressure for 4 hours. The Contractor shall furnish electricity, instruments, connecting devices, and personnel for the test. Fuel will be furnished by the Government. Defects in work performed shall be corrected at the Contractor's expense, and the test repeated until the work is proven to be in compliance with the testing procedures. Any release of fuel (no matter the size) during testing shall be immediately contained, the pressure on the piping relieved, and the piping drained of fuel. The Contracting Officer shall be notified immediately of a fuel release, the exact location, an estimated quantity of release, and a discussion of the containment measures taken.

3.2.4 System Performance Tests

After all components of the system have been properly adjusted, the system shall be tested to demonstrate that the system meets the performance requirements for which it was designed. The maximum rated capacity of the system shall be tested by using several tank trucks simultaneously, if applicable. The use of tank trucks shall be coordinated with the Contracting Officer prior to testing. If any portion of the system or any piece of equipment fails to pass the tests, the Contractor shall make the necessary repairs or adjustments and the test shall be repeated until satisfactory performance is obtained from the Contracting Officer. The tests shall demonstrate the following:

a. The capability of each fuel pump to deliver the indicated flow of fuel.

b. The alarm and control panels are operational and perform as designed.

c. Each fuel meter is operating accurately.

d. Vent piping is clear of debris and each pressure/vacuum relief vent is operating properly.

3.2.5 High Liquid Level Alarm Test

Each storage tank shall be initially overfilled with the appropriate product in order to verify the high liquid level alarms in the remote alarm panel function as designed. The initial overfill shall also verify that the storage tank overfill protection device functions as designed. Tank overfill shall stop immediately once the overfill device operates. The Contractor shall not overfill any storage more than 98 percent level even if the leak detection and liquid level electronic panel and the overfill device do not function as designed. Any problems with the electronic panel or the overfill device shall be corrected and retested. The system shall be drained below the high liquid levels following all tests.

3.3 FLUSHING, CLEANING AND ADJUSTING

Following installation and equipment testing but prior to system performance testing, the following flushing, cleaning, and adjustments

shall be performed.

3.3.1 Preparations for Flushing

3.3.1.1 Initial System Cleaning

The interior of each fuel storage tank shall be visually inspected and cleaned free of debris before filling. In the event of entry into a storage tank, the Contractor shall ensure a safe atmosphere exists. Contractor shall remove all preservatives and foreign matter from valves, line strainers, pumps, and other equipment coming in contact with fuel. No fuel will be delivered to the system until the Contractor has satisfactorily completed this initial system cleaning.

3.3.1.2 Protection of Equipment

Temporary 40 mesh cone type strainers shall be installed in the suction line ahead of each fueling pump as well as ahead of each filter/separator. The strainers shall be constructed of the same material as the piping and shall be compatible with the fuel to be handled. The temporary strainers shall remain in place for a minimum of 2 days after system startup, after which time the Contractor shall remove the strainers and prepare the piping as intended for final system operation.

3.3.2 System Flushing

3.3.2.1 Initial Fuel Supply

Following the preparations for flushing, each storage tank shall be filled to a 25 percent capacity with the proper fuel according to the fueling system's final operational requirements. Following the initial fuel supply, each storage tank's fuel temperature and liquid level shall be measured and recorded. The liquid level shall be measured using a manual tank gauge.

3.3.2.2 Disposal of Initial Fuel Supply

In the event the fuel contained in the piping system at the conclusion of the flushing operation is not considered by the Contracting Officer to be of satisfactory quality for the desired use, the Contractor shall be responsible for pumping out the entire fuel supply from the storage tanks and the piping system. The piping system shall be completely drained to the storage tank. Disposition of the fuel removed from the system shall be the responsibility of the Government.

3.3.3 Cleaning Equipment

Upon completion of flushing operations, permanent strainers shall be removed, cleaned, and reinstalled. If the pressure differential across the filter/separator elements exceeds that recommended by the manufacturer, the elements shall be replaced with the spare set furnished with the unit.

3.3.4 Initial System Adjustments

Following the flushing and cleaning operations, each system component shall be initially adjusted, if necessary, to meet the system's final operational requirements. The Government will deliver enough fuel to the storage tanks to enable the Contractor to make final adjustments to equipment and controls. Flow rates and pressures shall be adjusted as required to meet

the indicated requirements. The sequence of control for each component shall be adjusted to meet the indicated system requirements. Following the initial system adjustments, the equipment tests shall be performed in order to determine any necessary final system adjustments.

3.4 DEMONSTRATIONS

Contractor shall conduct a training course for the operating staff as designated by the Contracting Officer. The training period shall consist of a total of 4 hours of normal working time and shall start after the system is functionally completed but prior to final system acceptance. The field instructions shall cover all of the items contained in the operation and maintenance manuals as well as demonstrations of routine maintenance operations.

-- End of Section --

SECTION 14240

ELEVATORS, HYDRAULIC

PART 1 GENERAL

1.1 REFERENCES

The publications listed below form a part of this specification to the extent referenced. The publications are referred to in the text by basic designation only.

AMERICAN SOCIETY FOR TESTING AND MATERIALS (ASTM)

ASTM A 53	(1995a) Pipe, Steel, Black and Hot-Dipped, Zinc-Coated Welded and Seamless
ASTM A 106	(1994) Seamless Carbon Steel Pipe for High-Temperature Service
ASTM A 176	(1994) Stainless and Heat-Resisting Chromium Steel Plate, Sheet, and Strip
ASTM A 366	(1996) Steel, Sheet, Carbon, Cold-Rolled, Commercial Quality
ASTM A 568	(1993a) Steel, Sheet, Carbon, and High-Strength, Low-Alloy, Hot-Rolled and Cold-Rolled
ASTM A 569	(1996) Steel, Carbon (0.15 Maximum, Percent), Hot-Rolled Sheet and Strip Commercial Quality
ASTM D 92	(1996) Flash and Fire Points by Cleveland Open Cup
ASTM E 84	(1996a) Surface Burning Characteristics of Building Materials

AMERICAN SOCIETY OF MECHANICAL ENGINEERS (ASME)

ASME A17.1	(1993) Safety Code for Elevators and Escalators
ASME A17.2.2	(1994) Inspectors' Manual for Hydraulic Elevators
ASME B16.11	(1991) Forged Fittings, Socket-Welding and Threaded
ASME B31.1	(1995) Power Piping
ASME QEI-1	(1993; Addenda: QEI-1a-1995)Standard for the Qualification of Elevator Inspectors

CODE OF FEDERAL REGULATIONS (CFR)

36 CFR 1191	Americans with Disabilities Act (ADA) Accessibility Guidelines for Buildings and Facilities

FEDERAL STANDARDS (FED-STD)

FED-STD 795	(Basic) Uniform Federal Accessibility Standards

INTERNATIONAL CONFERENCE OF BUILDING OFFICIALS (ICBO)

ICBO-01	(1994) Uniform Building Code (3 Vol.)

NATIONAL ELECTRICAL MANUFACTURERS ASSOCIATION (NEMA)

NEMA MG 1	(1993; Rev 1; Rev 2) Motors and Generators

NATIONAL FIRE PROTECTION ASSOCIATION (NFPA)

NFPA 70	(1996) National Electrical Code
NFPA 252	(1995) Fire Tests of Door Assemblies

1.2 SUBMITTALS

Government approval is required for submittals with a "GA" designation. Submittals having an "FIO" designation are for information only. The following shall be submitted in accordance with Section 01330 SUBMITTAL PROCEDURES:

SD-01 Data

Training Data; FIO;AR.

Information describing the training course for operating personnel, training aids and samples of materials to be used, training schedules, and notification of training.

Elevator System; FIO;AR.

A complete list of equipment and material, including illustrations, schedules, manufacturer's descriptive data and technical literature, performance charts, catalog cuts, installation instructions, brochures, diagrams, and other information required for fabrication and installation of the equipment. Data shall include calculations for reaction loads imposed on building by elevator systems and to demonstrate that the proposed elevator system meets requirements for seismic loading of zone 1 in accordance with ICBO-01. Certified copies of list reports may be submitted in lieu of calculations. Calculations to demonstrate compliance with ASME A17.1, Rule XXIV shall be included. Spare parts data for each different item of material and equipment specified, after approval of detail drawings and not later than six (6) weeks prior to date of beneficial occupancy. Data shall include a complete list of parts and supplies, with current unit prices and source of supply, and a list of parts recommended to be replaced and replacement interval required. Data shall include appropriate sizing of electrical protective devices.

SD-04 Drawings

Elevator System; GA|ED.

Detail drawings including dimensioned layouts in plan and elevation showing the arrangement of elevator equipment, anchorage of equipment, clearances for maintenance and operation; and details on hoistway, doors and frames, operation and signal stations, controllers, motors, guide rails and brackets, cylinder and plunge unit, and points of interface with normal power fire alarm system HVAC or exhaust systems and interface with emergency power systems. Drawings shall show any revised building electrical system required to make supplied elevator system function as specified. Drawings shall contain complete wiring diagrams showing electrical connections and other details required to demonstrate sequence of operation and functions of system devices. Drawings shall include the appropriate sizing of electrical protective devices which are frequently different from National Electrical Code standard sizes.

SD-06 Instructions

Framed Instructions; GA|ED.

Diagrams, instructions, and other sheets proposed for posting.

SD-08 Statements

Qualification Certificates; FIO;AR.

Certificates of experience of elevator mechanics employed to install, supervise and test the elevator shall certify mechanics to have not less than 5 years experience installing, supervising and testing elevators of the type and rating specified. Certificate shall certify that elevator system installer is acceptable to elevator manufacturer prior to installation of elevators.

SD-09 Reports

Testing; FIO;AR.

Test reports in booklet form showing all field tests performed to adjust each component and all field tests performed to prove compliance with the specified performance criteria, upon completion and testing of installed system.

SD-14 Samples

Finishes; GA|ED.

Four samples each of materials and products requiring color or finish selection and approval. Samples shall be of actual materials proposed for use in construction.

SD-18 Records

Test Procedures; GA|ED

A plan detailing the testing procedures shall be submitted 60 days prior to performing the elevator tests.

SD-19 Operation and Maintenance Manuals

Elevator System; GA|ED.

Six copies of operation manual outlining the step-by-step procedures for system startup, operation and shutdown. Manuals shall include manufacturer's name, model number, service manual, parts list and brief description of all equipment, including basic operating features. Six copies of maintenance manual listing routine maintenance procedures, possible breakdowns and repairs, and troubleshooting guides. Manuals shall include equipment layout and complete wiring and control diagrams of the system as installed. Operation and maintenance manuals shall be approved prior to training course.

1.3 QUALIFICATIONS

Hydraulic elevators shall be pre-engineered elevator systems, and provided by a company regularly engaged in the manufacture of elevator systems. The manufacturer shall either install the elevator system or provide letter of endorsement certifying that the elevator-system installer is acceptable to the manufacturer.

1.4 REGULATORY REQUIREMENTS

Design and fabrication shall be in accordance with ASME A17.1. Each car shall have the capacity to lift a live load, exclusive of the car, at a speed as specified in the following schedule. The approximate travel, terminal floors, number of stops and openings, and the car sizes shall be as shown in the schedule. The elevators shall serve the floors with stops and openings in accordance with the requirements indicated. Elevators shall provide accessibility and usability for physically handicapped in accordance with the requirements for the handicapped in FED-STD 795 and 36 CFR 1191.

1.4.1 Elevator Schedule (Passenger)

Number of Elevators Required:	2
Service:	Passenger
Capacity:	1586 kg (3500 pounds)
Speed:	63 m/s (125 fpm) (full load up) 0.75 m/s (150 fpm downspeed)
Platform Size:	1880 wide by 2150 deep
Net Travel:	4200 mm
Landings:	2
Openings: Front	1070

Entrance Type:
Center-opening horizontal-SLiding

1.5 DESIGNATED LANDING

For the purposes of firefighter's service and emergency operations, as required by Section 211, ASME A17.1, the designated landing or level shall be the first floor. The alternate landing or level shall be the second floor.

1.6 DELIVERY AND STORAGE

All equipment delivered and placed in storage shall be stored with protection from the weather, excessive humidity and excessive temperature variations; and dirt, or other contaminants.

1.7 FIELD MEASUREMENTS

The Contractor shall become familiar with all details of the work, verify all dimensions in the field and advise the Contracting Officer of any discrepancy before performing any work.

1.8 WARRANTY

Warranty service shall be provided for each elevator for a period of 12 months after date of acceptance by Contracting Officer. Warranty service shall be performed only by trained elevator mechanics during regular working hours and shall include manufacturer's warranty requirements including but not limited to adjusting, lubricating and cleaning of equipment and furnishing supplies and parts to keep elevator in operation, except such parts made necessary by misuse, accident or negligence not caused by the Contractor. Testing and adjustments shall be in accordance with the applicable provisions of ASME A17.1 and ASME A17.2.2. Emergency callback service shall be included and available 24 hours a day, 7 days per week, with an initial telephone response time of 1 hour and a response time of 4 hours for a mechanic to the site. Inspection and service for fire service operation shall be performed every 6 months. Documentation of inspection and testing, and certification of successful operation shall be provided with each unit.

PART 2 PRODUCTS

2.1 GENERAL EQUIPMENT REQUIREMENTS

2.1.1 Standard Products

Material and equipment shall be the standard products of manufacturers regularly engaged in the fabrication of elevators and/or elevator parts, and shall essentially duplicate items which have been in satisfactory use for at least 2 years prior to bid opening. Equipment shall be supported by a service organization that is available 24 hours a day, 7 days per week, with a response time of 4 hours.

2.1.2 Nameplates

Each major item of equipment shall have the manufacturer's name, address, type or style, model or serial number, catalog number, and electrical and mechanical characteristics on a plate secured to the item of equipment.

2.1.3 Special Tools

One set of special tools, calibration devices, and instruments required for operation, calibration, and maintenance of the equipment shall be provided.

2.1.4 Electrical Work

Changes to the electrical distribution system required for coordination with elevator equipment shall be performed and coordinated by Contractor, at Contractor's expense. Electrical service for elevator machines shall be 480 volt, 60-Hertz, 3-phase, 4 wire solid neutral grounded alternating current. Electric service for elevator car lighting shall be 120-volt, single-phase, 60-Hertz grounded service. Electrical work shall conform to requirements in Section 16415 ELECTRICAL WORK, INTERIOR. A disconnect switch that will shut off power to the elevator car lighting shall be provided in the elevator machine room adjacent to the elevator control panel. A telephone junction box and an elevator car lighting junction box shall be provided adjacent to each controller. A single-phase electric circuit with grounded connection for video monitor shall be provided in machine room. Provide "Wye-Delta" closed transition, reduced voltage starter for elevator motor.

2.1.5 Use of Asbestos Products

Materials and products required for manufacturing and installing elevators shall not contain asbestos.

2.2 MISCELLANEOUS MATERIALS

2.2.1 Materials for Car Enclosures

Materials for car enclosures shall meet flame spread rating 0 to 75 and smoke development 0 to 450 as tested in accordance with requirements of ASTM E 84 as established by ASME A17.1, Rule 204.2.

2.2.2 Structural Steel

Structural steel shall be hot-rolled commercial quality carbon steel, pickled, oiled, complying with ASTM A 569 and ASTM A 568.

2.2.3 Cold-Rolled Sheet Steel

Sheet steel shall be cold-rolled commercial quality low carbon steel, Class 1, exposed matte finish, oiled, complying with ASTM A 366 and ASTM A 568.

2.2.4 Stainless Steel

Stainless steel shall be ASTM A 176 Type 302/304, austenitic, corrosion-resistant, with grain of belting in the direction of longest dimension. Surfaces shall be smooth and without waves and shall be in compliance with ASTM A 366.

2.3 PASSENGER ELEVATOR CAR

2.3.1 Car Fronts

Fronts for passenger elevators shall be combination door post and return panels manufactured of 1.9837 mm thick (14 gauge) provided with necessary cutouts for operating devices. Car operating panel shall be recessed into front return panel with surface-applied operating panel cover. Position indicator in front return shall be recessed with a surface-applied cover plate. Exposed brass shall be finished with No. 4 Satin Finish, unless otherwise specified.

2.3.2 Car Doors

Car doors for passenger elevators shall be constructed from 1.519 mm thick (16 gauge) sheet steel and brass cladding. Each door shall be sound-deadened and reinforced to receive required operating mechanism and hardware, and have two removable door guides per panel. Seams, screws or binding strips shall not be visible from within the car. Threshold shall be solid brass with grooves for door guides. Car and landing thresholds shall match in material and finish. Exposed steel shall be finished with rust-inhibitive primer and baked-enamel in a color to be selected, unless otherwise specified. Exposed brass shall be finished with No. 4 Satin Finish, unless otherwise specified. Car doors shall be equipped with a proximity-type infrared protective device having the following operation:

a. When doors are in full-open position, doors shall be unable to initiate closing if a person comes within detection zone. Detection zone moves with doors, so that if a passenger or object enters the zone after doors have begun to close, doors shall stop, then reverse to reopen. Doors shall reclose after a brief time. A passenger entering or leaving cars shall not cause doors to reopen unless doors reach a predetermined proximity to passenger.

b. After a stop is made, doors shall remain open for a time to permit passenger transfer, after which doors shall close automatically. This time interval shall be less for a car call than for a hall call or a coincident car/hall call.

c. If there is either a hall call anywhere in the group or a car call in the car in question and doors are prevented from closing for a fixed time period, door protective device shall be rendered inoperative, a buzzer shall sound in car and doors shall close at approximately half speed. Normal door operation shall resume at next landing reached by car.

2.3.3 Car Platform

Car platform for passenger elevators shall be fabricated from steel plates secured to a steel frame or plywood secured to a steel frame. Steel car platforms shall be assembled into a one-piece platform with top and bottom steel plates welded to structural steel frame and covered with felt and sound-isolation. Plywood car platform shall be 18 mm (3/4 inch) thick Exposure 1 plywood secured to underside of structural steel frame with metal fire protection secured to underside of structural steel frame.

2.3.4 Sling

Sling for passenger elevators shall be constructed of heavy steel stiles properly affixed to a steel crosshead and bolster with adequate bracing members to remove all strain from car enclosure. Steel bumpers shall be furnished for fastening sling to plunger.

2.3.5 Walls

Interior dimensions and components of passenger elevators shall be as shown on the drawings. Side and rear removable panels shall be applied to car walls and shall be manufactured from 13 mm Class 1 firerated solid polymer sheet, as specified in Section 06650 SOLID POLYMER FABRICATIONS, finished on front, back and edges, in patterns and colors as indicated. Panels shall be mounted on car walls in a manner permitting their

reversing. Panels shall be evenly spaced with not less than two panels on each side and three panels at rear with 9.5 mm (3/8 inch) separations backed up with brass finish dividers. Vent around base shall be concealed behind removable panels.

2.3.6 Car Top, Ceiling and Light Fixtures

Car top for passenger elevators shall be manufactured from 2.657 mm thick (12 gauge) sheet steel and shall be not less than 140 mm high with drop-ceiling and light fixtures. Ceiling shall be 3 mm (1/8 inch) thick translucent white plastic fire-retardant light diffuser supported by baked-enamel perimeter frame and dividers to form drop-ceiling light fixture. Light fixtures shall be as shown the drawings, manufactured of sheet steel with flange and enclosed sides and top, baked-enamel reflector, mounted directly to outlet box. Bottom of fixtures shall be flush with car ceiling. Light level shall average at least 108l x (10 footcandles) measured at the car threshold, with the door closed. A part of car light fixture shall be removable to permit use of the emergency exit panel in top of car.

2.3.7 Emergency Exit

Car top for passenger elevators shall be manufactured with a hinged emergency exit panel of 2.657 mm thick (12 gauge) steel which opens up to clear the crosshead and car door operator. Emergency exit panel shall be hinged on counterweight side and held in place with nonremovable fastening devices at each corner, and be openable from top of car only. A minimum of two sides of exit panel shall lap exit opening by 25 mm. Exits shall be equipped with electrical contacts which will prevent operation of car when the exit door is open and cause the alarm bell to ring.

2.3.8 Floor Finish

Floor finish for passenger elevators shall be carpet tile as specified in Section 09680 CARPET. Tile shall be laid flush with the solid brass platform thresholds and landing sills.

2.3.9 Base

Base for passenger elevators shall be brushed brass, 150 mm (6 inches) high.

2.3.10 Handrails

Brushed brass handrails for passenger elevators shall be as shown, mounted on side and rear walls and shall comply with ASME A17.1, FED-STD 795 and 36 CFR 1191. For elevators with two-speed horizontal-slide openings, handrails shall be turned back to wall.

2.3.11 Exhaust Fan

Exhaust fan for passenger elevators shall be two-speed exhaust type ventilating unit mounted above car ceiling and shall be provided with a stainless steel grille. Units shall be suitably isolated from car ceiling and shall provide at top speed of a minimum of 6 air changes per hour for car volume and car occupancy. Switches for the operation of the exhaust unit shall be located in car station locked cabinet or key-switched.

2.3.12 Communications

A telephone system in recessed cabinets shall be provided for passenger elevators. A vandal-resistant speaker type intercom with push-buttons to activate shall be installed in car station behind a stainless steel perforated grille and connected to a programmable auto-dialer located in machine room. Auto-dialer shall be provided with a solid-state charger unit which will automatically provide emergency power and an immediate transfer in the event of failure of normal power supply. The push-button located in car station or in separate cabinet shall be at the prescribed handicapped height and shall be identified as "EMERGENCY PHONE PUSH TO ACTIVATE". The entire communication assembly shall be approved for an elevator installation. The push button telephone shall comply with FED-STD 795 and 36 CFR 1191. The telephone communication shall not be terminated until one of the communicating parties hangs up the receiver or manually disconnects the communication link.

2.3.13 Car Emergency Lighting System

Emergency car lighting system for passenger elevators shall consist of an emergency power pack on top of the elevator and a remote lighting fixture inside elevator car located above car operating panel.

2.3.13.1 Power Pack

Power pack for emergency lighting system shall be a sealed lead-cadmium or nickel-cadmium 6-volt rechargeable batteries with solid-state controls and an integral regulating charger connected to normal power supply. Power pack unit shall contain the following:

a. Minimum 150 mm diameter alarm bell connected to the elevator alarm and emergency push-button.

b. Top of car light fixture with protective wire guard and ON-OFF switch.

c. Testing circuit and pilot light.

d. Low-wattage pilot light indicator.

e. Battery low-voltage disconnect.

2.3.13.2 Emergency Light Fixture

Emergency light fixture shall be located inside elevator car as part of the indicated fixture array mounted in the car ceiling and shall consist of a minimum of two lamps capable of providing a minimum level of illumination of 10.8 lx at a point 1220 mm (4 feet) above the floor, 300 mm (1 foot) in front of car station.

2.3.13.3 Remote Light Fixture

Upon interruption of normal power, remote light fixture for passenger elevators shall automatically and immediately illuminate and permit operation of alarm bell, subject to activation of emergency stop-switch or alarm button. Emergency power pack shall be capable of providing a minimum of 1 hour emergency bell operation and 4 hours of continuous illumination.

2.3.14 Protection Pads

Passenger Elevator Car No. 2: Car shall be provided with wall protection pads with inconspicuous stainless steel pad hooks spaced not over 460 mm apart near the ceiling. Pads shall be heavy-quality fire-retardant treated canvas with two layers of sewn cotton batting with metal eyelets for each pad hook. Pads shall cover entire wall surface except operating devices.

2.3.15 Certificate Frame

A brass certificate frame with translucent plexiglass lens of the appropriate size to receive certificate issued by inspecting agency shall be provided. Frame shall be engraved to show name of manufacturer, carrying capacity in kilograms (pounds) and maximum number of persons allowed.

2.3.16 Car Guide Shoes

Guide shoes for passenger elevators shall be the adjustable mounting type on each side of car. Shoes shall be rigidly secured in accurate alignment at top and bottom of car frame. Flexible type sliding guide shoes shall consist of a swivel-type shoe, assembled on a metal base with provisions for self-alignment. Each shoe shall be provided with renewable gibs. Car guide shoes shall be adjustable for side play between guide rails. Renewable wearing gibs shall be fabricated from a durable plastic compound material having a low coefficient of friction and long wearing qualities. Gibs shall be the type requiring minimum rail lubrication.

2.4 PASSENGER ELEVATOR HOISTWAY ENTRANCES

2.4.1 Hoistway Doors

Hoistway doors for passenger elevators shall be designed and fabricated as part of a Class B 1-1/2 Hour fire-rated door/frame assembly to meet requirements of NFPA 252 and shall bear the label of an approved testing laboratory. Doors for passenger elevators shall be hollow metal type with plain panel design not less than 32 mm (1-1/4 inches) thick with 1.519 mm thick (16 gauge) face sheet-steel panels, and brushed brass cladding, with 1.519 mm thick (16 gauge) sight guards to match door finish. Each door shall be reinforced with continuous vertical members and filled with sound-deadening material. Doors shall be reinforced to accept the required operating mechanism and hardware. Doors shall have two removable door guides per panel. Seams, binding strips or screws shall not be visible from the landing. Exposed steel shall be finished with rust-inhibitive primer and baked-enamel in a color to be selected, unless otherwise specified. Exposed brass shall be finished with No. 4 Satin Finish, unless otherwise specified.

2.4.2 Hoistway Frames

Hoistway frames for passenger elevators shall be designed and fabricated as part of a Class B 1-1/2 Hour fire-rated door/frame assembly to meet requirements of NFPA 252 and shall bear the label of an approved testing laboratory. Frames shall be formed 1.897 mm thick (14 gauge) sheet-steel with brushed brass cladding to match doors, with head and jamb in flush alignment and corners welded and ground smooth. Head and jamb section shall be bolted assembly with bolts, washer and locking nut or lock washer. Frame assembly shall be securely fastened to the structure. Frames shall return to the wall. Combination buck and jamb frames may be provided with knockdown back flanges to permit installation in concrete walls. Exposed steel shall be finished with rust-inhibitive primer and baked-enamel in a

color to be selected, unless otherwise specified.

2.4.3 Symbols

Raised stainless steel symbols as required by FED-STD 795 and 36 CFR 1191 of color selected, shall be provided at each floor to indicate the floor location. Symbols shall be attached with concealed fasteners. Symbols shall be placed in a location which can be seen by passenger from the opened passenger elevator doors.

2.4.4 Sills

Sills for passenger elevators shall be solid brass with machined grooves for door guides, secured to floor beams. Car thresholds and landing sills shall match in material and finish.

2.4.5 Strut Angles

Strut angles for passenger elevators shall be structural steel of size not less than 76 x 76 x 5 mm (3 x 3 x 3/16 inch) extending from sill to beam above and anchored to building structure with structural steel fastenings and bracings of structural members with a cross section of not less than strut angles.

2.4.6 Door Hangers and Housing

Each door panel shall be provided with not less than two sheave-type hangers designed for required door operation. Hanger housing and support shall be fabricated from formed Z-shaped steel angles of size not less than 5 mm (3/16 inch) thick bolted to strut angles.

2.4.7 Door Rollers

Door rollers shall be constructed with grease-packed ball-bearings and shall be tired with a sound-reducing material. Diameter of rollers shall not be less than 83 mm (3-1/4 inches) for car doors and not less than 57 mm (2-1/4 inches) for hoistway doors. Upward thrust shall be taken by a hardened and ground ball-bearing roller assembled on an eccentric stud to provide adjustment.

2.4.8 Hanger Track

Hanger track shall be of high carbon cold-drawn steel, round at top to receive door rollers, round at bottom to receive up-thrust rollers, of size engineered to accommodate load requirements.

2.4.9 Covers and Guards

Hanger covers, dust covers, toe guards and fascia plate shall be fabricated from 1.519 mm thick (16 gauge) reinforced steel and finished with baked-enamel. Hanger covers shall extend the full door travel and shall be mounted in sections for ease of servicing door hangers. Dust covers shall be provided over top terminal landing door only and shall be secured to hanger housing and building structure. Toe guards shall be secured to sill. Fascia plates shall be provided between each door hanger housing and sill.

2.5 PASSENGER ELEVATOR DOOR OPERATION

Car and hoistway doors for passenger elevators shall be operated simultaneously by an electric-power door operator. Doors shall operate smoothly in the opening direction and closing direction and be electrically or hydraulically cushioned to stop at both the full-open and full-closed position. Operators shall be high-speed heavy-duty type which will provide an average door-opening speed of 0.76 m/s (2-1/2 fps). Car and hoistway doors shall be opened and closed simultaneously. When on automatic operation door-closing force shall not exceed 130 N (30 pounds). Reversal of doors when closing shall be accomplished by the "DOOR OPEN" button, car door safety edge, or interruption of the photoelectric light beams. Doors shall be arranged so that doors can be opened manually in the event of power failure.

2.6 PASSENGER ELEVATOR OPERATING AND SIGNAL FIXTURES

2.6.1 General

Elevator fixtures and panels for passenger elevators shall be constructed of 3 mm (1/8 inch) thick faceplates of stainless steel at hall landings, and brass inside cars. Fastenings for all exposed fixtures shall be secured with tamper-proof spanner-head screws of same material and finish as fixture. Hall and car call-buttons shall be the call-register type with a low-voltage power supply not to exceed 48 volts. Pressure on a button shall illuminate button to indicate that a call in the desired direction has been registered. Car and hall fixtures shall be designed and located at the prescribed height to accommodate the handicapped in accordance with FED-STD 795 and 36 CFR 1191 for passenger elevators only. Handicapped markings shall be integral with faceplates in accordance with FED-STD 795 and 36 CFR 1191. Surface-applied markings are not acceptable. Engraving shall be black-filled except for fire-service identification which shall be red-filled. Operating and signal fixture contacts and lamps shall be completely enclosed in steel boxes finished with a baked-enamel. Boxes for hall landing devices shall be equipped for proper adjustment to wall. Lamps shall be installed in light-tight compartments. Cover-plates shall be provided with rubber gaskets when exposed to weather or harmful contaminants. Replacement bulbs shall be readily available from three sources.

2.6.2 Car Operating Panel

Car operating panel for passenger elevators shall be provided with the necessary raised (0.8 mm (0.03 inch)) markings for the handicapped, and shall include a series of minimum 20 mm (3/4 inch) diameter or square push-buttons numbered to correspond to the floor served and various additional switches, buttons and light jewels, including emergency stop, alarm button, "DOOR OPEN" button and communication speaker telephone. Operating buttons shall be of manufacturer's standard design.Buttons and switches not required for automatic or fire-service operation shall be key-operated and mounted on front-return car operating station. Elevator number and "NO SMOKING" shall be international symbol engraved on upper portion of car. Operating panel in car shall consist of a flush-mounted panel containing the following operating devices:

a. "DOOR OPEN" button.

b. "DOOR CLOSE" button.

c. Key-operated car fan/light switch.

d. Key-operated ventilating blower switch/call light.

e. Communication telephone.

f. Emergency stop-switch key-operated when operated will stop the car independently of normal stopping devices. Operation of emergency stop switch shall not cause any power variance or surge that may affect the operation or condition of the control panel or its components.

g. Emergency signal-switch connected to a 150 mm (6 inch) diameter signal bell outside of elevator hoistway at first floor located as shown or as directed.

h. Key-operated independent operation switch (for multi-car only).

i. Key-operated inspection switch which will render normal operation inoperative for the purpose of using the hoistway access switch.

j. Key-operated fire-service switch and light jewel.

2.6.3 Auxiliary Car Operating Panel

Auxiliary car operating panel for passenger elevators shall be similar in design to main car panel, and shall include all devices necessary for automatic operation such as emergency stop switch, alarm bell, "DOOR OPEN" button.

2.6.4 Hall-Call Station

Hall-call operating devices for passenger elevators at landing shall consist of an "UP" push-button at bottom landing, a "DOWN" push-button at top landing, and "UP" and "DOWN" push-buttons at all other landings. Buttons shall be manufacturer's standard design.

2.6.4.1 Commandeering Switch

Key-operated commandeering switch for passenger elevators shall be provided at designated landing and located in landing call-button cover plate. Switch shall be momentary pressure type with the key removable only in "Off" position and shall be keyed to match the independent operation switch specified for car operating devices.

2.6.4.2 Fire-Service Switch

Fire-service switch for passenger elevators shall be located at the designated landing.

2.6.5 Direction Lanterns

Lanterns for passenger elevators shall be in accordance with FED-STD 795 and 36 CFR 1191 and shall be provided at all floor landings and in each car entrance column. Lanterns shall be the manufacturer's standard design. Lanterns shall signal the approach of a stopping car when car is a predetermined distance from landing.

2.6.6 In-Car Car-Position Indicator

Indicator numerals, directional arrows and faceplates for passenger

elevators shall be manufacturer's standard design. As car travels through hoistway the car position shall be indicated by illumination of light jewel corresponding to landing at which the car is stopped or passing. Necessary light baffles shall be provided. Floor numerals and letters shall illuminate white. A position indicator of the digital-readout or dot-matrix type (minimum 50 mm (2 inch) high indication) shall be provided in car transom panel. Number corresponding to car position shall remain illuminated when motor drive is shut down. Illumination shall be shrouded in an approved manner to protect against glare from car lighting.

2.6.7 Audible Signals

An audible signal shall be provided at each floor landing and in each car and shall sound coincident with the lantern illumination indicators. The audible signal shall be no less than 20 decibels with a frequency no higher than 1500 Hz. The audible signal shall sound once for UP direction and twice for DOWN direction.

2.6.8 Combination Hall-Position Indicator and Directional Arrows

Combination hall-position indicator and directional arrows for passenger elevators shall be provided at first and second floors landing directly above entrance frame. As elevator travels in hoistway, elevator position shall be indicated by illumination in alpha-numeric characters corresponding to the landing where elevator is stopped or passing. Number corresponding to position of car shall remain illuminated when motor is shut down. An audible signal shall sound in elevator car to indicate that the elevator is stopping or passing a floor served by elevator. Fixture design and operation shall be similar in design to that specified for Car Position Indicator.

2.7 PASSENGER CAR OPERATION (DUPLEX SELECTIVE/COLLECTIVE)

Passenger Elevator Nos. 1 and 2: Cars shall be arranged so that when all calls have been answered, 1 car will park at main entrance floor, the other car will remain at last floor served. A car at first floor or traveling UP shall continue UP until all UP landing calls are answered provided the landing buttons are pressed in time to make the stop and shall answer all DOWN landing calls behind the other car traveling DOWN. A car at the top floor traveling DOWN shall continue DOWN until all DOWN landing calls are answered provided the landing buttons are pressed in time to make the stop and shall answer all UP landing calls behind other car traveling UP. When both cars are in operation, landing calls shall be answered by the car nearest the call and set in the direction of call. Only one car shall answer any one landing call. Operation of each car shall be such that the momentary pressing of one or more car buttons shall close the car doors in an adjustable, predetermined time after buttons are pressed and start the car. Cars shall stop at all landings for which car or landing buttons have been pressed in the order in which landings are reached, irrespective of the sequence in which buttons have been pressed. If one car is out of service or fails to start, the other car shall automatically answer all calls. When cars are parked at home landing with doors closed, pressing a hall button at those floors shall illuminate lights and shall open the car doors.

2.8 AUTOMATIC EMERGENCY POWER OPERATION

Elevator control system shall be arranged to operate on emergency power supply upon failure of the normal power supply. Elevators operating on

dedicated service, such as fire service, will not be required to return to designated landing when emergency power becomes available for respective elevator. Elevators shall operate as follows:

a. When normal power supply fails, all cars shall shut down.

b. One car shall automatically start and travel at full-rated speed to designated landing, stop, open the car and hoistway doors, then shut down.

c. After first car shuts down, other cars in the group shall individually operate as described above.

d. After all cars have moved to first floor, a preselected car shall operate at rated speed to serve car and landing calls. Automatic selection can be overridden manually. Emergency power selector buttons and light jewels shall be provided in a faceplate at the designated landing. Emergency power selector buttons shall be operable after automatic return has been completed, and shall permit the selection of a maximum of 1 elevator at a time.

2.9 AUTOMATIC ELEVATOR OPERATION

2.9.1 General

The operating device shall consist of a series of push-buttons in the car numbered to correspond to landings, "UP" and "DOWN" buttons at intermediate landings and a single button at terminal landing. To meet the elevator operation requirements specified in this section all buttons shall be connected electrically to the control system which governs the floor selection, car selection, direction of travel and governs the acceleration and retardation.

2.9.2 Operation

Car calls shall be registered within the car by pressing the button corresponding to the designated floors. Hall calls shall be registered by pressing buttons in the corridor push-button fixture. Once the demand for elevator service has been established and the car has received a start signal the car operation shall be as follows.

2.9.2.1 Door Closing

Doors shall close automatically. When doors are fully closed and the interlock circuit established, the car shall start to move in the direction established by control system. Car shall accelerate and decelerate automatically and stop at first floor for which a car button has been registered or at first floor for a corridor demand which has been assigned to car. Car shall stop at all floors for which car calls are registered in the order in which the floors are reached and shall stop for any corridor demands assigned to the cars in the order in which the floors are reached.

2.9.2.2 Door Opening

Doors shall open automatically as car reaches the landing. After a predetermined time the doors shall close and the car shall proceed to answer the remaining car or assigned corridor calls. A protective device such as a safety edge and light beam device shall be provided on car door and when activated will prevent closing of doors. Cars shall become

available for assignment at whatever floor the last car demand has been satisfied in the direction in which the car is traveling.

2.9.2.3 Car Dispatch

When car does not receive a demand dispatch at dispatching floor for an adjustable time period up to 10 minutes set initially at 5 minutes, the motor drive unit shall be switched-off. If the car's switched-off motor drive unit receives a demand dispatch the motor drive unit shall automatically restart.

2.9.2.4 Door Dwell-Time

Door open dwell-times shall be adjustable so that the open time for a car call is shorter than the open time for corridor calls and second passengers. If a longer time is needed for passenger entry, doors can be prevented from closing or reversing by the light beam door control, the protective leading edge on car door, or by pressing "DOOR OPEN" button in car. Door dwell-times shall comply with FED-STD 795 and 36 CFR 1191.

2.9.3 Independent Service

Elevators shall be arranged for independent service operation with a key-switch located in the locked section of car operating panel. When the car key-switch is placed in the "ON" position the key-switch shall remove car from corridor button operation to permit operation from car buttons only. Elevator direction lanterns shall be inoperative when elevator is in this mode of operation.

2.9.4 Automatic Power Shutdown

Elevator control system shall cause automatic power shutdown of the elevators in the event that a heat detector located in the elevator machine room or in the elevator hoistway activates. Heat detector shall be provided under Section 16721 FIRE DETECTION AND ALARM SYSTEM. Activation of a heat detector in the elevator machine room or in the hoistway, shall cause power to the elevators to be automatically shut down by operating the shunt-trip breaker(s) in the main line power supply.

2.10 SENSOR AND CONTROL WIRE SURGE PROTECTION

Digital and analog inputs shall be protected against surges induced on control and sensor wiring. Digital and analog outputs shall be protected as shown against surges induced on control and sensor wiring installed outdoors. Fuses shall not be used for surge protection. The inputs and outputs shall be tested in both normal mode and common mode using the following waveforms:

a. A 10 microsecond rise time by 1000 microsecond pulse width waveform with a peak voltage of 1500 volts and a peak current of 60 amperes.

b. An eight microsecond rise time by 20 microsecond pulse width waveform with a peak voltage of 1000 volts and a peak current of 500 amperes.

2.11 COMMUNICATIONS LINKS SURGE PROTECTION

Communications equipment shall be protected against surges induced on any

communications link. Cables and conductors, except fiber optics, which serve as communications links from Motor Control Room (MCR) to field equipment, and between field equipments shall have surge protection circuits installed at each end. Protection shall be furnished at equipment and additional triple electrode gas surge protectors rated for the application on each wireline circuit shall be installed within 1 m of the building cable entrance. Fuses shall not be used for surge protection. The inputs and outputs shall be tested in both normal mode and common mode using the following two waveforms:

a. A 10 microsecond rise time by 1000 microsecond pulse width waveform with a peak voltage of 1500 volts and a peak current of 60 amperes.

b. An eight microsecond rise time by 20 microsecond pulse width waveform with a peak voltage of 1000 volts and a peak current of 500 amperes.

2.12 COMMUNICATIONS LINKS OVER VOLTAGE PROTECTION

Communications equipment such as MODEMs, line drivers, and repeaters shall be protected against overvoltage on any communications link conductors. Cables and conductors, which serve as communications links, except fiber optics, shall have overvoltage protection for voltages up to 480 Vac rms, 60 Hz installed. Instrument fuses or fusible resistors are required for this application.

2.13 FIREFIGHTERS SERVICE

Firefighter service shall be in accordance with ASME A17.1 for automatic elevators. Smoke detectors shall be powered from the building fire alarm control panel. Elevator lobby and machine room smoke detectors shall be in accordance with Section 16721 FIRE DETECTION AND ALARM SYSTEM.

2.14 ELEVATOR POWER UNIT

2.14.1 Pumping and Control Mechanism

Hydraulic fluid shall be provided in the reservoir, pump and control valve. Hydraulic fluid shall have a minimum fire point of 190 degrees C (375 degrees F) as established by ASTM D 92. If oil temperature drops below pre-set minimum, elevator shall be dispatched automatically to lowest terminal floor at which point the pump will bypass oil in system without car motion until pre-set temperature is reached. Normal response to passenger demand shall not be affected by this control. Resistance type heating elements do not meet the intent of this specification.

2.14.1.1 Oil Temperature Device

An oil temperature device shall be provided that will maintain oil temperature between 21 degrees C (70 degrees F) and 38 degrees C (100 degrees F) regardless of ambient temperatures.

2.14.1.2 Pump

Pump shall be a rotary-positive displacement type for oil-hydraulic elevator service designed for steady discharge with minimum pulsation to give smooth and quiet operation, with an output which will not vary more than 10 percent between no-load and full-load on the elevator. Operating

pressure shall not exceed 2760 kPa (400 psi).

2.14.1.3 Piping

Piping shall be ASTM A 53 Grade E or S, ASTM A 106 Grade B, or grooved piping system of minimum schedule 40 seamless steel conforming to ASME A17.1 and ASME B16.11. Pipes shall conform to the cleanliness requirements of ASME B31.1.

2.14.1.4 Motor

Motor shall be especially designed for oil-hydraulic elevator service and shall be of standard manufacture duty rating and provided with specified speeds and loads.

2.14.1.5 Oil-Control Unit

Oil-control unit shall contain the following valve assemblies:

a. Automatic shut-off valve shall be provided in the oil-supply line as close to the cylinder inlet as possible. When there is a 10 percent drop in NO-LOAD operating pressure, the automatic shut-off valve shall be activated. When activated, the device shall immediately stop the descent of elevator and hold the elevator until it is lowered by use of the maximum lowering feature of the valve. Manual lowering feature of automatic shut-off valve shall be arranged to limit the maximum descending speed of elevator to 0.08 m/s (15 feet per minute). Exposed adjustments of automatic shut-off shall have the means of adjustment sealed after being set to the correct position.

b. Relief-valve for hydraulic shall be externally adjustable and shall bypass the total oil flow without increasing back pressure by more than 56 percent above working pressure.

c. Safety check-valve shall close quietly without permitting any perceptible reverse flow and shall be designed to support the elevator on a positively locked column of oil when car is at rest.

d. Up-start and stop valve shall be externally adjustable and shall bypass oil flow during the start-and-stop of motor-pump assembly. Valve shall close slowly, gradually diverting oil to the jack unit to insure smooth up-start and up-step.

e. Lowering and leveling valve shall be externally adjustable for drop-away speed, lowering speed, leveling speed and stopping speed to insure smooth down-starts and stops. Leveling valve shall be designed to level the car to floor in the direction the car is traveling when slowdown is initiated.

f. Manual lowering valve shall be capable of lowering the elevator car in event of power failure. Manual-lowering valve shall be arranged to limit the maximum descending speed under manual operation to 0.08 m/s (15 fpm).

g. A service check-valve shall be installed in oil supply line between power unit and jack.

2.14.1.6 Storage Tank

Storage tank shall be single-wall construction of steel with a steel cover. Manufacturer's recommendation for the type of oil to be used shall be included in written instructions for the care, adjustment and maintenance of equipment.

2.14.1.7 Controller

Electric controller shall be of the microprocessor based logic type with battery backup provided with reduced voltage starting. Components required for proper elevator performance shall be neatly mounted and wired and completely enclosed in a cabinet with a mechanically-latched door. Control cabinet shall be designed for mounting on power unit, wall or floor stand. Electric control apparatus shall be completely isolated from oil reservoir. A feature shall be incorporated in electrical control circuit which will cause elevator car to descent automatically to the lowest terminal landing, if the system runs low on oil during ascending of the car. If power-operated doors are used, the car and hoistway doors shall automatically open when car reaches landing to allow passengers to exit. Parked car shall have doors in closed position and all control buttons shall be made inoperative.

2.14.2 Sound Reduction

Sound-insulating panels shall isolate airborne noise from motor pump assembly. Openings shall be provided to adequately ventilate the power unit motor. A minimum of two sound-isolating couplings shall be installed in oil line in machine room between pump and jack. Couplings shall be designed and manufactured to be blowout proof. Oil-hydraulic silencer shall be installed in oil line near power unit and shall contain pulsation absorbing material surrounded by a blowout-proof housing. Power unit assembly shall be mounted on vibration pads to isolate the unit from building structure.

2.15 LEVELING DEVICE

Elevators shall be equipped with a 2-way leveling device to automatically bring the car to floor landings. Car shall automatically re-level at each landing to correct the overtravel and undertravel, and maintain the level regardless of load on car. Electric stopping system shall be arranged so that the car will stop level with the floor before brake is set. Stopping accuracy shall not exceed a plus or minus 6 mm.

2.16 JACK UNIT

Jack unit shall be designed and constructed of sufficient size to lift the gross load to the height specified and shall be free from oil leakage. Brittle material such as grey cast iron shall not be used in jack construction. Jack unit shall consist of the following:

a. Plunger fabricated of heavy seamless steel tubing accurately turned and polished.

b. Stop-ring welded or screwed to the plunger to positively prevent plunger from leaving the cylinder.

c. Internal guide bearing.

d. Packing or seal.

e. Drip ring around cylinder top.

f. Outer cylinder made of steel tubing.

g. Air bleeder.

h. Brackets welded to jack cylinder for supporting the elevator on pit channels.

i. Scavenger pump with copper tubing connected to the tank.

2.17 ELEVATOR SUPPORTS

Structural steel beams, inserts, brackets, bolts and fastening devices shall be provided for proper installation of elevator equipment. Wood plugs are not acceptable.

2.18 BUFFERS

Buffers shall be of design suitable for depth of pit. Buffer anchorage at pit floors shall be provided for each car and counterweight and arranged to avoid puncturing the pit waterproofing. Type of buffer used shall be tested and approved for compliance with elevator service requirements before installation. Pipe struts and steadiers shall be provided as required for pit conditions. A metal plate with information concerning stroke and load-rating shall be permanently fastened to each buffer. Pit-mounted buffers shall have an adequate stroke designed to bring the fully-loaded car and counterweight to rest from governor tripping speed at an average rate of retardation not exceeding gravity. Moving portion of buffer shall be designed to be accelerated by the car without noticeable peak retardation. Spring buffers shall be in accordance with ASME A17.1.

2.19 LUBRICATION POINTS

Every part subject to movement friction shall be provided with provisions for oil or grease lubrication. All points of lubrication shall be readily accessible.

2.20 SEISMIC REQUIREMENTS

Seismic protection shall be provided to conform to ASME A17.1, Rule XXIV.

PART 3 EXECUTION

3.1 INSTALLATION

Elevators and equipment shall be installed in accordance with ASME A17.1 and manufacturer's recommendation. Guide rails shall be set plumb and parallel and attached to guide rail brackets secured to building structure at intervals required by the elevator manufacturer. Contractor shall provide additional framing as required for the guide rails. Steel shim plates shall be used for aligning equipment. Guide rail sections shall be joined together in accordance with ASME A17.1. Guide rails shall be thoroughly cleaned and made smooth before elevator is put into operation. During installation all stainless steel shall be protected.

3.2 FIELD WELDING

When structural or load-bearing members are to be field welded, welding and qualification of welders shall be as specified in Section 05055WELDING, STRUCTURAL.

3.3 CASING, CYLINDER AND PLUNGER UNIT

A steel casing minimum 200 mm larger in diameter than the cylinder sealed at bottom with steel plate or concrete plug shall be complete with provisions to accommodate the cylinder. Casing shall be accurately positioned, plumbed and set to accept the cylinder. The cylinder shall be protected from corrosion by totally enclosing the cylinder with a separate schedule 80, polyvinyl chloride jacket or with a high density, fused polyethylene coating, recommended by the manufacturer. Area between casing and cylinder wall shall be filled with washed dry sand after cylinder has been accurately located. Top of casing shall be sealed. The work of boring the well and setting the cylinder shall be coordinated with construction of concrete pit.

3.4 ELEVATOR WIRING

Wiring shall be provided for electrically-operated items of elevator equipment to comply with requirements of NFPA 70 and Section 16415 ELECTRICAL WORK, INTERIOR. For control and signal circuits wire shall be minimum No. 16 AWG. For power and lighting circuits wire shall be minimum No. 12 AWG. Work light fixtures equipped with 150 watt incandescent lamps and ground duplex receptacles shall be provided at top and bottom of car. Work light fixtures and traveling cable junction boxes shall be located to provide illumination at junction boxes. Wiring shall terminate in junction boxes. Wires shall be identified and shall match symbols shown on wiring diagrams. Control and signal wires shall be brought to accessible numbered terminal blocks on the controller. Intra-panel wiring shall be flame-resistant type.

3.4.1 Traveling Cables

Cables shall terminate at numbered terminal blocks in car and machine room. Traveling cable shall be provided with a separate shielded circuit for communication system and hang to obtain proper size of loop. Traveling cable shall be provided with 10 percent spare conductors for each car.

3.5 PAINTING

Except for factory-finished items and corrosion-resistant items, machined surfaces shall be painted as specified in Section 09900 PAINTING, GENERAL.

3.6 TESTING

Testing shall be in accordance with requirements of ASME A17.1 and ASME A17.2.2 and as specified below. The Contractor shall conduct a complete test of the system. After the system has passed all tests, the Contractor shall notify the Contracting Officer in writing, 10 days prior to the time of performing the acceptance test, that the system is complete and is ready for final acceptance testing. The Contractor after receiving written approval from the Contracting Officer will conduct a complete acceptance test of the system. Final testing will be witnessed by a certified government elevator inspector, or with approval of the Contracting Officer. The Contractor shall provide the services of an elevator inspector, employed by an independent testing company to inspect the elevators and witness the final testing and certify the elevators. The inspector shall

meet all qualification requirements of ASME QEI-1 and shall be certified in accordance with ASME QEI-1. The Contractor shall provide an elevator certificate signed by the inspector for each elevator. The certificate shall be provided to the Contracting Officer within 30 day after the completion of all testing.

3.6.1 Testing Period

Each elevator shall be tested with the specified rated-load in car continuously for a period of 35 percent of the duty time. During the test run the car shall be stopped at all floors in both directions of travel for a standing period of 10 seconds per floor. A manual test of the final limits (UP and DOWN overtravel) shall also be performed.

3.6.2 Speed Load Testing

The actual speed of elevator car in both directions of travel shall be determined with the rated-load and with no-load in the elevator car. Actual measured speed of car with the rated-load in the UP direction shall be within 5 percent of rated speed. The maximum difference in actual measured speeds obtained under the various conditions outlined shall not exceed 10 percent of the total difference between the UP and DOWN speeds.

3.6.3 Car Leveling Testing

Elevator car-leveling devices shall be tested for accuracy of landing at all floors with no-load in car, with symmetrical load in car and with the rated-load in car in both directions of travel.

3.6.4 Temperature Rise Testing

Temperature rise of hydraulic pump motor, motor drive, exciter and booster shall be conducted during the full-load test run for minimum one hour. Under these conditions, temperature rise of equipment shall not exceed the requirements established in NEMA MG 1 Chapter 12. Test shall be started when all parts of equipment are within the temperature required by NEMA at time of starting tests.

3.6.5 Insulation-Resistance Testing

Insulation-resistance testing shall be performed to ensure that the complete elevator wiring systems will be free from short circuits and grounds. Electrical conductors shall have an insulation-resistance of not less than 1 megohm between each conductor and ground, and not less than 1 megohm between each conductor and all other conductors. Prior to testing, provisions shall be made to prevent damage to electronic devices.

3.7 FRAMED INSTRUCTIONS

Two sets of instructions shall be typed and framed under glass or in laminated plastic, and posted side-by-side in the elevator room where directed before acceptance of elevator systems. First set of instructions shall include wiring and control diagrams showing the complete layout of elevator system. Second set of instructions shall include the condensed operating instructions describing preventive maintenance procedures, the methods for checking the elevator system for normal safe operation, and the procedures for safely starting and stopping the elevator system.

3.8 OPERATOR TRAINING

Contractor shall conduct a formal training course for operating Government personnel which shall include care, lubrication, adjustment and maintenance of elevator equipment. Training period shall consist of a total of 2 hours of normal working time and shall start after the system is functionally completed but prior to final acceptance tests. Field instructions shall cover all of the items contained in the operating and maintenance instructions, including demonstrations of routine maintenance operations. Contracting Officer shall be notified at least 14 days prior to date of starting the training course.

-- End of Section --

SECTION 15052

WELDING PRESSURE PIPING

PART 1 GENERAL

1.1 REFERENCES

The publications listed below form a part of this specification to the extent referenced. The publications are referred to in the text by basic designation only.

AMERICAN SOCIETY FOR NONDESTRUCTIVE TESTING (ASNT)

ASNT-2050	(1992; Supple) Recommended Practice SNT-TC-1A

AMERICAN SOCIETY OF MECHANICAL ENGINEERS (ASME)

ASME B31.8	(1992; B31.8a; B31.8b; B31.8c) Gas Transmission and Distribution Piping Systems
ASME BPV II Pt C	(1995; Addenda Dec 1995) Boiler and Pressure Vessel Code; Section II, Materials, Part C - Specifications for Welding Rods, Electrodes and Filler Metals
ASME BPV IX	(1995; Addenda Dec 1995) Boiler and Pressure Vessel Code; Section IX, Welding and Brazing Qualifications

AMERICAN WELDING SOCIETY (AWS)

AWS A2.4	(1993) Standard Symbols for Welding, Brazing and Nondestructive Examination
AWS A3.0	(1994) Standard Welding Terms and Definitions
AWS D10.9	(1980) Qualification of Welding Procedures and Welders for Piping and Tubing
AWS QC1	(1988) Standard for AWS Certification of Welding Inspectors
AWS Z49.1	(1994) Safety in Welding and Cutting

1.2 DEFINITIONS

Definitions shall be in accordance with AWS A3.0.

1.3 GENERAL REQUIREMENTS

This section covers the welding of pressure piping systems. Deviations from applicable codes, approved procedures, and approved detail drawings

will not be permitted without prior written approval. Materials or components with welds made off the site will not be accepted if the welding does not conform to the requirements of this specification, unless otherwise specified. Procedures shall be developed by the Contractor for welding all metals included in the work. Welding shall not be started until welding procedures, welders, and welding operators have been qualified. Qualification testing shall be performed by an approved testing laboratory, or by the Contractor if approved by the Contracting Officer. Costs of such testing shall be borne by the Contractor. The Contracting Officer shall be notified at least 24 hours in advance of the time and place of the tests. When practicable, the qualification tests shall be performed at or near the worksite. The Contractor shall maintain current records of the test results obtained in the welding procedure, welding operator, welder performance qualifications, and nondestructive examination (NDE) procedures readily available at the site for examination by the Contracting Officer. The procedures for making transition welds between different materials or between plates or pipes of different wall thicknesses shall be qualified. ASME B31.8 requirements for branch connections may be used in lieu of detailed designs. Unless otherwise specified, the choice of welding process shall be the responsibility of the Contractor.

1.4 Performance

The Contractor shall be responsible for the quality of all joint preparation, welding, and examination. All materials used in the welding operations shall be clearly identified and recorded. The inspection and testing defined in this specification are minimum requirements. Additional inspection and testing shall be the responsibility of the Contractor when he deems it necessary to achieve the quality required.

1.5 SUBMITTALS

Government approval is required for submittals with a "GA" designation; submittals having an "FIO" designation are for information only. The following shall be submitted in accordance with Section 01330 SUBMITTAL PROCEDURES:

SD-01 Data

Qualifications; FIO;AR.

Welding procedure qualification.

SD-04 Drawings

Pressure Piping; GA|ED.

Detail drawings showing location, length, and type of welds; and indicating postweld heat treatment and NDE as required.

SD-13 Certificates

Qualifications; FIO;AR.

Welder and welding operator performance qualification certificates. Welding inspectors and NDE personnel certificates. Qualifications of testing laboratory or the Contractor's quality assurance organization.

SD-18 Records

Welding Operations; FIO;AR.

Detailed procedures which define methods of compliance to contract drawings and specifications. Inspection and material procurement records. System and material testing and certification records. Written records and drawings indicating location of welds made by each welder or welding operator.

1.6 QUALIFICATIONS

Welding procedures, welders, and welding operators previously qualified by test may be accepted for the work without requalification, provided that all of the following conditions are fulfilled:

a. Copies of the welding procedures, the procedure qualification test records, and the welder and welding operator performance qualification test records are submitted and approved in accordance with paragraph SUBMITTALS.

b. Testing was performed by an approved testing laboratory or technical consultant or by the Contractor's approved quality assurance organization.

c. The welding procedures, welders, and welding operators were qualified in accordance with ASME BPV IX, or AWS D10.9, AR-2 level; and base materials, filler materials, electrodes, equipment, and processes conformed to the applicable requirements of this specification.

d. The requirements of paragraph "Renewal of Qualification" below are met and records showing name of employer and period of employment using the process for which qualified are submitted as evidence of conformance.

1.6.1 Welding Procedures Qualification

The Contractor shall record in detail and shall qualify the Welding Procedure Specifications for every welding procedure that he proposes. Qualification for each welding procedure shall conform to the requirements of ASME B31.8, and to this specification. The welding procedures shall specify end preparation for butt welds including cleaning, alignment, and root openings. Preheat, interpass temperature control, and postheat treatment of welds shall be as required by approved welding procedures, unless otherwise indicated or specified. The type of backing rings or consumable inserts, if used, shall be described and if they are to be removed, the removal process shall be described. Copies of the welding procedure specifications and procedure qualification test results for each type of welding required shall be submitted in accordance with paragraph SUBMITTALS. Approval of any procedure does not relieve the Contractor of the sole responsibility for producing acceptable welds. Welding procedures shall be identified individually and shall be referenced on the detail drawings or keyed to the contract drawings.

1.6.2 Welder and Welding Operator Performance

Each welder and welding operator assigned to work shall be qualified in accordance with ASME B31.8.

1.6.2.1 Certification

Before assigning welders or welding operators to the work, the Contractor shall provide the Contracting Officer with their names together with certification that each individual is performance-qualified as specified. The certification shall state the type of welding and positions for which each is qualified, the code and procedure under which each is qualified, date qualified, and the firm and individual certifying the qualification tests.

1.6.2.2 Identification

Each welder or welding operator shall be assigned an identifying number, letter, or symbol that shall be used to identify all of his welds. To identify welds, written records indicating the location of welds made by each welder or welding operator shall be submitted, and each welder or welding operator shall apply his mark adjacent to his welds using a rubber stamp or felt-tipped marker with permanent, weatherproof ink or other methods approved by the Contracting Officer that do not deform the metal. For seam welds, identification marks shall be placed adjacent to the welds at 1 m intervals. Identification by die stamps or electric etchers will not be allowed.

1.6.2.3 Renewal of Qualification

Requalification of a welder or welding operator shall be required under any of the following conditions:

a. When a welder or welding operator has not used the specific welding process for a period of 3 months; the period may be extended to 6 months if he has been employed on some other welding process.

b. When a welder or welding operator has not welded with any process during a period of 3 months, all his qualifications shall be expired, including any extended by virtue of a., above.

c. There is specific reason to question his ability to make welds that will meet the requirements of the specifications.

d. The welder or welding operator was qualified by an employer other than those firms performing work under this contract and a qualification test has not been taken within the preceding 12 months.

e. Renewal of qualification for a specific welding process under conditions a., b., and d., above, need be made on only a single test joint or pipe of any thickness, position, or material to reestablish the welder's or welding operator's qualification for any thickness, position, or material for which he had previously qualified.

1.6.3 Inspection and NDE Personnel

All inspection and NDE personnel shall be qualified in accordance with the following requirements.

1.6.3.1 Inspector Certification

Welding inspectors shall be qualified in accordance with AWS QC1.

1.6.3.2 NDE Personnel

NDE personnel shall be certified, and a written procedure for the control and administration of NDE personnel training, examination, and certification shall be established. The procedures shall be based on appropriate specific and general guidelines of training and experience recommended by ASNT-2050.

1.7 DELIVERY, STORAGE, AND HANDLING

All filler metals, electrodes, fluxes, and other welding materials shall be delivered to the site in manufacturers' original packages and stored in a dry space until used. Packages shall be properly labeled and designed to give maximum protection from moisture and to insure safe handling.

1.7.1 Material Control

Materials shall be stored in a controlled access and clean, dry area that is weathertight and is maintained at a temperature recommended by the manufacturer. The materials shall not be in contact with the floor and shall be stored on wooden pallets or cribbing.

1.7.1.1 Damaged Containers

Low-hydrogen steel electrodes shall be stored in their sealed shipping container. If the seal is damaged during shipment or storage, and the damage is not immediately detected, the covered electrodes in that container shall be rebaked in accordance with the manufacturer's instructions prior to issuance or shall be discarded. If a container is damaged in storage and the damage is witnessed, the electrodes from that container shall be immediately placed in a storage oven. The storage oven temperature shall be as recommended by the manufacturer or the welding material specification.

1.7.1.2 Partial Issues

When a container of covered electrodes is opened and only a portion of the content is issued, the remaining portion shall, within 1/2 hour, be placed in a storage oven.

1.7.2 Damaged Materials

Materials which are damaged shall be discarded. Covered electrodes which are oil or water-soaked, dirty, or on which the flux has separated from the wire shall be discarded.

1.8 SYMBOLS

Symbols shall be in accordance with AWS A2.4.

1.9 SAFETY

Safety precautions shall conform to AWS Z49.1.

PART 2 PRODUCTS

2.1 WELDING MATERIALS

Welding materials shall comply with ASME BPV II Pt C. Welding equipment, electrodes, welding wire, and fluxes shall be capable of producing satisfactory welds when used by a qualified welder or welding operator using qualified welding procedures.

PART 3 EXECUTION

3.1 WELDING OPERATIONS

Welding shall be performed in accordance with qualified procedures using qualified welders and welding operators. Welding shall not be done when the quality of the completed weld could be impaired by the prevailing working or weather conditions. The Contracting Officer shall determine when weather or working conditions are unsuitable for welding. Welding of hangers, supports, and plates to structural members shall conform to Section 05055 WELDING, STRUCTURAL.

3.1.1 Base Metal Preparation

Oxy-fuel cutting shall not be used on austenitic stainless steel or nonferrous materials.

3.1.2 Weld Joint Fit-Up

Parts that are to be joined by welding shall be fitted, aligned, and retained in position during the welding operation by the use of bars, jacks, clamps, or other mechanical fixtures. Welded temporary attachments shall not be used except when it is impractical to use mechanical fixtures. When temporary attachments are used, they shall be the same material as the base metal, and shall be completely removed by grinding or thermal cutting after the welding operation is completed. If thermal cutting is used, the attachment shall be cut to not less than 6 mm (1/4 inch) from the member and the balance removed by grinding. After the temporary attachment has been removed, the area shall be visually examined.

3.1.3 Preheat and Interpass Temperatures

Preheat temperatures shall meet the requirements specified by ASME B31.8. However, in no case shall the preheat be below 10 degrees C (50 degrees F) for ferritic steel or austenitic stainless steel, or 0 degrees C (32 degrees F) for nonferrous alloys. The maximum interpass temperatures shall not exceed 149 degrees C (300 degrees F) for austenitic stainless steels, nickel alloys, and copper alloys; and 260 degrees C (500 degrees F) for carbon steels. Preheat techniques shall be such as to ensure that the full thickness of the weld joint preparation and/or adjacent base material, at least 80 mm (3 inches) in all directions, is at the specified temperature. Preheating by induction or resistance methods is preferred. When flame heating is used, only a neutral flame shall be employed. Oxy-fuel heating shall not be used on austenitic stainless steel or nickel-alloy materials; however, air-fuel heating is acceptable if controlled to insure that the surface temperature does not exceed 66 degrees C (150 degrees F). Interpass temperatures shall be checked on the surface of the component within 25 mm (1 inch) of the weld groove and at the starting location of the next weld pass, and for a distance of about 150 mm (6 inches) ahead of the weld, but not on the area to be welded.

3.1.4 Production Welding Instructions

a. Welding shall not be done when the ambient temperature is lower than -18 degrees C (0 degree F).

b. Welding is not permitted on surfaces that are wet or covered with ice, when snow or rain is falling on the surfaces to be welded, or during periods of high winds, unless the welders and the work are properly protected.

c. Gases for purging and shielding shall be welding grade and shall have a dew point of minus 40 degrees C (minus 40 degrees F) or lower.

d. Back purges are required for austenitic stainless steels and nonferrous alloys welded from one side and shall be set up such that the flow of gas from the inlet to the outlet orifice passes across the area to be welded. The oxygen content of the gas exiting from the purge vent shall be less than 2 percent prior to welding.

e. The purge on groove welds shall be maintained for at least three layers or 5 mm (3/16 inch).

f. Removable purge dam materials shall be made of expandable or flexible plugs, such as plexiglass, plywood (which shall be dry when used), etc. Wood dams shall be kiln-dried quality. Nonremovable purge dams and purge dam adhesives shall be made of water soluble materials. Purge dams shall not be made of polyvinyl alcohol.

g. Any welding process which requires the use of external gas shielding shall not be done in a draft or wind unless the weld area is protected by a shelter. This shelter shall be of material and shape appropriate to reduce wind velocity in the vicinity of the weld to a maximum of 8 km per hour (5 mph) (440 fpm).

h. Welding of low-alloy and hardenable high-alloy steels may be interrupted provided a minimum of at least 10 mm (3/8 inch) thickness of weld deposit or 25 percent of the weld groove is filled, whichever is greater, and the preheat temperature is maintained during the time that welding is interrupted. If the temperature falls below the minimum preheat temperature before all welding has been completed on a joint, or, where required, before post weld heat treatment, a liquid penetrant or magnetic particle examination shall be performed to insure sound deposited metal before reheating. Welding of other materials may be interrupted without restriction provided a visual inspection is performed before welding is resumed.

i. Tack welds to be incorporated in the final welds shall have their ends tapered by grinding or welding technique. Tack welds that are cracked or defective shall be removed and the groove shall be retacked prior to welding. Temporary tack welds shall be removed, the surface ground smooth, and visually inspected. For low-alloy and hardenable high-alloy steels, the area shall be magnetic particle examination inspected.

j. When joining ferritic steel pressure piping components to austenitic stainless steel pressure piping components and postweld

heat treatment is required, the following requirements apply:

(1) The weld-end preps of ferritic steel components, which are to be welded to austenitic stainless steel, shall be buttered with one of the following weld filler metals and shall conform to the specified requirements:

ASME BPV II Pt C, SFA 5.14, Classification ERNiCr-3.

ASME BPV II Pt C, SFA 5.11, Classification ENiCrFe-2.

(2) The ferritic steel weld-end prep shall be buttered, receive a postweld heat treatment as required by ASME B31.8 and then be machined with the applicable weld-end preparation. After machining, the buttered layer shall be a minimum of 6 mm (1/4 inch) thick.

(3) Pressure piping transition joints shall be completed using ERNiCr-3 or ENiCrFe-2 weld filler metals. No further postweld heat treatment shall be performed.

k. When joining ferritic steel pressure piping components to austenitic stainless steel pressure piping components and postweld heat treatment is not required, prepare and weld the joint using either ERNiCr-3 or ENiCrFe-2 filler metals. For service temperatures of 93 degrees C (200 degrees F) or less, stainless filler metal 309 ASME BPV II Pt C, SFA 5.4 or 5.9 is permissible in lieu of the nickel-based alloys.

l. Grinding of completed welds is to be performed only to the extent required for NDE, including any inservice examination, and to provide weld reinforcement within the requirements of ASME B31.8. If the surface of the weld requires grinding, reducing the weld or base material below the minimum required thickness shall be avoided. Minimum weld external reinforcement shall be flush between external surfaces.

3.1.5 Postweld Heat Treatment

Postweld heat treatment shall be performed in accordance with ASME B31.8. Temperatures for local postweld heat treatment shall be measured continuously by thermocouples in contact with the weldment.

Postweld heat treatment of low-alloy steels, when required, shall be performed immediately upon completion of welding and prior to the temperature of the weld falling below the preheat temperature. However, postweld heat treatment may be postponed after the completion of the weld, if, immediately after the weld is completed, it is maintained at a minimum temperature of 149 degrees C (300 degrees F) or the preheat temperature, whichever is greater, for 2 hours per 25 mm of weld thickness.

For low-alloy steels, the cooling rates shall be such that temper embrittlement is avoided.

3.2 EXAMINATIONS, INSPECTIONS, AND TESTS

Visual and NDE shall be performed by the Contractor to detect surface and internal discontinuities in completed welds. The services of a qualified commercial inspection or testing laboratory or technical consultant,

approved by the Contracting Officer, shall be employed by the Contractor. All tack welds, weld passes, and completed welds shall be visually inspected. When inspection and testing indicates defects in a weld joint, the weld shall be repaired by a qualified welder in accordance with paragraph CORRECTIONS AND REPAIRS.

TABLE I. MANDATORY MINIMUM NONDESTRUCTIVE EXAMINATIONS

Type Weld	Piping Service Conditions and Nondestructive Test
	All others.
Butt Welds (Girth and Longitudinal) l	Visual for all sizes and thicknesses.
Welded Branch Connections (Size indicated is branch size) (See Note 7)	Visual for all sizes and thicknesses.
Fillet, Socket Attachment and Seal Welds	Visual for all sizes and thicknesses.

3.2.1 Visual Inspection

Weld joints shall be inspected visually as follows:

a. Before welding - for compliance with requirements for joint preparation, placement of backing rings or consumable inserts, alignment and fit-up, and cleanliness.

b. During welding - for cracks and conformance to the qualified welding procedure.

c. After welding - for cracks, contour and finish, bead reinforcement, undercutting, overlap, and size of fillet welds.

3.2.2 Inspection and Tests by the Government

The Government will perform inspection and supplemental nondestructive or destructive tests as deemed necessary. The cost of supplemental NDE will be borne by the Government. The correction and repair of defects and the reexamination of weld repairs shall be performed by the Contractor at no additional cost to the Government. Inspection and tests will be performed as required for visual inspection and NDE, except that destructive tests may be required also. When destructive tests are ordered by the Contracting Officer and performed by the Contractor and the specimens or other supplemental examinations indicate that the materials and workmanship

do not conform to the contract requirements, the cost of the tests, corrections, and repairs shall be borne by the Contractor. When the specimens or other supplemental examinations of destructive tests indicate that materials or workmanship do conform to the specification requirements, the cost of the tests and repairs will be borne by the Government. When destructive tests are made, repairs shall be made by qualified welders or welding operators using welding procedures which will develop the full strength of the members cut. Welding shall be subject to inspection and tests in the mill, shop, and field. When materials or workmanship do not conform to the specification requirements, the work may be rejected at any time before final acceptance of the system containing the weldment.

3.3 ACCEPTANCE STANDARDS

3.3.1 Visual

The following indications are unacceptable:

a. Cracks.

b. Undercut on surface which is greater than 1 mm (1/32 inch) deep.

c. Weld reinforcement greater than 5 mm (3/16 inch).

d. Lack of fusion on surface.

e. Incomplete penetration (applies only when inside surface is readily accessible).

f. Convexity of fillet weld surface greater than 10 percent of longest leg plus 0.76 mm (0.03 inch).

g. Concavity in groove welds.

h. Concavity in fillet welds greater than 2 mm (1/16 inch).

i. Fillet weld size less than indicated or greater than 1-1/4 times the minimum indicated fillet leg length.

3.4 CORRECTIONS AND REPAIRS

Defects shall be removed and repaired as specified in ASME B31.8 unless otherwise specified. Disqualifying defects discovered between weld passes shall be repaired before additional weld material is deposited. Wherever a defect is removed, and repair by welding is not required, the affected area shall be blended into the surrounding surface eliminating sharp notches, crevices, or corners. After defect removal is complete and before rewelding, the area shall be examined by the same test method which first revealed the defect to ensure that the defect has been eliminated. After rewelding, the repaired area shall be reexamined by the same test method originally used for that area. Any indication of a defect shall be regarded as a defect unless reevaluation by NDE or by surface conditioning shows that no disqualifying defects are present. The use of any foreign material to mask, fill in, seal, or disguise welding defects will not be permitted.

-- End of Section --

SECTION 15080

THERMAL INSULATION FOR MECHANICAL SYSTEMS

PART 1 GENERAL

1.1 REFERENCES

The publications listed below form a part of this specification to the extent referenced. The publications are referred to in the text by basic designation only. At the discretion of the government, the manufacturer of any material supplied will be required to furnish test reports pertaining to any of the tests necessary to assure compliance with the standard or standards referenced in this specification.

AMERICAN SOCIETY FOR TESTING AND MATERIALS (ASTM)

ASTM A 167	(1996) Stainless and Heat-Resisting Chromium-Nickel Steel Plate, Sheet, and Strip
ASTM A 580/A 580M	(1995a) Stainless and Steel Wire
ASTM B 209	(1996) Aluminum and Aluminum-Alloy Sheet and Plate
ASTM C 195	(1995) Mineral Fiber Thermal Insulating Cement
ASTM C 449/C 449M	(1995) Mineral Fiber Hydraulic-Setting Thermal Insulating and Finishing Cement
ASTM C 533	(1995) Calcium Silicate Block and Pipe Thermal Insulation
ASTM C 534	(1994) Preformed Flexible Elastomeric Cellular Thermal Insulation in Sheet and Tubular Form
ASTM C 547	(1995) Mineral Fiber Pipe Insulation
ASTM C 552	(1991) Cellular Glass Thermal Insulation
ASTM C 553	(1992) Mineral Fiber Blanket Thermal Insulation for Commercial and Industrial Applications
ASTM C 612	(1993) Mineral Fiber Block and Board Thermal Insulation
ASTM C 647	(1995) Properties and Tests of Mastics and Coating Finishes for Thermal Insulation
ASTM C 795	(1992) Thermal Insulation for Use in Contact With Austenitic Stainless Steel

ASTM C 871	(1995) Chemical Analysis of Thermal Insulation Materials for Leachable Chloride, Fluoride, Silicate, and Sodium Ions
ASTM C 916	(1985; Rev 1996) Adhesives for Duct Thermal Insulation
ASTM C 920	(1995) Elastomeric Joint Sealants
ASTM C 921	(1989 R; 1996) Determining the Properties of Jacketing Materials for Thermal Insulation
ASTM C 1126	(1996) Specification for Faced or Unfaced Rigid Cellular Phenolic Thermal Insulation
ASTM D 3278	(1996) Test Methods for Flash Point of Liquids by Small Scale & Closed-Cup Apparatus
ASTM E 84	(1996a) Surface Burning Characteristics of Building Materials
ASTM E 96	(1995) Water Vapor Transmission of Materials

MANUFACTURERS STANDARDIZATION SOCIETY OF THE VALVE AND FITTINGS INDUSTRY (MSS)

MSS SP-69	(1996) Pipe Hangers and Supports - Selection and Application

MIDWEST INSULATION CONTRACTORS ASSOCIATION (MICA)

MICA-01	(1993) National Commercial & Industrial Insulation Standards

1.2 SYSTEM DESCRIPTION

Field-applied insulation and accessories on mechanical systems shall be as specified herein; factory-applied insulation is specified under the piping, duct or equipment to be insulated. Field applied insulation materials required for use on Government-furnished items as listed in the SPECIAL CONTRACT REQUIREMENTS shall be furnished and installed by the Contractor.

1.3 GENERAL QUALITY CONTROL

1.3.1 Standard Products

Materials shall be the standard products of manufacturers regularly engaged in the manufacture of such products and shall essentially duplicate items that have been in satisfactory use for at least 2 years prior to bid opening.

1.3.2 Installer's Qualifications

Qualified installers shall have successfully completed three or more

similar type jobs within the last 5 years.

1.3.3 Surface Burning Characteristics

Unless otherwise specified, insulation not covered with a jacket shall have a flame spread rating no higher than 75 and a smoke developed rating no higher than 150. The outside surface of insulation systems which are located in air plenums, in ceiling spaces, and in attic spaces shall have a flame spread rating no higher than 25 and a smoke developed rating no higher than 50. Insulation materials located exterior to the building perimeter are not required to be fire-rated. Flame spread and smoke developed ratings shall be determined by ASTM E 84. Insulation shall be tested in the same density and installed thickness as the material to be used in the actual construction. Jackets shall comply with the flame spread and smoke developed ratings of 25/50 as determined by ASTM E 84.

1.3.4 Identification of Materials

Packages or standard containers of insulation, jacket material, cements, adhesives, and coatings delivered for use, and samples required for approval shall have manufacturer's stamp or label attached giving the name of the manufacturer and brand, and a description of the material.

1.4 SUBMITTALS

Government approval is required for submittals with a "GA" designation; submittals having an "FIO" designation are for information only. The following shall be submitted in accordance with Section 01300 SUBMITTAL PROCEDURES:

SD-14 Samples

Thermal Insulation Materials; FIO;AR.

A complete list of materials, including manufacturer's descriptive technical literature, performance data, catalog cuts, and installation instructions. The product number, k-value, thickness and furnished accessories for each mechanical system requiring insulation shall be included. Materials furnished under this section of the specification shall be submitted at one time.

After approval of materials and prior to applying insulation a booklet shall be prepared and submitted for approval. The booklet shall contain marked-up MICA-01 plates (or detail drawings showing the insulation material and insulating system) for each pipe, duct, or piece of equipment required to be insulated per this specification. The MICA plates shall be marked up showing the materials to be installed in accordance with the requirements of this specification for the specific insulation application. The Contractor shall submit all MICA Plates required to show the entire insulating system, including Plates required to show insulation penetrations, vessel bottom and top heads, legs, and skirt insulation as applicable. If the Contractor elects to submit detailed drawings instead of marked-up MICA Plates, the detail drawings shall show cut-away, section views, and details indicating each component of the insulation system and showing provisions for insulating jacketing, and sealing portions of the equipment. For each type of insulation installation on the drawings, provide a label which identifies each component in the installation (i.e., the duct, insulation, adhesive, vapor retarder, jacketing, tape, mechanical fasteners, etc.) Indicate insulation by type and manufacturer. Three

copies of the booklet shall be submitted at the jobsite to the Contracting Officer. One copy of the approved booklet shall remain with the insulation Contractor's display sample and two copies shall be provided for Government use.

After approval of materials actual sections of installed systems properly insulated in accordance with the specification requirements shall be displayed. Such actual sections must remain accessible to inspection throughout the job and will be reviewed from time to time for controlling the quality of the work throughout the construction site. Each material used shall be identified, by indicating on an attached sheet the specification requirement for the material and the material by each manufacturer intended to meet the requirement. Display sample sections will be inspected at the jobsite by the Contracting Officer. Approved display sample sections shall remain on display at the jobsite during the construction period. Upon completion of construction, the display sample sections will be closed and sealed.

Pipe Insulation Display Sections: Display sample sections shall include as a minimum an elbow or tee, a valve, dielectric unions and flanges, a hanger with protection shield and insulation insert, or dowel as required, at support point, method of fastening and sealing insulation at longitudinal lap, circumferential lap, butt joints at fittings and on pipe runs, and terminating points for each type of pipe insulation used on the job, and for hot pipelines and cold pipelines, both interior and exterior, even when the same type of insulation is used for these services.

Duct Insulation Display Sections: Display sample sections for rigid and flexible duct insulation used on the job. A display section for duct insulation exposed to weather shall be protected by enclosing with a temporary covering.

1.5 STORAGE

Materials shall be delivered in the manufacturer's unopened containers. Materials delivered and placed in storage shall be provided with protection from weather, humidity, dirt, dust and other contaminants. Insulation material and supplies that become dirty, dusty, wet, or otherwise contaminated may be rejected by the Contracting Officer.

PART 2 PRODUCTS

2.1 GENERAL MATERIALS

Materials shall be compatible and shall not contribute to corrosion, soften, or otherwise attack surfaces to which applied in either the wet or dry state. Materials to be used on stainless steel surfaces shall meet ASTM C 795 requirements. Materials shall be asbestos free and conform to the following:

2.1.1 Adhesives

2.1.1.1 Acoustical Lining Insulation Adhesive

Insulation shall be applied in cut-to-size pieces attached to the interior of the duct with a nonflammable, fire-resistant adhesive conforming to ASTM C 916, Type I. Exposed edges of the liner at the duct ends and at other joints where the lining will be subject to erosion shall be coated with a heavy brush coat of the nonflammable, fire-resistant adhesive to prevent

delamination of glass fibers.

2.1.1.2 Mineral Fiber Insulation Cement

Cement shall be in accordance with ASTM C 195.

2.1.1.3 Lagging Adhesive

Lagging adhesives shall be nonflammable and fire-resistant and shall have flame spread and smoke developed ratings of 25/50 when measured in accordance with ASTM E 84. Adhesives shall be either the Class 1 or Class 2 type as defined below. Class 1 adhesive shall be pigmented white or red and be suitable for bonding fibrous glass cloth to faced and unfaced fibrous glass insulation board; for bonding cotton brattice cloth to faced and unfaced fibrous glass insulation board; for sealing edges of and bounding fibrous glass tape to joints of fibrous glass board; or for bonding lagging cloth to thermal insulation. Class 2 adhesive shall be pigmented white and be suitable for attaching fibrous glass insulation to metal surfaces. Lagging adhesives shall be applied in strict accordance with the manufacturer's recommendations.

2.1.2 Contact Adhesive

Adhesive may be dispersed in a nonhalogenated organic solvent with a low flash point (flash point less than minus 3.9 degrees C when tested in accordance with ASTM D 3278) or, dispersed in a nonflammable organic solvent which shall not have a fire point below 94 degrees C. The adhesive shall not adversely affect, initially or in service, the insulation to which it is applied, nor shall it cause any corrosive effect on metal to which it is applied. Any solvent dispersing medium or volatile component of the adhesive shall have no objectionable odor and shall not contain any benzene or carbon tetrachloride. The dried adhesive shall not emit nauseous, irritating, or toxic volatile matters or aerosols when the adhesive is heated to any temperature up to 100 degrees C. The adhesive shall be nonflammable and fire resistant.

2.1.3 Caulking

ASTM C 920, Type S, Grade NS, Class 25, Use A.

2.1.4 Corner Angles

Nominal 0.4060 mm (0.016 inch) aluminum 25 x 25 mm (1 x 1 inch) with factory applied kraft backing. Aluminum shall be ASTM B 209, Alloy 3003, 3105, or 5005.

2.1.5 Finishing Cement

Mineral fiber hydraulic-setting thermal insulating cement ASTM C 449/C 449M.

2.1.6 Fibrous Glass Cloth and Glass Tape

Fibrous glass cloth and glass tape shall have flame spread and smoke developed ratings of no greater than 25/50 when measured in accordance with ASTM E 84. Fibrous glass cloth and tape shall be 20 x 20 maximum size mesh. Tape shall be 100 mm wide rolls. Class 3 tape shall be 0.15 kg per square meter.

2.1.7 Staples

Outward clinching type ASTM A 167, Type 304 or 316 stainless steel.

2.1.8 Jackets

ASTM C 921, Type I, maximum moisture vapor transmission 0.02 perms, minimum puncture resistance 50 Beach units on all surfaces except concealed ductwork, where a minimum puncture resistance of 25 Beach units is acceptable. Minimum tensile strength, 6.1 N/mm (35 pounds/inch) width. ASTM C 921, Type II, minimum puncture resistance 25 Beach units, tensile strength minimum 3.5 N/mm (20 pound/inch) width. Jackets used on insulation exposed in finished areas shall have white finish suitable for painting without sizing.

2.1.8.1 White Vapor Retarder ASJ (All Service Jacket)

For use on hot/cold pipes, ducts, or equipment vapor retarder jackets used on insulation exposed in finished areas shall have white finish suitable for painting without sizing.

2.1.8.2 Aluminum Jackets

Aluminum jackets shall be corrugated, embossed or smooth sheet, 0.4060 mm (0.016 inch) nominal thickness; ASTM B 209, Temper H14, Temper H16, Alloy 3003, 5005, or 3105 with factory applied moisture retarder. Corrugated aluminum jacket shall not be used outdoors. Aluminum jacket securing bands shall be Type 304 stainless steel, 0.3960 mm (0.015 inch) thick, 12.7 mm (1/2 inch) wide for pipe under 300 mm (12 inch) diameter and 19.1 mm (3/4 inch) wide for pipe over 300 mm (12 inch) amd larger diameter. Aluminum jacket circumferential seam bands shall be 50.8 x 0.4060 mm (2 x 0.016 inch) aluminum matching jacket material. Bands for insulation below ground shall be 19.1 x 0.5080 mm (3/4 x 0.020 inch) thick stainless steel, or fiberglass reinforced tape. The jacket may, at the option of the Contractor, be provided with a factory fabricated Pittsburg or "Z" type longitudinal joint. When the "Z" joint is used, the bands at the circumferential joints shall be designed by the manufacturer to seal the joints and hold the jacket in place.

2.1.8.3 Polyvinyl Chloride (PVC) Jackets

Polyvinyl chloride (PVC) jacket and fitting covers shall have high impact strength, UV resistant rating or treatment and moderate chemical resistance with minimum thickness 0.7620 mm (0.030 inch). Insulation under PVC jacket shall meet jacket manufacturer's written recommendations.

2.1.9 Vapor Retarder Coating

The vapor retarder coating shall be fire and water resistant and appropriately selected for either outdoor or indoor service. Color shall be white. The water vapor permeance of the compound shall not exceed 0.05 perm and shall be determined according to procedure B of ASTM E 96 utilizing apparatus described in ASTM E 96. The coating shall be a nonflammable, fire resistant type. The flash point of the compound shall not be less than 26.7 degrees C and shall be determined in accordance with ASTM D 3278. All other application and service properties shall be in accordance with ASTM C 647.

2.1.10 Wire

Soft annealed ASTM A 580/A 580M Type 302, 304 or 316 stainless steel, 16 or 18 gauge.

2.2 PIPE INSULATION MATERIALS

Pipe insulation materials shall be as follows:

2.2.1 Aboveground Cold Pipeline

Insulation for minus 34 degrees to plus 16 degrees C shall be as follows:

2.2.1.1 Cellular Glass

ASTM C 552, Type II, and Type III.

2.2.1.2 Flexible Cellular Insulation

ASTM C 534, Type I or II. Type II shall have vapor retarder skin on both sides of the insulation.

2.2.1.3 Phenolic Insulation

ASTM C 1126, Type III. A maximum allowable leachable chloride content shall comply with ASTM C 795 when tested in accordance with ASTM C 871.

2.2.2 Aboveground Hot Pipeline

For aboveground hot pipeline above 16 degrees C insulation the following requirements shall be met.

2.2.2.1 Mineral Fiber

ASTM C 547, Class 1 or Class 2 as required for the operating temperature range.

2.2.2.2 Calcium Silicate

ASTM C 533, Type I indoor only, or outdoors above 121 degrees C (250 degrees F) pipe temperature.

2.2.2.3 Cellular Glass

ASTM C 552, Type II and Type III.

2.2.2.4 Flexible Cellular Insulation

ASTM C 534, Type I or II to 93 degrees C (200 degrees F) service.

2.2.2.5 Phenolic Insulation

ASTM C 1126 Type III to 121 C service. A maximum allowable leachable chloride content shall comply with ASTM C 795 when tested in accordance with ASTM C 871.

2.2.3 Below ground Pipeline Insulation

ASTM C 552, Type II.

2.3 DUCT INSULATION MATERIALS

Duct insulation materials shall be as follows:

2.3.1 Rigid Mineral Fiber

ASTM C 612, Class 1.

2.3.2 Flexible Mineral Fiber

ASTM C 553, Type I, Class B-2.

2.3.3 Cellular Glass

ASTM C 552, Type I.

2.3.4 Phenolic Foam

ASTM C 1126 Type II. A maximum allowable leachable chloride content shall comply with ASTM C 795 when tested in accordance with ASTM C 871.

2.3.5 Flexible Cellular

ASTM C 534 Type II.

2.4 EQUIPMENT INSULATION MATERIALS

Equipment insulation materials shall be as follows:

2.4.1 Cold Equipment Insulation

For temperatures below 16 degrees C.

2.4.1.1 Cellular Glass

ASTM C 552, Type I, Type III, or Type IV as required.

2.4.1.2 Flexible Cellular Insulation

ASTM C 534, Type II.

2.4.1.3 Phenolic Foam

ASTM C 1126 Type II. A maximum allowable leachable chloride content shall comply with ASTM C 795 when tested in accordance with ASTM C 871.

2.4.2 Hot Equipment Insulation

For temperatures above 16 degrees C.

2.4.2.1 Rigid Mineral Fiber

ASTM C 612, Type 2, 3, 4 or 5 as required for temperature encountered to 982 degrees C (1800 degrees F).

2.4.2.2 Flexible Mineral Fiber

ASTM C 553, Type 1, 2, 3, 4, 5, 6, or 7 as required for temperature encountered to 649 degrees C (1200 degrees F).

2.4.2.3 Calcium Silicate

ASTM C 533, Type I, indoors only, or outdoors above 121 degrees C (250 degrees F). Pipe shape may be used on diesel engine exhaust piping and mufflers to 649 degrees C (1200 degrees F).

2.4.2.4 Cellular Glass

ASTM C 552, Type I, Type III, or Type IV as required.

2.4.2.5 Flexible Cellular Insulation

ASTM C 534, Type II, to 93 degrees C (200 degrees F).

2.4.2.6 Phenolic Foam

ASTM C 1126 Type II to 121 degrees C (250 degrees F). A maximum allowable leachable chloride content shall comply with ASTM C 795 when tested in accordance with ASTM C 871.

PART 3 EXECUTION

3.1 APPLICATION - GENERAL

3.1.1 Installation

Except as otherwise specified, material shall be installed in accordance with the manufacturer's written instructions. Insulation materials shall not be applied until tests and heat tracing specified in other sections of this specification are completed. Material such as rust, scale, dirt and moisture shall be removed from surfaces to receive insulation. Insulation shall be kept clean and dry. Insulation shall not be removed from its shipping containers until the day it is ready to use and shall be returned to like containers or equally protected from dirt and moisture at the end of each workday. Insulation that becomes dirty shall be thoroughly cleaned prior to use. If insulation becomes wet or if cleaning does not restore the surfaces to like new condition, the insulation will be rejected, and shall be immediately removed from the jobsite. Joints shall be staggered on multi layer insulation. Mineral fiber thermal insulating cement shall be mixed with demineralized water when used on stainless steel surfaces. Insulation, jacketing and accessories shall be installed in accordance with MICA-01 standard plates except where modified herein or on the drawings.

3.1.2 Fire stopping

Where pipes and ducts pass through fire walls, fire partitions, above grade floors, and fire rated chase walls, the penetration shall be sealed with fire stopping materials as specified in Section 07270 FIRE STOPPING.

3.1.3 Painting and Finishing

Painting shall be as specified in Section 09900 PAINTING, GENERAL.

3.1.4 Flexible Cellular Insulation

Flexible cellular insulation shall be installed with seams and joints sealed with a contact adhesive. Flexible cellular insulation shall not be used on surfaces greater than 93 degrees C. Seams shall be staggered when applying multiple layers of insulation. Insulation exposed to weather and

not shown to have jacketing shall be protected with two coats of UV resistant finish as recommended by the manufacturer after the adhesive is dry.

3.1.5 Welding

No welding shall be done on piping, duct or equipment without written approval of the Contracting Officer. The capacitor discharge welding process may be used for securing metal fasteners to duct.

3.1.6 Pipes/Ducts/Equipment which Require Insulation

Insulation is required, unless stated otherwise, on all pipes, ducts, or equipment, which operate at or below 15.6 C and at or above 26.7 C.

3.2 PIPE INSULATION INSTALLATION

3.2.1 Pipe Insulation

3.2.1.1 General

Pipe insulation shall be installed on aboveground hot and cold pipeline systems as specified below to form a continuous thermal retarder, including straight runs, fittings and appurtenances unless specified otherwise. Installation shall be with full length units of insulation and using a single cut piece to complete a run. Cut pieces or scraps abutting each other shall not be used. Pipe insulation shall be omitted on the following:

a. Pipe used solely for fire protection.

b. Chromium plated pipe to plumbing fixtures. However, fixtures for use by the physically handicapped shall have the hot water supply and drain, including the trap, insulated where exposed.

c. Sanitary drain lines.

d. Unions in pipe above 16 degrees C.

e. Strainers in pipe above 16 degrees C.

f. Check valves in pipe above 16 degrees C.

g. Air chambers.

3.2.1.2 Pipes Passing Through Sleeves

a. Pipe insulation shall be continuous through the sleeve.

b. An aluminum jacket with factory applied moisture retarder shall be provided over the insulation wherever penetrations require sealing.

c. Where penetrating interior walls, the aluminum jacket shall extend 50 mm beyond either side of the wall and shall be secured on each end with a band.

d. Where penetrating floors, the aluminum jacket shall extend from a point below the backup material to a point 250 mm above the floor with one band at the floor and one not more than 25 mm from the end of the aluminum jacket.

e. Where penetrating waterproofed floors, the aluminum jacket shall extend from below the backup material to a point 50 mm above the flashing with a band 25 mm from the end of the aluminum jacket.

f. Where penetrating exterior walls, the aluminum jacket required for pipe exposed to weather shall continue through the sleeve to a point 50 mm beyond the interior surface of the wall.

g. Where penetrating roofs, pipe shall be insulated as required for interior service to a point flush with the top of the flashing and sealed with vapor retarder coating. The insulation for exterior application shall butt tightly to the top of flashing and interior insulation. The exterior aluminum jacket shall extend 50 mm down beyond the end of the insulation to form a counter flashing. The flashing and counter flashing shall be sealed underneath with caulking.

h. In high abuse areas such as janitor closets and traffic areas in equipment rooms and mechanical rooms, aluminum jackets shall be utilized. Pipe insulation to the 1.5 m level shall be protected.

3.2.1.3 Pipes Passing Through Hangers

a. Insulation, whether hot or cold application, shall be continuous through hangers. All horizontal pipes 50 mm and smaller shall be supported on hangers with the addition of a Type 40 protection shield to protect the insulation in accordance with MSS SP-69. Whenever insulation shows signs of being compressed, or when the insulation or jacket shows visible signs of distortion at or near the support shield, insulation inserts as specified below for piping larger than 50 mm shall be installed.

b. Horizontal pipes larger than 50 mm at 16 degrees C and above shall be supported on hangers in accordance with MSS SP-69, and Section 15400 PLUMBING, GENERAL PURPOSE.

c. Horizontal pipes larger than 50 mm and below 16 degrees C shall be supported on hangers with the addition of a Type 40 protection shield in accordance with MSS SP-69. An insulation insert of cellular glass or calcium silicate shall be installed above each shield. The insert shall cover not less than the bottom 180 degree arc of the pipe. Inserts shall be the same thickness as the insulation, and shall extend 50 mm on each end beyond the protection shield. When insulation inserts are required per the above, and the insulation thickness is less than 25 mm, wooden or cork dowels or blocks may be installed between the pipe and the shield to prevent the weight of the pipe from crushing the insulation, as an option to installing insulation inserts. The insulation jacket shall be continuous over the wooden dowel, wooden block, or insulation insert.

d. Vertical pipes shall be supported with either Type 8 or Type 42 riser clamps with the addition of two Type 40 protection shields in accordance with MSS SP-69 covering the 360 degree arc of the insulation. An insulation insert of cellular glass or calcium silicate shall be installed between each shield and the pipe. The insert shall cover the 360 degree arc of the pipe. Inserts shall be the same thickness as the insulation, and shall extend 50 mm

on each end beyond the protection shield. When insulation inserts are required per the above, and the insulation thickness is less than 25 mm, wooden or cork dowels or blocks may be installed between the pipe and the shield to prevent the hanger from crushing the insulation, as an option instead of installing insulation inserts. The insulation jacket shall be continuous over the wooden dowel, wooden block, or insulation insert. The vertical weight of the pipe shall be supported with hangers located in a horizontal section of the pipe. When the pipe riser is longer than 9 m, the weight of the pipe shall be additionally supported with hangers in the vertical run of the pipe which are directly clamped to the pipe, penetrating the pipe insulation. These hangers shall be insulated and the insulation jacket sealed as indicated herein for anchors in a similar service.

e. Inserts shall be covered with a jacket material of the same appearance and quality as the adjoining pipe insulation jacket, shall overlap the adjoining pipe jacket 38 mm, and shall be sealed as required for the pipe jacket. The jacket material used to cover inserts in flexible cellular insulation shall conform to ASTM C 921, Type 1, and is allowed to be of a different material than the adjoining insulation material.

3.2.1.4 Pipes Passing Through Walls

a. For hot water pipes supplying lavatories or other similar heated service which requires insulation, the insulation shall be terminated on the backside of the finished wall. The insulation termination shall be protected with two coats of vapor barrier coating with a minimum total thickness of 2.0 mm applied with glass tape embedded between coats (if applicable). The coating shall extend out onto the insulation 51.0 mm and shall seal the end of the insulation. Glass tape seams shall overlap 25 mm. Caulk the annular space between the pipe and wall penetration. Cover the pipe and wall penetration with a properly sized (well fitting) escutcheon plate. The escutcheon plate shall overlap the wall penetration at least 10 mm.

b. For domestic cold water pipes requiring insulation, the insulation shall be terminated on the finished side of the wall (i.e. insulation must cover the pipe throughout the wall penetration). The insulation shall be protected with two coats of vapor barrier coating with a minimum total thickness of 2.0 mm. The coating shall extend out onto the insulation 51.0 mm and shall seal the end of the insulation. Caulk the annular space between the pipe and wall penetration. Cover the pipe and wall penetration with a properly sized (well fitting) escutcheon plate. The escutcheon plate shall overlap the wall penetration by at least 10 mm.

3.2.1.5 Flexible Cellular Pipe Insulation

Flexible cellular pipe insulation shall be tubular form for pipe sizes 150 mm and less. Type II sheet insulation used on pipes larger than 150 mm shall not be stretched around the pipe. On pipes larger than 300 mm, adhere insulation directly to the pipe on the lower 1/3 of the pipe. Seams shall be staggered when applying multiple layers of insulation. Sweat fittings shall be insulated with miter-cut pieces the same size as on adjacent piping. Screwed fittings shall be insulated with sleeved fitting covers fabricated from miter-cut pieces and shall be overlapped and sealed

to the adjacent pipe insulation.

3.2.2 Aboveground Cold Pipelines

The following shall be included for aboveground cold pipelines minus 34 degrees C to plus 16 degrees C:

a. Domestic cold water.

b. Make-up water.

c. Horizontal and vertical portions of interior roof drains.

d. Refrigerant suction lines.

e. Chilled water.

f. Air conditioner condensate drains.

3.2.2.1 Insulation Thickness

Insulation thickness for cold pipelines shall be determined using Table I.

Table I - Cold Piping Insulation Thickness
Pipe Size (mm)

Type of Service	Material	Runouts up to 51 mm*	25 mm & less	32 - 51 mm	64 - 102 mm	127 - 152 mm	203 mm & larger
Refrigerant suction piping	CG		38	38	38	38	38
	FC		25	25	25	25	25
	PF		25	25	25	25	25
Chilled water supply & return	CG	38	38	38	51	51	51
	FC	13	25	25	25	25	25
	PF	13	25	25	25	25	25
Cold domestic water, above and below ceilings	CG	38	38	38	38	38	38
	FC	10	10	10	10	10	10
	PF	10	10	10	10	10	10
Exposed lavatory drains exposed domestic water piping & drains to areas for handicap personnel	FC	13	13	13	13	19	19
	MF	13	25	25	38	38	38
Horizontal roof drain leaders (including underside of	FC		25	38	38	38	38
	PF		13	13	13	13	13
	CG		38	38	38	38	38

Table I - Cold Piping Insulation Thickness
Pipe Size (mm)

Type of Service	Material	Runouts up to 51 mm*	25 mm & less	32 - 51 mm	64 - 102 mm	127 - 152 mm	203 mm & larger
roof drain fitting)							
Vertical roof drain leaders leaders	FC		25	25	38	38	38
	PF		13	13	13	13	13
	CG		38	38	38	38	38
Air conditioning condensate drain located inside building	FC		10	13	13	N/A	N/A
	PF		10	10	10	N/A	N/A

*When runouts to terminal units exceed 3.66 m the entire length of runout shall be insulated like the main feed pipe.

LEGEND:

PF - Phenolic Foam
CG - Cellular Glass
CS - Calcium Silicate
MF - Mineral Fiber
FC - Flexible Cellular

3.2.2.2 Jacket for Fibrous, Cellular Glass, and Phenolic Foam Insulated Pipe

Insulation shall be covered with a factory applied vapor retarder jacket or field applied seal welded PVC jacket. Insulation inside the building shown to be protected with an aluminum jacket shall have the insulation and vapor retarder jacket installed as specified herein. The aluminum jacket shall be installed as specified for piping exposed to weather, except sealing of the laps of the aluminum jacket is not required. In high abuse areas such as janitor closets and traffic areas in equipment rooms and mechanical rooms, aluminum jackets shall be utilized. Pipe insulation to the 1.5 m level will be protected.

3.2.2.3 Insulation for Straight Runs (Fibrous, Cellular Glass and Phenolic Foam)

a. Insulation shall be applied to the pipe with joints tightly butted. The ends of fibrous insulation shall be sealed off with vapor retarder coating at intervals not to exceed 4.5 m.

b. Longitudinal laps of the jacket material shall overlap not less than 38 mm. Butt strips 75 mm wide shall be provided for circumferential joints.

c. Laps and butt strips shall be secured with adhesive and stapled on 100 mm centers if not factory self-sealing.

d. Factory self-sealing lap systems may be used when the ambient temperature is between 4 degrees and 50 degrees C during

installation. The lap system shall be installed in accordance with manufacturer's recommendations. Stapler shall be used only if specifically recommended by the manufacturer. Where gaps occur, the section shall be replaced or the gap repaired by applying adhesive under the lap and then stapling.

e. All Staples, including those used to repair factory self-seal lap systems, shall be coated with a vapor retarder coating. All seams, except those on factory self-seal systems shall be coated with vapor retarder coating.

f. Breaks and punctures in the jacket material shall be patched by wrapping a strip of jacket material around the pipe and securing it with adhesive, stapling, and coating with vapor retarder coating. The patch shall extend not less than 38 mm past the break.

g. At penetrations such as thermometers, the voids in the insulation shall be filled and sealed with vapor retarder coating.

3.2.2.4 Insulation for Fittings and Accessories

a. Pipe insulation shall have ends thoroughly coated with a vapor retarder coating not less than 150 mm from each flange, union, valve, anchor, or fitting in all directions.

b. Precut, preformed insulation for placement over fittings, flanges, unions, valves, anchors, and mechanical couplings shall be used. Precut, preformed insulation shall exhibit the same properties as the adjoining pipe insulation. Where precut/preformed is unavailable, rigid preformed pipe insulation sections may be segmented into the shape required. Insulation of the same thickness and conductivity as the adjoining pipe insulation shall be used. If nesting size insulation is used, the insulation shall be overlapped 50 mm or one pipe diameter. Loose fill mineral fiber or insulating cement shall be used to fill the voids. Elbows insulated using segments shall not have less than 3 segments per elbow.

c. Upon completion of installation of insulation on flanges, unions, valves, anchors, fittings and accessories, terminations and insulation not protected by factory vapor retarder jackets or PVC fitting covers shall be protected with two coats of vapor retarder coating with a minimum total thickness of 2.0 mm, applied with glass tape embedded between coats. Tape seams shall overlap 25 mm. The coating shall extend out onto the adjoining pipe insulation 50 mm.

d. Anchors attached directly to the pipe shall be insulated for a sufficient distance to prevent condensation but not less than 150 mm from the insulation surface.

e. Flexible connections at pumps and other equipment shall be insulated with 15 mm (0.59 inch) flexible cellular insulation, unless otherwise indicated.

f. Insulation shall be marked showing the location of unions, strainers, and check valves.

3.2.2.5 Optional PVC Fitting Covers

At the option of the Contractor, premolded, one or two piece PVC fitting covers may be used in lieu of the vapor retarder and embedded glass tape. Factory premolded insulation segments shall be used under the fitting covers for elbows. Insulation segments shall be the same thickness as adjoining pipe insulation and the insulation shall be protected with one coat of vapor retarder coating under the PVC cover. The covers shall be secured by PVC vapor retarder tape, adhesive, seal-welding or with tacks made for securing PVC covers. Seams in the cover, and tacks and laps to adjoining pipe insulation jacket, shall be sealed with vapor retarder tape to ensure that the assembly has a continuous vapor seal.

3.2.3 Aboveground Hot Pipelines

For hot pipelines above 16 degrees C the following shall be included:

a. Domestic hot water.

b. Hot water heating.

3.2.3.1 Insulation Thickness

Insulation thickness for hot pipelines shall be determined using Table II.

LEGEND:

PF - Phenolic Foam
CG - Cellular Glass
CS - Calcium Silicate
MF - Mineral Fiber
FC - Flexible Cellular

Table II - Hot Piping Insulation Thickness
Pipe Size (mm)

Type of Service (degrees C)	Material	Runouts up to 51 mm	25 mm & less	32 - 51 mm	64 - 102 mm	127 - 152 mm	203 mm & larger
Hot domestic water supply & recirculating system (93.3 C max)	CG	38	38	38	38	38	38
	FC	13	25	25	38	38	38
	PF	13	25	25	25	25	25
	MF	13	25	25	38	38	38
Heating hot water, supply & return (121.1 C max)	CG	38	38	51	51	51	64
	PF	13	25	25	25	25	38
	MF	13	38	38	51	64	76
	CS	25	38	51	64	64	64

*When runouts to terminal units exceed 3.66 m, the entire length of runout shall be insulated like the main feed pipe.

3.2.3.2 Jacket for Insulated Pipe

Insulation shall be covered, in accordance with manufacturer's recommendations, with a factory applied Type II jacket or field applied aluminum where required or seal welded PVC.

3.2.3.3 Insulation for Straight Runs

a. Insulation shall be applied to the pipe with joints tightly butted.

b. Longitudinal laps of the jacket material shall overlap not less than 38 mm, and butt strips 75 mm wide shall be provided for circumferential joints.

c. Laps and butt strips shall be secured with adhesive and stapled on 100 mm centers if not factory self-sealing. Adhesive may be omitted where pipe is concealed.

d. Factory self-sealing lap systems may be used when the ambient temperature is between 4 degrees and 49 degrees C and shall be installed in accordance with manufacturer's instructions. Laps and butt strips shall be stapled whenever there is nonadhesion of the system. Where gaps occur, the section shall be replaced or the gap repaired by applying adhesive under the lap and then stapling.

e. Breaks and punctures in the jacket material shall be patched by wrapping a strip of jacket material around the pipe and be secured with adhesive and stapled on 100 mm centers if not factory self-sealing. Adhesive may be omitted where pipe is concealed. Patch shall extend not less than 38 mm past the break.

f. Flexible cellular pipe insulation shall be installed by slitting tubular sections and applying onto piping or tubing. Alternately, whenever possible, slide unslit sections over the open ends of piping or tubing. All seams and butt joints shall be secured and sealed with adhesive. When using self seal products only the butt joints shall be secured with adhesive. Insulation shall be pushed on the pipe, never pulled. Stretching of insulation may result in open seams and joints. All edges shall be clean cut. Rough or jagged edges of the insulation shall not be permitted. Proper tools such as sharp knives shall be used. Type II sheet insulation when used on pipe larger than 150 mm shall not be stretched around the pipe. On pipes larger than 300 mm, adhere sheet insulation directly to the pipe on the lower 1/3 of the pipe.

3.2.3.4 Insulation for Fittings and Accessories

a. The run of the line pipe insulation shall have the ends brought up to the item.

b. Insulation of the same thickness and conductivity as the adjoining pipe insulation, either premolded or segmented, shall be placed around the item abutting the adjoining pipe insulation, or if nesting size insulation is used, overlapping 50 mm or one pipe diameter. Loose fill mineral fiber or insulating cement shall be used to fill the voids. Insulation for elbows less than 80 mm size shall be premolded. Insulation for elbows 80 mm (3 inch) size and larger shall be either premolded or segmented. Elbows insulated using segments shall have not less than 3 segments per elbow. Insulation may be wired or taped on until finish is

applied.

c. Upon completion of installation of insulation on flanges, unions, valves, anchors, fittings and accessories, terminations and insulation not protected by factory vapor retarder jackets or PVC fitting covers shall be protected with two coats of Class 1 adhesive applied with glass tape embedded between coats. Tape seams shall overlap 25 mm. Adhesive shall extend onto the adjoining insulation not less than 50 mm. The total dry film thickness shall be not less than 2.0 mm.

d. Insulation terminations shall be tapered to unions at a 45-degree angle.

e. At the option of the Contractor, factory premolded one- or two-piece PVC fitting covers may be used in lieu of the adhesive and embedded glass tape. Factory premolded segments or factory or field cut blanket insert insulation segments shall be used under the cover and shall be the same thickness as adjoining pipe insulation. The covers shall be secured by PVC vapor retarder tape, adhesive, seal-welding or with tacks made for securing PVC covers.

3.2.4 Piping Exposed to Weather

Piping exposed to weather shall be insulated and jacketed as specified for the applicable service inside the building. After this procedure, an aluminum jacket shall be applied. PVC jacketing requires no factory applied jacket beneath it. Flexible cellular insulation exposed to weather shall be treated in accordance with paragraph PIPE INSULATION MATERIALS.

3.2.4.1 Aluminum Jacket

The jacket for hot piping may be factory applied. The jacket shall overlap not less than 50 mm at longitudinal and circumferential joints and shall be secured with bands at not more than 300 mm centers. Longitudinal joints shall be overlapped down to shed water and located at 4 or 8 o'clock positions. Joints on piping 16 degrees C and below shall be sealed with caulking while overlapping to prevent moisture penetration. Where jacketing on piping 16 degrees C and below abuts an uninsulated surface, joints shall be caulked to prevent moisture penetration. Joints on piping above 16 degrees C shall be sealed with a moisture retarder.

3.2.4.2 Insulation for Fittings

Flanges, unions, valves, fittings, and accessories shall be insulated and finished as specified for the applicable service. Two coats of an emulsion type weatherproof mastic recommended by the insulation manufacturer shall be applied with glass tape embedded between coats. Tape overlaps shall be not less than 25 mm and the adjoining aluminum jacket not less than 50 mm. Factory preformed aluminum jackets may be used in lieu of the above. Molded PVC fitting covers shall be used with PVC lagging and adhesive welded moisture tight.

3.2.4.3 PVC Lagging

PVC lagging shall be ultraviolet resistant and adhesive welded vapor tight with manufacturer's recommended adhesive. Installation shall include provision for thermal expansion.

3.3 DUCT INSULATION INSTALLATION

Corner angles shall be installed on external corners of insulation on ductwork in exposed finished spaces before covering with jacket.

3.3.1 Duct Insulation Thickness

Duct insulation thickness shall be in accordance with Table III.

Table III - Minimum Duct Insulation (mm)

Cold Air Ducts	50
Relief Ducts	38
Fresh Air Intake Ducts	38
Warm Air Ducts	50
Relief Ducts	38
Fresh Air Intake Ducts	38

3.3.2 Insulation and Vapor Retarder for Cold Air Duct

Insulation and vapor retarder for cold air duct below 16 degrees C: Ducts and associated equipment shall be insulated to a thickness which is in accordance with Table III. The following shall be insulated:

a. Supply ducts.

b. Return air ducts.

c. Relief ducts.

d. Flexible runouts (field-insulated).

e. Plenums.

f. Duct-mounted coil casings.

g. Coil headers and return bends.

h. Coil casings.

i. Fresh air intake ducts.

j. Filter boxes.

k. Mixing boxes (field-insulated).

l. Supply fans (field-insulated).

m. Site-erected air conditioner casings.

n. Ducts exposed to weather.

o. Combustion air intake ducts.

Insulation for rectangular ducts shall be flexible type where concealed, minimum density 12 kg per cubic meter (3/4 pcf) and rigid type where

exposed, minimum density 48 kg per cubic meter (3 pcf). Insulation for round/oval ducts shall be flexible type, minimum density 12 kg per cubic meter (3/4 pcf) with a factory Type I jacket; or, a semi rigid board, minimum density 48 kg per cubic meter (3 pcf), formed or fabricated to a tight fit, edges beveled and joints tightly butted and staggered, with a factory applied Type I all service jacket. Insulation for exposed ducts shall be provided with either a white, paintable, factory-applied Type I jacket or a vapor retarder jacket coating finish as specified. Fibrous and cellular glass insulation on concealed duct shall be provided with a factory-applied Type I vapor retarder jacket. The total dry film thickness shall be approximately 2.0 mm. Duct insulation shall be continuous through sleeves and prepared openings except fire wall penetrations. Duct insulation terminating at fire dampers, shall be continuous over the damper collar and retaining angle of fire dampers, which are exposed to unconditioned air and which may be prone to condensate formation. Duct insulation and vapor retarder shall cover the collar, neck, and any uninsulated surfaces of diffusers, registers and grills. Vapor retarder materials shall be applied to form a complete unbroken vapor seal over the insulation.

3.3.2.1 Installation on Concealed Duct

a. For rectangular, oval or round ducts, insulation shall be attached by applying Class 2 adhesive around the entire perimeter of the duct in 150 mm wide strips on 300 mm centers.

b. For rectangular and oval ducts, 600 mm (24 inches) and larger insulation shall be additionally secured to bottom of ducts by the use of mechanical fasteners. Fasteners shall be spaced on 450 mm centers and not more than 450 mm from duct corners.

c. For rectangular, oval and round ducts, mechanical fasteners shall be provided on sides of duct risers for all duct sizes. Fasteners shall be spaced on 450 mm centers and not more than 450 mm from duct corners.

d. Insulation shall be impaled on the mechanical fasteners where used and shall be pressed thoroughly into the adhesive. Care shall be taken to ensure vapor retarder jacket joints overlap 50 mm. The insulation shall not be compressed to a thickness less than that specified. Insulation shall be carried over standing seams and trapeze-type duct hangers.

e. Self-locking washers shall be installed where mechanical fasteners are used. The pin shall be trimmed back and bent over.

f. Jacket overlaps shall be secured under the overlap with Class 2 adhesive and stapled on 100 mm centers. Staples and seams shall be coated with a brush coat of vapor retarder coating.

g. Breaks in the jacket material shall be covered with patches of the same material as the vapor retarder. The patches shall extend not less than 50 mm beyond the break or penetration in all directions and shall be secured with Class 2 adhesive and staples. Staples and joints shall be sealed with a brush coat of vapor retarder coating.

h. At jacket penetrations such as hangers, thermometers, and damper operating rods, voids in the insulation shall be filled and the

penetration sealed with a brush coat of vapor retarder coating.

i. Insulation terminations and pin punctures shall be sealed and flashed with a reinforced vapor retarder coating finish. The coating shall overlap the adjoining insulation and uninsulated surface 50 mm. Pin puncture coatings shall extend 50 mm from the puncture in all directions.

j. Where insulation standoff brackets occur, insulation shall be extended under the bracket and the jacket terminated at the bracket.

3.3.2.2 Installation on Exposed Duct Work

a. For rectangular ducts, rigid insulation shall be secured to the duct by mechanical fasteners on all four sides of the duct, spaced not more than 300 mm apart and not more than 75 mm from the edges of the insulation joints. A minimum of two rows of fasteners shall be provided for each side of duct 300 mm and larger. One row shall be provided for each side of duct less than 300 mm.

b. Duct insulation shall be formed with minimum jacket seams. Each piece of rigid insulation shall be fastened to the duct using mechanical fasteners. When the height of projections is less than the insulation thickness, insulation shall be brought up to standing seams, reinforcing, and other vertical projections and shall not be carried over. Vapor retarder jacket shall be continuous across seams, reinforcing, and projections. When height of projections is greater than the insulation thickness, insulation and jacket shall be carried over.

c. Insulation shall be impaled on the fasteners; self-locking washers shall be installed and the pin trimmed and bent over.

d. Joints in the insulation jacket shall be sealed with a 100 mmwide strip of the same material as the vapor retarder jacket. The strip shall be secured with Class 2 adhesive and stapled. Staples and seams shall be sealed with a brush coat of vapor retarder coating.

e. Breaks and ribs or standing seam penetrations in the jacket material shall be covered with a patch of the same material as the jacket. Patches shall extend not less than 50 mm beyond the break or penetration and shall be secured with Class 2 adhesive and stapled. Staples and joints shall be sealed with a brush coat of vapor retarder coating.

f. At jacket penetrations such as hangers, thermometers, and damper operating rods, the voids in the insulation shall be filled and the penetrations sealed with a brush coat of vapor retarder coating.

g. Insulation terminations and pin punctures shall be sealed and flashed with a reinforced vapor retarder coating finish. The coating shall overlap the adjoining insulation and uninsulated surface 50 mm. Pin puncture coatings shall extend 50 mm from the puncture in all directions.

h. Oval and round ducts, flexible type, shall be insulated with factory Type I jacket insulation with minimum density of 12 kg per cubic meter, attached by applying Class 2 adhesive around the entire perimeter of the duct in 150 mm wide stripe on 300 mm centers.

3.3.3 Insulation for Warm Air Duct

The return portion of the VAV system shall be insulated in accordance with the requirements in paragraph INSULATION AND VAPOR RETARDER FOR COLD AIR DUCT.

3.3.4 Duct Test Holes

After duct systems have been tested, adjusted, and balanced, breaks in the insulation and jacket shall be repaired in accordance with the applicable section of this specification for the type of duct insulation to be repaired.

3.4 EQUIPMENT INSULATION INSTALLATION

3.4.1 General

Removable insulation sections shall be provided to cover parts of equipment which must be opened periodically for maintenance including vessel covers, fasteners, flanges and accessories. Equipment insulation shall be omitted on the following:

a. Handholes.

b. Boiler manholes.

c. Cleanouts.

d. ASME stamps.

e. Manufacturer's nameplates.

3.4.2 Insulation for Cold Equipment

Cold equipment below 16 degrees C: Insulation shall be furnished on equipment handling media below 16 degrees C including the following:

a. Pumps.

b. Refrigeration equipment parts that are not factory insulated.

c. Drip pans under chilled equipment.

d. Chilled water pumps.

e. Roof drain bodies.

f. Air handling equipment parts that are not factory insulated.

g. Expansion and air separation tanks.

3.4.2.1 Insulation Type

Insulation shall be suitable for the temperature encountered. Thicknesses shall be as follows:

a. Equipment handling media between 2 and 16 degrees C: 50 mm (2 inch) thick cellular glass, 38 mm (1-1/2 inch) thick flexible cellular, or 25 mm (1 inch) thick phenolic foam.

b. Equipment handling media between minus 18 degrees C and plus 1 degrees C: 90 mm (3-1/2 inch) thick cellular glass, 63.5 mm (2-1/2 inch) flexible cellular, or 38 mm (1-1/2 inch) thick phenolic foam.

c. Equipment handling media between minus 34 degrees C and minus 18 degrees C: 100 mm (4 inch) thick cellular glass 75 mm (3 inch) thick flexible cellular, or 38 mm (1-1/2 inch) thick phenolic foam.

3.4.2.2 Pump Insulation

a. Pumps shall be insulated by forming a box around the pump housing. The box shall be constructed by forming the bottom and sides using joints which do not leave raw ends of insulation exposed. Joints between sides and between sides and bottom shall be joined by adhesive with lap strips for rigid mineral fiber and contact adhesive for flexible cellular insulation. The box shall conform to the requirements of MICA-01 plate No. 49 when using flexible cellular insulation. Joints between top cover and sides shall fit tightly forming a female shiplap joint on the side pieces and a male joint on the top cover, thus making the top cover removable.

b. Exposed insulation corners shall be protected with corner angles.

c. Upon completion of installation of the insulation, including removable sections, two coats of vapor retarder coating shall be applied with a layer of glass cloth embedded between the coats. The total dry thickness of the finish shall be 2.0 mm (1/16 inch). A parting line shall be provided between the box and the removable sections allowing the removable sections to be removed without disturbing the insulation coating. Caulking shall be applied to parting line, between equipment and removable section insulation, and at all penetrations.

3.4.2.3 Other Equipment

a. Insulation shall be formed or fabricated to fit the equipment. To ensure a tight fit on round equipment, edges shall be beveled and joints shall be tightly butted and staggered.

b. Insulation shall be secured in place with bands or wires at intervals as recommended by the manufacturer but not more than 300 mm centers except flexible cellular which shall be adhered. Insulation corners shall be protected under wires and bands with suitable corner angles.

c. Cellular glass and phenolic foam insulation shall be set in a coating of bedding compound, and joints shall be sealed with bedding compound as recommended by the manufacturer. Mineral fiber insulation joints shall be filled with finishing cement.

d. Insulation on heads of heat exchangers shall be removable. Removable section joints shall be fabricated using a male-female shiplap type joint. The entire surface of the removable section shall be finished by applying two coats of vapor retarder coating with a layer of glass cloth embedded between the coats. The total dry thickness of the finish shall be 2.0 mm (1/16 inch).

e. Exposed insulation corners shall be protected with corner angles.

f. Insulation on equipment with ribs shall be applied over 150 x 150 mm (6 x 6 inches) by 12 gauge welded wire fabric which has been cinched in place, or if approved by the Contracting Officer, spot welded to the equipment over the ribs. Insulation shall be secured to the fabric with J-hooks and 50 x 50 mm (2 x 2 inches) washers or shall be securely banded or wired in place on 300 mm centers.

3.4.2.4 Vapor Retarder

Upon completion of installation of insulation, penetrations shall be caulked. Two coats of vapor retarder coating shall be applied over insulation, including removable sections, with a layer of glass cloth embedded between the coats. The total dry thickness of the finish shall be 2.0 mm (1/16 inch). Caulking shall be applied to parting line between equipment and removable section insulation.

3.4.3 Insulation for Hot Equipment

Insulation shall be furnished on equipment handling media above 16 degrees C including the following:

a. Water heaters.

b. Pumps handling media above 54 degrees C.

c. Hot water storage tanks.

d. Air separation tanks.

e. Unjacketed boilers or parts of boilers.

f. Boiler flue gas connection from boiler to stack (if inside).

3.4.3.1 Insulation

Insulation shall be suitable for the temperature encountered. Shell and tube-type heat exchangers shall be insulated for the temperature of the shell medium. Insulation thicknesses shall be as follows:

a. Equipment handling media to 121 degrees C (250 degrees F): 50 mm (2 inch) thick rigid mineral fiber, 50 mm (2 inch) thick flexible mineral fiber, 50 mm (2 inch) thick calcium silicate, 38 mm (1.5 inch) cellular glass, 38 mm (1.5 inch) thick phenolic foam; to 93.3 degrees C (200 degrees F) 25 mm (1.0 inch) Flexible Cellular.

b. Equipment handling media to 204 degrees C (400 degrees F): 75 mm (3 inch) thick rigid mineral fiber, 75 mm (3 inch) thick flexible mineral fiber, 75 mm (3 inch) thick calcium silicate, 75 mm (3

inch) thick cellular glass.

c. Equipment handling media to 316 degrees C (600 degrees F): 127 mm (5 inch) thick rigid mineral fiber, 150 mm (6 inch) thick flexible mineral fiber, 150 mm (6 inch) thick calcium silicate, 150 mm (6 inch) thick cellular glass.

d. Equipment handling media above 316 degrees C (600 degrees F): Insulate with a thickness of material required to limit the external temperature of the insulation to 50 degrees C except that diesel engine exhaust piping and mufflers shall be covered with 150 mm (6 inch) thick material suitable for 650 degrees C (1200 degrees F) service. Heat transfer calculations shall be submitted to substantiate insulation and thickness selection.

3.4.3.2 Insulation of Pumps

Pumps shall be insulated by forming a box around the pump housing. The box shall be constructed by forming the bottom and sides using joints which do not leave raw ends of insulation exposed. Bottom and sides shall be banded to form a rigid housing which does not rest on the pump. Joints between top cover and sides shall fit tightly. The top cover shall have a joint forming a female shiplap joint on the side pieces and a male joint on the top cover, making the top cover removable. Two coats of Class I adhesive shall be applied over insulation, including removable sections, with a layer of glass cloth embedded between the coats. A parting line shall be provided between the box and the removable sections allowing the removable sections to be removed without disturbing the insulation coating. The total dry thickness of the finish shall be 2.0 mm (1/16 inch). Caulking shall be applied to parting line of the removable sections and penetrations.

3.4.3.3 Other Equipment

a. Insulation shall be formed or fabricated to fit the equipment. To ensure a tight fit on round equipment, edges shall be beveled and joints shall be tightly butted and staggered.

b. Insulation shall be secured in place with bands or wires at intervals as recommended by the manufacturer but not greater than 300 mm centers except flexible cellular which shall be adhered. Insulation corners shall be protected under wires and bands with suitable corner angles.

c. On high vibration equipment, cellular glass insulation shall be set in a coating of bedding compound as recommended by the manufacturer, and joints shall be sealed with bedding compound. Mineral fiber joints shall be filled with finishing cement.

d. Exposed insulation corners shall be protected with corner angles.

e. On equipment with ribs, such as boiler flue gas connection, draft fans, and fly ash or soot collectors, insulation shall be applied over 150 x 150 mm (6 x 6 inch) by 12 gauge welded wire fabric which has been cinched in place, or if approved by the Contracting Officer, spot welded to the equipment over the ribs. Insulation shall be secured to the fabric with J-hooks and 50 x 50 mm (2 x 2 inch) washers or shall be securely banded or wired in place on 300 mm (maximum) centers.

g. On equipment handling media above 316 degrees C (600 degrees F), insulation shall be applied in two or more layers with joints staggered.

h. Upon completion of installation of insulation, penetrations shall be caulked. Two coats of Class I adhesive shall be applied over insulation, including removable sections, with a layer of glass cloth embedded between the coats. The total dry thickness of the finish shall be 2.0 mm (1/16 inch). Caulking shall be applied to parting line between equipment and removable section insulation.

3.4.4 Equipment Exposed to Weather

3.4.4.1 Installation

Equipment exposed to weather shall be insulated and finished in accordance with the requirements for ducts exposed to weather in paragraph DUCT INSULATION INSTALLATION.

3.4.4.2 Optional Panels

At the option of the Contractor, prefabricated metal insulation panels may be used in lieu of the insulation and finish previously specified. Thermal performance shall be equal to or better than that specified for field applied insulation. Panels shall be the standard catalog product of a manufacturer of metal insulation panels. Fastenings, flashing, and support system shall conform to published recommendations of the manufacturer for weatherproof installation and shall prevent moisture from entering the insulation. Panels shall be designed to accommodate thermal expansion and to support a 1112 N (250 pound) walking load without permanent deformation or permanent damage to the insulation. Exterior metal cover sheet shall be aluminum and exposed fastenings shall be stainless steel or aluminum.

-- End of Section --

SECTION 15330

WET PIPE SPRINKLER SYSTEM, FIRE PROTECTION

PART 1 GENERAL

1.1 REFERENCES

The publications listed below form a part of this specification to the extent referenced. The publications are referred to in the text by basic designation only.

AMERICAN SOCIETY FOR TESTING AND MATERIALS (ASTM)

ASTM A 47	(1990) Ferritic Malleable Iron Castings
ASTM A 53	(1995a) Pipe, Steel, Black and Hot-Dipped, Zinc-Coated Welded and Seamless
ASTM A 135	(1993) Electric-Resistance-Welded Steel Pipe
ASTM A 183	(1983; R 1990) Carbon Steel Tract Bolts and Nuts
ASTM A 536	(1984; R 1993) Ductile Iron Castings
ASTM A 795	(1995) Black and Hot-Dipped Zinc-Coated (Galvanized) Welded and Seamless Steel Pipe for Fire Protection Use

AMERICAN SOCIETY OF MECHANICAL ENGINEERS (ASME)

ASME B16.1	(1989) Cast Iron Pipe Flanges and Flanged Fittings
ASME B16.3	(1992) Malleable Iron Threaded Fittings
ASME B16.4	(1992) Cast Iron Threaded Fittings
ASME B16.9	(1993) Factory-Made Wrought Steel Buttwelding Fittings
ASME B16.11	(1991) Forged Fittings, Socket-Welding and Threaded
ASME B16.21	(1992) Nonmetallic Flat Gaskets for Pipe Flanges
ASME B18.2.1	(1981; Supple 1991; R 1992) Square and Hex Bolts and Screws (Inch Series)
ASME B18.2.2	(1987; R 1993) Square and Hex Nuts (Inch Series)

AMERICAN SOCIETY OF SANITARY ENGINEERING (ASSE)

ASSE 1015	(1993) Double Check Backflow Prevention Assembly

AMERICAN WATER WORKS ASSOCIATION (AWWA)

AWWA-10062JU	(1992) Standard Methods for the Examination of Water and Wastewater
AWWA B300	(1992) Hypochlorites
AWWA B301	(1992) Liquid Chlorine
AWWA C104	(1990) Cement-Mortar Lining for Ductile-Iron Pipe and Fittings for Water
AWWA C110	(1993) Ductile-Iron and Gray-Iron Fittings, 3 In. Through 48 In. (75 mm through 1200 mm), for Water and Other Liquids
AWWA C111	(1990) Rubber-Gasket Joints for Ductile-Iron Pressure Pipe and Fittings
AWWA C151	(1991) Ductile-Iron Pipe, Centrifugally Cast, for Water or Other Liquids
AWWA C203	(1991) Coal-Tar Protective Coatings and Linings for Steel Water Pipelines - Enamel and Tape - Hot-Applied
AWWA M20	(1973) Manual: Water Chlorination Principles and Practices

FACTORY MUTUAL ENGINEERING AND RESEARCH (FM)

FM P7825	(1995; Supple I; Supple II; Supple III) Approval Guide

MANUFACTURERS STANDARDIZATION SOCIETY OF THE VALVE AND FITTINGS INDUSTRY (MSS)

MSS SP-71	(1990) Cast Iron Swing Check Valves, Flanges and Threaded Ends

NATIONAL FIRE PROTECTION ASSOCIATION (NFPA)

NFPA 13	(1996) Installation of Sprinkler Systems
NFPA 24	(1995) Installation of Private Fire Service Mains and Their Appurtenances
NFPA 1963	(1993) Fire Hose Connections

NATIONAL INSTITUTE FOR CERTIFICATION IN ENGINEERING TECHNOLOGIES (NICET)

NICET 1014	(1995) Program Detail Manual for Certification in the Field of Fire

	Protection Engineering Technology (Field Code 003) Automatic Sprinkler System Layout

UNDERWRITERS LABORATORIES (UL)

UL-01	(1996) Building Materials Directory
UL-04	(1996; Supple) Fire Protection Equipment Directory

1.2 GENERAL REQUIREMENTS

Wet pipe sprinkler system shall be provided in all areas of the building. The sprinkler system shall provide fire sprinkler protection for the entire area. Except as modified herein, the system shall be designed and installed in accordance with NFPA 13. Pipe sizes which are not indicated on drawings shall be determined by hydraulic calculation.

1.2.1 Hydraulic Design

The system shall be hydraulically designed to discharge a minimum density of water over the hydraulically most demanding area as follows: The system shall be hydraulically designed to discharge a minimum density of water over the hydraulically most demanding area as follows: (1) mechanical, electrical, UPS and loading dock - 6.11 L/Min per square meter over a design area of 139 m_2. (2) Library stack areas - 8.15 L/Min/139 m_2 over 139 m_2. (3) Allother areas - 4.1 L/Min/m_2 over 139 m_2. The minimum pipe size for branch lines in gridded systems shall be 32 mm (1-1/4 inch). Hydraulic calculations shall be in accordance with the Area/Density Method of NFPA 13.

1.2.1.1 Hose Demand

An allowance for exterior hose streams of 1893 L/min shall be added to the sprinkler system demand.

1.2.1.2 Basis for Calculations

The design of the system shall be based upon a water supply with a static pressure of 372 kPa, and a flow of 5300 L/min at a residual pressure of 248 kPa. Water supply shall be presumed available at the point of connection to existing. Hydraulic calculations shall be based upon the Hazen-Williams formula with a "C" value of 120 for steel piping, 150 for copper tubing, 140 for new cement-lined ductile-iron piping, and 100 for existing underground piping.

1.2.2 Sprinkler Spacing

Sprinklers shall be uniformly spaced on branch lines. Maximum spacing per sprinkler shall not exceed limits specified in NFPA 13 for the hazard occupancy indicated on the drawings.

1.3 SUBMITTALS

Government approval is required for submittals with a "GA" designation; submittals having an "FIO" designation are for information only. Submittals related to system configuration, hydraulic calculations, and equipment selection, including manufacturer's catalog data, working drawings, connection drawings, control diagrams and certificates shall be

submitted concurrently as a complete package. The package will be reviewed by the U.S. Army Engineer District Fire Protection Engineer. The following shall be submitted in accordance with Section 01330 SUBMITTAL PROCEDURES:

SD-01 Data

Sprinkler System Equipment; GA|ED.

Manufacturer's Catalog Data for each separate piece of equipment proposed for use in the system. Data shall indicate the name of the manufacturer of each item of equipment, with data highlighted to indicate model, size, options, etc. proposed for installation. In addition, a complete equipment list which includes equipment description, model number and quantity shall be provided.

Hydraulic Calculations; GA|ED.

Hydraulic calculations, including a drawing showing hydraulic reference points and pipe segments.

Spare Parts; GA|ED.

Spare parts data shall be included for each different item of material and equipment specified. The data shall include a complete list of parts and supplies, with current unit prices and source of supply, and a list of parts recommended by the manufacturer to be replaced after 1 year and 3 years of service. A list of special tools and test equipment required for maintenance and testing of the products supplied by the Contractor shall be included.

SD-04 Drawings

Sprinkler System Shop Drawings; GA|ED.

Detail drawings conforming to the requirements established for working plans as prescribed in NFPA 13. Drawings shall include plan and elevation views which establish that the equipment will fit the allotted spaces with clearance for installation and maintenance. Each set of drawings shall include the following:

a. Descriptive index of drawings in the submittal with drawings listed in sequence by drawing number. A legend identifying device symbols, nomenclature, and conventions used.

b. Floor plans drawn to a scale not less than 1:100 which clearly show locations of sprinklers, risers, pipe hangers, seismic separation assemblies, sway bracing, inspector's test connections, drains, and other applicable details necessary to clearly describe the proposed arrangement. Each type of fitting used and the locations of bushings, reducing couplings, and welded joints shall be indicated.

c. Actual center-to-center dimensions between sprinklers on branch lines and between branch lines; from end sprinklers to adjacent walls; from walls to branch lines; from sprinkler feed mains, cross-mains and branch lines to finished floor and roof or ceiling. A detail shall show the dimension from the sprinkler and sprinkler deflector to the ceiling in finished areas.

d. Longitudinal and transverse building sections showing typical branch line and cross-main pipe routing as well as elevation of each typical sprinkler above finished floor.

e. Details of each type of riser assembly; pipe hanger; sway bracing for earthquake protection, and restraint of underground water main at point-of-entry into the building, and electrical devices and interconnecting wiring.

As-Built Drawings; GA|ED.

As-built drawings, no later than 14 working days after completion of the Final Tests. The sprinkler system shop drawings shall be updated to reflect as-built conditions after work is completed and shall be on reproducible full-size mylar film.

SD-06 Instructions

Test Procedures; GA|ED.

Proposed test procedures for piping hydrostatic test, testing of alarms, at least 14 days prior to the start of related testing.

SD-07 Schedules

Preliminary Tests; GA|ED.

A schedule of preliminary tests, at least 14 days prior to the proposed start of the tests.

Final Test; GA|ED.

Upon successful completion of tests specified under PRELIMINARY TESTS, written notification shall be given to the Contracting Officer of the date for the final acceptance test. Notification shall be provided at least 14 days prior to the proposed start of the test. Notification shall include a copy of the Contractor's Material & Test Certificates.

SD-08 Statements

Installer Qualifications; GA|ED.

Qualifications of the sprinkler installer.

Submittal Preparer's Qualifications; GA|ED.

The name and documentation of certification of the individual who will prepare the submittals, prior to the submittal of the drawings and hydraulic calculations.

SD-13 Certificates

Contractor's Material & Test Certificates; GA|ED.

Certificates, as specified in NFPA 13, shall be completed and signed by the Contractor's Representative performing required tests for both underground and aboveground piping.

SD-19 Operation and Maintenance Manuals

Sprinkler System; GA|ED.

Manuals shall be in loose-leaf binder format and grouped by technical sections consisting of manufacturer's standard brochures, schematics, printed instructions, general operating procedures, and safety precautions. The manuals shall list routine maintenance procedures possible breakdowns, and repairs, and troubleshooting guide. This shall include procedures and instructions pertaining to frequency of preventive maintenance, inspection, adjustment, lubrication and cleaning necessary to minimize corrective maintenance and repair.

1.4 HYDRAULIC CALCULATIONS

Hydraulic calculations shall be as outlined in NFPA 13 except that calculations shall be performed by computer using software specifically designed for fire protection system design. Software which uses k-factors for typical branch lines is not acceptable. Calculations shall be taken back to the water supply source unless water supply data is otherwise indicated. Calculations shall substantiate that the design area indicated is the hydraulically most demanding. Water supply curves and system requirements shall be plotted on semi-logarithmic graph paper so as to present a summary of the complete hydraulic calculation. A summary sheet listing sprinklers in the design area and their respective hydraulic reference points, elevations, actual discharge pressures and actual flows shall be provided. Elevations of hydraulic reference points (nodes) shall be indicated. Documentation shall identify each pipe individually and the nodes connected thereto. The diameter, length, flow, velocity, friction loss, number and type fittings, total friction loss in the pipe, equivalent pipe length and Hazen-Williams coefficient shall be indicated for each pipe. For gridded systems, calculations shall show peaking of demand area friction loss to verify that the hydraulically most demanding area is being used. Also for gridded systems, a flow diagram indicating the quantity and direction of flows shall be included. A drawing showing hydraulic reference points (nodes) and pipe designations used in the calculations shall be included and shall be independent of shop drawings.

1.5 SUBMITTAL PREPARER'S QUALIFICATIONS

The sprinkler system submittals, including as-built drawings, shall be prepared by an individual who is either a registered professional engineer or who is certified as a Level III Technician by National Institute for Certification in Engineering Technologies (NICET) in the Automatic Sprinkler System Layout subfield of Fire Protection Engineering Technology in accordance with NICET 1014.

1.6 INSTALLER QUALIFICATIONS

The installer shall be experienced and regularly engaged in the installation of the type and complexity of system included in this project. A statement prior to submittal of any other data or drawings, that the proposed sprinkler system installer is regularly engaged in the installation of the type and complexity of system included in this project shall be provided. In addition, data identifying the location of at least three systems recently installed by the proposed installer which are comparable to the system specified shall be submitted. Contractor shall certify that each system has performed satisfactorily, in the manner intended, for a period of not less than 6 months.

1.7 REGULATORY REQUIREMENTS

Compliance with referenced NFPA standards is mandatory. This includes advisory provisions listed in the appendices of such standards, as though the word "shall" had been substituted for the word "should" wherever it appears. Applicable material and installation standards referenced in Appendix A of NFPA 13 and NFPA 24 shall be considered mandatory the same as if such referenced standards were specifically listed in this specification. In the event of a conflict between specific provisions of this specification and applicable NFPA standards, this specification shall govern. All requirements that exceed the minimum requirements of NFPA 13 shall be incorporated into the design. Reference to "authority having jurisdiction" shall be interpreted to mean the Contracting Officer.

1.8 DELIVERY AND STORAGE

Equipment placed in storage shall be stored with protection from the weather, humidity and temperature variations, dirt and dust or other contaminants.

PART 2 PRODUCTS

2.1 GENERAL EQUIPMENT REQUIREMENTS

2.1.1 Standard Products

Materials and equipment shall be standard products of a manufacturer regularly engaged in the manufacture of such products and shall essentially duplicate items that have been in satisfactory use for at least 2 years prior to bid opening.

2.1.2 Requirements for Fire Protection Service

Equipment and materials shall have been tested by Underwriters Laboratories, Inc. and listed in UL-04 or approved by Factory Mutual and listed in FM P7825. Where the terms "listed" or "approved" appear in this specification, such shall mean listed in UL-04 or FM P7825.

2.1.3 Nameplates

Major components of equipment shall have the manufacturer's name, address, type or style, model or serial number, and catalog number on a plate permanently affixed to the item of equipment.

2.2 UNDERGROUND PIPING SYSTEMS

2.2.1 Pipe

Piping from a point 150 mm above the floor to a point 1500 mm outside the building wall shall be ductile iron with a rated working pressure of 1207 kPa (175 psi) conforming to AWWA C151, with cement mortar lining conforming to AWWA C104. Piping more than 1500 mm outside the building walls shall comply with Section 02660 WATER LINES.

2.2.2 Fittings and Gaskets

Fittings shall be ductile iron conforming to AWWA C110. Gaskets shall be suitable in design and size for the pipe with which such gaskets are to be used. Gaskets for ductile iron pipe joints shall conform to AWWA C111.

2.3 ABOVEGROUND PIPING SYSTEMS

Aboveground piping shall be steel.

2.3.1 Steel Piping System

2.3.1.1 Steel Pipe

Except as modified herein, steel pipe shall be black as permitted by NFPA 13 and shall conform to applicable provisions of ASTM A 795, ASTM A 53, or ASTM A 135. Pipe in which threads or grooves are cut shall be Schedule 40 or shall be listed by Underwriters' Laboratories to have a corrosion resistance ratio (CRR) of 1.0 or greater after threads or grooves are cut. Pipe shall be marked with the name of the manufacturer, kind of pipe, and ASTM designation.

2.3.1.2 Fittings for Non-Grooved Steel Pipe

Fittings shall be cast iron conforming to ASME B16.4, steel conforming to ASME B16.9 or ASME B16.11, or malleable iron conforming to ASME B16.3. Steel press fittings shall be approved for fire protection systems. Galvanized fittings shall be used for piping systems or portions of piping systems utilizing galvanized piping. Fittings into which sprinklers, drop nipples or riser nipples (sprigs) are screwed shall be threaded type. Plain-end fittings with mechanical couplings, fittings which use steel gripping devices to bite into the pipe and segmented welded fittings shall not be used.

2.3.1.3 Grooved Mechanical Joints and Fittings

Joints and fittings shall be designed for not less than 1200 kPa (175 psi) service and shall be the product of the same manufacturer. Fitting and coupling houses shall be malleable iron conforming to ASTM A 47, Grade 32510; ductile iron conforming to ASTM A 536, Grade 65-45-12. Gasket shall be the flush type that fills the entire cavity between the fitting and the pipe. Nuts and bolts shall be heat-treated steel conforming to ASTM A 183 and shall be cadmium plated or zinc electroplated.

2.3.1.4 Flanges

Flanges shall conform to NFPA 13 and ASME B16.1. Gaskets shall be non-asbestos compressed material in accordance with ASME B16.21, 1.6 mm (1/16 inch) thick, and full face or self-centering flat ring type. Bolts shall be squarehead conforming to ASME B18.2.1 and nuts shall be hexagon type conforming to ASME B18.2.2.

2.3.2 Pipe Hangers

Hangers shall be listed in UL-04 or FM P7825 and of the type suitable for the application, construction, and pipe type and sized involved.

2.3.3 Valves

2.3.3.1 Control Valve and Gate Valve

Manually operated sprinkler control valve and gate valve shall be outside stem and yoke (OS&Y) type and shall be listed in UL-01 or FM P7825.

2.3.3.2 Check Valve

Check valve 50 mm (2 inches) and larger shall be listed in UL-01 or FM P7825. Check valves 100 mm (4 inches) and larger shall be of the swing type with flanged cast iron body and flanged inspection plates, shall have a clear waterway and shall meet the requirements of MSS SP-71, for Type 3 or 4.

2.4 ALARM INITIATING AND SUPERVISORY DEVICES

2.4.1 Sprinkler Waterflow Indicator Switch, Vane Type

Switch shall be vane type with a pipe saddle and cast aluminum housing. The electro-mechanical device shall include a flexible, low-density polyethylene paddle conforming to the inside diameter of the fire protection pipe. The device shall sense water movements and be capable of detecting a sustained flow of 38 L/min (10 gpm) or greater. The device shall contain a retard device adjustable from 0 to 90 seconds to reduce the possibility of false alarms caused by transient flow surges. The switch shall include two SPDT (Form C) contacts, and shall be equipped with a silicone rubber gasket to assure positive water seal and a dustproof cover and gasket to seal the mechanism from dirt and moisture.

2.4.2 Valve Supervisory (Tamper) Switch

Switch shall be suitable for mounting to the type of control valve to be supervised open. The switch shall be tamper resistant and contain one set of SPDT (Form C) contacts arranged to transfer upon removal of the housing cover or closure of the valve of more than two rotations of the valve stem.

2.5 FIRE DEPARTMENT CONNECTION

Fire department connection shall be flush type with cast brass body, matching wall escutcheon lettered "Auto Spkr" with a polished brass finish. The connection shall have two inlets with individual self-closing clappers, caps with drip drains and chains. Female inlets shall have 65 mm (2-1/2 inch) diameter American National Fire Hose Connection Screw Threads (NH) per NFPA 1963.

2.6 SPRINKLERS

Sprinklers shall be used in accordance with their listed spacing limitations. Temperature classification shall be ordinary as indicated. Sprinklers in high heat areas including attic spaces or in close proximity to unit heaters shall have temperature classification in accordance with NFPA 13.

2.6.1 Upright Sprinkler

Upright sprinkler shall be chrome-plated quick-response type and shall have a nominal 12.7 mm (1/2 inch) or 13.5 mm (17/32 inch) orifice.

2.6.2 Pendent Sprinkler

Pendent sprinkler shall be the glass bulb type, semi-recessed, quick-response type with nominal 12.7 mm (1/2 inch) or 13.5 mm (17/32 inch) orifice. Pendent sprinklers shall have a polished chrome finish.

2.6.3 Sidewall Sprinkler

Sidewall sprinkler shall have a nominal 12.7 mm (1/2 inch) orifice. Sidewall sprinkler shall have a brass and polished chrome finish. Sidewall sprinkler shall be the quick-response type.

2.7 DISINFECTING MATERIALS

2.7.1 Liquid Chlorine

Liquid chlorine shall conform to AWWA B301.

2.7.2 Hypochlorites

Calcium hypochlorite and sodium hypochlorite shall conform to AWWA B300.

2.8 ACCESSORIES

2.8.1 Sprinkler Cabinet

Spare sprinklers shall be provided in accordance with NFPA 13 and shall be packed in a suitable metal or plastic cabinet. Spare sprinklers shall be representative of, and in proportion to, the number of each type and temperature rating of the sprinklers installed. At least one wrench of each type required shall be provided.

2.8.2 Pendent Sprinkler Escutcheon

Escutcheon shall be one-piece metallic type with a depth of less than 20 mm and suitable for installation on pendent sprinklers. The escutcheon shall have a factory finish that matches the pendent sprinkler heads.

2.8.3 Pipe Escutcheon

Escutcheon shall be polished chromium-plated zinc alloy, or polished chromium-plated copper alloy. Escutcheons shall be either one-piece or split-pattern, held in place by internal spring tension or set screw.

2.8.4 Sprinkler Guard

Guard shall be a steel wire cage designed to encase the sprinkler and protect it from mechanical damage. Guards shall be provided on sprinklers located beneath ducts in the mechanical room.

2.8.5 Identification Sign

Valve identification sign shall be minimum 150 mm wide x 50 mm high with enamel baked finish on minimum 1.214 mm (18 gauge) steel or 0.6 mm (0.024 inch) aluminum with red letters on a white background or white letters on red background. Wording of sign shall include, but not be limited to "main drain," "auxiliary drain," "inspector's test," "alarm test," "alarm line," and similar wording as required to identify operational components.

2.9 DOUBLE-CHECK VALVE BACKFLOW PREVENTION ASSEMBLY

Double-check backflow prevention assembly shall comply with ASSE 1015. The assembly shall have a bronze, cast-iron or stainless steel body with flanged ends. The assembly shall include OS&Y shutoff valves on the inlet and outlet, 2-positive-seating check valve for continuous pressure application, and four test cocks. Assemblies shall be rated for working

pressure of 1207 kPa (175 psi). The maximum pressure loss shall be 40 kPa at a flow rate equal to the sprinkler water demand, at the location of the assembly.

PART 3 EXECUTION

3.1 INSTALLATION REQUIREMENTS

The installation shall be in accordance with the applicable provisions of NFPA 13, NFPA 24 and publications referenced therein.

3.2 ABOVEGROUND PIPING INSTALLATION

Piping shall be run straight and bear evenly on hangers and supports.

3.2.1 Protection of Piping Against Earthquake Damage

The system piping shall be protected against damage from earthquakes. Seismic protection of the piping system shall be provided in accordance with NFPA 13 and Appendix A, with the exception that the "Earthquake Zones" map of Appendix A shall not apply to this project. Seismic protection shall include flexible couplings, sway bracing, seismic separation assemblies where piping crosses building seismic separation joints, and other features as required in NFPA 13 for protection of piping against damage from earthquakes. Branch lines shall be equipped with sway braces at the end sprinkler head and at intervals not exceeding 9 m.

3.2.2 Piping in Exposed Areas

Exposed piping shall be installed so as not to diminish exit access widths, corridors or equipment access. Exposed horizontal piping, including drain piping, shall be installed to provide maximum headroom.

3.2.3 Piping in Finished Areas

In areas with suspended or dropped ceilings and in areas with concealed spaces above the ceiling, piping shall be concealed above ceilings. Piping shall be inspected, tested and approved before being concealed. Risers and similar vertical runs of piping in finished areas shall be concealed.

3.2.4 Pendent Sprinklers

Drop nipples to pendent sprinklers shall consist of minimum 25 mm (1 inch) pipe with a reducing coupling into which the sprinkler shall be threaded. Hangers shall be provided on arm-overs to drop nipples supplying pendent sprinklers when the arm-over exceeds 300 mm. Where sprinklers are installed below suspended or dropped ceilings, drop nipples shall be cut such that sprinkler ceiling plates or escutcheons are of a uniform depth throughout the finished space. The outlet of the reducing coupling shall not extend more than 25 mm below the underside of the ceiling. On pendent sprinklers installed below suspended or dropped ceilings, the distance from the sprinkler deflector to the underside of the ceiling shall not exceed 100 mm. Recessed pendent sprinklers shall be installed such that the distance from the sprinkler deflector to the underside of the ceiling shall not exceed the manufacturer's listed range and shall be of uniform depth throughout the finished area.

3.2.4.1 Pendent Sprinkler Locations

Pendent sprinklers in suspended ceilings shall be a minimum of 150 mm from ceiling grid.

3.2.5 Upright Sprinklers

Riser nipples or "sprigs" to upright sprinklers shall contain no fittings between the branch line tee and the reducing coupling at the sprinkler. Riser nipples exceeding 750 mm in length shall be individually supported.

3.2.6 Pipe Joints

Pipe joints shall conform to NFPA 13, except as modified herein. Not more than four threads shall show after joint is made up. Welded joints will be permitted, only if welding operations are performed as required by NFPA 13 at the Contractor's fabrication shop, not at the project construction site. Flanged joints shall be provided where indicated or required by NFPA 13. Grooved pipe and fittings shall be prepared in accordance with the manufacturer's latest published specification according to pipe material, wall thickness and size. Grooved couplings and fittings shall be from the same manufacturer.

3.2.7 Reducers

Reductions in pipe sizes shall be made with one-piece tapered reducing fittings. The use of grooved-end or rubber-gasketed reducing couplings will not be permitted. When standard fittings of the required size are not manufactured, single bushings of the face type will be permitted. Where used, face bushings shall be installed with the outer face flush with the face of the fitting opening being reduced. Bushings shall not be used in elbow fittings, in more than one outlet of a tee, in more than two outlets of a cross, or where the reduction in size is less than 15 mm (1/2 inch).

3.2.8 Pipe Penetrations

Cutting structural members for passage of pipes or for pipe-hanger fastenings will not be permitted. Pipes that must penetrate concrete or masonry walls or concrete floors shall be core-drilled and provided with pipe sleeves. Each sleeve shall be Schedule 40 galvanized steel, ductile iron or cast iron pipe and shall extend through its respective wall or floor and be cut flush with each wall surface. Sleeves shall provide required clearance between the pipe and the sleeve per NFPA 13. The space between the sleeve and the pipe shall be firmly packed with mineral wool insulation. Where pipes pass through fire walls, fire partitions, or floors, a fire seal shall be placed between the pipe and sleeve in accordance with Section 07270 FIRESTOPPING. In penetrations which are not fire-rated or not a floor penetration, the space between the sleeve and the pipe shall be sealed at both ends with plastic waterproof cement which will dry to a firm but pliable mass or with a mechanically adjustable segmented elastomer seal.

3.2.9 Escutcheons

Escutcheons shall be provided for pipe penetration of ceilings and walls. Escutcheons shall be securely fastened to the pipe at surfaces through which piping passes.

3.2.10 Inspector's Test Connection

Unless otherwise indicated, test connection shall consist of 25 mm (1 inch)

pipe connected to the remote branch line; a test valve located approximately 2 meters above the floor; a smooth bore brass outlet equivalent to the smallest orifice sprinkler used in the system; and a painted metal identification sign affixed to the valve with the words "Inspector's Test." The discharge orifice shall be located outside the building wall directed so as not to cause damage to adjacent construction or landscaping during full flow discharge.

3.2.11 Drains

Main drain piping shall be provided to discharge at a safe point outside the building. Auxiliary drains shall be provided as required by NFPA 13 except that drain valves shall be used where drain plugs are otherwise permitted. Where branch lines terminate at low points and form trapped sections, such branch lines shall be manifolded to a common drain line.

3.2.12 Installation of Fire Department Connection

Connection shall be mounted on the exterior wall approximately 900 mm above finished grade as shown. The piping between the connection and the check valve shall be provided with an automatic drip in accordance with NFPA 13 and arranged to drain to the outside.

3.2.13 Identification Signs

Signs shall be affixed to each control valve, inspector test valve, main drain, auxiliary drain, test valve, and similar valves as appropriate or as required by NFPA 13. Hydraulic design data nameplates shall be permanently affixed to each sprinkler riser as specified in NFPA 13.

3.3 UNDERGROUND PIPING INSTALLATION

The fire protection water main shall be laid, and joints anchored, in accordance with NFPA 24. Minimum depth of cover shall be 900 mm. The supply line shall terminate inside the building with a flanged piece, the bottom of which shall be set not less than 150 mm above the finished floor. A blind flange shall be installed temporarily on top of the flanged piece to prevent the entrance of foreign matter into the supply line. A concrete thrust block shall be provided at the elbow where the pipe turns up toward the floor. In addition, joints shall be anchored in accordance with NFPA 24 using pipe clamps and steel rods from the elbow to the flange above the floor and from the elbow to a pipe clamp in the horizontal run of pipe. Buried steel components shall be provided with a corrosion protective coating in accordance with AWWA C203. Piping more than 1500 mm outside the building walls shall meet the requirements of Section 02660 WATER LINES.

3.4 EARTHWORK

Earthwork shall be performed in accordance with applicable provisions of Section 02221 EXCAVATION, FILLING AND BACKFILLING FOR BUILDINGS.

3.5 ELECTRICAL WORK

Alarm signal wiring connected to the building fire alarm control system shall be in accordance with Section 16721 FIRE DETECTION AND ALARM SYSTEM.

3.6 STERILIZATION

After system components have been installed and pressure tested, each portion of the completed system shall be sterilized. After pressure tests have been made, the portion to be sterilized shall be thoroughly flushed with water until all entrained dirt and other foreign materials have been removed before introducing chlorinating material. The chlorinating material shall be hypochlorites or liquid chlorine. Water chlorination procedure shall be in accordance with AWWA M20. The chlorinating material shall be fed into the sprinkler piping at a constant rate of 50 parts per million (ppm). A properly adjusted hypochlorite solution injected into the system with a hypochlorinator, or liquid chlorine injected into the system through a solution-fed chlorinator and booster pump, shall be used. Chlorination application shall continue until the entire system is filled. The water shall remain in the system for a minimum of 24 hours. Each valve in the system shall be opened and closed several times to ensure its proper disinfection. Following the 24-hour period, no less than 25 ppm chlorine residual shall remain in the system. The system shall be then flushed with clean water until the residual chlorine is reduced to less than one part per million. Samples of water in properly sterilized containers for bacterial examination will be taken from several system locations which are approved by the Contracting Officer. Samples shall be tested for total coliform organisms (coliform bacteria, fecal coliform, streptococcal, and other bacteria) in accordance with AWWA-10062JU. The testing method shall be either the multiple-tube fermentation technique or the membrane-filter technique. The sterilization shall be repeated until tests indicate the absence of coliform organisms (zero mean coliform density per 100 milliliters) in the samples for at least 2 full days. The system will not be accepted until satisfactory bacteriological results have been obtained.

3.7 FIELD PAINTING AND FINISHING

Field painting and finishing are specified in Section 09900 PAINTING, GENERAL.

3.8 PRELIMINARY TESTS

The system, including the underground water mains, and the aboveground piping and system components, shall be tested to assure that equipment and components function as intended. The underground and aboveground interior piping systems and attached appurtenances subjected to system working pressure shall be tested in accordance with NFPA 13 and NFPA 24. Upon completion of specified tests, the Contractor shall complete certificates as specified in paragraph SUBMITTALS.

3.8.1 Underground Piping

3.8.1.1 Flushing

Underground piping shall be flushed in accordance with NFPA 24. This includes the requirement to flush the lead-in connection to the fire protection system at a flow rate not less that the calculated maximum water demand rate of the system.

3.8.1.2 Hydrostatic Testing

New underground piping shall be hydrostatically tested in accordance with NFPA 24. The allowable leakage shall be measured at the specified test pressure by pumping from a calibrated container. The amount of leakage at the joints shall not exceed 1.89 liters (2 quarts) per hour per 100 gaskets or joints, regardless of pipe diameter.

3.8.2 Aboveground Piping

3.8.2.1 Hydrostatic Testing

Aboveground piping shall be hydrostatically tested in accordance with NFPA 13 at not less than 1400 kPa or 350 kPa in excess of maximum system operating pressure and shall maintain that pressure without loss for 2 hours. There shall be no drop in gauge pressure or visible leakage when the system is subjected to the hydrostatic test. The test pressure shall be read from a gauge located at the low elevation point of the system or portion being tested.

3.8.3 Testing of Alarm Devices

Each alarm switch shall be tested by flowing water through the inspector's test connection. Each water-operated alarm devices shall be tested to verify proper operation.

3.8.4 Main Drain Flow Test

Following flushing of the underground piping, a main drain test shall be made to verify the adequacy of the water supply. Static and residual pressures shall be recorded on the certificate specified in paragraph SUBMITTALS. In addition, a main drain test shall be conducted each time after a main control valve is shut and opened.

3.9 FINAL ACCEPTANCE TEST

A technician employed by the installing Contractor shall be present for the final tests and shall provide a complete demonstration of the operation of the system. This shall include operation of control valves and flowing of inspector's test connections to verify operation of associated waterflow alarm switches. After operation of control valves has been completed, the main drain test shall be repeated to assure that control valves are in the open position. In addition, the representative shall have available copies of as-built drawings and certificates of tests previously conducted. The installation shall not be considered accepted until identified discrepancies have been corrected and test documentation is properly completed and received. Final inspections and acceptance tests shall be witnessed by the U.S. Army Engineering District Fire Protection Engineer. The Contractor must provide at least two weeks notice to the Contracting Officer to schedule Final Acceptance Tests.

-- End of Section --

SECTION 15400

PLUMBING, GENERAL PURPOSE

PART 1 GENERAL

1.1 REFERENCES

The publications listed below form a part of this specification to the extent referenced. The publications are referred to in the text by basic designation only.

AIR CONDITIONING AND REFRIGERATION INSTITUTE (ARI)

ARI 700	(1995) Specifications for Fluorocarbon and Other Refrigerants
ARI 1010	(1994) Self-Contained, Mechanically-Refrigerated Drinking-Water Coolers

AMERICAN NATIONAL STANDARDS INSTITUTE (ANSI)

ANSI Z21.22	(1986; Z21.22a) Relief Valves and Automatic Gas Shutoff Devices for Hot Water Supply Systems

AMERICAN SOCIETY FOR TESTING AND MATERIALS (ASTM)

ASTM A 47	(1990) Ferritic Malleable Iron Castings
ASTM A 53	(1996) Pipe, Steel, Black and Hot-Dipped, Zinc-Coated Welded and Seamless
ASTM A 74	(1996) Cast Iron Soil Pipe and Fittings
ASTM A 105	(1996) Forgings, Carbon Steel, for Piping Components
ASTM A 183	(1983; R 1990) Carbon Steel Track Bolts and Nuts
ASTM A 193	(1996) Alloy-Steel and Stainless Steel Bolting Materials for High-Temperature Service
ASTM A 515	(1992) Pressure Vessel Plates, Carbon Steel, for Intermediate- and Higher-Temperature Service
ASTM A 516	(1990) Pressure Vessel Plates, Carbon Steel, for Moderate- and Lower-Temperature Service
ASTM A 518	(1992) Corrosion-Resistant High-Silicon Iron Castings

ASTM A 536	(1984; R 1993) Ductile Iron Castings
ASTM A 733	(1993) Welded and Seamless Carbon Steel and Austenitic Stainless Steel Pipe Nipples
ASTM A 888	(1994) Hubless Cast Iron Soil Pipe and Fittings for Sanitary and Storm Drain, Waste, and Vent Piping Applications
ASTM B 32	(1995b) Solder Metal
ASTM B 42	(1993) Seamless Copper Pipe, Standard Sizes
ASTM B 43	(1994) Seamless Red Brass Pipe, Standard Sizes
ASTM B 75	(1993) Seamless Copper Tube
ASTM B 88	(1996) Seamless Copper Water Tube
ASTM B 152	(1994) Copper Sheet, Strip, Plate, and Rolled Bar
ASTM B 306	(1996) Copper Drainage Tube (DWV)
ASTM B 370	(1992) Copper Sheet and Strip for Building Construction
ASTM B 584	(1996) Copper Alloy Sand Castings for General Applications
ASTM B 641	(1993) Seamless and Welded Copper Distribution Tube (Type D)
ASTM B 813	(1993) Liquid and Paste Fluxes for Soldering Applications of Copper and Copper Alloy Tube
ASTM B 828	(1992) Making Capillary Joints by Soldering of Copper and Copper-Alloy Tube and Fittings
ASTM C 564	(1995) Rubber Gaskets for Cast Iron Soil Pipe and Fittings
ASTM C 920	(1994) Elastomeric Joint Sealants
ASTM D 1785	(1994) Poly(Vinyl Chloride) (PVC) Plastic Pipe, Schedules 40, 80, and 120
ASTM D 2000	(1996) Rubber Products in Automotive Applications
ASTM D 2235	(1993a) Solvent Cement for Acrylonitrile-Butadiene-Styrene (ABS) Plastic Pipe and Fittings
ASTM D 2239	(1994) Polyethylene (PE) Plastic Pipe

	(SIDR-PR) Based on Controlled Inside Diameter
ASTM D 2241	(1994) Poly(Vinyl Chloride) (PVC) Pressure-Rated Pipe (SDR Series)
ASTM D 2447	(1993) Polyethylene (PE) Plastic Pipe, Schedules 40 and 80, Based on Outside Diameter
ASTM D 2464	(1994) Threaded Poly(Vinyl Chloride) (PVC) Plastic Pipe Fittings, Schedule 80
ASTM D 2466	(1994a) Poly(Vinyl Chloride) (PVC) Plastic Pipe Fittings, Schedule 40
ASTM D 2467	(1994) Socket-Type Poly(Vinyl Chloride) (PVC) Plastic Pipe Fittings, Schedule 80
ASTM D 2564	(1993) Solvent Cements for Poly(Vinyl Chloride) (PVC) Plastic Piping Systems
ASTM D 2661	(1995) Acrylonitrile-Butadiene-Styrene (ABS) Schedule 40 Plastic Drain, Waste, and Vent Pipe and Fittings
ASTM D 2665	(1995) Poly(Vinyl Chloride) (PVC) Plastic Drain, Waste, and Vent Pipe and Fittings
ASTM D 2672	(1993; R 1995) Joints for IPS PVC Pipe Using Solvent Cement
ASTM D 2683	(1993) Socket-Type Polyethylene Fittings for Outside Diameter-Controlled Polyethylene Pipe and Tubing
ASTM D 2737	(1993) Polyethylene (PE) Plastic Tubing
ASTM D 2822	(1991) Asphalt Roof Cement
ASTM D 2846	(1995a) Chlorinated Poly(Vinyl Chloride) (CPVC) Plastic Hot- and Cold-Water Distribution Systems
ASTM D 2855	(1993) Making Solvent-Cemented Joints with Poly(Vinyl Chloride) (PVC) Pipe and Fittings
ASTM D 2996	(1995) Filament-Wound "Fiberglass" (Glass-Fiber-Reinforced Thermosetting-Resin) Pipe
ASTM D 3035	(1993) Polyethylene (PE) Plastic Pipe (DR-PR) Based on Controlled Outside Diameter
ASTM D 3122	(1993) Solvent Cements for Styrene-Rubber (SR) Plastic Pipe and Fittings

ASTM D 3138	(1993) Solvent Cements for Transition Joints Between Acrylonitrile-Butadiene-Styrene (ABS) and Poly(Vinyl Chloride) (PVC) Non-Pressure Piping Components
ASTM D 3139	(1989; R 1995) Joints for Plastic Pressure Pipes Using Flexible Elastomeric Seals
ASTM D 3212	(1992) Joints for Drain and Sewer Plastic Pipes Using Flexible Elastomeric Seals
ASTM D 3261	(1993) Butt Heat Fusion Polyethylene (PE) Plastic Fittings for Polyethylene (PE) Plastic Pipe and Tubing
ASTM D 3308	(1991a) PTFE Resin Skived Tape
ASTM D 3311	(1994) Drain, Waste, and Vent (DWV) Plastic Fittings Patterns
ASTM E 1	(1995) ASTM Thermometers
ASTM F 409	(1995) Thermoplastic Accessible and Replaceable Plastic Tube and Tubular Fittings
ASTM F 437	(1993) Threaded Chlorinated Poly(Vinyl Chloride) (CPVC) Plastic Pipe Fittings, Schedule 80
ASTM F 438	(1993) Socket-Type Chlorinated Poly(Vinyl Chloride) (CPVC) Plastic Pipe Fittings, Schedule 40
ASTM F 439	(1993a) Socket-Type Chlorinated Poly(Vinyl Chloride) (CPVC) Plastic Pipe Fittings, Schedule 80
ASTM F 441	(1995) Chlorinated Poly(Vinyl Chloride) (CPVC) Plastic Pipe, Schedules 40 and 80
ASTM F 442	(1994) Chlorinated Poly(Vinyl Chloride) (CPVC) Plastic Pipe (SDR-PR)
ASTM F 477	(1995) Elastomeric Seals (Gaskets) for Joining Plastic Pipe
ASTM F 493	(1993a) Solvent Cements for Chlorinated Poly(Vinyl Chloride) (CPVC) Plastic Pipe and Fittings
ASTM F 628	(1995) Acrylonitrile-Butadiene-Styrene (ABS) Schedule 40 Plastic Drain, Waste, and Vent Pipe with a Cellular Core
ASTM F 891	(1993a) Coextruded Poly(Vinyl Chloride) (PVC) Plastic Pipe with a Cellular Core

AMERICAN SOCIETY OF HEATING, REFRIGERATING AND AIR-CONDITIONING ENGINEERS (ASHRAE)

ASHRAE 34	(1992; Addenda a-j) Number Designation and Safety Classification of Refrigerants
ASHRAE 90.1	(1989; 90.1b; 90.1c; 90.1d; 90.1e; 90.1g; 90.1i) Energy Efficient Design of New Buildings Except Low-Rise Residential Buildings

AMERICAN SOCIETY OF MECHANICAL ENGINEERS (ASME)

ASME A112.1.2	(1991) Air Gaps in Plumbing Systems
ASME A112.6.1M	(1988) Supports for Off-the-Floor Plumbing Fixtures for Public Use
ASME A112.19.1M	(1994) Enameled Cast Iron Plumbing Fixtures
ASME A112.19.2M	(1995; Errata) Vitreous China Plumbing Fixtures
ASME A112.19.3M	(1987; R 1996) Stainless Steel Plumbing fixtures (Designed for Residential Use)
ASME A112.21.1M	(1991) Floor Drains
ASME A112.21.2M	(1983) Roof Drains
ASME A112.36.2M	(1991) Cleanouts
ASME B1.20.1	(1983; R 1992) Pipe Threads, General Purpose (Inch)
ASME B16.3	(1992) Malleable Iron Threaded Fittings
ASME B16.4	(1992) Gray Iron Threaded Fittings
ASME B16.5	(1988; Errata Oct 88; B16.5a) Pipe Flanges and Flanged Fittings
ASME B16.12	(1991) Cast Iron Threaded Drainage Fittings
ASME B16.15	(1985; R 1994) Cast Bronze Threaded Fittings Classes 125 and 250
ASME B16.18	(1984; R 1994) Cast Copper Alloy Solder Joint Pressure Fittings
ASME B16.21	(1992) Nonmetallic Flat Gaskets for Pipe Flanges
ASME B16.22	(1995) Wrought Copper and Copper Alloy Solder Joint Pressure Fittings
ASME B16.23	(1992; Errata Jan 1994) Cast Copper Alloy Solder Joint Drainage Fittings - DWV

ASME B16.24	(1991; Errata) Cast Copper Alloy Pipe Flanges, Class 150, 300, 400, 600, 900, 1500 and 2500, and Flanged Fittings, Class 150 and 300
ASME B16.29	(1994) Wrought Copper and Wrought Copper Alloy Solder Joint Drainage Fittings - DWV
ASME B16.34	(1988) Valves - Flanged, Threaded, and Welding End
ASME B16.39	(1986; R 1994) Malleable Iron Threaded Pipe Unions Classes 150, 250, and 300
ASME B31.1	(1995) Power Piping
ASME B31.5	(1992; B31.5a) Refrigeration Piping
ASME B40.1	(1991) Gauges - Pressure Indicating Dial Type - Elastic Element
ASME CSD-1	(1995) Controls and Safety Devices for Automatically Fired Boilers

AMERICAN SOCIETY OF SANITARY ENGINEERING (ASSE)

ASSE 1001	(1990) Pipe Applied Atmospheric Type Vacuum Breakers
ASSE 1005	(1993) Water Heater Drain Valves - 3/4-Inch Iron Pipe Size
ASSE 1011	(1995) Hose Connection Vacuum Breakers
ASSE 1012	(1995) Backflow Preventers with Intermediate Atmospheric Vent
ASSE 1013	(1971; Rev thru Oct 1993) Reduced Pressure Principle Backflow Preventers
ASSE 1037	(1986; Rev thru Mar 1990) Pressurized Flushing Devices (Flushometers) for Plumbing Fixtures/F

AMERICAN WATER WORKS ASSOCIATION (AWWA)

AWWA-01	(1995) Standard Methods for the Examination of Water and Wastewater
AWWA B300	(1992) Hypochlorites
AWWA B301	(1992) Liquid Chlorine
AWWA C203	(1991) Coal-Tar Protective Coatings and Linings for Steel Water Pipelines - Enamel and Tape - Hot-Applied
AWWA C606	(1987) Grooved and Shouldered Joints

AWWA C700	(1995) Cold-Water Meters - Displacement Type, Bronze Main Case
AWWA M20	(1973) Manual: Water Chlorination Principles and Practices

AMERICAN WELDING SOCIETY (AWS)

AWS A5.8	(1992) Filler Metals for Brazing and Braze Welding
AWS B2.2	(1991) Brazing Procedure and Performance Qualification

CAST IRON SOIL PIPE INSTITUTE (CISPI)

CISPI 301	(1995) Hubless Cast Iron Soil Pipe and Fittings for Sanitary and Storm Drain, Waste, and Vent Piping Applications
CISPI HSN-85	(1985) Neoprene Rubber Gaskets for Hub and Spigot Cast Iron Soil Pipe and Fittings

CODE OF FEDERAL REGULATIONS (CFR)

10 CFR 430	Energy Conservation Program for Consumer Products

COMMERCIAL ITEM DESCRIPTIONS (CID)

CID A-A-238	(Rev B) Seat, Water Closet

COPPER DEVELOPMENT ASSOCIATION (CDA)

CDA-02	(1995) Copper Tube Handbook

COUNCIL OF AMERICAN BUILDING OFFICIALS (CABO)

CABO A117.1	(1992; Errata Jun 1993) Accessible and Usable Buildings and Facilities

FOUNDATION FOR CROSS-CONNECTION CONTROL AND HYDRAULIC RESEARCH (FCCHR)

FCCCHR-01	(1993) Manual of Cross-Connection Control

MANUFACTURERS STANDARDIZATION SOCIETY OF THE VALVE AND FITTINGS INDUSTRY (MSS)

MSS SP-25	(1993) Standard Marking System for Valves, Fittings, Flanges and Unions
MSS SP-44	(1996) Steel Pipe Line Flanges
MSS SP-58	(1993) Pipe Hangers and Supports - Materials, Design and Manufacture
MSS SP-67	(1995) Butterfly Valves

MSS SP-69	(1996) Pipe Hangers and Supports - Selection and Application
MSS SP-70	(1990) Cast Iron Gate Valves, Flanged and Threaded Ends
MSS SP-71	(1990) Cast Iron Swing Check Valves, Flanges and Threaded Ends
MSS SP-72	(1992) Ball Valves with Flanged or Butt-welding Ends for General Service
MSS SP-73	(1991) Brazing Joints for Copper and Copper Alloy Pressure Fittings
MSS SP-78	(1987; R 1992) Cast Iron Plug Valves, Flanged and Threaded Ends
MSS SP-80	(1997) Bronze Gate, Globe, Angle and Check Valves
MSS SP-83	(1995) Class 3000 Steel Pipe Unions Socket-Welding and Threaded
MSS SP-85	(1994) Cast Iron Globe & Angle Valves, Flanged and Threaded Ends
MSS SP-110	(1996) Ball Valves Threaded, Socket-Welding, Solder Joint, Grooved and Flared Ends

NATIONAL ASSOCIATION OF PLUMBING-HEATING-COOLING CONTRACTORS (NAPHCC)

NAPHCC-01	(1996) National Standard Plumbing Code

NATIONAL FIRE PROTECTION ASSOCIATION (NFPA)

NFPA 90A	(1993) Installation of Air Conditioning and Ventilating Systems

NSF INTERNATIONAL (NSF)

NSF Std 14	(1965; Rev Nov 1990) Plastics Piping Components and Related Materials

PLASTIC PIPE AND FITTINGS ASSOCIATION (PPFA)

PPFA-01	(1991) Plastic Pipe in Fire Resistive Construction

PLUMBING AND DRAINAGE INSTITUTE (PDI)

PDI WH 201	(1992) Water Hammer Arresters

SOCIETY OF AUTOMOTIVE ENGINEERS (SAE)

SAE J1508	(1993) Hose Clamps

UNDERWRITERS LABORATORIES (UL)

UL 174	(1996) Household Electric Storage Tank Water Heaters

1.2 STANDARD PRODUCTS

Specified materials and equipment shall be standard products of a manufacturer regularly engaged in the manufacture of such products. Specified equipment shall essentially duplicate equipment that has performed satisfactorily at least two years prior to bid opening.

1.3 ELECTRICAL WORK

Motors, motor controllers and motor efficiencies shall conform to the requirements of Section 16415 ELECTRICAL WORK, INTERIOR. Electrical motor-driven equipment specified herein shall be provided complete with motors. Equipment shall be rated at 60 Hz, single phase, ac unless otherwise indicated. Where a motor controller is not provided in a motor-control center on the electrical drawings, a motor controller shall be as indicated. Motor controllers shall be provided complete with properly sized thermal-overload protection in each ungrounded conductor, auxiliary contact, and other equipment, at the specified capacity, and including an allowable service factor.

1.4 SUBMITTALS

Government approval is required for submittals with a "GA" designation; submittals having an "FIO" designation are for information only. The following shall be submitted in accordance with Section 01330 SUBMITTAL PROCEDURES:

SD-01 Data

Welding; FIO;AR.

A copy of qualified procedures and a list of names and identification symbols of qualified welders and welding operators.

SD-04 Drawings

Plumbing System; FIO;AR.

Detail drawings consisting of illustrations, schedules, performance charts, instructions, brochures, diagrams, and other information to illustrate the requirements and operations of each system. Detail drawings for the complete plumbing system including piping layouts and locations of connections; dimensions for roughing-in, foundation, and support points; schematic diagrams and wiring diagrams or connection and interconnection diagrams. Detail drawings shall indicate clearances required for maintenance and operation. Where piping and equipment are to be supported other than as indicated, details shall include loadings and proposed support methods. Mechanical drawing plans, elevations, views, and details, shall be drawn to scale.

Electrical Schematics; FIO;AR.

Complete electrical schematic lineless or full line interconnection and connection diagram for each piece of mechanical equipment having more than

one automatic or manual electrical control device.

SD-06 Instructions

Plumbing System; FIO;AR.

Diagrams, instructions, and other sheets proposed for posting. Manufacturer's recommendations for the installation of bell and spigot and hubless joints for cast iron soil pipe.

SD-09 Reports

Tests, Flushing and Sterilization; FIO;AR.

Test reports in booklet form showing all field tests performed to adjust each component and all field tests performed to prove compliance with the specified performance criteria, completion and testing of the installed system. Each test report shall indicate the final position of controls.

Backflow Prevention Assembly Tests; FIO;AR.

Certification of proper operation shall be as accomplished in accordance with state regulations by an individual certified by the state to perform such tests. If no state requirement exists, the Contractor shall have the manufacturer's representative test the device, to ensure the unit is properly installed and performing as intended. The Contractor shall provide written documentation of the tests performed and signed by the individual performing the tests.

SD-13 Certificates

Materials and Equipment; FIO;AR.

Where materials or equipment are specified to comply with requirements of AGA, or ASME, proof of such compliance. The label or listing of the specified agency will be acceptable evidence. In lieu of the label or listing, a written certificate may be submitted from an approved, nationally recognized testing organization equipped to perform such services, stating that the items have been tested and conform to the requirements and testing methods of the specified agency. Where equipment is specified to conform to requirements of the ASME Boiler and Pressure Vessel Code, the design, fabrication, and installation shall conform to the code.

SD-19 Operation and Maintenance Manuals

Plumbing System; FIO;AR.

Six copies of the operation manual outlining the step-by-step procedures required for system startup, operation and shutdown. The manual shall include the manufacturer's name, model number, service manual, parts list, and brief description of all equipment and their basic operating features. Six copies of the maintenance manual listing routine maintenance procedures, possible breakdowns and repairs. The manual shall include piping and equipment layout and simplified wiring and control diagrams of the system as installed.

1.5 REGULATORY REQUIREMENTS

1.5.1 Plumbing

Plumbing work shall be in accordance with NAPHCC-01.

1.6 PROJECT/SITE CONDITIONS

The Contractor shall become familiar with details of the work, verify dimensions in the field, and advise the Contracting Officer of any discrepancy before performing any work.

PART 2 PRODUCTS

2.1 MATERIALS

Materials for various services shall be in accordance with TABLES I and II. Pipe schedules shall be selected based on service requirements. Pipe fittings shall be compatible with the applicable pipe materials. Plastic pipe, fittings, and solvent cement shall meet NSF Std 14 and shall be NSF listed for the service intended. Plastic pipe, fittings, and solvent cement used for potable hot and cold water service shall bear the NSF seal "NSF-PW." Polypropylene pipe and fittings shall conform to dimensional requirements of Schedule 40, Iron Pipe size. Pipe threads (except dry seal) shall conform to ASME B1.20.1. Grooved pipe couplings and fittings shall be from the same manufacturer. Material or equipment containing lead shall not be used in any potable water system. Hubless cast-iron soil pipe shall not be installed under concrete floor slabs or in crawl spaces below kitchen floors. Plastic pipe shall not be installed in air plenums. Plastic pipe shall not be installed in a pressure piping system in buildings greater than three stories including any basement levels.

2.1.1 Pipe Joint Materials

Grooved pipe shall not be used under ground. Joints and gasket materials shall conform to the following:

a. Coupling for Cast-Iron Pipe: ASTM A 74, AWWA C606.

b. Coupling for Steel Pipe: AWWA C606.

c. Couplings for Grooved Pipe: Ductile Iron ASTM A 536 (Grade 65-45-12) or Malleable Iron ASTM A 47, Grade 32510. Copper ASTM A 536.

d. Flange Gaskets: Gaskets shall be made of non-asbestos material in accordance with ASME B16.21. Gaskets shall be flat, 1.6 mm (1/16 inch) thick, and contain Aramid fibers bonded with Styrene Butadiene Rubber (SBR) or Nitro Butadiene Rubber (NBR). Gaskets shall be the full face or self centering flat ring type. Gaskets used for hydrocarbon service shall be bonded with NBR.

e. Neoprene Gaskets for Hub and Cast-Iron Pipe and Fittings: CISPI HSN-85.

f. Brazing Material: Brazing material shall conform to AWS A5.8, BCuP-5.

g. Brazing Flux: Flux shall be in paste or liquid form appropriate for use with brazing material. Flux shall be as follows: lead-free; have a 100 percent flushable residue; contain slightly

acidic reagents; contain potassium borides; and contain fluorides. Silver brazing materials shall be in accordance with AWS A5.8.

h. Solder Material: Solder metal shall conform to ASTM B 32 95-5 tin-antimony.

i. Solder Flux: Flux shall be liquid form, non-corrosive, and conform to ASTM B 813, Standard Test 1.

j. PTFE Tape: PTFE Tape, for use with Threaded Metal or Plastic Pipe, ASTM D 3308.

k. Rubber Gaskets for Cast-Iron Soil-Pipe and Fittings: ASTM C 564.

l. Rubber Gaskets for Grooved Pipe: ASTM D 2000, maximum temperature 110 degrees C (230 degrees F).

m. Flexible Elastomeric Seals: ASTM D 3139, ASTM D 3212 or ASTM F 477.

n. Bolts and Nuts for Grooved Pipe Couplings: Heat-treated carbon steel, ASTM A 183.

o. Solvent Cement for Transition Joints between ABS and PVC Nonpressure Piping Components: ASTM D 3138.

p. Plastic Solvent Cement for ABS Plastic Pipe: ASTM D 2235.

q. Plastic Solvent Cement for PVC Plastic Pipe: ASTM D 2564 and ASTM D 2855.

r. Plastic Solvent Cement for CPVC Plastic Pipe: ASTM F 493.

s. Flanged fittings including flanges, bolts, nuts, bolt patterns, etc. shall be in accordance with ASME B16.5 class 150 and shall have the manufacturer's trademark affixed in accordance with MSS SP-25. Flange material shall conform to ASTM A 105. Blind flange material shall conform to ASTM A 516 cold service and ASTM A 515 for hot service. Bolts shall be high strength or intermediate strength with material conforming to ASTM A 193.

t. Plastic Solvent Cement for Styrene Rubber Plastic Pipe: ASTM D 3122.

2.1.2 Miscellaneous Materials

Miscellaneous materials shall conform to the following:

a. Water Hammer Arrester: PDI WH 201.

b. Copper, Sheet and Strip for Building Construction: ASTM B 370.

c. Asphalt Roof Cement: ASTM D 2822.

d. Hose Clamps: SAE J1508.

e. Supports for Off-The-Floor Plumbing Fixtures: ASME A112.6.1M.

f. Metallic Cleanouts: ASME A112.36.2M.

g. Plumbing Fixture Setting Compound: A preformed flexible ring seal molded from hydrocarbon wax material. The seal material shall be nonvolatile nonasphaltic and contain germicide and provide watertight, gastight, odorproof and verminproof properties.

h. Coal-Tar Protective Coatings and Linings for Steel Water Pipelines: AWWA C203.

i. Hypochlorites: AWWA B300.

j. Liquid Chlorine: AWWA B301.

k. Gauges - Pressure and Vacuum Indicating Dial Type - Elastic Element: ASME B40.1.

l. Thermometers: ASTM E 1.

2.1.3 Pipe Insulation Material

Insulation shall be as specified in Section 15080 THERMAL INSULATION FOR MECHANICAL SYSTEMS.

2.2 PIPE HANGERS, INSERTS, AND SUPPORTS

Pipe hangers, inserts, and supports shall conform to MSS SP-58 and MSS SP-69.

2.3 VALVES

Valves shall be provided on supplies to equipment and fixtures. Valves 65 mm (2-1/2 inches) and smaller shall be bronze with threaded bodies for pipe and solder-type connections for tubing. Valves 80 mm (3 inches) and larger shall have flanged iron bodies and bronze trim. Pressure ratings shall be based upon the application. Grooved end valves may be provided if the manufacturer certifies that the valves meet the performance requirements of applicable MSS standard. Valves shall conform to the following standards:

Description	Standard
Butterfly Valves	MSS SP-67
Cast-Iron Gate Valves, Flanged and Threaded Ends	MSS SP-70
Cast-Iron Swing Check Valves, Flanged and Threaded Ends	MSS SP-71
Ball Valves with Flanged Butt-Welding Ends for General Service	MSS SP-72
Ball Valves Threaded, Socket-Welding, Solder Joint, Grooved and Flared Ends	MSS SP-110
Cast-Iron Plug Valves, Flanged and Threaded Ends	MSS SP-78
Bronze Gate, Globe, Angle, and Check Valves	MSS SP-80

Description	Standard
Steel Valves, Socket Welding and Threaded Ends	ASME B16.34
Cast-Iron Globe and Angle Valves, Flanged and Threaded Ends	MSS SP-85
Vacuum Relief Valves	ASSE 1001
Water Heater Drain Valves	ASSE 1005
Temperature and Pressure Relief Valves for Hot Water Supply Systems	ANSI Z21.22
Temperature and Pressure Relief Valves for Automatically Fired Hot Water Boilers	ASME CSD-1 Safety Code No., Part CW, Article 5

2.3.1 Hose Bibbs

Hose bibbs with vacuum-breaker backflow preventer shall be brass with 20 mm (3/4 inch) male inlet threads, hexagon shoulder, and 20 mm (3/4 inch) hose connection. Faucet handle shall be securely attached to stem.

2.3.2 Wall Hydrants

Wall hydrants with vacuum-breaker backflow preventer shall have a nickle-brass or nickel-bronze wall plate or flange with nozzle and detachable key handle. A brass or bronze operating rod shall be provided within a galvanized iron casing of sufficient length to extend through the wall so that the valve is inside the building, and the portion of the hydrant between the outlet and valve is self-draining. A brass or bronze valve with coupling and union elbow having metal-to-metal seat shall be provided. Valve rod and seat washer shall be removable through the face of the hydrant. The hydrant shall have 20 mm (3/4 inch) exposed hose thread on spout and 20 mm (3/4 inch) male pipe thread on inlet.

2.3.3 Relief Valves

Water heaters and hot water storage tanks shall have a combination pressure and temperature (P&T) relief valve. The pressure relief element of a P&T relief valve shall have adequate capacity to prevent excessive pressure buildup in the system when the system is operating at the maximum rate of heat input. The temperature element of a P&T relief valve shall have a relieving capacity which is at least equal to the total input of the heaters when operating at their maximum capacity. Relief valves shall be rated according to ANSI Z21.22. Relief valves for systems where the maximum rate of heat input is less than 59 kW (200,000 Btuh) shall have 20 mm (3/4 inch) minimum inlets, and 20 mm (3/4 inch) outlets. Relief valves for systems where the maximum rate of heat input is greater than 59 kW (200,000 Btuh) shall have 25 mm (1 inch) minimum inlets, and 25 mm (1 inch) outlets. The discharge pipe from the relief valve shall be the size of the valve outlet.

2.4 FIXTURES

Fixtures shall be water conservation type, in accordance with NAPHCC-01. Fixtures for use by the physically handicapped shall be in accordance with CABO A117.1. Vitreous china, nonabsorbent, hard-burned, and vitrified

throughout the body shall be provided. Porcelain enameled ware shall have specially selected, clear white, acid-resisting enamel coating evenly applied on surfaces. No fixture will be accepted that shows cracks, crazes, blisters, thin spots, or other flaws. Fixtures shall be equipped with appurtenances such as traps, faucets, stop valves, and drain fittings. Each fixture and piece of equipment requiring connections to the drainage system, except grease interceptors, shall be equipped with a trap. Brass expansion or toggle bolts capped with acorn nuts shall be provided for supports, and polished chromium-plated pipe, valves, and fittings shall be provided where exposed to view. Fixtures with the supply discharge below the rim shall be equipped with backflow preventers. Internal parts of flush and/or flushometer valves, shower mixing valves, shower head face plates, pop-up stoppers of lavatory waste drains, and pop-up stoppers and overflow tees and shoes of bathtub waste drains may contain acetal resin, fluorocarbon, nylon, acrylonitrile-butadiene-styrene (ABS) or other plastic material, if the material has provided satisfactory service under actual commercial or industrial operating conditions for not less than 2 years. Plastic in contact with hot water shall be suitable for 82 degrees C (180 degrees F) water temperature. Plumbing fixtures shall be as indicated in paragraph PLUMBING FIXTURE SCHEDULE.

2.4.1 Lavatories

Vitreous china lavatories shall be provided with two integral molded lugs on the back-underside of the fixture and drilled for bolting to the wall in a manner similar to the hanger plate.

2.5 BACKFLOW PREVENTERS

Backflow preventers shall be approves and listed by the Foundation For Cross-Connection Control & Hydraulic Research. Reduced pressure principle assemblies, double check valve assemblies, atmospheric (nonpressure) type vacuum breakers, and pressure type vacuum breakers shall be tested, approved, and listed in accordance with FCCCHR-01. Backflow preventers with intermediate atmospheric vent shall conform to ASSE 1012. Reduced pressure principle backflow preventers shall conform to ASSE 1013. Hose connection vacuum breakers shall conform to ASSE 1011. Pipe applied atmospheric type vacuum breakers shall conform to ASSE 1001. Air gaps in plumbing systems shall conform to ASME A112.1.2.

2.6 DRAINS

2.6.1 Floor Drains

Floor drains shall consist of a galvanized body, integral seepage pan, and adjustable perforated or slotted chromium-plated bronze, nickel-bronze, or nickel-brass strainer, consisting of grate and threaded collar. Floor drains shall be cast iron except where metallic waterproofing membrane is installed. Drains shall be of double drainage pattern for embedding in the floor construction. The seepage pan shall have weep holes or channels for drainage to the drainpipe. The strainer shall be adjustable to floor thickness. A clamping device for attaching flashing or waterproofing membrane to the seepage pan without damaging the flashing or waterproofing membrane shall be provided when required. Drains shall be provided with threaded or caulked connection. In lieu of a caulked joint between the drain outlet and waste pipe, a neoprene rubber gasket conforming to ASTM C 564 may be installed, provided that the drain is specifically designed for the rubber gasket compression type joint. Floor and shower drains shall conform to ASME A112.21.1M.

2.6.2 Roof Drains, Overflow Drains and Expansion Joints

Roof and overflow drains shall conform to ASME A112.21.2M, with dome and integral flange, and shall have a device for making a watertight connection between roofing and flashing. The whole assembly shall be galvanized heavy pattern cast iron. For aggregate surface roofing, the drain shall be provided with a gravel stop. On roofs other than concrete construction, roof drains shall be complete with underdeck clamp, sump receiver, and an extension for the insulation thickness where applicable. A clamping device for attaching flashing or waterproofing membrane to the seepage pan without damaging the flashing or membrane shall be provided when required to suit the building construction. Strainer openings shall have a combined area equal to twice that of the drain outlet. The outlet shall be equipped to make a proper connection to threaded pipe of the same size as the downspout. An expansion joint of proper size to receive the conductor pipe shall be provided. The expansion joint shall consist of a heavy cast-iron housing, brass or bronze sleeve, brass or bronze fastening bolts and nuts, and gaskets or packing. The sleeve shall have a nominal thickness of not less than 3.416 mm (0.134 inch). Gaskets and packing shall be close-cell neoprene, O-ring packing shall be close-cell neoprene of 70 durometer. Packing shall be held in place by a packing gland secured with bolts.

2.7 TRAPS

Unless otherwise specified, traps shall be plastic per ASTM F 409 or copper-alloy adjustable tube type with slip joint inlet and swivel. Traps shall be without a cleanout. Tubes shall be copper alloy with walls not less than 0.813 mm (0.032 inch) thick within commercial tolerances, except on the outside of bends where the thickness may be reduced slightly in manufacture by usual commercial methods. Inlets shall have rubber washer and copper alloy nuts for slip joints above the discharge level. Swivel joints shall be below the discharge level and shall be of metal-to-metal or metal-to-plastic type as required for the application. Nuts shall have flats for wrench grip. Outlets shall have internal pipe thread, except that when required for the application, the outlets shall have sockets for solder-joint connections. The depth of the water seal shall be not less than 50 mm (2 inches). The interior diameter shall be not more than 3.2 mm (1/8 inch) over or under the nominal size, and interior surfaces shall be reasonably smooth throughout. A copper alloy "P" trap assembly consisting of an adjustable "P" trap and threaded trap wall nipple with cast brass wall flange shall be provided for lavatories. The assembly shall be a standard manufactured unit and may have a rubber-gasketed swivel joint.

2.8 WATER HEATER

Water heater types and capacities shall be as indicated. Each primary water heater shall have controls adjustable from 32 to 49 degrees C (90 to 120 degrees F). Hot water systems utilizing recirculation systems shall be tied into building off-hour controls. The thermal efficiencies and stand by heat losses shall conform to TABLE III for each type of water heater specified. The only exception is that the storage capacity need not meet the standard loss requirement if the tank surface area is not insulated to R-12.5 and if a standing light is not used.

2.8.1 Automatic Storage Type

Heaters shall be complete with control system, and shall have ASME rated

combination pressure and temperature relief valve.

2.8.2 Electric Type

Electric type water heaters shall conform to UL 174 with dual heating elements. The elements shall be wired so that only one element can operate at a time.

2.9 DOMESTIC WATER SERVICE METER

Cold water meter shall be of the positive displacement type conforming to AWWA C700. Meter register may be round or straight reading type, indicating gpm. Meter shall be provided with a pulse generator, remote readout register and all necessary wiring and accessories.

PART 3 EXECUTION

3.1 GENERAL INSTALLATION REQUIREMENTS

Hubless cast-iron pipe shall not be installed under concrete floor slabs. Piping located in air plenums shall conform to NFPA 90A requirements. Unprotected plastic pipe shall not be installed in air plenum. Piping located in shafts that constitute air ducts or that enclose air ducts shall be noncombustible in accordance with NFPA 90A. Installation of plastic pipe where in compliance with NFPA may be installed in accordance with PPFA-01. The plumbing system shall be installed complete with necessary fixtures, fittings, traps, valves, and accessories. Water and drainage piping shall be extended 1.5 m outside the building, unless otherwise indicated. A gate valve and drain shall be installed on the water service line inside the building approximately 150 mm above the floor from point of entry. Piping shall be connected to the exterior service lines or capped or plugged if the exterior service is not in place. Sewer and water pipes shall be laid in separate trenches, except when otherwise shown. Exterior underground utilities shall be at least 300 mm below the average local frost depth or as indicated on the drawings. If trenches are closed or the pipes are otherwise covered before being connected to the service lines, the location of the end of each plumbing utility shall be marked with a stake or other acceptable means. Valves shall be installed with control no lower than the valve body.

3.1.1 Water Pipe, Fittings, and Connections

3.1.1.1 Utilities

The piping shall be extended to fixtures, outlets, and equipment. The hot-water and cold-water piping system shall be arranged and installed to permit draining. The supply line to each item of equipment or fixture, except faucets, flush valves, or other control valves which are supplied with integral stops, shall be equipped with a shutoff valve to enable isolation of the item for repair and maintenance without interfering with operation of other equipment or fixtures. Supply piping to fixtures, faucets, hydrants, shower heads, and flushing devices shall be anchored to prevent movement.

3.1.1.2 Cutting and Repairing

The work shall be carefully laid out in advance, and unnecessary cutting of construction shall be avoided. Damage to building, piping, wiring, or equipment as a result of cutting shall be repaired by mechanics skilled in

the trade involved.

3.1.1.3 Protection of Fixtures, Materials, and Equipment

Pipe openings shall be closed with caps or plugs during installation. Fixtures and equipment shall be tightly covered and protected against dirt, water, chemicals, and mechanical injury. Upon completion of the work, the fixtures, materials, and equipment shall be thoroughly cleaned, adjusted, and operated. Safety guards shall be provided for exposed rotating equipment.

3.1.1.4 Mains, Branches, and Runouts

Piping shall be installed as indicated. Pipe shall be accurately cut and worked into place without springing or forcing. Structural portions of the building shall not be weakened. Aboveground piping shall run parallel with the lines of the building, unless otherwise indicated. Branch pipes from service lines may be taken from top, bottom, or side of main, using crossover fittings required by structural or installation conditions. Supply pipes, valves, and fittings shall be kept a sufficient distance from other work and other services to permit not less than 15 mm between finished covering on the different services. Bare and insulated water lines shall not bear directly against building structural elements so as to transmit sound to the structure or to prevent flexible movement of the lines. Water pipe shall not be buried in or under floors unless specifically indicated or approved. Changes in pipe sizes shall be made with reducing fittings. Use of bushings will not be permitted except for use in situations in which standard factory fabricated components are furnished to accommodate specific excepted installation practice. Change in direction shall be made with fittings, except that bending of pipe 100 mm (4 inches) and smaller will be permitted, provided a pipe bender is used and wide sweep bends are formed. The center-line radius of bends shall be not less than six diameters of the pipe. Bent pipe showing kinks, wrinkles, flattening, or other malformations will not be acceptable.

3.1.1.5 Pipe Drains

Pipe drains indicated shall consist of 20 mm (3/4 inch) hose bibb with renewable seat and gate valve ahead of hose bibb. At other low points, 20 mm (3/4 inch) brass plugs or caps shall be provided. Disconnection of the supply piping at the fixture is an acceptable drain.

3.1.1.6 Expansion and Contraction of Piping

Allowance shall be made throughout for expansion and contraction of water pipe. Each hot-water and hot-water circulation riser shall have expansion loops or other provisions such as offsets, changes in direction, etc., where indicated and/or required. Risers shall be securely anchored as required or where indicated to force expansion to loops. Branch connections from risers shall be made with ample swing or offset to avoid undue strain on fittings or short pipe lengths. Horizontal runs of pipe over 15 m in length shall be anchored to the wall or the supporting construction about midway on the run to force expansion, evenly divided, toward the ends. Sufficient flexibility shall be provided on branch runouts from mains and risers to provide for expansion and contraction of piping. Flexibility shall be provided by installing one or more turns in the line so that piping will spring enough to allow for expansion without straining. If mechanical grooved pipe coupling systems are provided, the deviation from design requirements for expansion and contraction may be

allowed pending approval of Contracting Officer.

3.1.1.7 Commercial-Type Water Hammer Arresters

Commercial-type water hammer arresters shall be provided on hot- and cold-water supplies and shall be located as generally indicated, with precise location and sizing to be in accordance with PDI WH 201. Water hammer arresters, where concealed, shall be accessible by means of access doors or removable panels. Commercial-type water hammer arresters shall conform to PDI WH 201. Vertical capped pipe columns will not be permitted.

3.1.2 Joints

Installation of pipe and fittings shall be made in accordance with the manufacturer's recommendations. Mitering of joints for elbows and notching of straight runs of pipe for tees will not be permitted. Joints shall be made up with fittings of compatible material and made for the specific purpose intended.

3.1.2.1 Threaded

Threaded joints shall have American Standard taper pipe threads conforming to ASME B1.20.1. Only male pipe threads shall be coated with graphite or with an approved graphite compound, or with an inert filler and oil, or shall have a polytetrafluoroethylene tape applied.

3.1.2.2 Mechanical Couplings

Grooved mechanical joints shall be prepared according to the coupling manufacturer's instructions. Pipe and groove dimensions shall comply with the tolerances specified by the coupling manufacturer. The diameter of grooves made in the field shall be measured using a "go/no-go" gauge, vernier or dial caliper, or narrow-land micrometer. Groove width and dimension of groove from end of the pipe shall be measured and recorded for each change in grooving tool setup to verify compliance with coupling manufacturer's tolerances. Grooved joints shall not be used in concealed locations.

3.1.2.3 Union and Flanged

Unions, flanges and mechanical couplings shall not be concealed in walls, ceilings, or partitions. Unions shall be used on pipe sizes 65 mm (2-1/2 inches) and smaller; flanges shall be used on pipe sizes 80 mm (3 inches) and larger.

3.1.2.4 Cast Iron Soil, Waste and Vent Pipe

Bell and spigot compression and hubless gasketed clamp joints for soil, waste and vent piping shall be installed per the manufacturer's recommendations.

3.1.2.5 Copper Tube and Pipe

The tube or fittings shall not be annealed when making connections. Connections shall be made with a multiflame torch.

a. Brazed. Brazed joints shall be made in conformance with AWS B2.2, MSS SP-73, and CDA-02 with flux and are acceptable for line sizes. Copper to copper joints shall include the use of

copper-phosphorus or copper-phosphorus-silver brazing metal without flux. Brazing of dissimilar metals (copper to bronze or brass) shall include the use of flux with either a copper-phosphorus, copper-phosphorus-silver or a silver brazing filler metal.

b. Soldered. Soldered joints shall be made with flux and are only acceptable for lines 50 mm (2 inches) and smaller. Soldered joints shall conform to ASME B31.5 and CDA-02.

c. Copper Tube Extracted Joint. An extracted mechanical joint may be made in copper tube. Joint shall be produced with an appropriate tool by drilling a pilot hole and drawing out the tube surface to form a collar having a minimum height of three times the thickness of the tube wall. To prevent the branch tube from being inserted beyond the depth of the extracted joint, dimpled depth stops shall be provided. Branch tube shall be notched for proper penetration into fitting to ensure a free flow joint. Extracted joints shall be brazed in accordance with NAPHCC-01 using B-Cup series filler metal in accordance with MSS SP-73. Soldered extracted joints will not be permitted.

3.1.2.6 Plastic Pipe

Acrylonitrile-Butadiene-Styrene (ABS) pipe shall have joints made with solvent cement. PVC and CPVC pipe shall have joints made with solvent cement elastomeric, threading, (threading of Schedule 80 Pipe is allowed only where required for disconnection and inspection; threading of Schedule 40 Pipe is not allowed), or mated flanged.

3.1.3 Dissimilar Pipe Materials

Connections between ferrous and non-ferrous copper pipe shall be made with dielectric unions or flange waterways. Connecting joints between plastic and metallic pipe shall be made with transition fitting for the specific purpose.

3.1.4 Corrosion Protection for Buried Pipe and Fittings

3.1.4.1 Cast Iron and Ductile Iron

The pipe shall be cleaned, coated, and wrapped prior to pipe tightness testing. Joints and fittings shall be cleaned, coated, and wrapped after pipe tightness testing. Tape shall conform to AWWA C203 and shall be applied with a 50 percent overlap. Primer shall be as recommended by the tape manufacturer.

3.1.4.2 Steel

Steel pipe, joints, and fittings shall be cleaned, coated with primer, and wrapped with tape. Pipe shall be cleaned, coated, and wrapped prior to pipe tightness testing. Joints and fittings shall be cleaned, coated, and wrapped after pipe tightness testing. Tape shall conform to AWWA C203and shall be applied with a 50 percent overlap. Primer shall be as recommended by the tape manufacturer.

3.1.5 Pipe Sleeves and Flashing

Pipe sleeves shall be furnished and set in their proper and permanent

location.

3.1.5.1 Sleeve Requirements

Pipes passing through concrete or masonry walls or concrete floors or roofs shall be provided with pipe sleeves fitted into place at the time of construction. Sleeves are not required for cast-iron soil pipe passing through concrete slab on grade, except where penetrating a membrane waterproof floor. A modular mechanical type sealing assembly may be installed in lieu of a waterproofing clamping flange and caulking and sealing of annular space between pipe and sleeve. The seals shall consist of interlocking synthetic rubber links shaped to continuously fill the annular space between the pipe and sleeve with corrosion-protected carbon steel bolts, nuts, and pressure plates. The links shall be loosely assembled with bolts to form a continuous rubber belt around the pipe with a pressure plate under each bolt head and each nut. After the seal assembly is properly positioned in the sleeve, tightening of the bolt shall cause the rubber sealing elements to expand and provide a watertight seal between the pipe and the sleeve. Each seal assembly shall be sized as recommended by the manufacturer to fit the pipe and sleeve involved. Sleeves shall not be installed in structural members, except where indicated or approved. Rectangular and square openings shall be as detailed. Each sleeve shall extend through its respective floor, or roof, and shall be cut flush with each surface, except for special circumstances. Pipe sleeves passing through floors in wet areas such as mechanical equipment rooms, lavatories, kitchens, and other plumbing fixture areas shall extend a minimum of 100 mm above the finished floor. Unless otherwise indicated, sleeves shall be of a size to provide a minimum of 6 mm (1/4 inch) clearance between bare pipe and inside of sleeve or between jacket over insulation and sleeves. Sleeves in bearing walls shall be steel pipe or cast-iron pipe. Sleeves for membrane waterproof floors shall be steel pipe, cast-iron pipe, or plastic pipe. Membrane clamping devices shall be provided on pipe sleeves for waterproof floors. Sleeves in nonbearing walls or ceilings may be steel pipe, cast-iron pipe, galvanized sheet metal with lock-type longitudinal seam, or moisture-resistant fiber or plastic. Plastic sleeves shall not be used in nonbearing fire walls, roofs, or floor/ceilings. Except as otherwise specified, the annular space between pipe and sleeve, or between jacket over insulation and sleeve, shall be sealed as indicated with sealants conforming to ASTM C 920 and with a primer, backstop material and surface preparation as specified in Section 07920 JOINT SEALING. Pipes passing through sleeves in concrete floors over crawl spaces shall be sealed as specified above. The annular space between pipe and sleeve or between jacket over insulation and sleeve shall not be sealed for interior walls which are not designated as fire rated. Sleeves through below-grade walls in contact with earth shall be recessed 15 mm from wall surfaces on both sides. Annular space between pipe and sleeve shall be filled with backing material and sealants in the joint between the pipe and concrete or masonry wall as specified above. Sealant selected for the earth side of the wall shall be compatible with dampproofing/waterproofing materials that are to be applied over the joint sealant.

3.1.5.2 Flashing Requirements

Pipes passing through roof or floor waterproofing membrane shall be installed through a 4.9 kg per square meter (16 ounce) copper flashing, each within an integral skirt or flange. Flashing shall be suitably formed, and the skirt or flange shall extend not less than 200 mm from the pipe and shall be set over the roof or floor membrane in a solid coating of

bituminous cement. The flashing shall extend up the pipe a minimum of 250 mm. For cleanouts, the flashing shall be turned down into the hub and caulked after placing the ferrule. Pipes passing through pitched roofs shall be flashed, using lead or copper flashing, with an adjustable integral flange of adequate size to extend not less than 200 mm from the pipe in all directions and lapped into the roofing to provide a watertight seal. The annular space between the flashing and the bare pipe or between the flashing and the metal-jacket-covered insulation shall be sealed as indicated. Flashing for dry vents shall be turned down into the pipe to form a waterproof joint. Pipes, up to and including 250 mm (10 inches) in diameter, passing through roof or floor waterproofing membrane may be installed through a cast-iron sleeve with caulking recess, anchor lugs, flashing-clamp device, and pressure ring with brass bolts. Flashing shield shall be fitted into the sleeve clamping device. Pipes passing through wall waterproofing membrane shall be sleeved as described above. A waterproofing clamping flange shall be installed.

3.1.5.3 Waterproofing

Waterproofing at floor-mounted water closets shall be accomplished by forming a flashing guard from soft-tempered sheet copper. The center of the sheet shall be perforated and turned down approximately 40 mm to fit between the outside diameter of the drainpipe and the inside diameter of the cast-iron or steel pipe sleeve. The turned-down portion of the flashing guard shall be embedded in sealant to a depth of approximately 40 mm; then the sealant shall be finished off flush to floor level between the flashing guard and drainpipe. The flashing guard of sheet copper shall extend not less than 200 mm from the drainpipe and shall be lapped between the floor membrane in a solid coating of bituminous cement. If cast-iron water closet floor flanges are used, the space between the pipe sleeve and drainpipe shall be sealed with sealant and the flashing guard shall be upturned approximately 40 mm to fit the outside diameter of the drainpipe and the inside diameter of the water closet floor flange. The upturned portion of the sheet fitted into the floor flange shall be sealed.

3.1.5.4 Optional Counterflashing

Instead of turning the flashing down into a dry vent pipe, or caulking and sealing the annular space between the pipe and flashing or metal-jacket-covered insulation and flashing, counterflashing may be accomplished by utilizing the following:

a. A standard roof coupling for threaded pipe up to 150 mm (6 inches) in diameter.

b. A tack-welded or banded-metal rain shield around the pipe.

3.1.5.5 Pipe Penetrations of Slab on Grade Floors

Where pipes, fixture drains, floor drains, cleanouts or similar items penetrate slab on grade floors, except at penetrations of floors with waterproofing membrane as specified in paragraphs Flashing Requirements and Waterproofing, a groove 6 to 13 mm wide by 6 to 10 mm deep shall be formed around the pipe, fitting or drain. The groove shall be filled with a sealant as specified in Section 07920 JOINT SEALING.

3.1.6 Fire Seal

Where pipes pass through fire walls, fire-partitions, fire-rated pipe chase

walls or floors above grade, a fire seal shall be provided as specified in Section 07270 FIRESTOPPING.

3.1.7 Supports

3.1.7.1 General

Hangers used to support piping 50 mm (2 inches) and larger shall be fabricated to permit adequate adjustment after erection while still supporting the load. Pipe guides and anchors shall be installed to keep pipes in accurate alignment, to direct the expansion movement, and to prevent buckling, swaying, and undue strain. Piping subjected to vertical movement when operating temperatures exceed ambient temperatures shall be supported by variable spring hangers and supports or by constant support hangers. In the support of multiple pipe runs on a common base member, a clip or clamp shall be used where each pipe crosses the base support member. Spacing of the base support members shall not exceed the hanger and support spacing required for an individual pipe in the multiple pipe run.

3.1.7.2 Pipe Supports and Structural Bracing, Seismic Requirements

Piping and attached valves shall be supported and braced to resist seismic loads as specified Section 13080 SEISMIC PROTECTION FOR MECHANICAL, ELECTRICAL EQUIPMENT. Structural steel required for reinforcement to properly support piping, headers, and equipment, but not shown, shall be provided. Material used for supports shall be as specified in Section 05120 STRUCTURAL STEEL.

3.1.7.3 Pipe Hangers, Inserts, and Supports

Installation of pipe hangers, inserts and supports shall conform to MSS SP-58 and MSS SP-69, except as modified herein.

a. Types 5, 12, and 26 shall not be used.

b. Type 3 shall not be used on insulated pipe.

c. Type 18 inserts shall be secured to concrete forms before concrete is placed. Continuous inserts which allow more adjustment may be used if they otherwise meet the requirements for type 18 inserts.

d. Type 19 and 23 C-clamps shall be torqued per MSS SP-69 and shall have both locknuts and retaining devices furnished by the manufacturer. Field-fabricated C-clamp bodies or retaining devices are not acceptable.

e. Type 20 attachments used on angles and channels shall be furnished with an added malleable-iron heel plate or adapter.

f. Type 24 may be used only on trapeze hanger systems or on fabricated frames.

g. Type 39 saddles shall be used on insulated pipe 100 mm (4 inches) and larger when the temperature of the medium is 15 degrees C or higher. Type 39 saddles shall be welded to the pipe.

h. Type 40 shields shall:

(1) Be used on insulated pipe less than 100 mm (4 inches).

(2) Be used on insulated pipe 100 mm (4 inches) and larger when the temperature of the medium is 15 degrees C or less.

(3) Have a high density insert for pipe 50 mm (2 inches) and larger and for smaller pipe sizes when the insulation is suspected of being visibly compressed, or distorted at or near the shield/insulation interface. High density inserts shall have a density of 128 kg per cubic meter (8 pcf) or greater.

i. Horizontal pipe supports shall be spaced as specified in MSS SP-69 and a support shall be installed not over 300 mm from the pipe fitting joint at each change in direction of the piping. Pipe supports shall be spaced not over 1.5 m apart at valves. Operating temperatures in determining hanger spacing for PVC or CPVC pipe shall be 49 degrees C for PVC and 82 degrees C for CPVC. Horizontal pipe runs shall include allowances for expansion and contraction.

j. Vertical pipe shall be supported at each floor, except at slab-on-grade, at intervals of not more than 4.5 m nor more than 2 m from end of risers, and at vent terminations. Vertical pipe risers shall include allowances for expansion and contraction.

k. Type 40 shields used on insulated pipe shall have high density inserts with a density of 128 kg per cubic meter (8 pcf) or greater.

l. Type 35 guides using steel, reinforced polytetrafluoroethylene (PTFE) or graphite slides shall be provided to allow longitudinal pipe movement. Slide materials shall be suitable for the system operating temperatures, atmospheric conditions, and bearing loads encountered. Lateral restraints shall be provided as needed. Where steel slides do not require provisions for lateral restraint the following may be used:

(1) On pipe 100 mm (4 inches) and larger when the temperature of the medium is 15 degrees C or higher, a Type 39 saddle, welded to the pipe, may freely rest on a steel plate.

(2) On pipe less than 100 mm (4 inches) a Type 40 shield, attached to the pipe or insulation, may freely rest on a steel plate.

(3) On pipe 100 mm (4 inches) and larger carrying medium less that 15 degrees C a Type 40 shield, attached to the pipe or insulation, may freely rest on a steel plate.

m. Pipe hangers on horizontal insulated pipe shall be the size of the outside diameter of the insulation. The insulation shall be continuous through the hanger on all pipe sizes and applications.

n. Where there are high system temperatures and welding to piping is not desirable, the type 35 guide shall include a pipe cradle, welded to the guide structure and strapped securely to the pipe. The pipe shall be separated from the slide material by at least 100 mm or by an amount adequate for the insulation, whichever is greater.

o. Hangers and supports for plastic pipe shall not compress, distort, cut or abrade the piping, and shall allow free movement of pipe except where otherwise required in the control of expansion/contraction.

3.1.8 Welded Installation

Plumbing pipe weldments shall be as indicated. Changes in direction of piping shall be made with welding fittings only; mitering or notching pipe to form elbows and tees or other similar type construction will not be permitted. Branch connection may be made with either welding tees or forged branch outlet fittings. Branch outlet fittings shall be forged, flared for improvement of flow where attached to the run, and reinforced against external strains. Beveling, alignment, heat treatment, and inspection of weld shall conform to ASME B31.1. Weld defects shall be removed and repairs made to the weld, or the weld joints shall be entirely removed and rewelded. After filler metal has been removed from its original package, it shall be protected or stored so that its characteristics or welding properties are not affected. Electrodes that have been wetted or that have lost any of their coating shall not be used.

3.1.9 Pipe Cleanouts

Pipe cleanouts shall be the same size as the pipe except that cleanout plugs larger than 100 mm (4 inches) will not be required. A cleanout installed in connection with cast-iron soil pipe shall consist of a long-sweep 1/4 bend or one or two 1/8 bends extended to the place shown. An extra-heavy cast-brass or cast-iron ferrule with countersunk cast-brass head screw plug shall be caulked into the hub of the fitting and shall be flush with the floor. Cleanouts in connection with other pipe, where indicated, shall be T-pattern, 90-degree branch drainage fittings with cast-brass screw plugs, except plastic plugs shall be installed in plastic pipe. Plugs shall be the same size as the pipe up to and including 100 mm (4 inches). Cleanout tee branches with screw plug shall be installed at the foot of soil and waste stacks, at the foot of interior downspouts, on each connection to building storm drain where interior downspouts are indicated, and on each building drain outside the building. Cleanout tee branches may be omitted on stacks in single story buildings with slab-on-grade construction or where less than 450 mm of crawl space is provided under the floor. Cleanouts on pipe concealed in partitions shall be provided with chromium plated bronze, nickel bronze, nickel brass or stainless steel flush type access cover plates. Round access covers shall be provided and secured to plugs with securing screw. Square access covers may be provided with matching frames, anchoring lugs and cover screws. Cleanouts in finished walls shall have access covers and frames installed flush with the finished wall. Cleanouts installed in finished floors subject to foot traffic shall be provided with a chrome-plated cast brass, nickel brass, or nickel bronze cover secured to the plug or cover frame and set flush with the finished floor. Heads of fastening screws shall not project above the cover surface. Where cleanouts are provided with adjustable heads, the heads shall be cast iron.

3.2 WATER HEATERS AND HOT WATER STORAGE TANKS

3.2.1 Relief Valves

No valves shall be installed between a relief valve and its water heater or storage tank. The P&T relief valve shall be installed where the valve

actuator comes in contact with the hottest water in the heater. Whenever possible, the relief valve shall be installed directly in a tapping in the tank or heater; otherwise, the P&T valve shall be installed in the hot-water outlet piping. A vacuum relief valve shall be provided on the cold water supply line to the hot-water storage tank or water heater and mounted above and within 150 mm above the top of the tank or water heater.

3.2.2 Heat Traps

Piping to and from each water heater and hot water storage tank shall be routed horizontally and downward a minimum of 600 mm before turning in an upward direction.

3.2.3 Connections to Water Heaters

Connections of metallic pipe to water heaters shall be made with dielectric unions or flanges.

3.3 FIXTURES AND FIXTURE TRIMMINGS

Angle stops, straight stops, stops integral with the faucets, or concealed type of lock-shield, and loose-key pattern stops for supplies with threaded, sweat or solvent weld inlets shall be furnished and installed with fixtures. Where connections between copper tubing and faucets are made by rubber compression fittings, a beading tool shall be used to mechanically deform the tubing above the compression fitting. Exposed traps and supply pipes for fixtures and equipment shall be connected to the rough piping systems at the wall, unless otherwise specified under the item. Floor and wall escutcheons shall be as specified. Drain lines and hot water lines of fixtures for handicapped personnel shall be insulated and do not require polished chrome finish. Plumbing fixtures and accessories shall be installed within the space shown.

3.3.1 Fixture Connections

Where space limitations prohibit standard fittings in conjunction with the cast-iron floor flange, special short-radius fittings shall be provided. Connections between earthenware fixtures and flanges on soil pipe shall be made gastight and watertight with a closet-setting compound or neoprene gasket and seal. Use of natural rubber gaskets or putty will not be permitted. Fixtures with outlet flanges shall be set the proper distance from floor or wall to make a first-class joint with the closet-setting compound or gasket and fixture used.

3.3.2 Flushometer Valves

Flushometer valves shall be secured to prevent movement by anchoring the long finished top spud connecting tube to wall adjacent to valve with approved metal bracket. Bumpers for water closet seats shall be installed on the wall.

3.3.3 Height of Fixture Rims Above Floor

Lavatories shall be mounted with rim 775 mm above finished floor. Wall-hung drinking fountains and water coolers shall be installed with rim 1020 mm above floor. Wall-hung service sinks shall be mounted with rim 700 mm above the floor. Installation of fixtures for use by the physically handicapped shall be in accordance with CABO A117.1.

3.3.4 Fixture Supports

Fixture supports for off-the-floor lavatories, urinals, water closets, and other fixtures of similar size, design, and use, shall be of the chair-carrier type. The carrier shall provide the necessary means of mounting the fixture, with a foot or feet to anchor the assembly to the floor slab. Adjustability shall be provided to locate the fixture at the desired height and in proper relation to the wall. Support plates, in lieu of chair carrier, shall be fastened to the wall structure only where it is not possible to anchor a floor-mounted chair carrier to the floor slab.

3.3.4.1 Support for Solid Masonry Construction

Chair carrier shall be anchored to the floor slab. Where a floor-anchored chair carrier cannot be used, a suitable wall plate shall be imbedded in the masonry wall.

3.3.4.2 Support for Cellular-Masonry Wall Construction

Chair carrier shall be anchored to floor slab. Where a floor-anchored chair carrier cannot be used, a suitable wall plate shall be fastened to the cellular wall using through bolts and a back-up plate.

3.3.4.3 Support for Steel Stud Frame Partitions

Chair carrier shall be used. The anchor feet and tubular uprights shall be of the heavy duty design; and feet (bases) shall be steel and welded to a square or rectangular steel tube upright. Wall plates, in lieu of floor-anchored chair carriers, shall be used only if adjoining steel partition studs are suitably reinforced to support a wall plate bolted to these studs.

3.3.4.4 Support for Wood Stud Construction

Where floor is a concrete slab, a floor-anchored chair carrier shall be used. Where entire construction is wood, wood crosspieces shall be installed. Fixture hanger plates, supports, brackets, or mounting lugs shall be fastened with not less than No. 10 wood screws, 6 mm (1/4 inch) thick minimum steel hanger, or toggle bolts with nut. The wood crosspieces shall extend the full width of the fixture and shall be securely supported.

3.3.4.5 Wall-Mounted Water Closet Gaskets

Where wall-mounted water closets are provided, reinforced wax, treated felt, or neoprene gaskets shall be provided. The type of gasket furnished shall be as recommended by the chair-carrier manufacturer.

3.3.5 Backflow Prevention Devices

Plumbing fixtures, equipment, and pipe connections shall not cross connect or interconnect between a potable water supply and any source of nonpotable water. Backflow preventers shall be installed where indicated and in accordance with NAPHCC-01 at all other locations necessary to preclude a cross-connect or interconnect between a potable water supply and any nonpotable substance. In addition backflow preventers shall be installed at all locations where the potable water outlet is below the flood level of the equipment, or where the potable water outlet will be located below the level of the nonpotable substance. Backflow preventers shall be located so that no part of the device will be submerged. Backflow preventers shall be

of sufficient size to allow unrestricted flow of water to the equipment, and preclude the backflow of any nonpotable substance into the potable water system. Access shall be provided for maintenance and testing. Each device shall be a standard commercial unit.

3.3.6 Access Panels

Access panels shall be provided for concealed valves and controls, or any item requiring inspection or maintenance. Access panels shall be of sufficient size and located so that the concealed items may be serviced, maintained, or replaced. Access panels shall be as specified in Section 05500 MISCELLANEOUS METAL.

3.3.7 Traps

Each trap shall be placed as near the fixture as possible, and no fixture shall be double-trapped. Traps installed on cast-iron soil pipe shall be cast iron. Traps installed on steel pipe or copper tubing shall be recess-drainage pattern, or brass-tube type. Traps installed on plastic pipe may be plastic conforming to ASTM D 3311. Traps for acid-resisting waste shall be of the same material as the pipe.

3.3.8 Shower Pans

3.3.8.1 General

The floor of each individual shower, the shower-area portion of combination shower and drying room, and the entire shower and drying room where the two are not separated by curb or partition, shall be made watertight with a shower pan fabricated in place. The shower pan material shall be cut to size and shape of the area indicated, in one piece to the maximum extent practicable, allowing a minimum of 150 mm for turnup on walls or partitions, and shall be folded over the curb with an approximate return of 1/4 of curb height. The upstands shall be placed behind any wall or partition finish. Subflooring shall be smooth and clean, with nailheads driven flush with surface, and shall be sloped to drain. Shower pans shall be clamped to drains with the drain clamping ring.

3.4 WATER METER REMOTE READOUT REGISTER

The remote readout register shall be mounted at the location indicated or as directed by the Contracting Officer.

3.5 IDENTIFICATION SYSTEMS

3.5.1 Identification Tags

Identification tags made of brass, engraved laminated plastic, or engraved anodized aluminum, indicating service and valve number shall be installed on valves, except those valves installed on supplies at plumbing fixtures. Tags shall be 35 mm (1-3/8 inch) minimum diameter, and marking shall be stamped or engraved. Indentations shall be black, for reading clarity. Tags shall be attached to valves with No. 12 AWG, copper wire, chrome-plated beaded chain, or plastic straps designed for that purpose.

3.5.2 Color Coding

Color coding for piping identification shall be as specified in Section 09900 PAINTING, GENERAL.

3.5.3 Color Coding Scheme for Locating Hidden Utility Components

Scheme shall be provided in buildings having suspended grid ceilings. The color coding scheme shall identify points of access for maintenance and operation of operable components which are not visible from the finished space and installed in the space directly above the suspended grid ceiling. The operable components shall include valves, dampers, switches, linkages and thermostats. The color coding scheme shall consist of a color code board and colored metal disks. Each colored metal disk shall be approximately 12 mm (3/8 inch) in diameter and secured to removable ceiling panels with fasteners. The fasteners shall be inserted into the ceiling panels so that the fasteners will be concealed from view. The fasteners shall be manually removable without tools and shall not separate from the ceiling panels when panels are dropped from ceiling height. Installation of colored metal disks shall follow completion of the finished surface on which the disks are to be fastened. The color code board shall have the approximate dimensions of 1 m width, 750 mm height, and 12 mm (1/2 inch) thickness. The board shall be made of wood fiberboard and framed under glass or 1.6 mm (1/16 inch) transparent plastic cover. Unless otherwise directed, the color code symbols shall be approximately 20 mm (3/4 inch) in diameter and the related lettering in 15 mm (1/2 inch) high capital letters. The color code board shall be mounted and located in the mechanical or equipment room. The color code system shall be as indicated by the Contracting Officer.

3.6 ESCUTCHEONS

Escutcheons shall be provided at finished surfaces where bare or insulated piping, exposed to view, passes through floors, walls, or ceilings, except in boiler, utility, or equipment rooms. Escutcheons shall be fastened securely to pipe or pipe covering and shall be satin-finish, corrosion-resisting steel, polished chromium-plated zinc alloy, or polished chromium-plated copper alloy. Escutcheons shall be either one-piece or split-pattern, held in place by internal spring tension or setscrew.

3.7 PAINTING

Painting of pipes, hangers, supports, and other iron work, either in concealed spaces or exposed spaces, is specified in Section 09900PAINTING, GENERAL.

3.8 TESTS FLUSHING AND STERILIZATION

3.8.1 Plumbing System

The plumbing system shall be tested in accordance with NAPHCC-01.

3.8.1.1 Test of Backflow Prevention Assemblies

Backflow prevention assembly shall be tested using gauges specifically designed for the testing of backflow prevention assemblies. Gauges shall be tested annually for accuracy in accordance with the University of Southern California's Foundation of Cross Connection Control and Hydraulic Research or the American Water Works Association Manual of Cross Connection (Manual M-14). Report form for each assembly shall include, as a minimum, the following:

Data on Device	Data on Testing Firm

Type of Assembly	Name
Manufacturer	Address
Model Number	Certified Tester
Serial Number	Certified Tester No.
Size	Date of Test
Location	
Test Pressure Readings	Serial Number and Test Data of Gauges

If the unit fails to meet specified requirements, the unit shall be repaired and retested.

3.8.2 Defective Work

If inspection or test shows defects, such defective work or material shall be replaced or repaired as necessary and inspection and tests shall be repeated. Repairs to piping shall be made with new materials. Caulking of screwed joints or holes will not be permitted.

3.8.3 System Flushing

After tests are completed, potable water piping shall be flushed. In general, sufficient water shall be used to produce a minimum water velocity of 0.762 meters per second (2.5 feet per second) through piping being flushed. Flushing shall be continued until discharge water shows no discoloration. System shall be drained at low points. Strainer screens shall be removed, cleaned, and replaced in line. After flushing and cleaning, systems shall be prepared for service by immediately filling water piping with clean, fresh potable water. Any stoppage, discoloration, or other damage to the finish, furnishings, or parts of the building due to the Contractor's failure to properly clean the piping system shall be repaired by the Contractor. When the work is complete, the hot-water system shall be adjusted for uniform circulation. Flushing devices and automatic control systems shall be adjusted for proper operation.

3.8.4 Operational Test

Upon completion of and prior to acceptance of the installation, the Contractor shall subject the plumbing system to operating tests to demonstrate satisfactory functional and operational efficiency. Such operating tests shall cover a period of not less than 8 hours for each system and shall include the following information in a report with conclusion as to the adequacy of the system:

a. Time, date, and duration of test.

b. Water pressures at the most remote and the highest fixtures.

c. Operation of each fixture and fixture trim.

d. Operation of each valve, hydrant, and faucet.

e. Pump suction and discharge pressures.

f. Temperature of each domestic hot-water supply.

g. Operation of each floor, roof and overflow drain by flooding with water.

h. Operation of each vacuum breaker and backflow preventer.

3.8.5 Disinfection

After pressure tests have been made, the entire domestic hot- and cold-water distribution system shall be sterilized. System shall be thoroughly flushed with water of sufficient velocity until all entrained dirt and other foreign material have been removed, before introducing chlorinating material. The chlorinating material shall be hypochlorites or liquid chlorine. Water chlorination procedure shall be in accordance with AWWA M20. The chlorinating material shall be fed into the water piping system at a constant rate at a concentration of at least 50 parts per million (ppm). A properly adjusted hypochlorite solution injected into the main with a hypochlorinator, or liquid chlorine injected into the main through a solution-feed chlorinator and booster pump, shall be used. The chlorine residual shall be checked at intervals to ensure that the proper level is maintained. Chlorine application shall continue until the entire main is filled. The water shall remain in the system for a minimum of 24 hours. Each valve in the system being sterilized shall be opened and closed several times during the contact period to ensure its proper disinfection. Following the 24-hour period, no less than 25 ppm chlorine residual shall remain in the system. Water tanks shall be disinfected by the addition of chlorine directly to the filling water. Following a 6 hour period, no less than 50 ppm chlorine residual shall remain in the tank. The system including the tanks shall then be flushed with clean water until the residual chlorine is reduced to less than one part per million. During the flushing period each valve and faucet shall be opened and closed several times. From several points in the system the Contracting Officer will take samples of water in properly sterilized containers for bacterial examination. The samples of water shall be tested for total coliform organisms (coliform bacteria, fecal coliform, streptococcal, and other bacteria) in accordance with AWWA-01. The testing method used shall be either the multiple-tube fermentation technique or the membrane-filter technique. The sterilizing shall be repeated until tests indicate the absence of coliform organisms (zero mean coliform density per 100 milliliters) in the samples for at least 2 full days. The system will not be accepted until satisfactory bacteriological results have been obtained.

3.9 PLUMBING FIXTURE SCHEDULE

P-1 WATER CLOSET:

Siphon-jet, elongated bowl, top supply spud, ASME A112.19.2M, wall mounted. Floor flange shall be copper alloy, cast iron, or plastic.

Gasket shall be wax type.

Seat - CID A-A-238, Type A, white plastic, elongated, open front.

Flushometer Valve - ASSE 1037, large diaphragm type with non-hold-open feature, backcheck angle control stop, and vacuum breaker. Minimum upper chamber inside diameter of not less than 66.7 mm (2-5/8 inches) at the point where the diaphragm is sealed between the upper and lower chambers. The maximum water use shall be 6 liters per flush.

P-1A WATER CLOSET HANDICAPPED:

Top rim of bowl shall be 457 mm (18 inches) above the floor; other features are the same as P-1.

P-2 URINAL:

Wall hanging, with integral trap and extended shields, ASME A112.19.2M siphon jet. Top supply connection, back outlet.

Flushometer Valve - Similar to Flushometer Valve for P-1. The maximum water use shall be 3.8 liters per flush.

P-2A URINAL HANDICAPPED:

Same as P-2 but mounted for handicapped.

P-3 LAVATORY:

Manufacturer's standard sink depth, vitreous china ASME A112.19.2M.

Faucet - Faucets shall be single control, mixing type. Faucets shall have replaceable seats and washers. Faucets shall have metal replaceable cartridge control unit or metal cartridge units with diaphragm which can be replaced without special tools.Valves and handles shall be copper alloy. Connection between valve and spout for center-set faucet shall be of rigid metal tubing. Flow shall be limited to 1 liter per cycle at a flowing water pressure of 549 kPa if a metering device or fitting is used that limits the period of water discharge such as a foot switch or fixture occupancy sensor. If a metering device is not used, the flow shall be limited to 0.16 liters per second at a flowing pressure of 549 kPa.

Handles - Lever type. Cast, formed, or drop forged copper alloy.

Drain - Strainer shall be copper alloy or stainless steel. See paragraph FIXTURES for optional plastic accessories.

P-3A WHEELCHAIR LAVATORY:

Same as P-3 but with gooseneck spat and elbow controls.

P-6 KITCHEN SINK:

Ledge back with holes for faucet and spout single bowl 609.6 x 762.0 mm (24 x 30 inches) stainless steel ASME A112.19.3M.

Faucet and Spout - Cast or wrought copper alloy. Aerator shall have internal threads. Flow shall be limited to 1 liter per cycle at a flowing water pressure of 549 kPa if a metering device or fitting is used that limits the period of water discharge such as a foot switch or fixture occupancy sensor. If a metering device is not used, the flow shall be limited to 0.16 liters per second at a flowing water pressure of 549 kPa.

Handle - Cast copper alloy, wrought copper alloy, or stainless steel. Single lever type.

Drain Assembly - Plug, cup strainer, crossbars, jam nuts, washers, couplings, stopper, etc. shall be copper alloy or stainless steel.

P-4 SERVICE SINK:

Enameled cast iron ASME A112.19.1M, copper alloy or stainless steel ASME A112.19.3M trap standard 609.6 mm wide x 508.0 mm deep (24 inches wide x 20 inches deep), splashback 228.6 mm (9 inches) high.

Faucet and Spout - Cast or wrought copper alloy, with top or bottom brace, with backflow preventer. Faucets shall have replaceable seat and the washer shall rotate onto the seat. Handles shall be four arm type. Strainers shall have internal threads.

Drain Assembly - Plug, cup strainer, crossbars, jam nuts, washers, couplings, stopper, etc. shall be copper alloy or stainless steel.

Trap - Cast iron, minimum 7.5 cm diameter.

P-8 Shower

Emergency Showers: Head for Emergency and Emergency Eye and Face Wash. Shower control shall be 25 mm (1 inch) or 40 mm (1-1/2 inch) stay-open type control valve. Unit shall be corrosion-resisting steel or enameled cast iron and shall be pedestal mounted.

P-5A WATER COOLER DRINKING FOUNTAINS:

Water cooler drinking fountains shall: be self contained, conform to ARI 1010, use one of the fluorocarbon gases conforming to ARI 700 and ASHRAE 34 which has an Ozone Depletion Potential of less than or equal to 0.05, have a capacity to deliver 30.2 liters per hour (8 gph) of water at 10 degrees C (50 degrees F) with an inlet water temperature of 27 degrees C (80 degrees F) while residing in a room environment of 32 degrees C (90 degrees F), and have self-closing valves. Self-closing valves shall have automatic stream regulators, have a flow control capability, have a push button actuation or have a cross-shaped index metal turn handle without a hood. Exposed surfaces of stainless steel shall have No. 4 general polish finish. Spouts shall provide a flow of water at least 100 mm (4 inches) high so as to allow the insertion of a cup or glass under the flow of water.

Handicapped - Handicapped units shall be surface wall-mounted. The dimensions shall be 381.0 mm (15 inches) wide, 508.0 mm (20 inches) deep, with a back height of 152.4 to 203.2 mm (6 to 8 inches). The unit shall clear the floor or ground by at least 200 mm (8 inches). A clear knee space shall exist between the bottom of the bowl and the floor or ground of at least 685 mm (27 inches) and between the front edge of the bowl and the body of the unit of at least 200 mm (8 inches). A 200 mm (8 inch) wide clear space shall exist on both sides of the unit. The spout height shall be no more than 1 m (36 inches) above the floor or ground to the outlet. The spout shall be at the front of the unit and direct the water flow in a trajectory that is parallel or nearly parallel to the front of the unit. The bowl shall be 165.1 mm (6-1/2 inches) high, made of corrosion resisting steel and be for interior installation.

P-7 Photographic Sink (900 mm L x 500 mm W x 300 mm H):

Photographic sink shall be made of 18 gauge 316LC stainless steel heliarc welded into one piece construction. Welds shall be ground smooth, passivated and polished. Sink shall have rounded inside corners with a 20 mm radius. The sink drain shall include 40 mm diameter stainless steel drain strainer. An intrigal backsplash 225 mm H x 125 mm W and shall run for the full length of the sink. All unexposed surfaces of the sink pan shall be insulated to inhibit condensation, for sound deadening

and for temperature retention. Sink shall have one faucet with tamper proof hose bibb vacuum breaker with garden hose thread. The faucet shall be centered on the backsplash. Sink shall have one overflow standpipe. Sink shall include one 9.5 mm high PVC duckboard. Sink shall include a sink mounted swing out eyewash. The sink shall include an epoxy enamel steel stand. The stand shall consist of two solid end panels, with adjustable leveling feet, upper front and rear horizontal support panels and under sink support members.

3.10 POSTED INSTRUCTIONS

Framed instructions under glass or in laminated plastic, including wiring and control diagrams showing the complete layout of the entire system, shall be posted where directed. Condensed operating instructions explaining preventive maintenance procedures, methods of checking the system for normal safe operation, and procedures for safely starting and stopping the system shall be prepared in typed form, framed as specified above for the wiring and control diagrams and posted beside the diagrams. The framed instructions shall be posted before acceptance testing of the systems.

3.11 PERFORMANCE OF WATER HEATING EQUIPMENT

Standard rating condition terms are as follows:

EF = Energy factor, overall efficiency.

ET = Thermal efficiency with 21 degrees C delta T.

EC = Combustion efficiency, 100 percent - flue loss when smoke = o (trace is permitted).

SL = Standby loss in W/0.093 sq. m. based on 27 degrees C delta T, or in percent per hour based on nominal 38 degrees C delta T.

HL = Heat loss of tank surface area.

V = Storage volume in liters

3.11.1 Storage Water Heaters

3.11.1.1 Electric

a. Storage capacity of 454 liters or less, and input rating of 12 kW or less: minimum energy factor (EF) shall be 0.95-0.00132V per 10 CFR 430.

b. Storage capacity of more than 454 liters or input rating more than 12 kW: maximum SL shall be 1.9 w/0.093 sq. m. per ASHRAE 90.1, Addenda B.

3.11.2 Tables

TABLE I
PIPE AND FITTING MATERIALS FOR
DRAINAGE, WASTE, AND VENT PIPING SYSTEMS

		SERVICE				
Item #	Pipe and Fitting Materials	A	B	C	D	E
1	Cast iron soil pipe and fittings, hub and spigot, ASTM A 74 with compression gaskets	X	X	X	X	X
2	Cast iron pipe and fittings hubless, CISPI 301 and ASTM A 888	X	X	X	X	
3	Cast iron drainage fittings, threaded, ASME B16.12 for use with Item 10	X		X	X	
4	Cast iron screwed fittings (threaded) ASME B16.4 for use with Item 10				X	X
5	Grooved pipe couplings, ferrous and non-ferrous pipe ASTM A 536 and ASTM A 47	X	X		X	X
6	Ductile iron grooved joint fittings for ferrous pipe ASTM A 536 and ASTM A 47 for use with Item 5	X	X		X	X
7	Bronze sand casting grooved joint pressure fittings for non-ferrous pipe ASTM B 584, for use with Item 5	X	X		X	X
8	Wrought copper grooved joint pressure pressure fittings for non-ferrous pipe ASTM B 75 C12200, ASTM B 152 C11000, ASME B16.22 ASME B16.22 for use with Item 5	X	X			
9	Malleable-iron threaded fittings, galvanized ASME B16.3 for use with Item 10				X	X
10	Steel pipe, seamless galvanized, ASTM A 53, Type S, Grade B	X			X	X
11	Seamless red brass pipe, ASTM B 43			X	X	
12	Bronzed flanged fittings, ASME B16.24 for use with Items 11 and 14				X	X
13	Cast copper alloy solder joint pressure fittings, ASME B16.18 for use with Item 14				X	X

TABLE I
PIPE AND FITTING MATERIALS FOR
DRAINAGE, WASTE, AND VENT PIPING SYSTEMS

		SERVICE				
Item #	Pipe and Fitting Materials	A	B	C	D	E
14	Seamless copper pipe, ASTM B 42				X	
15	Cast bronze threaded fittings, ASME B16.15				X	X
16	Copper drainage tube, (DWV), ASTM B 306	X*	X	X*	X	X
17	Wrought copper and wrought alloy solder-joint drainage fittings. ASME B16.29	X	X	X	X	X
18	Cast copper alloy solder joint drainage fittings, DWV, ASME B16.23	X	X	X	X	X
19	Acrylonitrile-Butadiene-Styrene (ABS) plastic drain, waste, and vent pipe and fittings ASTM D 2661, ASTM F 628	X	X	X	X	X
20	Polyvinyl Chloride plastic drain, waste and vent pipe and fittings, ASTM D 2665, ASTM F 891, (Sch 40)	X	X	X	X	X
21	High-silicon content cast iron pipe and fittings (hub and spigot, and mechanical joint), ASTM A 518		X			X

SERVICE:

A - Underground Building Soil, Waste and Storm Drain
B - Aboveground Soil, Waste, Drain In Buildings
C - Underground Vent
D - Aboveground Vent
E - Interior Rainwater Conductors Aboveground
* - Hard Temper

TABLE II
PIPE AND FITTING MATERIALS FOR PRESSURE PIPING SYSTEMS

		SERVICE		
Item No.	Pipe and Fitting Materials	A	B	C
1	Malleable-iron threaded fittings, a. Galvanized, ASME B16.3 for use with Item 4a	X	X	X
2	Grooved pipe couplings, ferrous pipe ASTM A 536 and ASTM A 47, non-ferrous pipe, ASTM A 536 and ASTM A 47	X	X	
3	Ductile iron grooved joint fittings for ferrous pipe ASTM A 536 and ASTM A 47 for use with Item 2	X	X	
4	Steel pipe: a. Seamless, galvanized, ASTM A 53, Type S, Grade B	X	X	X
5	Seamless red brass pipe, ASTM B 43	X	X	X
6	Bronze flanged fittings, ASME B16.24 for use with Item 4	X	X	X
7	Seamless copper pipe, ASTM B 42	X	X	X
8	Seamless copper water tube, ASTM B 88	X**	X**	X***
9	Seamless and welded copper distribution tube (Type D) ASTM B 641	X**	X**	X****
10	Cast bronze threaded fittings, ASME B16.15 for use with Items 7 and 8	X	X	X
11	Wrought copper and bronze solder-joint pressure fittings, ASME B16.22 for use with Items 7 and 8	X	X	X
12	Cast copper alloy solder-joint pressure fittings, ASME B16.18 for use with Items 7 and 8	X	X	X
13	Bronze and sand castings grooved joint pressure fittings for non-ferrous pipe ASTM B 584, for use with Item 2	X	X	
14	Polyethylene (PE) plastic pipe,	X		X

TABLE II
PIPE AND FITTING MATERIALS FOR PRESSURE PIPING SYSTEMS

		SERVICE		
Item No.	Pipe and Fitting Materials	A	B	C
	Schedules 40 and 80, based on outside diameter ASTM D 2447			
15	Polyethylene (PE) plastic pipe (SDR-PR), based on controlled outside diameter, ASTM D 3035	X		X
16	Polyethylene (PE) plastic pipe (SIDR-PR), based on controlled inside diameter, ASTM D 2239	X		X
17	Butt fusion polyethylene (PE) plastic pipe fittings, ASTM D 3261 for use with Items 12, 13, and 16	X		X
18	Socket-type polyethylene fittings for outside diameter-controlled polyethylene pipe, ASTM D 2683 for use with Item 13	X		X
19	Polyethylene (PE) plastic tubing, ASTM D 2737	X		X
20	Chlorinated polyvinyl chloride (CPVC) plastic hot and cold water distribution system, ASTM D 2846	X	X	X
21	Chlorinated polyvinyl chloride (CPVC) plastic pipe, Schedule 40 and 80, ASTM F 441	X		X
22	Chlorinated polyvinyl chloride (CPVC) plastic pipe (SDR-PR) ASTM F 442	X		X
23	Threaded chlorinated polyvinyl chloride (CPVC) plastic pipe fittings, Schedule 80, ASTM F 437, for use with Items 20, and 21	X	X	X
24	Socket-type chlorinated polyvinyl chloride (CPVC) plastic pipe fittings, Schedule 40, ASTM F 438 for use with Item 23	X	X	X
25	Socket-type chlorinated polyvinyl chloride (CPVC) plastic pipe fittings Schedule 80, ASTM F 439 for use with Item 23	X	X	X
26	Polyvinyl chloride (PVC) plastic pipe, Schedules 40, 80, and 120,	X		X

TABLE II
PIPE AND FITTING MATERIALS FOR PRESSURE PIPING SYSTEMS

		SERVICE		
Item No.	Pipe and Fitting Materials	A	B	C
	ASTM D 1785			
27	Polyvinyl chloride (PVC) pressure-rated pipe (SDR Series), ASTM D 2241	X		X
28	Polyvinyl chloride (PVC) plastic pipe fittings, Schedule 40, ASTM D 2466	X		X
29	Socket-type polyvinyl chloride (PVC) plastic pipe fittings, schedule 80, ASTM D 2467	X		X
30	Threaded polyvinyl chloride (PVC) plastic pipe fittings, schedule 80, ASTM D 2464	X		X
31	Joints for IPS pvs pipe using solvent cement, ASTM D 2672	X		X
32	Filament-wound reinforced thermosetting resin (RTRP) pipe, ASTM D 2996	X	X	
33	Steel pipeline flanges, MSS SP-44	X	X	
34	Fittings: brass or bronze; ASME B16.15, and ASME B16.18 ASTM B 828	X	X	
35	Carbon steel pipe unions, socket-welding and threaded, MSS SP-83	X	X	
36	Malleable-iron threaded pipe unions ASME B16.39	X	X	
37	Nipples, pipe threaded ASTM A 733	X	X	

A - Cold Water Aboveground

B - Hot Water 82 degree C Maximum Aboveground

C - Cold Water Service Belowground

Indicated types are minimum wall thicknesses.

** - Type L - Hard

*** - Type K - Hard temper with brazed joints only or type K-soft temper without joints in or under floors

**** - In or under slab floors only brazed joints

TABLE III
STANDARD RATING CONDITIONS AND MINIMUM PERFORMANCE RATINGS FOR WATER HEATING EQUIPMENT

A. STORAGE WATER HEATERS

FUEL	STORAGE CAPACITY LITERS	INPUT RATING	TEST PROCEDURE	REQUIRED PERFORMANCE
Elect.	454 max.	12 kW max.	10 CFR 430	EF = 0.95-0.00132V minimum
Elect.	454 min. OR	12 kW min.	ASHRAE 90.1 (Addenda B)	SL = 1.9 W/0.09 sq. m. maximum

TERMS:

EF = Energy factor, overall efficiency.
ET = Thermal efficiency with 21 degrees C delta T.
EC = Combustion efficiency, 100 percent - flue loss when smoke = 0 (trace is permitted).
SL = Standby loss in W/0.09 sq. m. based on 27 degrees C delta T, or in percent per hour based on nominal 32 degrees C delta T.
HL = Heat loss of tank surface area
V = Storage volume in gallons

-- End of Section --

SECTION 15401

SILVER RECOVERY/EFFLUENT TREATMENT SYSTEM

PART 1 GENERAL

1.1 GENERAL

The Contractor shall furnish all materials, equipment, labor and incidental work necessary for a silver recovery/treatment system as specified herein and as shown on the drawings. Effluents to be treated include spent fixer (combined and bleach), wash water, and developer. The system shall utilize Electrolytic Silver Recovery and Ion exchange process. Treatment methods shall not employ chemical addition.

1.2 DISCHARGE REQUIREMENTS

The degree of treatment required shall be in compliance with Anne Arundel County discharge limits as follows:

a. Monthly Average: Silver - 1.00 mg/l
b. Daily Maximum: 1.00 mg/l

1.3 EFFLUENTS TO BE TREATED

a. Wash water: 960 gallons/day

1.4 SUBMITTALS

Government approval is required for submittals with a "GA" designation; submittals having an "FIO" designation are for information only. The following shall be submitted in accordance with Section 01330 SUBMITTAL PROCEDURES:

SD-01 Data

Performance Data; GA|ED.

Before starting any work, submit performance data to demonstrate successful design and operation of compliance type treatment systems employing electrolytic desilvering and Ion exchange process at other installations for at least two previous years. Furnish location, date of installation, description of application or process, description and quantity of effluents being treated, discharge limit achieved and discharge compliance limits. At least one of the installations shall meet or exceed the discharge limits and capacities indicated in paragraphs 1.2 and 1.3. One manufacturer having 5 years minimum experience shall design, fabricate and install the complete system.

Service Contract; GA|ED.

The Contractor shall provide a service contract for a period of one year upon acceptance and startup of the treatment system. It shall include periodic maintenance, laboratory testing of discharge samples, a complete record of data performance in accordance with Anne Arundel County requirements, replacement parts, and any other incidentals required to

properly operate and maintain the system. The company shall have a minimum of five years experience in providing the services above. The Contractor shall submit experience data and proposed service contract to the Contracting Officer for Government approval before final acceptance of the system.

Spare Parts Data; FIO;AR.

Spare parts data for each different item of materials and equipment specified, after approval of the detail drawings, and not later than 2 months prior to the date of beneficial occupancy. The data shall include a complete list of parts and supplies, with current unit prices and source of supply, and a list of the parts recommended by the manufacturer to be replaced under routine and long term usage.

SD-04 Drawings

Shop Drawings; GA|ED.

Detail drawings, catalog cuts and calculations shall be one integrated submittal and shall consist of illustrations, equipment and piping layout drawings, schedules, performance charts, pump curves, instructions, brochures, diagrams and any other information required to illustrate the system has been coordinated and will function as specified.

SD-06 Instructions

Framed Instructions; FIO;AR.

Framed instructions under glass or laminated plastic, including wiring and control diagrams showing the complete layout of the entire system, shall be posted where directed. Condensed operating instructions explaining preventative maintenance procedures, methods of checking the system for normal safe operation and procedures for safely starting and stopping the system shall be prepared in typed form, also framed under glass or laminated plastic and posted as directed. Proposed diagrams, instructions and other sheets shall be submitted for approval prior to posting. The framing instructions shall be posted before acceptance testing. Information shall be non-fading (ozaloid reproductions not acceptable).

SD-07 Schedules

Training Schedule; FIO;AR.

Arrangements for training shall be made with the Contracting Officer before final acceptance of the installation.

Operation Tests and Startup; GA|ED.

Arrangements and schedule shall be made with the Contracting Officer before completion of the system.

SD-08 Statements

Guarantee; FIO;AR.

The Contractor shall guarantee the system against defective materials and workmanship for a period of one year from the date of completion. If any materials or workmanship prove to be defective within one year, they shall

be replaced or repaired by the Contractor at the Contractor's expense.

SD-09 Reports

Test Reports; FIO;AR.

Test reports in booklet form showing all field tests performed to adjust each component and all field tests performed to prove compliance with the specified performance criteria upon completion and testing of the installed system. The test report shall indicate the final position of all controls.

Operation and Startup Tests Reports; GA|ED.

Submit report to Contracting Officer outlining step by step details, checklist and procedures to be implemented in the tests before final completion of the system. The report shall be used as a guide when conducting the tests.

SD-19 Operation and Maintenance Manuals

Operation and Maintenance; GA|ED.

Six complete copies of the operation manual outlining the step by step procedures required for system startup, operation and shutdown. The manual shall include the manufacturer's name, model number, catalog cuts, diagrams, drawings, parts list, and descriptive data covering the proper operation and testing. Six complete copies of the maintenance manual listing routine maintenance procedures, possible breakdowns and repairs, troubleshooting guides, and simplified diagrams for the system as installed. Each manual shall be bound in a hard cover 3-ring binder. A table of contents shall be included. Editing shall be neatly done by crossing out, highlighting or adding to the standard information.

1.5 VERIFICATION OF DIMENSIONS

The Contractor shall become familiar with all details of the work, verify all dimensions in the field, and shall advise the Contracting Officer of any discrepancy before performing the work.

1.6 DELIVERY AND STORAGE

All equipment placed in storage shall be stored with protection from the weather, humidity and temperature variations, dirt and dust or other contaminants, and in accordance with manufacturers recommendations.

1.7 STANDARD PRODUCTS

Material and equipment shall be the standard products of a manufacturer regularly engaged in the manufacture of the products. Items of equipment shall essentially duplicate equipment that has been in satisfactory use at least 2 years prior to bid opening. Materials and equipment shall be suitable for the intended process and chemicals being treated. Materials and equipment shall be new and free of defects.

1.7.1 Items

Items of equipment performing the same function shall be the products of one manufacturer.

1.8 NAMEPLATES

Equipment shall have the manufacturer's name, address, type or style, model or serial number, and catalog number on a plate secured to the item of equipment.

1.9 PROTECTION FROM MOVING PARTS

Belts, pulleys, chain, couplings, projecting setscrews, keys and other rotating parts located so that any person can come in close proximity thereto shall be fully enclosed or properly guarded. All machine guarding shall conform to OSHA 29 CFR 1910, SUBPART O. Equipment and completed installation shall conform to OSHA GENERAL INDUSTRY STANDARDS 29 CFR 1910.

1.10 ALARMS

The holding tank shall be provided with a high level sensor to provide remote alarms. Alarms shall be audible. Remote alarm location shall be determined by the user and approved by the Contracting Officer.

1.11 BACKUP SYSTEMS

A backup resin column shall be furnished.

1.12 TREATMENT PROCESS

1.12.1 Wash Water

Wash water to be collected in holding tanks, from which it will be pumped through Ion exchange resin contained in pressure columns to a floor sink.

1.13 ELECTRICAL REQUIREMENTS

Equipment to utilize 115 VAC/1 ph/60 Hz power from dedicated circuits, fused at 20 amps (except power to transfer pumps, fused at 30 amps). System to be accommodated by a 60 amp control panel.

1.14 PIPING

Piping and appurtenances shall conform to Section 15400 PLUMBING, GENERAL PURPOSE.

1.15 ELECTRICAL

Electrical work shall conform to Section 16415 ELECTRICAL WORK, INTERIOR.

PART 2 PRODUCTS

2.1 Exchange Cartridges

Provide four exchange cartridges, use two for the process and two as backup. The cartridges shallbe capable of handling 4 gpm and consistently desilver below 1.0 ppm. The cartridges shall be capable of being sent out for repacking and refining. Each cartridge shall be equipped with a pressure reducing valve and dripless quick disconnects.

2.2 Biocide Packs

Provide 30 biocide packs design to be used in the holding tank to reduce

biological slime and odor. The packs should be designed for photo processing. Holders shall be provided to hold the pack from moving parts.

2.3 TRANSFER PUMP STATION

The pump station should include the following:

a. (1) holding tank, 10 gallon minimum with float switches and high load alarm.
b. (1) pump, 4 gpm, at 20 foot head minimum, 115 V, 60 cy and 1 ph.
c. Flow Meter.
d. Controller.
e. Power Indicator.

2.4 REMOTE ALARM PANEL

Remote alarm panel for trouble indication of high water level. Install visual and audible alarm.

PART 3 EXECUTION

3.1 TRAINING

The Contractor shall conduct a training course for personnel as designated by the Contracting Officer. The training time shall consist of a total of 40 hours of normal working time and shall start after the system is functionally completed. Training shall cover all of the items contained in the operation and maintenance manuals, as well as demonstrations of routine maintenance operations and sample collection.

3.2 MANUFACTURER'S SERVICES

The Contractor shall obtain the services of the manufacturer's process engineer with a minimum of 2 years experience in the installation, adjustment, startup and operation of the equipment/systems specified. The representative shall supervise the installation, system adjustment, startup and testing of the equipment/systems. Services shall comprise a minimum of 32 working hours. Process engineer shall be on-site for the startup period. Process engineer shall direct startup.

3.3 OPERATIONAL TEST AND STARTUP

After the equipment has been installed and pre-tested by the process engineer, the Contractor shall arrange an operational system test as directed by the Contracting Officer. All controls, equipment and alarms shall be tested and then an operational test shall be conducted to assure that the system functions properly under all possible conditions and meets the discharge limits specified herein.

-- End of Section --

SECTION 15488

GAS PIPING SYSTEMS

PART 1 GENERAL

1.1 REFERENCES

The publications listed below form a part of this specification to the extent referenced. The publications are referred to in the text by basic designation only.

AMERICAN PETROLEUM INSTITUTE (API)

API Spec 6D	(1994) Specification for Pipeline Valves (Gate, Plug, Ball, and Check Valves)

AMERICAN SOCIETY OF MECHANICAL ENGINEERS (ASME)

ASME B1.20.1	(1983; R 1992) Pipe Threads, General Purpose (Inch)
ASME B16.3	(1992) Malleable Iron Threaded Fittings
ASME B16.5	(1988; Errata Oct 88; B16.5a) Pipe Flanges and Flanged Fittings
ASME B16.9	(1993) Factory-Made Wrought Steel Buttwelding Fittings
ASME B16.11	(1991) Forged Fittings, Socket-Welding and Threaded
ASME B16.21	(1992) Nonmetallic Flat Gaskets for Pipe Flanges
ASME B16.33	(1990) Manually Operated Metallic Gas Valves for Use in Gas Piping Systems Up to 125 psig (Sizes 1/2 through 2)
ASME B31.1	(1995) Power Piping
ASME B31.2	(1968) Fuel Gas Piping
ASME B36.10M	(1985; R 1994) Welded and Seamless Wrought Steel Pipe
ASME BPV IX	(1995; Addenda Dec 1995) Boiler and Pressure Vessel Code; Section IX, Welding and Brazing Qualifications

MANUFACTURERS STANDARDIZATION SOCIETY OF THE VALVE AND FITTINGS INDUSTRY (MSS)

MSS SP-25	(1993) Standard Marking System for Valves, Fittings, Flanges and Unions

MSS SP-58	(1993) Pipe Hangers and Supports - Materials, Design and Manufacture
MSS SP-69	(1991) Pipe Hangers and Supports - Selection and Application

NATIONAL FIRE PROTECTION ASSOCIATION (NFPA)

NFPA 54	(1992) National Fuel Gas Code
NFPA 70	(1996) National Electrical Code

UNDERWRITERS LABORATORIES (UL)

UL-06	(1994; Supple; Rev thru March 1996)Gas and Oil Equipment Directory

1.2 GENERAL REQUIREMENTS

1.2.1 Welding

Piping shall be welded in accordance with qualified procedures using performance qualified welders and welding operators. Procedures and welders shall be qualified in accordance with ASME BPV IX. Welding procedures qualified by others, and welders and welding operators qualified by another employer may be accepted as permitted by ASME B31.1. The Contracting Officer shall be notified at least 24 hours in advance of tests and the tests shall be performed at the work site if practicable. The Contracting Officer shall be furnished with a copy of qualified procedures and a list of names and identification symbols of qualified welders and welding operators. The welder or welding operator shall apply his assigned symbol near each weld he makes as a permanent record. Structural members shall be welded in accordance with Section 05055 WELDING, STRUCTURAL.

1.2.2 Standard Products

Materials and equipment shall be the standard products of a manufacturer regularly engaged in the manufacture of the products and shall essentially duplicate items that have been in satisfactory use for at least 2 years prior to bid opening. Asbestos or products containing asbestos shall not be used. Manufacturer's descriptive data and installation instructions shall be submitted for approval for compression-type mechanical joints used in joining dissimilar materials and for insulating joints. Valves, flanges and fittings shall be marked in accordance with MSS SP-25.

1.2.3 Verification of Dimensions

The Contractor shall become familiar with all details of the work, verify all dimensions in the field, and shall advise the Contracting Officer of any discrepancy before performing the work.

1.3 SUBMITTALS

Government approval is required for submittals with a "GA" designation; submittals having an "FIO" designation are for information only. The following shall be submitted in accordance with Section 01330 SUBMITTAL PROCEDURES:

SD-01 Data

Qualifications; FIO;AR.

Qualified procedures and a list of names and identification symbols of qualified welders and welding operators.

SD-04 Drawings

Gas Piping System; FIO;AR.

Drawings showing location, size and all branches of pipeline; location of all required shutoff valves; and instructions necessary for the installation of connectors and supports.

PART 2 PRODUCTS

2.1 PIPE AND FITTINGS

2.1.1 Steel Pipe, Joints, and Fittings

Steel pipe shall conform to ASME B36.10M. Malleable-iron threaded fittings shall conform to ASME B16.3. Steel pipe flanges and flanged fittings including bolts, nuts, and bolt pattern shall be in accordance with ASME B16.5. Wrought steel buttwelding fittings shall conform to ASME B16.9. Socket welding and threaded forged steel fittings shall conform to ASME B16.11.

2.1.2 Sealants for Steel Pipe Threaded Joints

Joint sealing compound shall be listed in UL-06, Class 20 or less. Tetrafluoroethylene tape shall conform to UL-06.

2.1.3 Identification

Pipe flow markings and metal tags shall be provided as required.

2.1.4 Flange Gaskets

Gaskets shall be nonasbestos compressed material in accordance with ASME B16.21, 1.6 mm (1/16 inch) thickness, full face or self-centering flat ring type. The gaskets shall contain aramid fibers bonded with styrene butadiene rubber (SBR) or nitrile butadiene rubber (NBR) suitable for a maximum 316 degrees C (600 degrees F) service. NBR binder shall be used for hydrocarbon service.

2.1.5 Pipe Threads

Pipe threads shall conform to ASME B1.20.1.

2.1.6 Escutcheons

Escutcheons shall be chromium-plated steel or chromium-plated brass, either one piece or split pattern, held in place by internal spring tension or set screw.

2.1.7 Insulating Pipe Joints

2.1.7.1 Insulating Joint Material

Insulating joint material shall be provided between flanged or threaded metallic pipe systems where shown to control galvanic or electrical action.

2.1.7.2 Threaded Pipe Joints

Joints for threaded pipe shall be steel body nut type dielectric unions with insulating gaskets.

2.1.7.3 Flanged Pipe Joints

Joints for flanged pipe shall consist of full face sandwich-type flange insulating gasket of the dielectric type, insulating sleeves for flange bolts, and insulating washers for flange nuts.

2.2 VALVES

Valves shall be suitable for shutoff or isolation service and shall conform to the following:

2.2.1 Valves 50 mm (2 Inches) and Smaller

Valves 50 mm (2 inches) and smaller shall conform to ASME B16.33 and shall be of materials and manufacture compatible with system materials used.

2.2.2 Valves 65 mm (2-1/2 Inches) and Larger

Valves 65 mm (2-1/2 inches) and larger shall be carbon steel conforming to API Spec 6D, Class 150.

2.3 PIPE HANGERS AND SUPPORTS

Pipe hangers and supports shall conform to MSS SP-58 and MSS SP-69.

2.4 METERS, REGULATORS AND SHUTOFF VALVES

Meters, regulators and shutoff valves shall be as specified in Section 02685 GAS DISTRIBUTION SYSTEM.

PART 3 EXECUTION

3.1 EXCAVATION AND BACKFILLING

Earthwork shall be as specified in Section 02222 EXCAVATION, TRENCHING AND BACKFILLING FOR UTILITIES SYSTEMS.

3.2 GAS PIPING SYSTEM

Gas piping system shall be from the point of delivery, defined as the outlet of the meter set assembly, service regulator and shutoff valve, specified in Section 02685 GAS DISTRIBUTION SYSTEM, to the connections to each gas utilization device.

3.2.1 Protection of Materials and Components

Pipe and tube openings shall be closed with caps or plugs during installation. Equipment shall be protected from dirt, water, and chemical or mechanical damage. At the completion of all work, the entire system shall be thoroughly cleaned.

3.2.2 Workmanship and Defects

Piping, tubing and fittings shall be clear and free of cutting burrs and defects in structure or threading and shall be thoroughly brushed and chip-and scale-blown. Defects in piping, tubing or fittings shall not be repaired. When defective piping, tubing, or fittings are located in a system, the defective material shall be replaced.

3.3 PROTECTIVE COVERING

3.3.1 Underground Metallic Pipe

Buried metallic piping shall be protected from corrosion with protective coatings as specified in Section 02685 GAS DISTRIBUTION SYSTEM. When dissimilar metals are joined underground, gastight insulating fittings shall be used.

3.3.2 Aboveground Metallic Piping Systems

3.3.2.1 Ferrous Surfaces

Shop primed surfaces shall be touched up with ferrous metal primer. Surfaces that have not been shop primed shall be solvent cleaned. Surfaces that contain loose rust, loose mill scale and other foreign substances shall be mechanically cleaned by power wire brushing and primed with ferrous metal primer. Primed surface shall be finished with two coats of exterior oil paint.

3.4 INSTALLATION

Installation of the gas system shall be in conformance with the manufacturer's recommendations and applicable provisions of NFPA 54, and as indicated. Pipe cutting shall be done without damage to the pipe. Unless otherwise authorized, cutting shall be done by an approved type of mechanical cutter. Wheel cutters shall be used where practicable. On steel pipe 150 mm (6 inches) and larger, an approved gas cutting and beveling machine may be used.

3.4.1 Metallic Piping Installation

Underground piping shall be buried a minimum of 450 mm below grade. Changes in direction of piping shall be made with fittings only; mitering or notching pipe to form elbows and tees or other similar type construction will not be permitted. Branch connection may be made with either tees or forged branch outlet fittings. Branch outlet fittings shall be forged, flared for improvement of flow where attached to the run, and reinforced against external strains.

3.4.2 Metallic Tubing Installation

Metallic tubing shall be installed using gas tubing fittings approved by the tubing manufacturer. Branch connections shall be made with tees. All tubing end preparation shall be made with tools designed for the purpose. Aluminum alloy tubing shall not be used in exterior locations or underground.

3.4.3 Concealed Piping in Buildings

When installing piping which is to be concealed, unions, tubing fittings, running threads, right- and left-hand couplings, bushings, and swing joints made by combinations of fittings shall not be used.

3.4.3.1 Piping in Partitions

Concealed piping shall be located in hollow rather than solid partitions. Tubing passing through walls or partitions shall be protected against physical damage.

3.4.3.2 Piping in Floors

Piping in solid floors shall be laid in channels suitably covered to permit access to the piping with minimum damage to the building.

3.4.4 Aboveground Piping

Aboveground piping shall be run as straight as practicable along the alignment indicated and with a minimum of joints. Piping shall be separately supported. Exposed horizontal piping shall not be installed farther than 150 mm from nearest parallel wall in laundry areas where clothes hanging could be attempted.

3.4.5 Final Gas Connections

Unless otherwise specified herein, final connections shall be made with rigid metallic pipe and fittings. Provide accessible gas shutoff valve and coupling for each gas equipment item.

3.5 PIPE JOINTS

Pipe joints shall be designed and installed to effectively sustain the longitudinal pull-out forces caused by contraction of the piping or superimposed loads.

3.5.1 Threaded Metallic Joints

Threaded joints in metallic pipe shall have tapered threads evenly cut and shall be made with UL approved graphite joint sealing compound for gas service or tetrafluoroethylene tape applied to the male threads only. Threaded joints up to 40 mm in diameter may be made with approved tetrafluoroethylene tape. Threaded joints up to 50 mm in diameter may be made with approved joint sealing compound. After cutting and before threading, pipe shall be reamed and burrs shall be removed. Caulking of threaded joints to stop or prevent leaks shall not be permitted.

3.5.2 Welded Metallic Joints

Beveling, alignment, heat treatment, and inspection of welds shall conform to ASME B31.2. Weld defects shall be removed and repairs made to the weld, or the weld joints shall be entirely removed and rewelded. After filler metal has been removed from its original package, it shall be protected or stored so that its characteristics or welding properties are not affected adversely. Electrodes that have been wetted or have lost any of their coating shall not be used.

3.5.3 Flared Metallic Tubing Joints

Flared joints in metallic tubing shall be made with special tools

recommended by the tubing manufacturer. Flared joints shall be used only in systems constructed from nonferrous pipe and tubing, when experience or tests have demonstrated that the joint is suitable for the conditions, and when adequate provisions are made in the design to prevent separation of the joints. Metallic ball sleeve compression-type tubing fittings shall not be used for tubing joints.

3.5.4 Solder or Brazed Joints

Joints in metallic tubing and fittings shall be made with materials and procedures recommended by the tubing supplier. Joints shall be brazed with material having a melting point above 538 degrees C (1000 degrees F). Brazing alloys shall not contain phosphorous.

3.6 PIPE SLEEVES

Pipes passing through concrete or masonry walls or concrete floors or roofs shall be provided with pipe sleeves fitted into place at the time of construction. Sleeves shall not be installed in structural members except where indicated or approved. All rectangular and square openings shall be as detailed. Each sleeve shall extend through its respective wall, floor or roof, and shall be cut flush with each surface, except in mechanical room floors not located on grade where clamping flanges or riser pipe clamps are used. Sleeves in mechanical room floors above grade shall extend at least 100 mm above finish floor. Unless otherwise indicated, sleeves shall be large enough to provide a minimum clearance of 6.4 mm all around the pipe. Sleeves in bearing walls, waterproofing membrane floors, and wet areas shall be steel pipe. Sleeves in nonbearing walls, floors, or ceilings may be steel pipe, galvanized sheet metal with lock-type longitudinal seam, or moisture-resistant fiber or plastic. For penetrations of fire walls, fire partitions and floors which are not on grade, the annular space between the pipe and sleeve shall be sealed with firestopping material and sealant that meet the requirement of Section 07270 FIRESTOPPING.

3.7 PIPES PENETRATING WATERPROOFING MEMBRANES

Pipes penetrating waterproofing membranes shall be installed as specified in Section 15400 PLUMBING, GENERAL PURPOSE.

3.8 FIRE SEAL

Penetrations of fire rated partitions, walls and floors shall be in accordance with Section 07270 FIRESTOPPING.

3.9 ESCUTCHEONS

Escutcheons shall be provided for all finished surfaces where gas piping passes through floors, walls, or ceilings except in boiler, utility, or equipment rooms.

3.10 SPECIAL REQUIREMENTS

Drips, grading of the lines, freeze protection, and branch outlet locations shall be as shown and shall conform to the requirements of NFPA 54.

3.11 BUILDING STRUCTURE

Building structure shall not be weakened by the installation of any gas

piping. Beams or joists shall not be cut or notched.

3.12 PIPING SYSTEM SUPPORTS

Gas piping systems in buildings shall be supported with pipe hooks, metal pipe straps, bands or hangers suitable for the size of piping or tubing. Gas piping system shall not be supported by other piping. Spacing of supports in gas piping and tubing installations shall conform to the requirements of NFPA 54. The selection and application of supports in gas piping and tubing installations shall conform to the requirements of MSS SP-69. In the support of multiple pipe runs on a common base member, a clip or clamp shall be used where each pipe crosses the base support member. Spacing of the base support members shall not exceed the hanger and support spacing required for any of the individual pipes in the multiple pipe run. The clips or clamps shall be rigidly connected to the common base member. A clearance of 3.2 mm shall be provided between the pipe and clip or clamp for all piping which may be subjected to thermal expansion.

3.13 ELECTRICAL BONDING AND GROUNDING

A gas piping system within a building shall be electrically continuous and bonded to a grounding electrode as required by NFPA 70.

3.14 SHUTOFF VALVE

Main gas shutoff valve controlling the gas piping system shall be easily accessible for operation and shall be installed as indicated, protected from physical damage, and marked with a metal tag to clearly identify the piping system controlled.

3.15 CATHODIC PROTECTION

Cathodic protection shall be provided for underground ferrous gas piping as specified in Section 13110 CATHODIC PROTECTION SYSTEM SACRIFICIAL ANODE.

3.16 TESTING

Before any section of a gas piping system is put into service, it shall be carefully tested to assure that it is gastight. Prior to testing, the system shall be blown out, cleaned and cleared of all foreign material. Each joint shall be tested by means of an approved gas detector, soap and water, or an equivalent nonflammable solution. Testing shall be completed before any work is covered, enclosed, or concealed. All testing of piping systems shall be done with due regard for the safety of employees and the public during the test. Bulkheads, anchorage and bracing suitably designed to resist test pressures shall be installed if necessary. Oxygen shall not be used as a testing medium.

3.16.1 Pressure Tests

Before appliances are connected, piping systems shall be filled with air or an inert gas and shall withstand a minimum pressure of 21 kPa (3 psi) gauge for a period of not less than 10 minutes as specified in NFPA 54 without showing any drop in pressure. Oxygen shall not be used. Pressure shall be measured with a mercury manometer, slope gauge, or an equivalent device so calibrated as to be read in increments of not greater than 1 kPa (0.1 pound). The source of pressure shall be isolated before the pressure tests are made.

3.16.2 Test With Gas

Before turning gas under pressure into any piping, all openings from which gas can escape shall be closed. Immediately after turning on the gas, the piping system shall be checked for leakage by using a laboratory-certified gas meter, an appliance orifice, a manometer, or equivalent device. All testing shall conform to the requirements of NFPA 54. If leakage is recorded, the gas supply shall be shut off, the leak shall be repaired, and the tests repeated until all leaks have been stopped.

3.16.3 Purging

After testing is completed, and before connecting any appliances, all gas piping shall be fully purged. LPG piping tested using fuel gas with appliances connected does not require purging. Piping shall not be purged into the combustion chamber of an appliance. The open end of piping systems being purged shall not discharge into confined spaces or areas where there are ignition sources unless the safety precautions recommended in NFPA 54 are followed.

3.16.4 Labor, Materials and Equipment

All labor, materials and equipment necessary for conducting the testing and purging shall be furnished by the Contractor.

-- End of Section --

SECTION 15569

WATER HEATING; GAS; UP TO 20 MBTUH

PART 1 GENERAL

1.1 REFERENCES

The publications listed below form a part of this specification to the extent referenced. The publications are referred to in the text by basic designation only.

AIR MOVEMENT AND CONTROL ASSOCIATION (AMCA)

AMCA 801	(1992) Industrial Process/Power Generation Fans: Specification Guidelines

AMERICAN NATIONAL STANDARDS INSTITUTE (ANSI)

ANSI Z21.13	(1991; Z21.13a; Z21.13b) Gas-Fired Low-Pressure Steam and Hot Water Boilers

AMERICAN SOCIETY FOR TESTING AND MATERIALS (ASTM)

ASTM A 47	(1990; R 1995) Ferritic Malleable Iron Castings
ASTM A 53	(1996) Pipe, Steel, Black and Hot-Dipped, Zinc-Coated Welded and Seamless
ASTM A 105/A 105M	(1996) Carbon Steel Forgings, for Piping Applications
ASTM A 106	(1995) Seamless Carbon Steel Pipe for High-Temperature Service
ASTM A 167	(1996) Stainless and Heat-Resisting Chromium-Nickel Steel Plate, Sheet, and Strip
ASTM A 183	(1983; R 1990) Carbon Steel Track Bolts and Nuts
ASTM A 193/A 193M	(1996) Alloy-Steel and Stainless Steel Bolting Materials for High-Temperature Service
ASTM A 234/A 234M	(1996b) Piping Fittings of Wrought Carbon Steel and Alloy Steel for Moderate and Elevated Temperatures
ASTM A 366/A 366M	(1996) Steel, Sheet, Carbon, Cold-Rolled, Commercial Quality
ASTM A 515/A 515M	(1992) Pressure Vessel Plates, Carbon Steel, for Intermediate- and

	Higher-Temperature Service
ASTM A 516/A 516M	(1990; R 1996) Pressure Vessel Plates, Carbon Steel, for Moderate- and Lower-Temperature Service
ASTM A 536	(1984; R 1993) Ductile Iron Castings
ASTM A 653/A 653M	(1996) Steel Sheet, Zinc-Coated (Galvanized) or Zinc-Iron Alloy-Coated (Galvannealed) by the Hot-Dip Process
ASTM B 32	(1996) Solder Metal
ASTM B 62	(1993) Composition Bronze or Ounce Metal Castings
ASTM B 75	(1995a) Seamless Copper Tube
ASTM B 88	(1996) Seamless Copper Water Tube
ASTM B 813	(1993) Liquid and Paste Fluxes for Soldering Applications of Copper and Copper Alloy Tube
ASTM B 828	(1992) Making Capillary Joints by Soldering of Copper and Copper Alloy Tube and Fittings
ASTM C 27	(1993) Fireclay and High-Alumina Refractory Brick
ASTM C 34	(1996) Structural Clay Load-Bearing Wall Tile
ASTM C 155	(1988; R 1992) Classification of Insulating Firebrick
ASTM C 401	(1991; R 1995) Alumina and Alumina Silicate Castable Refractories
ASTM D 596	(1991; R 1995) Reporting Results of Analysis of Water
ASTM D 2000	(1996) Rubber Products in Automotive Applications
ASTM F 1097	(1991) Mortar, Refractory (High-Temperature, Air-Setting)

AMERICAN SOCIETY OF MECHANICAL ENGINEERS (ASME)

ASME B1.20.1	(1983; R 1992) Pipe Threads, General Purpose (Inch)
ASME B16.3	(1992) Malleable Iron Threaded Fittings
ASME B16.4	(1992) Gray Iron Threaded Fittings

ASME B16.5	(1996) Pipe Flanges and Flanged Fittings NPS 1/2 thru NPS 24
ASME B16.9	(1993) Factory-Made Wrought Steel Buttwelding Fittings
ASME B16.11	(1991) Forged Fittings, Socket-Welding and Threaded
ASME B16.15	(1985; R 1994) Cast Bronze Threaded Fittings Classes 125 and 250
ASME B16.18	(1984; R 1994) Cast Copper Alloy Solder Joint Pressure Fittings
ASME B16.21	(1992) Nonmetallic Flat Gaskets for Pipe Flanges
ASME B16.22	(1995) Wrought Copper and Copper Alloy Solder Joint Pressure Fittings
ASME B16.26	(1988) Cast Copper Alloy Fittings for Flared Copper Tubes
ASME B16.34	(1988) Valves - Flanged, Threaded, and Welding End
ASME B16.39	(1986; R 1994) Malleable Iron Threaded Pipe Unions Classes 150, 250, and 300
ASME B31.1	(1995; B31.1a; B31.1b) Power Piping
ASME B31.5	(1992; B31.5a) Refrigeration Piping
ASME B40.1	(1991) Gauges - Pressure Indicating Dial Type - Elastic Element
ASME BPV IV	(1995; Addenda Dec 1995, Dec 1996) Boiler and Pressure Vessel Code; Section IV, Heating Boilers
ASME BPV VIII Div 1	(1995; Addenda Dec 1995, Dec 1996) Boiler and Pressure Vessel Code; Section VIII, Pressure Vessels Division 1 - Basic Coverage
ASME BPV IX	(1995; Addenda Dec 1995, Dec 1996) Boiler and Pressure Vessel Code; Section IX, Welding and Brazing Qualifications
ASME CSD-1	(1992; CSD-1a; CSD-1b) Controls and Safety Devices for Automatically Fired Boilers

AMERICAN WATER WORKS ASSOCIATION (AWWA)

AWWA C606	(1987) Grooved and Shouldered Joints

AMERICAN WELDING SOCIETY (AWS)

AWS A5.8	(1992) Filler Metals for Brazing and Braze Welding
AWS B2.2	(1991) Brazing Procedure and Performance Qualification

COMMERCIAL ITEM DESCRIPTIONS (CID)

CID A-A-1419	(Rev D) Filter Element, Air Conditioning (Viscous-Impingement and Dry Types, Replaceable)

COPPER DEVELOPMENT ASSOCIATION (CDA)

CDA-02	(1995) Copper Tube Handbook

HYDRONICS INSTITUTE (HYI)

HYI-01	(1997) I=B=R Ratings for Boilers, Baseboard Radiation and Finned Tube (Commercial) Radiation

MANUFACTURERS STANDARDIZATION SOCIETY OF THE VALVE AND FITTINGS INDUSTRY (MSS)

MSS SP-25	(1993) Standard Marking System for Valves, Fittings, Flanges and Unions
MSS SP-58	(1993) Pipe Hangers and Supports - Materials, Design and Manufacture
MSS SP-69	(1996) Pipe Hangers and Supports - Selection and Application
MSS SP-70	(1990) Cast Iron Gate Valves, Flanged and Threaded Ends
MSS SP-71	(1990) Cast Iron Swing Check Valves, Flanges and Threaded Ends
MSS SP-72	(1992) Ball Valves with Flanged or Butt-Welding Ends for General Service
MSS SP-73	(1991; R 1996) Brazing Joints for Copper and Copper Alloy Pressure Fittings
MSS SP-78	(1987; R 1992) Cast Iron Plug Valves, Flanged and Threaded Ends
MSS SP-80	(1997) Bronze Gate, Globe, Angle and Check Valves
MSS SP-85	(1994) Cast Iron Globe & Angle Valves, Flanged and Threaded Ends
MSS SP-110	(1996) Ball Valves Threaded, Socket Welding, Solder Joint, Grooved and Flared Ends

NATIONAL ELECTRICAL MANUFACTURERS ASSOCIATION (NEMA)

NEMA 250	(1991) Enclosures for Electrical Equipment (1000 Volts Maximum)

NATIONAL FIRE PROTECTION ASSOCIATION (NFPA)

NFPA 54	(1996; Errata) National Fuel Gas Code
NFPA 211	(1996) Chimneys, Fireplaces, Vents, and Solid Fuel-Burning Appliances
NFPA 8501	(1992) Single Burner Boiler Operations

UNDERWRITERS LABORATORIES (UL)

UL Gas&Oil Dir	(1997) Gas and Oil Equipment Directory
UL 795	(1994) Rev Jan 1996)Commercial-Industrial Gas Heating Equipment

1.2 GENERAL REQUIREMENTS

1.2.1 Standard Products

Materials and equipment shall be the standard products of a manufacturer regularly engaged in the manufacture of the products and shall essentially duplicate items that have been in satisfactory use for at least 2 years prior to bid opening. Equipment shall be supported by a service organization that is, in the opinion of the Contracting Officer, reasonably convenient to the site.

1.2.2 Asbestos Prohibition

Asbestos and asbestos-containing products shall not be used.

1.2.3 Nameplates

Each major component of equipment shall have the manufacturer's name, address, type or style, model or serial number, and catalog number on a plate secured to the equipment. Each pressure vessel shall have an approved ASME stamp.

1.2.4 Equipment Guards

Belts, pulleys, chains, gears, couplings, projecting setscrews, keys, and other rotating parts exposed to personnel contact shall be fully enclosed or guarded in accordance with OSHA requirements. High temperature equipment and piping exposed to contact by personnel or where it creates a potential fire hazard shall be properly guarded or covered with insulation of a type specified. Catwalks, operating platforms, ladders, and guardrails shall be provided where shown and shall be constructed in accordance with Section 05500 MISCELLANEOUS METAL.

1.2.5 Verification of Dimensions

The Contractor shall become familiar with details of the work, verify dimensions in the field, and shall advise the Contracting Officer of any discrepancy before performing any work or ordering any materials.

1.2.6 Welding

Boilers and piping shall be welded and brazed in accordance with qualified procedures using performance-qualified welders and welding operators. Procedures and welders shall be qualified in accordance with ASME BPV IX. Welding procedures qualified by others, and welders and welding operators qualified by another employer may be accepted as permitted by ASME B31.1. The Contracting Officer shall be notified 24 hours in advance of tests, and the tests shall be performed at the work site if practical. The welder or welding operator shall apply his assigned symbol near each weld he makes as a permanent record. Structural members shall be welded in accordance with Section 05055 WELDING, STRUCTURAL.

1.3 SUBMITTALS

Government approval is required for submittals with a "GA" designation; submittals having an "FIO" designation are for information only. The following shall be submitted in accordance with Section 01330 SUBMITTAL PROCEDURES:

SD-01 Data

Manufacturer's Catalog Data; GA|ED.

Manufacturer's catalog data shall be included with the detail drawings for the following items:

Boilers
Fuel Burning Equipment
Combustion Control Equipment
Pumps
Fittings and Accessories
Water Treatment System

The data shall show model, size, options, etc., that are intended for consideration. Data submitted shall be adequate to demonstrate compliance with contract requirements.

Spare Parts Data; FIO;AR.

Spare parts data for each different item of material and equipment, after approval of the detail drawings and no later than 2 months prior to the date of beneficial occupancy. The data shall include a complete list of parts and supplies, with current unit prices and source of supply, and a list of the parts recommended by the manufacturer to be replaced after 1 and 3 years of service.

Water Treatment Plan; FIO;AR.

Six complete copies of the proposed water treatment plan. The plan shall include a layout, control scheme, a list of the existing water conditions including the items listed in paragraph BOILER WATER TREATMENT, a list of all chemicals, the proportion of chemicals to be added, the final treated water conditions, and a description of environmental concerns for handling the chemicals.

Heating and Fuel Systems Test Procedures; FIO;AR.

Proposed test procedures for the heating system tests and fuel system tests, at least 2 weeks prior to the start of related testing.

Welding Procedures; FIO;AR.

A copy of qualified welding procedures, at least 2 weeks prior to the start of welding operations.

Qualification; FIO;AR.

A statement from the firms proposed to prepare submittals and perform installation and testing, demonstrating successful completion of similar services of at least five projects of similar size or scope, at least 2 weeks prior to the submittal of any other item required by this section.

Welding Qualification; FIO;AR.

A list of names and identification symbols of qualified welders and welding operators, at least 2 weeks prior to the start of welding operations.

SD-04 Drawings

Heating System; GA|ED.

Detail drawings consisting of equipment layout including installation details and electrical connection diagrams; combustion and safety control diagrams; ductwork layout showing the location of supports and hangers, typical hanger details, gauge reinforcement, reinforcement spacing rigidity classification, and static pressure and seal classifications; and piping layout showing the location of guides and anchors, the load imposed on each support or anchor, and typical support details. Drawings shall include any information required to demonstrate that the system has been coordinated and will properly function as a unit and shall show equipment relationship to other parts of the work, including clearances required for operation and maintenance.

SD-06 Instructions

Posted Instructions; FIO;AR.

System layout diagrams that show the layout of equipment, piping, and ductwork and typed condensed operation manuals explaining preventative maintenance procedures, methods of checking the system for normal, safe operation, and procedures for safely starting and stopping the system, framed under glass or laminated plastic, at least 2 weeks prior to the start of related testing. After approval, these items shall be posted where directed.

SD-07 Schedules

Tests; FIO;AR.

Proposed test schedules for the heating system and fuel system tests, at least 2 weeks prior to the start of related testing.

SD-09 Reports

Heating System and Fuel System Tests; GA|ED.

Test reports for the heating system tests and the fuel system test, upon completion of testing complete with results.

Water Treatment Tests; FIO;AR.

(1) The water quality test report shall identify the chemical composition of the boiler water. The report shall include a comparison of the condition of the boiler water with the manufacturer's recommended conditions. Any required corrective action shall be documented within the report.

(2) A test report shall identify the condition of the boiler at the completion of 1 year of service. The report shall include a comparison of the condition of the boiler with the manufacturer's recommended operating conditions.

SD-13 Certificates

Bolts; FIO;AR.

Written certification by the bolt manufacturer that the bolts furnished comply with the requirements of this specification. The certification shall include illustrations of product markings, the date of manufacture, and the number of each type of bolt to be furnished based on this certification.

Boiler Emissions; FIO;AR.

Written certification by the boiler manufacturer that each boiler furnished complies with Federal, state, and local regulations for emissions. The certification shall also include a description of applicable emission regulations. If any boiler is exempt from the emission regulations, the certification shall indicate the reason for the exemption.

SD-19 Operation and Maintenance Manuals

Heating System; FIO;AR.

Six complete manuals listing step-by-step procedures required for system startup, operation, shutdown, and routine maintenance, at least 2 weeks prior to field training. The manuals shall include the manufacturer's name, model number, parts list, simplified wiring and control diagrams, troubleshooting guide, and recommended service organization (including address and telephone number) for each item of equipment. Each service organization shall be capable of providing 4 hour onsite response to a service call on an emergency basis.

Water Treatment System; FIO;AR.

Six complete copies of operating and maintenance manuals for the step-by-step water treatment procedures, including procedures for testing the water quality.

1.4 MANUFACTURER'S SERVICES

Services of a manufacturer's representative who is experienced in the installation, adjustment, and operation of the equipment specified shall be provided. The representative shall supervise the installing, adjusting, and testing of the equipment.

1.5 DELIVERY AND STORAGE

Equipment delivered and placed in storage shall be protected from the weather, humidity and temperature variations, dirt and dust, and other contaminants.

PART 2 PRODUCTS

2.1 BOILERS

Each boiler shall have the output capacity in kilowatts (kW) as indicated when fired with the specified fuels. The boiler shall be furnished complete with the gas burning equipment, boiler fittings and trim, automatic controls, forced draft fan, electrical wiring, insulation, piping connections, and protective jacket. The boiler shall be completely assembled and tested at the manufacturer's plant. Boiler auxiliaries including fans, motors, drives, and similar equipment shall be provided with at least 10 percent excess capacity to allow for field variations in settings and to compensate for any unforeseen increases in pressure losses in appurtenant piping and ductwork. However, the boiler safety devices shall not be sized for a 10 percent excess capacity. The boiler and its accessories shall be designed and installed to permit ready accessibility for operation, maintenance, and service. Boilers shall be designed, constructed, and equipped in accordance with ASME BPV IV. Each boiler shall be of the cast iron type and designed for water service as specified herein. The boiler capacity shall be based on the ratings shown in HYI-01 or as certified by the American Boiler Manufacturers Association, or American Gas Association.

2.1.1 Cast Iron Boiler

Boiler shall be of the rectangular, sectional type, self-contained, packaged type, complete with accessories, mounted on a structural steel base. Cast iron sections shall be free of leaks under all operating conditions. Access shall be provided to permit cleaning of internal tube surfaces.

2.1.2 Hot Water Heating Boilers

The hot water heating boiler shall be capable of operating at the specified maximum continuous capacity without damage or deterioration to the boiler, its setting, firing equipment, or auxiliaries. The rated capacity shall be the capacity at which the boiler will operate continuously while maintaining at least the specified minimum efficiency. The boiler design conditions shall be as follows:

a. Boiler design pressure 200 kPa.

b. Operating pressure at boiler outlet 175 kPa.

c. Hot water temperature 82 degrees C.

d. Temperature differential between boiler discharge and system return 22 degrees C.

e. Outdoor ambient air temperature 18 degrees C (max), -11.7 degrees C (min).

f. Site elevation 46 m.

g. Rated capacity see the contract drawings.

h. Maximum exhaust stack temperature 320 degrees C.

k. Gas fired boilers with a capacity of greater than or equal to 90 kW shall have a combustion efficiency of at least 80 percent when fired at the maximum and minimum ratings allowed by the controls.

2.2 FUEL BURNING EQUIPMENT

2.2.1 Burners

2.2.1.1 Gas Controls

Burners shall be UL approved mechanical draft burners with all air necessary for combustion supplied by a blower where the operation is coordinated with the burner. Burner shall be provided complete with fuel supply system in conformance with the following safety codes or standards:

a. Gas-fired units with inputs greater than 1.17 MW per combustion chamber shall conform to UL 795. Gas fired units less than 3.66 MW input shall conform to ANSI Z21.13. Single burner gas-fired units greater than or equal to 3.66 MW input shall conform to NFPA 8501.

2.2.2 Draft Fans

Fans conforming to AMCA 801 forced-draft shall be furnished as an integral part of boiler design. Fans shall be centrifugal with backward-curved blades, radial-tip blades or axial flow type. Each fan shall be sized for output volume and static pressure rating sufficient for pressure losses, excess air requirements at the burner, leakages, temperature, and elevation corrections for worst ambient conditions, all at full combustion to meet net-rated output at normal firing conditions, plus an overall excess air volume of 10 percent against a 20 percent static overpressure. Noise levels for fans shall not exceed 85 decibels in any octave band at a .914 meters (3 foot) station. Forced draft fan bearings shall be air cooled.

2.2.2.1 Draft Fan Control

Forced-draft centrifugal fans shall have inlet vane controls or shall have variable speed control where indicated. Inlet vanes shall be suitable for use with combustion control equipment. Axial propeller fans shall have variable propeller pitch control.

2.2.2.2 Draft Fan Drives

Fans shall be driven by electric motors. Electric motor shall be drip proof. Motor starter shall be magnetic across-the-line type with general purpose enclosure and shall be furnished with four auxiliary interlock contacts.

2.2.3 Draft Damper

Boilers shall be provided with manual or automatic dampers, draft hoods, or barometric dampers as recommended by the boiler manufacturer to maintain proper draft in the boiler. Draft damper shall be provided in a convenient and accessible location in the flue gas outlet from the boiler. Automatic damper shall be arranged for automatic operation by means of a damper

regulator, furnace draft regulator or damper motor.

2.2.4 Ductwork

Air ducts connecting the forced-draft fan units with the plenum chamber shall be designed to convey air with a minimum of pressure loss due to friction. Ductwork shall be galvanized sheet metal conforming to ASTM A 653/A 653M. Ducts shall be straight and smooth on the inside with laps made in direction of air flow. Ducts shall have cross-break with enough center height to assure rigidity in the duct section, shall be angle iron braced, and shall be completely free of vibration. Access and inspection doors shall be provided as indicated and required, with a minimum of one in each section between dampers or items of equipment. Ducts shall be constructed with long radius elbows having a centerline radius 1-1/2 times the duct width, or where the space does not permit the use of long radius elbows, short radius or square elbows with factory-fabricated turning vanes may be used. Duct joints shall be substantially airtight and shall have adequate strength for the service, with 38 x 38 x 3 mm (1-1/2 x 1-1/2 x 1/8 inch) angles used where required for strength or rigidity. Duct wall thickness shall be 16 gauge (1.5 mm) for ducts 1500 mm or less and 12 gauge (2.66 mm) for ducts larger than 1500 mm in maximum dimension. Additional ductwork shall be in accordance with Section 15895 AIR SUPPLY, DISTRIBUTION, VENTILATION, AND EXHAUST SYSTEM.

2.3 COMBUSTION CONTROL EQUIPMENT

Combustion control equipment shall be provided as a system by a single manufacturer. Field installed automatic combustion control system shall be installed in accordance with the manufacturer's recommendations and under the direct supervision of a representative of the control manufacturer. The boiler water temperature shall be controlled by a water temperature controller. The equipment shall operate electrically. If recording instruments are provided, a 1 year supply of ink and 400 blank charts for each recorder shall be furnished.

2.3.1 Electrical controls

Electrical control devices shall be rated at 120 volts and shall be connected as specified in Section 16415 ELECTRICAL WORK, INTERIOR.

2.3.2 Water Temperature Controller

The controller shall be of sturdy construction and shall be protected against dust and dampness. The thermostatic element shall be inserted in a separable socket installed in the upper part of the boiler near the water outlet. Fixed position (on-off) and three position (high-low-off) controller shall operate on a 5.56 degree C (10 degree F) differential over an adjustable temperature range of approximately 60 to 104.4 degrees C (140 to 220 degrees F). Controller shall be furnished with necessary equipment to automatically adjust the setting to suit the outside weather conditions. The outside air reset controller shall be operated in such a manner that the operating temperatures required by the boiler manufacturer are not compromised.

2.3.3 Boiler Combustion Controls and Positioners

a. Gas boiler units shall be provided with fixed rate (on-off) or three position (high-low-off) combustion controls with gas pilot or spark ignition. Modulating controls shall be provided with a

means for manually controlling the firing rate.

b. Fixed rate on-off High-low-off controls for boilers with capacities up to 600 kW (2,000,000 Btuh) shall use a water temperature controller in a temperature well in direct contact with the water.

2.3.4 Combustion Safety Controls and Equipment

Combustion safety controls and equipment shall be UL listed, microprocessor-based distributed process controller. The system shall include mounting hardware, wiring and cables, and associated equipment. The controller shall be mounted completely wired, programmed, debugged, and tested to perform all of its functions. The controller shall process the signals for complete control and monitoring of the boiler. This shall include maintaining boiler status, starting and stopping all control functions, sequencing control functions and signaling alarm conditions. The program shall be documented and include cross references in description of coils and contacts. Microprocessor shall be able to perform self diagnostics and contain a message center to provide operator with status and failure mode information. Controllers for each boiler shall be mounted on a separate, free standing panel adjacent to the boiler or for packaged boilers on the boiler supporting structure. Control systems and safety devices for automatically fired boilers shall conform to ASME CSD-1. Electrical combustion and safety controls shall be rated at 120 volts, single phase, 60 Hz and shall be connected as specified in Section 16415 ELECTRICAL WORK, INTERIOR. A 100 mm diameter alarm bell shall be provided and shall be located where indicated or directed. The alarm bell shall ring when the boiler is shut down by any safety control or interlock. Indicating lights shall be provided on the control panel. A red light shall indicate flame failure, and a green light shall indicate that the main fuel valve is open. The following shutdown conditions shall require a manual reset before the boiler can automatically recycle:

a. Flame failure.

b. Failure to establish pilot flame.

c. Failure to establish main flame.

d. Low-water cutoff.

e. High temperature cutoff.

2.3.4.1 Low-water Cutoff

Low-water cutoff shall be provided to stop the burner and draft fan when the water level drops below a predetermined point. The cutoff shall consist of a float chamber with float, float switch, and drain valve. The float switch shall be mounted on the float chamber with a packless-type leakproof connection. The float mechanism and drain valve shall be constructed of a corrosion-resistant material. The low-water cutoff shall be UL Gas&Oil Dir listed and shall be furnished with approved fittings and installed according to ASME boiler code requirements. The following type of low-water cutoff shall be utilized.

a. Feedwater Regulator with Low-Water Cutoff: Regulator shall be an approved design sized for the application. A regulator shall be provided for each boiler. The feeder shall be so arranged that

water will be fed to the boiler automatically when the water level in the boiler drops below a preset point and will actuate the alarm bell when the water level reaches the low danger point. The boiler feeder shall be arranged so that the burner and forced-draft fan will stop whenever the water level drops below a preset danger point. The boiler feeder shall be constructed so that the feedwater valve and seat are isolated from the float chamber to prevent overheating of the feed water and precipitation of scale on either the valve or seat. Each float mechanism, valve, and seat shall be constructed of an approved, durable, corrosion-resistant steel alloy. Valve seats shall be removable and renewable. The regulator shall be equipped with a large, self-cleaning strainer. The drain valve on the regulator shall be the gate or other straight-through type.

2.3.4.2 Water Flow Interlock

Hot water boiler limit controls shall be provided to include protection for low boiler water flow and high boiler water temperature. The limit controls shall be interlocked with the combustion control system to effect boiler alarm and shutdown. The controls shall not allow boiler startup unless hot water flow is proven.

2.4 PUMPS

2.4.1 Hot Water and Boiler Circulating Pumps

Circulating pumps for hot water shall be electrically driven single-stage centrifugal type and have a capacity not less than indicated. Boiler circulating pumps shall be supported by the piping on which installed and shall be closed-coupled shaft or flexible-coupled shaft. The boiler circulating pumps shall be as indicated. Hot water circulating pumps shall be supported on a concrete foundation with a cast iron or structural steel base and shall have a closed-coupled shaft or flexible-coupled shaft. The hot water circulating pumps shall be as indicated. The pump shaft shall be constructed of corrosion-resistant alloy steel, sleeve bearings and glands of bronze designed to accommodate a mechanical seal, and the housing of close-grained cast iron. Pump seals shall be capable of withstanding 115 degrees C temperature without external cooling. The motor shall have sufficient power for the service required, shall be of a type approved by the manufacturer of the pump, shall be suitable for the available electric service, and shall conform to the requirements of paragraph ELECTRICAL EQUIPMENT. Each pump suction and discharge connection shall be provided with a pressure gauge as specified. The boiler circulating pump discharge header shall be provided with a flow switch. Flow switch unit shall be a self-contained swinging vane type to indicate fluid flow. Switch shall be a SPDT with 120-volt, 15-ampere rating.

2.5 CONVECTORS

2.5.1 Convectors

The convector shall be the type and size indicated. The supply and return connections shall be the same size. Nonferrous convectors shall be tested hydrostatically at the factory and proved tight under a pressure of not less than 160 kPa (psig). A certified report of these tests shall be furnished in accordance with paragraph SUBMITTALS. Convectors shall be constructed of cast iron or of nonferrous alloys, and shall be installed

where indicated. Capacity of convectors shall be as indicated. Overall space requirements for convectors shall not be greater than the space provided. Convectors shall be complete as indicated for fully recessed application. Convector cabinets shall be constructed of black sheet steel not less than 0.912 mm (20 gauge).

2.5.2 Convectors Control

The space temperature shall be maintained automatically by regulating water flow to the convectors by the self contained, automatic thermostatic radiator control valves.

2.6 UNIT HEATERS

Heaters shall be as specified below, and shall have a heating capacity not in excess of 125 percent of the capacity indicated.

2.6.1 Propeller Fan Heaters

Heaters shall be designed for suspension and arranged for horizontal discharge of air as indicated. Casings shall be not less than 0.912 mm (20 gauge) black steel and finished with lacquer or enamel. Suitable stationary deflectors shall be provided to assure proper air and heat penetration capacity at floor level based on established design temperature. Suspension from heating pipes will not be permitted. Horizontal discharge type unit heaters shall have discharge or face velocities not in excess of the following:

Unit Capacity, Liters per Second	Face Velocity, Meters per Second
Up to 472 (1000)	4.06 (800)
473 (1001)	4.57 (900)
1417 (3001)	5.08 (1,000)

2.6.2 Centrifugal Fan Heater

Heaters shall be arranged for recessed ceiling mounting as indicated. Heating elements and fans shall be housed in steel cabinets of sectionalized steel plates or reinforced with angle-iron frames. Cabinets shall be constructed of not lighter than 1.27 mm (18 gauge) black steel. Each unit heater shall be provided with a means of diffusing and distributing the air. Fans shall be mounted on a common shaft, with one fan to each air outlet. Fan shaft shall be equipped with self-aligning ball, roller, or sleeve bearings and accessible means of lubrication. Fan shaft may be either directly connected to the driving motor or indirectly connected by adjustable V-belt drive rated at 150 percent of motor capacity. All fans in any one unit heater shall be the same size. Filters shall be provided of the fiberglass dispasable type, 25 mm thick, conforming to CID-A-A-1419. Filters shall be accessible from below.

2.6.3 Heatiing Elements

Heating coils shall be as specified in Section 15895 AIR SUPPLY, DISTRIBUTION, VENTILATION, AND EXHAUST SYSTEM for types indicated. Coils shall be suitable for use with water up to 121 degrees C (250 degrees F).

2.6.4 Motors

Motors shall be provided with NEMA 250 general purpose enclosure. Motors and motor controls shall otherwise be as specified in Section 16415 ELECTRICAL WORK, INTERIOR.

2.6.5 Motor Switches

Motors shall be provided with manual selection switches with "Off," and "Automatic" positions and shall be equipped with thermal overload protection.

2.6.6 Controls

Controls shall be provided as specified in Section 15950 HEATING, VENTILATING, AND AIR CONDITIONING HVAC CONTROL SYSTEMS.

2.7 AIR HANDLING UNITS

Air handling units and associated equipment shall be in accordance with Section 15895 AIR SUPPLY, DISTRIBUTION, VENTILATION, AND EXHAUST SYSTEM.

2.8 FITTINGS AND ACCESSORIES

Boiler fittings and accessories shall be installed with each boiler in accordance with ASME BPV IV, unless otherwise specified.

2.8.1 Conventional Breeching and Stacks

2.8.1.1 Breeching

Each boiler shall be connected to the stack or flue by breeching constructed of black steel sheets not less than 1.2 mm (0.0478 inch) thick nor less than thickness of stack, whichever is larger. The clear distance between any portion of the breeching surface and any combustible material shall not be less than that specified in NFPA 211. Joints and seams shall be securely fastened and made airtight. Suitable hinged and gasketed cleanouts shall be provided, which will permit cleaning the entire smoke connection without dismantling. Flexible-type expansion joints shall be provided as required and shall not require packing.

2.8.1.2 Stacks

Prefabricated double wall stacks system shall extend above the roof to the height indicated. The stacks shall be as indicated in height. The inner stack shall be 304 stainless steel having a thickness of not less than 0.89 mm (0.035 inch). The outer stack shall be sheet steel having a thickness of not less than 0.635 mm (0.025 inch). A method of maintaining concentricity between the inner and outer stacks shall be incorporated. The joints between the stack sections shall be sealed to prevent flue gas leakage. A 7.92 mm diameter hole shall be provided in the stack not greater than 150 mm from the furnace flue outlet for sampling of the exit gases. A method shall be provided to seal the hole to prevent exhaust gases from entering the boiler room when samples are not being taken. Each stack shall be provided complete with rain hood.

2.8.2 Expansion Tank

The hot water pressurization system shall include a diaphragm-type expansion tank which will accommodate the expanded water of the system generated within the normal operating temperature range, limiting the pressure increase at all components in the system to the maximum allowable pressure at those components. The only air in the system shall be the permanent sealed-in air cushion contained in the diaphragm-type tank. The sizes shall be as indicated. The expansion tank shall be welded steel, constructed, tested, and stamped in accordance with ASME BPV VIII Div 1 for a working pressure of 850 kPa (125 psi) and precharged to the minimum operating pressure. The tank's air chamber shall be fitted with an air charging valve and pressure gauge. The tank shall be supported by steel legs or bases for vertical installation or steel saddles for horizontal installations. The tank shall have lifting rings and a drain connection. All components shall be suitable for a maximum operating temperature of 120 degrees C (250 degrees F).

2.8.3 Air Separator

External air separation tank shall be steel, constructed, tested and stamped in accordance with ASME BPV VIII Div 1 for a working pressure of 850 kPa (125 psi). The capacity of the air separation tank indicated is minimum.

2.8.4 Filters

Filters shall conform to CID A-A-1419.

2.8.5 Foundation (Setting) Materials

2.8.5.1 Firebrick

Firebrick shall be ASTM C 27 class as recommended by boiler manufacturer.

2.8.5.2 Tile

Tile shall be ASTM C 34, Grade LBX.

2.8.5.3 Insulating Brick

Insulating brick shall comply with ASTM C 155.

2.8.5.4 Refractory Mortar

Refractory mortar shall comply with ASTM F 1097.

2.8.5.5 Castable Refractories

Castable refractories shall be ASTM C 401. The minimum modulus of rupture for transverse strength shall be not less than 4136 kPa (600 psi) after being heat soaked for 5 hours or more at a temperature in excess of 1371.1 degrees C (2500 degrees F).

2.8.6 Steel Sheets

2.8.6.1 Galvanized Steel

Galvanized steel shall be ASTM A 653/A 653M.

2.8.6.2 Uncoated Steel

Uncoated steel shall be ASTM A 366/A 366M, composition, condition, and finish best suited to the intended use. Gauge numbers specified refer to manufacturer's standard gauge.

2.8.7 Gaskets

Gaskets shall be nonasbestos material in accordance with ASME B16.21, full face or self-centering type. The gaskets shall be of the spiral wound type with graphite filler material.

2.8.8 Steel Pipe and Fittings

2.8.8.1 Steel Pipe

Steel pipe shall be ASTM A 53, Type E or S, Grade A or B, black steel, standard weight.

2.8.8.2 Steel Pipe Fittings

Fittings shall have the manufacturer's trademark affixed in accordance with MSS SP-25 so as to permanently identify the manufacturer.

2.8.8.3 Steel Flanges

Flanged fittings including flanges, bolts, nuts, bolt patterns, etc. shall be in accordance with ASME B16.5 class 150 and shall have the manufacturers trademark affixed in accordance with MSS SP-25. Flange material shall conform to ASTM A 105/A 105M. Flanges for high temperature water systems shall be serrated or raised-face type. Blind flange material shall conform to ASTM A 516/A 516M cold service and ASTM A 515/A 515M for hot service. Bolts shall be high strength or intermediate strength with material conforming to ASTM A 193/A 193M.

2.8.8.4 Welded Fittings

Welded fittings shall conform to ASTM A 234/A 234M with WPA marking. Buttwelded fittings shall conform to ASME B16.9, and socket-welded fittings shall conform to ASME B16.11.

2.8.8.5 Cast-Iron Fittings

Fittings shall be ASME B16.4, Class 125, type required to match connecting piping.

2.8.8.6 Malleable-Iron Fittings

Fittings shall be ASME B16.3, type as required to match connecting piping.

2.8.8.7 Unions

Unions shall be ASME B16.39, Class 150.

2.8.8.8 Threads

Pipe threads shall conform to ASME B1.20.1.

2.8.8.9 Grooved Mechanical fittings

Joints and fittings shall be designed for not less than 862 kPa (125 psig) service and shall be the product of the same manufacturer. Fitting and coupling houses shall be malleable iron conforming to ASTM A 47, Grade 32510; ductile iron conforming to ASTM A 536, Grade 65-45-12; or steel conforming to ASTM A 106, Grade B or ASTM A 53. Gaskets shall be molded synthetic rubber with central cavity, pressure responsive configuration and shall conform to ASTM D 2000, Grade No. 2CA615A15B44F17Z for circulating medium up to 110 degrees C (230 degrees F) or Grade N0. M3BA610A15B44Z for circulating medium up to 93 degrees C (200 degrees F). Grooved joints shall conform to AWWA C606. Coupling nuts and bolts shall be steel and shall conform to ASTM A 183.

2.8.9 Copper Tubing and Fittings

2.8.9.1 Copper Tubing

Tubing shall be ASTM B 88, Type K or L. Adapters for copper tubing shall be brass or bronze for brazed fittings.

2.8.9.2 Solder-Joint Pressure Fittings

Wrought copper and bronze solder-joint pressure fittings shall conform to ASME B16.22 and ASTM B 75. Cast copper alloy solder-joint pressure fittings shall conform to ASME B16.18 and ASTM B 828.

2.8.9.3 Flared Fittings

Cast copper alloy fittings for flared copper tube shall conform to ASME B16.26 and ASTM B 62.

2.8.9.4 Adapters

Adapters may be used for connecting tubing to flanges and to threaded ends of valves and equipment. Extracted brazed tee joints produced with an acceptable tool and installed as recommended by the manufacturer may be used.

2.8.9.5 Threaded Fittings

Cast bronze threaded fittings shall conform to ASME B16.15.

2.8.9.6 Brazing Material

Brazing material shall conform to AWS A5.8.

2.8.9.7 Brazing Flux

Flux shall be in paste or liquid form appropriate for use with brazing material. Flux shall be as follows: lead-free; have a 100 percent flushable residue; contain slightly acidic reagents; contain potassium borides, and contain fluorides. Silver brazing materials shall be in accordance with AWS A5.8.

2.8.9.8 Solder Material

Solder metal shall conform to ASTM B 32 95-5 tin-antimony.

2.8.9.9 Solder Flux

Flux shall be liquid form, non-corrosive, and conform to ASTM B 813, Standard Test 1.

2.8.10 Dielectric Unions

Dielectric unions shall have metal connections on both ends. The ends shall be threaded, flanged, or brazed to match adjacent piping. Metal parts of the union shall be separated so that the electrical current is below 1 percent of the galvanic current which would exist upon metal-to-metal contact.

2.8.11 Flexible Pipe Connectors

Flexible pipe connectors shall be designed for 861.8 kPa (125 psi) or 1034.2 kPa (150 psi) service. Connectors shall be installed where indicated. The flexible section shall be constructed of rubber, tetrafluoroethylene resin, or corrosion-resisting steel, bronze, monel, or galvanized steel. Materials used and the configuration shall be suitable for the pressure, vacuum, and temperature medium. The flexible section shall be suitable for service intended and may have threaded, welded, soldered, flanged, or socket ends. Flanged assemblies shall be equipped with limit bolts to restrict maximum travel to the manufacturer's standard limits. Unless otherwise indicated, the length of the flexible connectors shall be as recommended by the manufacturer for the service intended. Internal sleeves or liners, compatible with circulating medium, shall be provided when recommended by the manufacturer. Covers to protect the bellows shall be provided where indicated.

2.8.12 Pipe Supports

Pipe supports shall conform to MSS SP-58 and MSS SP-69.

2.8.13 Pipe Expansion

2.8.13.1 Expansion Loops

Expansion loops and offsets shall provide adequate expansion of the main straight runs of the system within the stress limits specified in ASME B31.1. The loops and offsets shall be cold-sprung and installed where indicated. Pipe guides and anchors shall be provided as indicated.

2.8.14 Valves

Valves shall be Class 125 and shall be suitable for the application. Grooved ends per AWWA C606 may be used for water service only. Valves in nonboiler external piping shall meet the material, fabrication and operating requirements of ASME B31.1. The connection type of all valves shall match the same type of connection required for the piping on which installed. All valves in insulated lines shall have extended neck to accomodate insulation thickness.

2.8.14.1 Gate Valves

Gate valves 65 mm (2-1/2 inches) and smaller shall conform to MSS SP-80 bronze rising stem, threaded, solder, or flanged ends. Gate valves 80 mm (3 inches) and larger shall conform to MSS SP-70 cast iron bronze trim, outside screw and yoke, flanged, or threaded ends.

2.8.14.2 Globe Valves

Globe valves 65 mm (2-1/2 inches) and smaller shall conform to MSS SP-80, bronze, threaded, soldered, or flanged ends. Globe valves 80 mm (3 inches) and larger shall conform to MSS SP-85, cast iron, bronze trim, flanged, or threaded ends.

2.8.14.3 Check Valves

Check valves 65 mm (2-1/2 inches) and smaller shall conform to MSS SP-80, bronze, threaded, soldered, or flanged ends. Check valves 80 mm (3 inches) and larger shall conform to MSS SP-71, cast iron, bronze trim, flanged, or threaded ends.

2.8.14.4 Angle Valves

Angle valves 65 mm (2-1/2 inches) and smaller shall conform to MSS SP-80 bronze, threaded, soldered, or flanged ends. Angle valves 80 mm (3 inches) and larger shall conform to MSS SP-85, cast iron, bronze trim, flanged, or threaded ends.

2.8.14.5 Ball Valves

Ball valves 15 mm (1/2 inch) and larger shall conform to MSS SP-72 or MSS SP-110, ductile iron or bronze, threaded, soldered, or flanged ends.

2.8.14.6 Plug Valves

Plug valves 51 mm and larger shall conform to MSS SP-78. Plug valves smaller than 51 mm shall conform to ASME B16.34.

2.8.14.7 Grooved End Valves

Valves with grooved ends per AWWA C606 may be used if the valve manufacturer certifies that their performance meets the requirements of the standards indicated for each type of valve.

2.8.14.8 Balancing Valves

Balancing valves shall have meter connections with positive shutoff valves. An integral pointer shall register the degree of valve opening. Valves shall be calibrated so that flow rate can be determined when valve opening in degrees and pressure differential across valve is known. Each balancing valve shall be constructed with internal seals to prevent leakage and shall be supplied with preformed insulation. Valves shall be suitable for 120 degrees C (250 degrees F) temperature and working pressure of the pipe in which installed. Valve bodies shall be provided with tapped openings and pipe extensions with shutoff valves outside of pipe insulation. The pipe extensions shall be provided with quick connecting hose fittings for a portable meter to measure the pressure differential. One portable differential meter shall be furnished. The meter suitable for the operating pressure specified shall be complete with hoses, vent, and shutoff valves, and carrying case. In lieu of the balancing valve with integral metering connections, a ball valve or plug valve with a separately installed orifice plate or venturi tube may be used for balancing.

2.8.14.9 Automatic Flow Control Valves

In lieu of the specified balancing valves, automatic flow control valves may be provided to maintain constant flow and shall be designed to be

sensitive to pressure differential across the valve to provide the required opening. Valves shall be selected for the flow required and provided with a permanent nameplate or tag carrying a permanent record of the factory-determined flow rate and flow control pressure levels. Valves shall control the flow within 5 percent of the tag rating. Valves shall be suitable for the maximum operating pressure of 850 kPa (125 psi) or 150 percent of the system operating pressure, whichever is greater. Where the available system pressure is not adequate to provide the minimum pressure differential that still allows flow control, the system pump head capability shall be increased. Valves shall be suitable for 120 degrees C (250 degrees F) temperature service. Valve materials shall be same as specified for the heating system check, globe, angle, and gate valves. Valve operator shall be the electric motor type or pneumatic type as applicable. Valve operator shall be capable of positive shutoff against the system pump head. Valve bodies shall be provided with tapped openings and pipe extensions with shutoff valves outside of pipe insulation. The pipe extensions shall be provided with quick connecting hose fittings for a portable meter to measure the pressure differential across the automatic flow control valve. A portable meter shall be provided with accessory kit as recommended for the project by the automatic valve manufacturer.

2.8.14.10 Butterfly Valves

Butterfly valves shall be 2-flange type or lug wafer type, and shall be bubbletight at 1135 kPa (150 psig). Valve bodies shall be cast iron, malleable iron, or steel. ASTM A 167, Type 404 or Type 316, corrosion resisting steel stems, bronze, or corrosion resisting steel discs, and synthetic rubber seats shall be provided. Valves smaller than 200 mm (8 inches) shall have throttling handles with a minimum of seven locking positions. Valves 200 mm (8 inches) and larger shall have totally enclosed manual gear operators with adjustable balance return stops and position indicators. Valves in insulated lines shall have extended neck to accommodate insulation thickness.

2.8.14.11 Drain valves

Drain valves shall be provided at each drain point of blowdown as recommended by the boiler manufacturer. Piping shall conform to ASME BPV IV and ASTM A 53.

2.8.14.12 Safety Valves

Safety valves shall have steel bodies and shall be equipped with corrosion-resistant trim and valve seats. The valves shall be properly guided and shall be positive closing so that no leakage can occur. Adjustment of the desired back-pressure shall cover the range between 15 and 70 kPa (2 and 10 psig). The adjustment shall be made externally, and any shafts extending through the valve body shall be provided with adjustable stuffing boxes having renewable packing. Boiler safety valves of proper size and of the required number, in accordance with ASME BPV IV, shall be installed so that the discharge will be through piping extended to a location as indicated. Each discharge pipe for hot water service shall be pitched away from the valve seat.

2.8.15 Strainers

Basket and "Y" type strainers shall be the same size as the pipelines in which they are installed. The strainer bodies shall be heavy and durable, fabricated of cast iron, and shall have bottoms drilled and tapped with a

gate valve attached for blowdown purposes. Strainers shall be designed for 850 kPa (125 psig) service and 110 degrees C (230 degrees F). The bodies shall have arrows clearly cast on the sides indicating the direction of flow. Each strainer shall be equipped with an easily removable cover and sediment screen. The screen shall be made of 0.795 mm thick corrosion-resistant steel with small perforations numbering not less than 620,000 per square m to provide a net free area through the basket of at least 3.30 times that of the entering pipe. The flow shall be into the screen and out through the perforations.

2.8.16 Pressure Gauges

Gauges shall conform to ASME B40.1 and shall be provided with throttling type needle valve or a pulsation dampener and shutoff valve. Minimum dial size shall be 90 mm (3-1/2 inches). A pressure gauge shall be provided for each boiler in a visible location on the boiler.

2.8.17 Thermometers

Thermometers shall be provided with wells and separable corrosion-resistant steel sockets. Thermometers for inlet water and outlet water for each hot water boiler shall be provided in a visible location on the boiler. Thermometers shall have brass, malleable iron, or aluminum alloy case and frame, clear protective face, permanently stabilized glass tube with indicating-fluid column, white face, black numbers, and a minimum 225 mm (9 inch) scale.

2.8.18 Air Vents

2.8.18.1 Manual Air Vents

Manual air vents shall be brass or bronze valves or cocks suitable for the pressure rating of the piping system and furnished with threaded plugs or caps.

2.8.18.2 Automatic Air Vents

Automatic air vents shall be 20 mm (3/4 inch) quick-venting float and vacuum air valves. Each air vent valve shall have a large port permitting the expulsion of the air without developing excessive back pressure, a noncollapsible metal float which will close the valve and prevent the loss of water from the system, an air seal that will effectively close and prevent the re-entry of air into the system when subatmospheric pressures prevail therein, and a thermostatic member that will close the port against the passage of steam from the system. The name of the manufacturer shall be clearly stamped on the outside of each valve. The air vent valve shall be suitable for the pressure rating of the piping system.

2.9 ELECTRICAL EQUIPMENT

Electric motor-driven equipment shall be provided complete with motors, motor starters, and necessary control devices. Electrical equipment, motor control devices, motor efficiencies and wiring shall be as specified in Section 16415 ELECTRICAL WORK, INTERIOR. Motors which are not an integral part of a packaged boiler shall be rated for high efficiency service. Motors which are an integral part of the packaged boiler shall be the highest efficiency available by the manufacturer of the packaged boiler. Motor starters shall be provided complete with properly sized thermal overload protections and other appurtenances necessary for the motor

control specified. Starters shall be furnished in general purpose enclosures. Manual or automatic control and protective or signal devices required for the operation specified and any control wiring required for controls and devices but not shown shall be provided.

2.9.1 Motor Ratings

Motors shall be suitable for the voltage and frequency provided. Motors 375 W (1/2 hp) and larger shall be three-phase, unless otherwise indicated. Motors shall be of sufficient capacity to drive the equipment at the specified capacity without exceeding the nameplate rating on the motor.

2.9.2 Motor Controls

Motor controllers shall be provided complete with properly sized thermal overload protection. Manual or automatic control and protective or signal devices required for the operation specified and any wiring required to such devices shall be provided. Where two-speed or variable-speed motors are indicated, solid-state variable-speed controllers may be provided to accomplish the same function. Solid state variable speed controllers shall be utilized for fractional through 7.46 kW (10 hp) ratings. Adjustable frequency drives shall be used for larger motors.

2.10 INSULATION

Shop and field-applied insulation shall be as specified in Section 15080 THERMAL INSULATION FOR MECHANICAL SYSTEMS.

2.11 TOOLS

Special tools shall be furnished. Special tools shall include uncommon tools necessary for the operation and maintenance of boilers, burners, pumps, fans, controls, meters, special piping systems, and other equipment. Small hand tools shall be furnished within a suitable cabinet, mounted where directed.

2.11.1 Breeching Cleaner

A cleaner shall be provided to clean the breeching. The cleaner shall have a jointed handle of sufficient length to clean the breeching without dismantling.

2.11.2 Wrenches

Wrenches shall be provided as required for specialty fittings such as manholes, handholes, and cleanouts. One set of extra gaskets shall be provided for all manholes and handholes, for pump barrels, and other similar items of equipment. Gaskets shall be packaged and properly identified.

2.12 BOILER WATER TREATMENT

The water treatment system shall be capable of feeding chemicals and bleeding the system to prevent corrosion and scale within the boiler and piping distribution system. The water shall be treated to maintain the conditions recommended by the boiler manufacturer. Chemicals shall meet required federal, state, and local environmental regulations for the treatment of boilers and discharge to the sanitary sewer. The services of

a company regularly engaged in the treatment of boilers shall be used to determine the correct chemicals and concentrations required for water treatment. The company shall maintain the chemical treatment and provide all chemicals required for a period of 1 year from the date of occupancy. Filming amines and proprietary chemicals shall not be used. The water treatment chemicals shall remain stable throughout the operating temperature range of the system and shall be compatible with pump seals and other elements of the system.

2.12.1 MakeUp Water Analysis

The makeup water conditions reported per ASTM D 596 are as follows:

Date of Sample	Jan/Feb 94
Temperature	7.8/6.7 degrees C
Iron (Average)	.04/.03 ppm (mg/1)
Calcium (Ca) as $CaCO_3$	59/59 ppm (mg/1)
pH (average)	7.6/7.6
Total Alkalinity as $CaCO_3$ (average)	36/40 ppm (mg/1)
Dissolved Solids (average)	228/149 ppm (mg/1)
Fluorine (average)	.96/1.04 ppm (mg/1)
Conductivity (average)	228/223microhm, cm

2.12.2 Boiler Water Limits

The boiler manufacturer shall be consulted for the determination of the boiler water chemical composition limits. The boiler water limits shall be as follows unless dictated differently by the boiler manufacturer's recommendations:

Sodium Sulfite	20-40 ppm
Hardness	Less than 2 ppm
pH	9.3 - 9.9

2.12.3 Chemical Shot Feeder

A shot feeder shall be provided as indicated. Size and capacity of feeder shall be based upon local requirements and water analysis. The feeder shall be furnished with an air vent, gauge glass, funnel, valves, fittings, and piping.

2.12.4 Chemical Piping

The piping and fittings shall be constructed of schedule 80 PVC.

2.12.5 Test Kits

One test kit of each type required to determine the water quality as outlined within the operation and maintenance manuals shall be provided.

PART 3 EXECUTION

3.1 ERECTION OF BOILER AND AUXILIARY EQUIPMENT

Boiler and auxiliary equipment shall be installed in accordance with manufacturer's written instructions. Proper provision shall be made for expansion and contraction between boiler foundation and floor. This joint shall be packed with suitable nonasbestos rope and filled with suitable compound that will not become soft at a temperature of 40 degrees C.

Boilers and firing equipment shall be supported from the foundations by structural steel completely independent of all brickwork. Boiler supports shall permit free expansion and contraction of each portion of the boiler without placing undue stress on any part of the boiler or setting. Boiler breeching shall be as indicated with full provision for expansion and contraction between all interconnected components.

3.2 PIPING INSTALLATION

Unless otherwise specified, nonboiler external pipe and fittings shall conform to the requirements of ASME B31.1. Pipe installed shall be cut accurately to suit field conditions, shall be installed without springing or forcing, and shall properly clear windows, doors, and other openings. Cutting or other weakening of the building structure to facilitate piping installation will not be permitted. Pipes shall be free of burrs, oil, grease and other foreign material and shall be installed to permit free expansion and contraction without damaging the building structure, pipe, pipe joints, or pipe supports. Changes in direction shall be made with fittings, except that bending of pipe 100 mm (4 inches) and smaller will be permitted provided a pipe bender is used and wide sweep bends are formed. The centerline radius of bends shall not be less than 6 diameters of the pipe. Bent pipe showing kinks, wrinkles, flattening, or other malformations will not be accepted. Vent pipes shall be carried through the roof as directed and shall be properly flashed. Unless otherwise indicated, horizontal supply mains shall pitch down in the direction of flow with a grade of not less than 0.2 percent. Open ends of pipelines and equipment shall be properly capped or plugged during installation to keep dirt or other foreign materials out of the systems. Pipe not otherwise specified shall be uncoated. Unless otherwise specified or shown, final connections to equipment shall be made with malleable-iron unions for steel pipe 65 mm (2-1/2 inches) or less in diameter and with flanges for pipe 80 mm (3 inches) or more in diameter. Unions for copper pipe or tubing shall be brass or bronze. Reducing fittings shall be used for changes in pipe sizes. In horizontal hot water lines, reducing fittings shall be eccentric type to maintain the top of the lines at the same level to prevent air binding.

3.2.1 Cold Water Connections

Cold water fill connections shall be made to the water supply system as indicated. Necessary pipe, fittings, and valves required for water connections between the boiler and cold water main shall be provided as shown. The pressure regulating valve shall be of a type that will not stick or allow pressure to build up on the low side. The valve shall be set to maintain a terminal pressure of approximately 35 kPa in excess of the static head on the system and shall operate within a 15 kPa tolerance regardless of cold water supply piping pressure and without objectionable noise under any condition of operation.

3.2.2 Hot Water Piping and Fittings

Pipe shall be black steel or copper tubing. Fittings for steel piping shall be black malleable iron or cast iron to suit piping. Fittings adjacent to valves shall suit valve material. Grooved mechanical fittings will not be allowed for water temperatures above 110 degrees C (230 degrees F).

3.2.3 Vent Piping and Fittings

Vent piping shall be black steel. Fittings shall be black malleable iron or cast iron to suit piping.

3.2.4 Gauge Piping

Piping shall be copper tubing.

3.2.5 Joints

Joints between sections of steel pipe and between steel pipe and fittings shall be threaded, grooved, flanged or welded as indicated or specified. Except as otherwise specified, fittings 25 mm (1 inch) and smaller shall be threaded; fittings 32 mm (1-1/4 inches) and up to but not including 80 mm (3 inches) shall be either threaded, grooved, or welded; and fittings 80 mm (3 inches) and larger shall be either flanged, grooved, or welded. Pipe and fittings 32 mm (1-1/4 inches) and larger installed in inaccessible conduit or trenches beneath concrete floor slabs shall be welded. Connections to equipment shall be made with black malleable-iron unions for pipe 65 mm (2-1/2 inches) or smaller in diameter and with flanges for pipe 80 mm (3 inches) inches or larger in diameter. Joints between sections of copper tubing or pipe shall be flared, soldered, or brazed.

3.2.5.1 Threaded Joints

Threaded joints shall be made with tapered threads properly cut and shall be made perfectly tight with a stiff mixture of graphite and oil or with polytetrafluoroethylene tape applied to the male threads only and in no case to the fittings.

3.2.5.2 Welded Joints

Welded joints shall be in accordance with paragraph GENERAL REQUIREMENTS unless otherwise specified. Changes in direction of piping shall be made with welding fittings only; mitering or notching pipe to form elbows and tees or other similar type construction will not be permitted. Branch connections may be made with either welding tees or forged branch outlet fittings, either being acceptable without size limitation. Branch outlet fittings, where used, shall be forged, flared for improved flow characteristics where attached to the run, reinforced against external strains, and designed to withstand full pipe bursting strength. Socket weld joints shall be assembled so that the space between the end of the pipe and the bottom of the socket is no less than 1.5 mm and no more than 3 mm.

3.2.5.3 Grooved Mechanical Joints

Grooved mechanical joints may be provided for hot water systems in lieu of unions, welded, flanged, or screwed piping connections in low temperature hot water systems where the temperature of the circulating medium does not exceed 110 degrees C. Grooves shall be prepared according to the coupling manufacturer's instructions. Pipe and groove dimensions shall comply with the tolerances specified by the coupling manufacturer. The diameter of grooves made in the field shall be measured using a "go/no-go" gauge, vernier or dial caliper, or narrow-land micrometer. Groove width and dimension of groove from end of pipe shall be measured and recorded for each change in grooving tool setup to verify compliance with coupling manufacturer's tolerances. Grooved joints shall not be used in concealed locations. Mechanical joints shall use rigid mechanical pipe couplings,

except at equipment connections. At equipment connections, flexible couplings may be used. Coupling shall be of the bolted type for use with grooved end pipes, fittings, valves, and strainers. Couplings shall be self-centering and shall engage in a watertight couple.

3.2.5.4 Flared and Brazed Copper Pipe and Tubing

Tubing shall be cut square, and burrs shall be removed. Both inside of fittings and outside of tubing shall be cleaned thoroughly with sand cloth or steel wire brush before brazing. Annealing of fittings and hard-drawn tubing shall not occur when making connections. Installation shall be made in accordance with the manufacturer's recommendations. Mitering of joints for elbows and notching of straight runs of pipe for tees will not be permitted. Brazed joints shall be made in conformance with AWS B2.2, MSS SP-73, and CDA-02 with flux. Copper-to-copper joints shall include the use of copper-phosphorous or copper-phosphorous-silver brazing metal without flux. Brazing of dissimilar metals (copper to bronze or brass) shall include the use of flux with either a copper-phosphorous, copper-phosphorous-silver or a silver brazing filler metal. Joints for flared fittings shall be of the compression pattern. Swing joints or offsets shall be provided in all branch connections, mains, and risers to provide for expansion and contraction forces without undue stress to the fittings or to short lengths of pipe or tubing. Flared or brazed copper tubing to pipe adapters shall be provided where necessary for joining threaded pipe to copper tubing.

3.2.5.5 Soldered Joints

Soldered joints shall be made with flux and are only acceptable for lines 50 mm (2 inches) and smaller. Soldered joints shall conform to ASME B31.5 and CDA-02.

3.2.5.6 Copper Tube Extracted Joint

An extruded mechanical tee joint may be made in copper tube. Joint shall be produced with an appropriate tool by drilling a pilot hole and drawing out the tube surface to form a collar having a minimum height of three times the thickness of the tube wall. To prevent the branch tube from being inserted beyond the depth of the extracted joint, dimpled depth stops shall be provided. The branch tube shall be notched for proper penetration into fitting to assure a free flow joint. Extracted joints shall be brazed using a copper phosphorous classification brazing filler metal. Soldered joints will not be permitted.

3.2.6 Flanges and Unions

Flanges shall be faced true, provided with 1.6 mm (1/16 inch) thick gaskets, and made square and tight. Where steel flanges mate with cast-iron flanged fittings, valves, or equipment, they shall be provided with flat faces and full face gaskets. Union or flange joints shall be provided in each line immediately preceding the connection to each piece of equipment or material requiring maintenance such as coils, pumps, control valves, and other similar items. Dielectric pipe unions shall be provided between ferrous and nonferrous piping to prevent galvanic corrosion. The dielectric unions shall have metal connections on both ends. The ends shall be threaded, flanged, or brazed to match adjacent piping. The metal parts of the union shall be separated so that the electrical current is below 1 percent of the galvanic current which would exist upon metal-to-metal contact. Gaskets, flanges, and unions shall be installed in

accordance with manufacturer's recommendations.

3.2.7 Branch Connections

3.2.7.1 Branch Connections for Hot Water Systems

Branches from the main shall pitch up or down as shown to prevent air entrapment. Connections shall ensure unrestricted circulation, eliminate air pockets, and permit complete drainage of the system. Branches shall pitch with a grade of not less than 8 mm in 1 m. When indicated, special flow fittings shall be installed on the mains to bypass portions of the water through each radiator. Special flow fittings shall be standard catalog products and shall be installed as recommended by the manufacturer.

3.2.8 Flared, Brazed, and Soldered Copper Pipe and Tubing

Copper tubing shall be flared, brazed, or soldered. Tubing shall be cut square, and burrs shall be removed. Both inside of fittings and outside of tubing shall be cleaned thoroughly with sand cloth or steel wire brush before brazing. Annealing of fittings and hard-drawn tubing shall not occur when making connections. Installation shall be made in accordance with the manufacturer's recommendations. Mitering of joints for elbows and notching of straight runs of pipe for tees will not be permitted. Joints for flared fittings shall be of the compression pattern. Swing joints or offsets shall be provided on branch connections, mains, and risers to provide for expansion and contraction forces without undue stress to the fittings or to short lengths of pipe or tubing. Pipe adapters shall be provided where necessary for joining threaded pipe to copper tubing. Brazed joints shall be made in conformance with MSS SP-73, and CDA-02. Copper-to-copper joints shall include the use of copper-phosphorous or copper-phosphorous-silver brazing metal without flux. Brazing of dissimilar metals (copper to bronze or brass) shall include the use of flux with either a copper-phosphorous, copper-phosphorous-silver, or a silver brazing filler metal. Soldered joints shall be made with flux and are only acceptable for lines 50 mm (2 inches) or smaller. Soldered joints shall conform to ASME B31.5 and shall be in accordance with CDA-02.

3.2.9 Copper Tube Extracted Joint

An extracted mechanical tee joint may be made in copper tube. Joint shall be produced with an appropriate tool by drilling a pilot hole and drawing out the tube surface to form a collar having a minimum height of three times the thickness of the tube wall. To prevent the branch tube from being inserted beyond the depth of the extracted joint, dimpled depth stops shall be provided. The branch tube shall be notched for proper penetration into fitting to assure a free flow joint. Extracted joints shall be brazed using a copper phosphorous classification brazing filler metal. Soldered joints will not be permitted.

3.2.10 Supports

3.2.10.1 General

Hangers used to support piping 50 mm (2 inches) and larger shall be fabricated to permit adequate adjustment after erection while still supporting the load. Pipe guides and anchors shall be installed to keep pipes in accurate alignment, to direct the expansion movement, and to prevent buckling, swaying, and undue strain. Piping subjected to vertical movement when operating temperatures exceed ambient temperatures shall be

supported by variable spring hangers and supports or by constant support hangers.

3.2.10.2 Seismic Requirements for Supports and Structural Bracing

Equipment shall be supported and braced to resist seismic loads as specified in Section 13080 SEISMIC PROTECTION FOR MECHANICAL, ELECTRICAL EQUIPMENT. Structural steel required for reinforcement to properly support equipment, but not shown, shall be provided in this section. Material used for supports shall be as specified in Section 05120 STRUCTURAL STEEL.

3.2.10.3 Pipe Hangers, Inserts, and Supports

Pipe hangers, inserts, and supports shall conform to MSS SP-58 and MSS SP-69, except as modified herein.

a. Types 5, 12, and 26 shall not be used.

b. Type 3 shall not be used on insulated pipe which has a vapor barrier. Type 3 may be used on insulated pipe that does not have a vapor barrier if clamped directly to the pipe, if the clamp bottom does not extend through the insulation, and if the top clamp attachment does not contact the insulation during pipe movement.

c. Type 18 inserts shall be secured to concrete forms before concrete is placed. Continuous inserts which allow more adjustment may be used if they otherwise meet the requirements for Type 18 inserts.

d. Type 19 and 23 C-clamps shall be torqued per MSS SP-69 and have both locknuts and retaining devices furnished by the manufacturer. Field fabricated C-clamp bodies or retaining devices are not acceptable.

e. Type 20 attachments used on angles and channels shall be furnished with an added malleable-iron heel plate or adapter.

f. Type 24 may be used only on trapeze hanger systems or on fabricated frames.

g. Horizontal pipe supports shall be spaced as specified in MSS SP-69 and a support shall be installed not over 300 mm from the pipe fitting joint at each change in direction of the piping. Pipe supports shall be spaced not over 1500 mm apart at valves.

h. Vertical pipe shall be supported at each floor, except at slab-on-grade, and at intervals of not more than 4500 mm, not more than 2400 mm from end of risers, and at vent terminations.

i. Type 35 guides using steel, reinforced polytetrafluoroethylene (PTFE) or graphite slides shall be provided where required to allow longitudinal pipe movement. Lateral restraints shall be provided as required. Slide materials shall be suitable for the system operating temperatures, atmospheric conditions, and bearing loads encountered.

(1) Where steel slides do not require provisions for restraint of lateral movement, an alternate guide method may be used. On piping 100 mm (4 inches) and larger, a Type 39 saddle may be

welded to the pipe and freely rested on a steel plate. On piping under 100 mm (4 inches), a Type 40 protection shield may be attached to the pipe or insulation and freely rested on a steel slide plate.

(2) Where there are high system temperatures and welding to piping is not desirable, the Type 35 guide shall include a pipe cradle welded to the guide structure and strapped securely to the pipe. The pipe shall be separated from the slide material by at least 100 mm or by an amount adequate for the insulation, whichever is greater.

j. Except for Type 3, pipe hangers on horizontal insulated pipe shall be the size of the outside diameter of the insulation.

k. Piping in trenches shall be supported as indicated.

l. Structural steel attachments and brackets required to support piping, headers, and equipment, but not shown, shall be provided under this section. Material and installation shall be as specified under Section 05120 STRUCTURAL STEEL. Pipe hanger loads suspended from steel joist between panel points shall not exceed 22 kg. Loads exceeding 22 kg shall be suspended from panel points.

3.2.10.4 Multiple Pipe Runs

In the support of multiple pipe runs on a common base member, a clip or clamp shall be used where each pipe crosses the base support member. Spacing of the base support member shall not exceed the hanger and support spacing required for any individual pipe in the multiple pipe run. The clips or clamps shall be rigidly attached to the common base member. A clearance of 3 mm shall be provided between the pipe insulation and the clip or clamp for piping which may be subjected to thermal expansion.

3.2.11 Anchors

Anchors shall be provided where necessary to localize expansion or to prevent undue strain on piping. Anchors shall consist of heavy steel collars with lugs and bolts for clamping and attaching anchor braces, unless otherwise indicated. Anchor braces shall be installed in the most effective manner to secure the desired results, using turnbuckles where required. Supports, anchors, or stays shall not be attached where they will injure the structure or adjacent construction during installation or by the weight of expansion of the pipeline.

3.2.12 Valves

Valves shall be installed where indicated, specified, and required for functioning and servicing of the systems. Valves shall be safely accessible. Swing check valves shall be installed upright in horizontal lines and in vertical lines only when flow is in the upward direction. Gate and globe valves shall be installed with stems horizontal or above. Valves to be brazed shall be disassembled prior to brazing and all packing removed. After brazing, the valves shall be allowed to cool before reassembling.

3.2.13 Pipe Sleeves

Pipe passing through concrete or masonry walls or concrete floors or roofs shall be provided with pipe sleeves fitted into place at the time of construction. A waterproofing clamping flange shall be installed as indicated where membranes are involved. Sleeves shall not be installed in structural members except where indicated or approved. Rectangular and square openings shall be as detailed. Each sleeve shall extend through its respective wall, floor, or roof. Sleeves through walls shall be cut flush with wall surface. Sleeves through floors shall be cut flush with floor surface. Sleeves through roofs shall extend above the top surface of roof at least 150 mm for proper flashing or finishing. Unless otherwise indicated, sleeves shall be sized to provide a minimum clearance of 6 mm between bare pipe and sleeves or between jacket over insulation and sleeves. Sleeves in waterproofing membrane floors, bearing walls, and wet areas shall be galvanized steel pipe or cast-iron pipe. Sleeves in nonbearing walls, floors, or ceilings may be galvanized steel pipe, cast-iron pipe, or galvanized sheet metal with lock-type longitudinal seam. Except in pipe chases or interior walls, the annular space between pipe and sleeve or between jacket over insulation and sleeve in nonfire rated walls shall be sealed as indicated and specified in Section 07900 JOINT SEALING. Metal jackets shall be provided over insulation passing through exterior walls, firewalls, fire partitions, floors, or roofs.

Metal jackets shall not be thinner than 0.1524 mm (0.006 inch) thick aluminum, if corrugated, and 0.4 mm (0.016 inch) thick aluminum, if smooth.

Metal jackets shall be secured with aluminum or stainless steel bands not less than 9 mm wide and not more than 200 mm apart. When penetrating roofs and before fitting the metal jacket into place, a 15 mm wide strip of sealant shall be run vertically along the inside of the longitudinal joint of the metal jacket from a point below the backup material to a minimum height of 1000 mm above the roof. If the pipe turns from vertical to horizontal, the sealant strip shall be run to a point just beyond the first elbow. When penetrating waterproofing membrane for floors, the metal jacket shall extend from a point below the back-up material to a minimum distance of 50 mm above the flashing. For other areas, the metal jacket shall extend from a point below the backup material to a point 300 mm above material to a minimum distance of 50 mm above the flashing. For other areas, the metal jacket shall extend from a point below the backup material to a point 300 mm above the floor; when passing through walls above grade, the jacket shall extend at least 100 mm beyond each side of the wall.

3.2.13.1 Pipes Passing Through Waterproofing Membranes

In addition to the pipe sleeves referred to above, pipes passing through waterproofing membranes shall be provided with a 1.6 mm (4 pound) lead flashing or a 0.55 mm (16 ounce) copper flashing, each within an integral skirt or flange. Flashing shall be suitably formed, and the skirt or flange shall extend not less than 200 mm from the pipe and shall set over the membrane in a troweled coating of bituminous cement. The flashing shall extend above the roof or floor a minimum of 250 mm. The annular space between the flashing and the bare pipe or between the flashing and the metal-jacket-covered insulation shall be sealed as indicated. Pipes up to and including 250 mm (10 inches) in diameter which pass through waterproofing membrane may be installed through a cast-iron sleeve with caulking recess, anchor lugs, flashing clamp device, and pressure ring with brass bolts. Waterproofing membrane shall be clamped into place and sealant shall be placed in the caulking recess.

3.2.13.2 Optional Modular Mechanical Sealing Assembly

At the option of the Contractor, a modular mechanical type sealing assembly may be installed in the annular space between the sleeve and conduit or pipe in lieu of a waterproofing clamping flange and caulking and sealing specified above. The seals shall include interlocking synthetic rubber links shaped to continuously fill the annular space between the pipe/conduit and sleeve with corrosion-protected carbon steel bolts, nuts, and pressure plates. The links shall be loosely assembled with bolts to form a continuous rubber belt around the pipe with a pressure plate under each bolt head and each nut. After the seal assembly is properly positioned in the sleeve, tightening of the bolt shall cause the rubber sealing elements to expand and provide a watertight seal between the pipe/conduit and the sleeve. Each seal assembly shall be sized as recommended by the manufacturer to fit the pipe/conduit and sleeve involved.

3.2.13.3 Optional Counterflashing

As alternates to caulking and sealing the annular space between the pipe and flashing or metal-jacket-covered insulation and flashing, counterflashing may consist of standard roof coupling for threaded pipe up to 150 mm (6 inches) in diameter, lead flashing sleeve for dry vents with the sleeve turned down into the pipe to form a waterproof joint, or a tack-welded or banded-metal rain shield around the pipe, sealed as indicated.

3.2.13.4 Fire Seal

Where pipes pass through firewalls, fire partitions, or floors, a fire seal shall be provided as specified in Section 07270 FIRESTOPPING.

3.2.14 Balancing Valves

Balancing valves shall be installed as indicated.

3.2.15 Thermometer Wells

A thermometer well shall be provided in each return line for each circuit in multicircuit systems.

3.2.16 Air Vents

Air vents shall be installed where shown or directed. Air vents shall be installed in piping at all system high points. The vent shall remain open until water rises in the tank or pipe to a predetermined level at which time it shall close tight. An overflow pipe from the vent shall be run to a point designated by the Contracting Officer's representative. The inlet to the air vent shall have a gate valve or ball valve.

3.2.17 Escutcheons

Escutcheons shall be provided at all finished surfaces where exposed piping, bare or insulated, passes through floors, walls, or ceilings except in boiler, utility, or equipment rooms. Escutcheons shall be fastened securely to pipe or pipe covering and shall be chromium-plated iron or chromium-plated brass, either one-piece or split pattern, held in place by internal spring tension or setscrews.

3.2.18 Drains

A drain connection with a 25 mm (1 inch) gate valve or 20 mm (3/4 inch hose bib shall be installed at the lowest point in the return main near the boiler. In addition, threaded drain connections with threaded cap or plug shall be installed on the heat exchanger coil on each unit heater or unit ventilator and wherever required for thorough draining of the system.

3.2.19 Strainer Blow-Down Piping

Strainer blow-down connections shall be fitted with a black steel blow-down pipeline routed to an accessible location and provided with a blow-down valve.

3.3 GAS FUEL SYSTEM

Gas piping, fittings, valves, regulators, tests, cleaning, and adjustments shall be in accordance with the Section 15488 GAS PIPING SYSTEMS. NFPA 54 shall be complied with unless otherwise specified. Burners, pilots, and all accessories shall be listed in UL Gas&Oil Dir. The fuel system shall be provided with a gas tight, manually operated, UL listed stop valve at the gas-supply connections, a gas strainer, a pressure regulator, pressure gauges, a burner-control valve, a safety shutoff valve suitable for size of burner and sequence of operation, and other components required for safe, efficient, and reliable operation as specified. Approved permanent and ready facilities to permit periodic valve leakage tests on the safety shutoff valve or valves shall be provided.

3.4 FIELD PAINTING

Ferrous metal not specified to be coated at the factory shall be cleaned, prepared, and painted as specified in Section 09900 PAINTING, GENERAL. Exposed pipe covering shall be painted as specified in Section 09900 PAINTING, GENERAL. Aluminum sheath over insulation shall not be painted.

3.5 HEATING SYSTEM TESTS

Before any covering is installed on pipe or heating equipment, the entire heating system's piping, fittings, and terminal heating units shall be hydrostatically tested and proved tight at a pressure of 1-1/2 times the design working pressure. Before pressurizing system for test, items or equipment (e.g., vessels, pumps, instruments, controls, relief valves) rated for pressures below the test pressure shall be blanked off or replaced with spool pieces. Before balancing and final operating test, test blanks and spool pieces shall be removed; and protected instruments and equipment shall be reconnected. With equipment items protected, the system shall be pressurized to test pressure. Pressure shall be held for a period of time sufficient to inspect all welds, joints, and connections for leaks, but not less than 2 hours. No loss of pressure will be allowed. Leaks shall be repaired and repaired joints shall be retested. Caulking of joints shall not be permitted. System shall be drained and after instruments and equipment are reconnected, the system shall be refilled with service medium and maximum operating pressure applied. The pressure shall be held while inspecting these joints and connections for leaks. The leaks shall be repaired and the repaired joints retested. Upon completion of hydrostatic tests and before acceptance of the installation, the Contractor shall balance the heating system in accordance with Section 15990 TESTING, ADJUSTING AND BALANCING OF HVAC SYSTEMS; and operating tests required to demonstrate satisfactory functional and operational efficiency shall be performed. The operating test shall cover a period of at least 24

hours for each system, and shall include, as a minimum, the following specific information in a report, together with conclusions as to the adequacy of the system:

a. Certification of balancing.

b. Time, date, and duration of test.

c. Outside and inside dry bulb temperatures.

d. Temperature of hot water supply leaving boiler.

e. Temperature of heating return water from system at.

f. Quantity of water feed to boiler.

g. Boiler make, type, serial number, design pressure, and rated capacity.

h. Fuel burner make, model, and rated capacity; ammeter and voltmeter readings for burner motor.

i. Circulating pump make, model, and rated capacity, and ammeter and voltmeter readings for pump motor during operation.

j. Flue-gas temperature at boiler outlet.

k. Percent carbon dioxide in flue-gas.

l. Grade or type and calorific value of fuel.

m. Draft at boiler flue-gas exit.

n. Draft or pressure in furnace.

o. Quantity of water circulated.

p. Quantity of fuel consumed.

q. Stack emission pollutants concentration.

Indicating instruments shall be read at half-hour intervals unless otherwise directed. The Contractor shall furnish all instruments, equipment, and personnel required for the tests and balancing. Fuels, water, and electricity shall be obtained as specified in the SPECIAL CONTRACT REQUIREMENTS. Operating tests shall demonstrate that fuel burners and combustion and safety controls meet the requirements of ASME CSD-1, ANSI Z21.13 and NFPA 8501

3.5.1 Water Treatment Testing

3.5.1.1 Water Quality Test

The boiler water shall be analyzed prior to the acceptance of the facility by the water treatment company. The analysis shall include the following information recorded in accordance with ASTM D 596.

Date of Sample	[_____]
Temperature	[_____] degrees C

Silica (SiO2)	[_____]	ppm (mg/1)
Insoluble	[_____]	ppm (mg/1)
Iron and Aluminum Oxides	[_____]	ppm (mg/1)
Calcium (Ca)	[_____]	ppm (mg/1)
Magnesium (Mg)	[_____]	ppm (mg/1)
Sodium and Potassium (Na and K)	[_____]	ppm (mg/1)
Carbonate (HCO3)	[_____]	ppm (mg/1)
Sulfate (SO4)	[_____]	ppm (mg/1)
Chloride (C1)	[_____]	ppm (mg/1)
Nitrate (NO3)	[_____]	ppm (mg/1)
Turbidity	[_____]	unit
pH	[_____]	
Residual Chlorine	[_____]	ppm (mg/1)
Total Alkalinity	[_____]	epm (meq/1)
Noncarbonate Hardness	[_____]	epm (meq/1)
Total Hardness	[_____]	epm (meq/1)
Dissolved Solids	[_____]	ppm (mg/1)
Fluorine	[_____]	ppm (mg/1)
Conductivity	[_____]	microhm/cm

If the boiler water is not in conformance with the boiler manufacturer's recommendations, the water treatment company shall take corrective action.

3.5.1.2 Boiler

At the conclusion of the 1 year period, the boiler shall be inspected for problems due to corrosion and scale. If the boiler is found not to conform to the manufacturer's recommendations, and the water treatment company recommendations have been followed, the water treatment company shall provide all chemicals and labor for cleaning or repairing the equipment as required by the manufacturer's recommendations.

3.6 CLEANING

3.6.1 Boilers and Piping

After the hydrostatic tests have been made and before the system is balanced and operating tests are performed, the boilers and feed water piping shall be thoroughly cleaned by filling the system with a solution consisting of either 0.5 kg of caustic soda or 0.5 kg of trisodium phosphate per 100 L of water. The proper safety precautions shall be observed in the handling and use of these chemicals. The water shall be heated to approximately 65 degrees C and the solution circulated in the system for a period of 48 hours. The system shall then be drained and thoroughly flushed out with fresh water. Strainers and valves shall be thoroughly cleaned. Prior to operating tests, air shall be removed from all water systems by operating the air vents.

3.6.2 Heating Units

Inside space heating equipment, ducts, plenums, and casing shall be thoroughly cleaned of debris and blown free of small particles of rubbish and dust and then vacuum cleaned before installing outlet faces. Equipment shall be wiped clean, with all traces of oil, dust, dirt, or paint spots removed. Temporary filters shall be provided for fans that are operated during construction, and new filters shall be installed after construction dirt has been removed from the building, and the ducts, plenum, casings, and other items specified have been vacuum cleaned. System shall be maintained in this clean condition until final acceptance. Bearings shall

be properly lubricated with oil or grease as recommended by the manufacturer. Belts shall be tightened to proper tension. Control valves and other miscellaneous equipment requiring adjustment shall be adjusted to setting indicated or directed. Fans shall be adjusted to the speed indicated by the manufacturer to meet specified conditions.

3.7 FUEL SYSTEM TESTS

3.7.1 Gas System Test

The gas fuel system shall be tested in accordance with the test procedures outlined in NFPA 54.

3.8 FIELD TRAINING

The Contractor shall conduct a training course for the operating staff as designated by the Contracting Officer. The training period shall consist of a total of 4 hours of normal working time and shall start after the system is functionally completed but prior to final acceptance tests. The field instructions shall cover all of the items contained in the operating and maintenance instructions, as well as demonstrations of routine maintenance operations and boiler safety devices. The Contracting Officer shall be notified at least 14 days prior to date of proposed conduction of the training course.

-- End of Section --

SECTION 15650

CENTRAL REFRIGERATED AIR-CONDITIONING SYSTEM

PART 1 GENERAL

1.1 REFERENCES

The publications listed below form a part of this specification to the extent referenced. The publications are referred to in the text by basic designation only.

AIR CONDITIONING AND REFRIGERATION INSTITUTE (ARI)

ARI 495	(1993) Refrigerant Liquid Receivers
ARI ANSI/ARI 550	(1992) Centrifugal or Rotary Screw Water-Chilling Packages
ARI ANSI/ARI 590	(1992) Positive Displacement Compressor Water-Chilling Packages
ARI 700	(1995) Specifications for Fluorocarbon and Other Refrigerants
ARI ANSI/ARI 710	(1986) Liquid-Line Driers
ARI ANSI/ARI 720	(1988) Refrigerant Access Valves and Hose Connectors
ARI 750	(1994) Thermostatic Refrigerant Expansion Valves
ARI 760	(1994) Solenoid Valves for Use with Volatile Refrigerants

AMERICAN BEARING MANUFACTURERS ASSOCIATION (ABEMA)

ABEMA Std 9	(1990) Load Ratings and Fatigue Life for Ball Bearings
ABEMA Std 11	(1990) Load Ratings and Fatigue Life for Roller Bearings

AMERICAN SOCIETY FOR TESTING AND MATERIALS (ASTM)

ASTM A 47	(1990; R 1995) Ferritic Malleable Iron Castings
ASTM A 53	(1996) Pipe, Steel, Black and Hot-Dipped, Zinc-Coated, Welded and Seamless
ASTM A 106	(1995) Seamless Carbon Steel Pipe for High-Temperature Service
ASTM A 181/A181M	(1995b) Carbon Steel Forgings for

	General-Purpose Piping
ASTM A 183	(1983; R 1990) Carbon Steel Track Bolts and Nuts
ASTM A 193/A193M	(1996) Alloy-Steel and Stainless Steel Bolting Materials for High-Temperature Service
ASTM A 234/A234M	(1996b) Piping Fittings of Wrought Carbon Steel and Alloy Steel for Moderate and Elevated Temperatures
ASTM A 307	(1994) Carbon Steel Bolts and Studs, 60 000 PSI Tensile Strength
ASTM A 334/A334M	(1996) Seamless and Welded Carbon and Alloy-Steel Tubes for Low-Temperature Service
ASTM A 536	(1984; R 1993) Ductile Iron Castings
ASTM A 733	(1993) Welded and Seamless Carbon Steel and Austenitic Stainless Steel Pipe Nipples
ASTM B 32	(1996) Solder Metal
ASTM B 62	(1993) Composition Bronze or Ounce Metal Castings
ASTM B 75	(1995a) Seamless Copper Tube
ASTM B 88	(1996) Seamless Copper Water Tube
ASTM B 117	(1995) Operating Salt Spray (Fog) Apparatus
ASTM B 280	(1995a) Seamless Copper Tube for Air Conditioning and Refrigeration Field Service
ASTM C 534	(1994) Preformed Flexible Elastomeric Cellular Thermal Insulation in Sheet and Tubular Form
ASTM D 520	(1984; R 1995) Zinc Dust Pigment
ASTM D 2000	(1996) Rubber Products in Automotive Applications
ASTM D 3308	(1991a) PTFE Resin Skived Tape
ASTM F 104	(1993) Nonmetallic Gasket Materials
ASTM F 1199	(1988, R 1993) Cast (All Temperature and Pressures) and Welded Pipe Line Strainers (150 psig and 150 degrees F Maximum)

AMERICAN SOCIETY OF HEATING, REFRIGERATING AND AIR-CONDITIONING ENGINEERS (ASHRAE)

ASHRAE 15	(1994) Safety Code for Mechanical Refrigeration
ASHRAE 34	(1992; Addenda a-j) Number Designation and Safety Classification of Refrigerants

AMERICAN SOCIETY OF MECHANICAL ENGINEERS (ASME)

ASME B1.20.1	(1983; R 1992) Pipe Threads, General Purpose (Inch)
ASME B16.5	(1996) Pipe Flanges and Flanged Fittings NPS 1/2 thru NPS 24
ASME B16.9	(1993) Factory-Made Wrought Steel Buttwelding Fittings
ASME B16.11	(1991) Forged Fittings, Socket-Welding and Threaded
ASME B16.18	(1984; R 1994) Cast Copper Alloy Solder Joint Pressure Fittings
ASME B16.21	(1992) Nonmetallic Flat Gaskets for Pipe Flanges
ASME B16.22	(1995) Wrought Copper and Copper Alloy Solder Joint Pressure Fittings
ASME B16.26	(1988) Cast Copper Alloy Fittings for Flared Copper Tubes
ASME B16.39	(1986; R 1994) Malleable Iron Threaded Pipe Unions Classes 150, 250, and 300
ASME B31.1	(1995; B31.1a; B31.1b) Power Piping
ASME B31.5	(1992; B31.5a) Refrigeration Piping
ASME B40.1	(1991) Gauges - Pressure Indicating Dial Type - Elastic Element
ASME BPV VIII Div 1	(1995; Addenda Dec 1995, Dec 1996) Boiler and Pressure Vessel Code; Section VIII, Pressure Vessels Division 1 - Basic Coverage
ASME BPV IX	(1995; Addenda Dec 1995, Dec 1996) Boiler and Pressure Vessel Code; Section IX, Welding and Brazing Qualifications

AMERICAN WATER WORKS ASSOCIATION (AWWA)

AWWA C606	(1987) Grooved and Shouldered Joints

AMERICAN WELDING SOCIETY (AWS)

AWS A5.8	(1992) Filler Metals for Brazing and Braze

Welding

AWS D1.1	(1996) Structural Welding Code - Steel

HYDRAULIC INSTITUTE (HI)

HI ANSI/HI 1.1-1.5	(1994) Centrifugal Pumps

MANUFACTURERS STANDARDIZATION SOCIETY OF THE VALVE AND FITTINGS INDUSTRY (MSS)

MSS SP-25	(1993) Standard Marking System for Valves, Fittings, Flanges and Unions
MSS SP-58	(1993) Pipe Hangers and Supports - Materials, Design and Manufacture
MSS SP-67	(1995) Butterfly Valves
MSS SP-69	(1996) Pipe Hangers and Supports - Selection and Application
MSS SP-70	(1990) Cast Iron Gate Valves, Flanged and Threaded Ends
MSS SP-71	(1990) Cast Iron Swing Check Valves, Flanges and Threaded Ends
MSS SP-72	(1992) Ball Valves with Flanged or Butt-Welding Ends for General Service
MSS SP-78	(1987; R 1992) Cast Iron Plug Valves, Flanged and Threaded Ends
MSS SP-80	(1997) Bronze Gate, Globe, Angle and Check Valves
MSS SP-85	(1994) Cast Iron Globe & Angle Valves, Flanged and Threaded Ends
MSS SP-110	(1996) Ball Valves Threaded, Socket Welding, Solder Joint, Grooved and Flared Ends

NATIONAL ELECTRICAL MANUFACTURERS ASSOCIATION (NEMA)

NEMA 250	(1991) Enclosures for Electrical Equipment (1000 Volts Maximum)
NEMA ICS 1	(1993) Industrial Controls and Systems
NEMA ICS 2	(1993) Industrial Control and Systems Controllers, Contractors, and Overload Relays Rated Not More Than 2,000 Volts AC or 750 DC
NEMA MG 1	(1993; Rev 1; Rev 2; Rev 3) Motors and Generators

NATIONAL FIRE PROTECTION ASSOCIATION (NFPA)

NFPA 90A	(1996; Errata) Installation of Air Conditioning and Ventilating Systems

1.2 SYSTEM DESCRIPTION

This specification section covers the provisions and installation procedures necessary for a complete and totally functional central refrigerated air-conditioning system as defined herein.

1.3 SUBMITTALS

Government approval is required for submittals with a "GA" designation; submittals having an "FIO" designation are for information only. The following shall be submitted in accordance with Section 01330 SUBMITTAL PROCEDURES:

SD-01 Data

Central Refrigerated Air-Conditioning System; GA|ED.

Manufacturer's catalog data, at least 5 weeks prior to beginning construction, shall be highlighted to show model No., size, options, performance charts and curves, etc. in adequate detail to demonstrate compliance with contract requirements. Data shall include manufacturer's recommended installation instructions and procedures. Data shall be adequate to demonstrate compliance with contract requirements as specified within the paragraphs:

a. Refrigeration System
b. System Components
c. Accessories
d. Piping Components

If vibration isolation is specified for a unit, vibration isolator literature shall be included containing catalog cuts and certification that the isolation characteristics of the isolators provided meet the manufacturer's recommendations.

Water Treatment Systems; GA|ED.

Six complete copies, at least 5 weeks prior to the purchase of the water treatment system, of the proposed water treatment plan including a layout, control scheme, a list of existing make-up water conditions including the items listed in Paragraph Water Analysis, a list of chemicals, the proportion of chemicals to be added, the final treated water conditions, and a description of environmental concerns for handling the chemicals.

Spare Parts; FIO;AR.

Spare parts data for each different item of material and equipment specified, after approval of the detail drawings and not later than 2 months prior to the date of beneficial occupancy. The data shall include a complete list of parts and supplies, with source of supply.

Qualifications; FIO;AR.

Six copies of qualified procedures, and list of names and identification

symbols of qualified welders and welding operators, prior to non-factory welding operations.

SD-04 Drawings

Central Refrigerated Air-Conditioning System ; GA|ED.

Drawings, at least 5 weeks prior to beginning construction, shall provide adequate detail to demonstrate compliance with contract requirements. Drawings shall consist of:

a. Equipment layouts which identify assembly and installation details.

b. Piping layouts which identify all valves and fittings.

c. Plans and elevations which identify clearances required for maintenance and operation.

d. Wiring diagrams which identify each component individually and all interconnected or interlocked relationships between components.

e. Foundation drawings, bolt-setting information, and foundation bolts prior to concrete foundation construction for all equipment indicated or required to have concrete foundations.

f. Details, if piping and equipment are to be supported other than as indicated, which include loadings and type of frames, brackets, stanchions, or other supports.

SD-06 Instructions

Posted Instructions; FIO;AR.

Posted instructions, at least 2 weeks prior to construction completion, shall include equipment layout, wiring and control diagrams, piping, valves and control sequences, and typed condensed operation instructions. The condensed operation instructions shall include preventative maintenance procedures, methods of checking the system for normal and safe operation, and procedures for safely starting and stopping the system. The posted instructions shall be framed under glass or laminated plastic and be posted where indicated by the Contracting Officer.

SD-07 Schedules

Factory Tests; FIO;AR.

Schedules, at least 2 weeks prior to the factory test, which identify the date, time, and location for each test. Schedules shall be submitted for both the Chiller Performance Test and the Chiller Sound Test.

Tests; FIO;AR.

Test schedules, at least 2 weeks prior to the start of related testing, for each of the field tests, the system performance tests, and the condenser water quality tests. The schedules shall identify the date, time, and location for each test.

Demonstrations; FIO;AR.

A schedule, at least 2 weeks prior to the date of the proposed training course, which identifies the date, time, and location for the training.

SD-08 Statements

Verification of Dimensions; FIO;AR.

A letter, at least 2 weeks prior to beginning construction, including the date the site was visited, conformation of existing conditions, and any discrepancies found.

SD-09 Reports

Factory Tests; FIO;AR.

Six copies of the report shall be provided in bound 216 x 279 mm (8 1/2 x 11 inch) booklets. Reports shall certify the compliance with performance requirements and follow the format of the required testing standard for both the Chiller Performance Tests and the Chiller Sound Tests. Test report shall include certified calibration report of all test instrumentation. Calibration report shall include certification that all test instrumentation has been calibrated within 6 months prior to the test date, identification of all instrumentation, and certification that all instrumentation complies with requirements of the test standard. Test report shall be submitted 1 week after completion of the factory test.

Field Tests; FIO;AR.

Six copies of the report shall be provided in bound 216 x 279 mm (8 1/2 x 11 inch) booklets. Reports shall document all phases of tests performed during the Water Pipe Testing, the Refrigerant Pipe Testing, and the Cooling Tower Tests. The report shall include initial test summaries, all repairs/adjustments made, and the final test results.

System Performance Tests; GA|ED.

Six copies of the report shall be provided in bound 216 x 279 (8 1/2 x 11 inch) booklets. The report shall document compliance with the specified performance criteria upon completion and testing of the system. The report shall indicate the number of days covered by the tests and any conclusions as to the adequacy of the system. The report shall also include the following information and shall be taken at least three different times at outside dry-bulb temperatures that are at least 3 degrees C (5 degrees F) apart:

a. Date and outside weather conditions.
b. The load on the system based on the following:

(1) The refrigerant used in the system.

(2) Condensing temperature and pressure.

(3) Suction temperature and pressure.

(4) Running current, voltage and proper phase sequence for each phase of all motors.

(5) The actual on-site setting of all operating and safety controls.

(6) Chilled water pressure, flow and temperature in and out of the chiller.

(7) The position of the capacity-reduction gear at machine off, one-third loaded, one-half loaded, two-thirds loaded, and fully loaded.

SD-13 Certificates

Central Refrigerated Air-Conditioning System; FIO;AR.

Where the system, components, or equipment are specified to comply with requirements of AGA, NFPA, ARI, ASHRAE, ASME, or UL, 1 copy of proof of such compliance shall be provided. The label or listing of the specified agency shall be acceptable evidence. In lieu of the label or listing, a written certificate from an approved, nationally recognized testing organization equipped to perform such services, stating that the items have been tested and conform to the requirements and testing methods of the specified agency may be submitted. When performance requirements of this project's drawings and specifications vary from standard ARI rating conditions, computer printouts, catalog, or other application data certified by ARI or a nationally recognized laboratory as described above shall be included. If ARI does not have a current certification program that encompasses such application data, the manufacturer may self certify that his application data complies with project performance requirements in accordance with the specified test standards.

SD-19 Operation and Maintenance Manuals

Operation Manual; FIO;AR.

Six complete copies of an operation manual in bound 216 x 279 (81/2 x 11 inch) booklets listing step-by-step procedures required for system startup, operation, abnormal shutdown, emergency shutdown, and normal shutdown at least 4 weeks prior to the first training course. The booklets shall include the manufacturer's name, model number, and parts list. The manuals shall include the manufacturer's name, model number, service manual, and a brief description of all equipment and their basic operating features.

Maintenance Manual; FIO;AR.

Six complete copies of maintenance manual in bound 216 x 279 (81/2 x 11 inch) booklets listing routine maintenance procedures, possible breakdowns and repairs, and a trouble shooting guide. The manuals shall include piping and equipment layouts and simplified wiring and control diagrams of the system as installed.

Water Treatment System; FIO;AR.

Six complete copies of operating and maintenance manuals for the step-by-step water treatment procedures. The manuals shall include testing procedures used in determining water quality.

1.4 QUALIFICATIONS

Piping shall be welded in accordance with the qualified procedures using performance qualified welders and welding operators. Procedures and

welders shall be qualified in accordance with ASME BPV IX. Welding procedures qualified by others, and welders and welding operators qualified by another employer may be accepted as permitted by ASME B31.1. The Contracting Officer shall be notified 24 hours in advance of tests and the tests shall be performed at the work site if practical. The welder or welding operator shall apply his assigned symbol near each weld he makes as a permanent record. Structural members shall be welded in accordance with Section 05055 WELDING, STRUCTURAL.

1.5 SAFETY REQUIREMENTS

Exposed moving parts, parts that produce high operating temperature, parts which may be electrically energized, and parts that may be a hazard to operating personnel shall be insulated, fully enclosed, guarded, or fitted with other types of safety devices. Safety devices shall be installed so that proper operation of equipment is not impaired.

1.6 DELIVERY, STORAGE, AND HANDLING

All equipment delivered and placed in storage shall be stored with protection from the weather, humidity and temperature variations, dirt and dust, or other contaminants.

1.7 PROJECT/SITE CONDITIONS

1.7.1 Verification of Dimensions

The Contractor shall become familiar with all details of the work, verify all dimensions in the field, and shall advise the Contracting Officer of any discrepancy before performing any work.

1.7.2 Drawings

Because of the small scale of the drawings, it is not possible to indicate all offsets, fittings, and accessories that may be required. The Contractor shall carefully investigate the plumbing, fire protection, electrical, structural and finish conditions that would affect the work to be performed and shall arrange such work accordingly, furnishing required offsets, fittings, and accessories to meet such conditions.

PART 2 PRODUCTS

2.1 STANDARD COMMERCIAL PRODUCTS

Materials and equipment shall be standard products of a manufacturer regularly engaged in the manufacturing of such products, which are of a similar material, design and workmanship. The standard products shall have been in satisfactory commercial or industrial use for two years prior to bid opening. The two-year use shall include applications of equipment and materials under similar circumstances and of similar size. The two years experience shall be satisfactorily completed by a product which has been sold or is offered for sale on the commercial market through advertisements, manufacturer's catalogs, or brochures. Products having less than a two-year field service record shall be acceptable if a certified record of satisfactory field operation, for not less than 6000 hours exclusive of the manufacturer's factory tests, can be shown. All products shall be supported by a service organization. The Contractor shall submit a certified list of qualified permanent service organizations for support of the equipment which includes their addresses and

qualifications. These service organizations shall be reasonably convenient to the equipment installation and shall be able to render satisfactory service to the equipment on a regular and emergency basis during the warranty period of the contract.

2.2 NAMEPLATES

Each major component of equipment shall have the manufacturer's name, address, type or style, and catalog or serial number on a plate securely attached to the item of equipment. As a minimum, nameplates shall be provided for:

a. Liquid-Chilling Package(s)
b. Compressor(s)
c. Compressor Driver(s)
d. Condenser(s)
e. Liquid Cooler(s)
f. Receiver(s)
g. Pump(s)
h. Pump Motor(s)
i. Expansion Tanks
j. Air Separator Tanks

2.3 ELECTRICAL WORK

Electrical equipment, motors, motor starters, and wiring shall be in accordance with Section 16415 ELECTRICAL WORK, INTERIOR. Electrical motor driven equipment specified shall be provided complete with motors, motor starters, and controls. Electrical characteristics and enclosure type shall be as shown, and unless otherwise indicated, all motors of 745 W (1 horsepower) and above with open, dripproof, or totally enclosed fan cooled enclosures, shall be high efficiency type. Field wiring shall be in accordance with manufacturer's instructions. Each motor shall conform to NEMA MG 1 and be of sufficient size to drive the equipment at the specified capacity without exceeding the nameplate rating of the motor. Motors shall be continuous duty with the enclosure specified. Motor starters shall be provided complete with thermal overload protection and other appurtenances necessary for the motor control indicated. Motors shall be furnished with a magnetic across-the-line or reduced voltage type starter as required by the manufacturer. Motor starter shall be provided in enclosures constructed in accordance with UL and NEMA 3R enclosures. Manual or automatic control and protective or signal devices required for the operation specified and any control wiring required for controls and devices specified, but not shown, shall be provided.

2.4 SELF-CONTAINED LIQUID CHILLER

Unless necessary for delivery purposes, units shall be assembled, leak-tested, charged (refrigerant and oil), and adjusted at the factory. In lieu of delivery constraints, a chiller may be assembled, leak-tested, charged (refrigerant and oil), and adjusted at the job site by a factory representative. Unit components delivered separately shall be sealed and charged with a nitrogen holding charge. Unit assembly shall be completed in strict accordance with manufacturer's recommendations. Chiller shall operate within capacity range and speed recommended by the manufacturer. Parts weighing 23 kg or more which must be removed for inspection, cleaning, or repair, such as motors, gear boxes, cylinder heads, casing tops, condenser, and cooler heads, shall have lifting eyes or lugs. Chiller shall be provided with factory installed insulation on surfaces

subject to sweating including the liquid cooler, suction line piping, economizer, and cooling lines. Chiller shall include all customary auxiliaries deemed necessary by the manufacturer for safe, controlled, automatic operation of the equipment. Chiller shall be provided with a single point wiring connection for incoming power supply. Factory installed insulation shall be provided on all suction piping from the evaporator to the compressor and on the liquid cooler shell. Where motors are the gas-cooled type, factory installed insulation shall be provided on the cold-gas inlet connection to the motor per manufacturer's standard practice. Chiller's condenser and liquid cooler shall be provided with standard water boxes with grooved mechanical, flanged or welded connections.

2.4.1 Scroll or Rotary Screw Type

Chiller shall be constructed and rated in accordance with ARI ANSI/ARI 590. Chiller shall be conform to ASHRAE 15. Chiller shall have a minimum full load COP rating of 2.7 and a part load COP rating of 2.9 in accordance with ARI ANSI/ARI 590. As a minimum, chiller shall include the following components as defined in paragraph CHILLER COMPONENTS.

a. Refrigerant and oil
b. Structural base
c. Controls package
d. Scroll or rotary screw compressor
e. Compressor driver, electric motor
f. Compressor driver connection
g. Liquid cooler (evaporator)
f. Air-condenser coil
g. Receiver
h. Tools
i. Chiller refrigerant circuit

2.4.2 Centrifugal or Rotary Screw Type

Centrifugal chiller shall be constructed and rated in accordance with ARI ANSI/ARI 550. Rotary screw chiller shall be constructed and rated in accordance with ARI ANSI/ARI 550 or ARI ANSI/ARI 590 as applicable. Chiller shall have a minimum full load COP rating of 2.7 and a part load COP rating of 2.9 in accordance with ARI ANSI/ARI 550 or ARI ANSI/ARI 590 as applicable. Chiller shall conform to ASHRAE 15. As a minimum, chiller shall include the following components as defined in paragraph CHILLER COMPONENTS.

a. Refrigerant and oil
b. Structural base
c. Controls package
d. Centrifugal or rotary screw compressor
e. Compressor driver, electric motor
f. Compressor driver connection
g. Liquid cooler (evaporator)
h. Air-cooled condenser coil
i. Receiver
j. Purge system for chillers which operate below atmospheric pressure
k. Tools

2.5 CHILLER COMPONENTS

2.5.1 Refrigerant and Oil

Refrigerants shall be one of the fluorocarbon gases. Refrigerants shall have number designations and safety classifications in accordance with ASHRAE 34. Refrigerants shall meet the requirements of ARI 700 as a minimum. Refrigerants shall have an Ozone Depletion Potential (ODP) of less than or equal to 0.05.

2.5.2 Structural Base

Chiller and individual chiller components shall be provided with a factory-mounted welded structural steel base or support legs. Chiller and individual chiller components shall be isolated by means of vibration isolators with published load ratings. Vibration isolators shall have isolation characteristics as recommended by the manufacturer for the unit supplied and the service intended.

2.5.3 Chiller Refrigerant Circuit

Chiller refrigerant circuit shall be completely piped and factory leak tested. For multicompressor units, not less than 2 independent refrigerant circuits shall be provided. Circuit shall include as a minimum a combination filter and drier, combination sight glass and moisture indicator, liquid-line solenoid valve for reciprocating or scroll units, an electronic or thermostatic expansion valve with external equalizer, charging ports, compressor service valves, and superheat adjustment.

2.5.4 Controls Package

Chiller shall be provided with a complete factory mounted and prewired electric or microprocessor based control system. Controls package shall be unit-mounted which contains as a minimum a digital display or acceptable gauges, an on-auto-off switch, motor starters, power wiring, control wiring, and disconnect switches. Controls package shall provide operating controls, monitoring capabilities, programmable setpoints, safety controls, and EMCS interfaces as defined below.

2.5.4.1 Operating Controls

Chiller shall be provided with the following adjustable operating controls as a minimum.

a. Leaving chilled water temperature control

b. Adjustable timer to prevent compressor from short cycling

c. Load limiting

d. Fan sequencing for air-cooled condenser

e. System capacity control to adjust the unit capacity in accordance with the system load and the programmable setpoints. Controls shall automatically re-cycle the chiller on power interruption.

f. Startup and head pressure controls to allow system operation at all ambient temperatures down to 4 degrees C

2.5.4.2 Monitoring Capabilities

During normal operations, the control system shall be capable of monitoring and displaying the following operating parameters. Access and operation of

display shall not require opening or removing any panels or doors.

a. Entering and leaving chilled water temperatures
b. Self diagnostic
c. Operation status
d. Operating hours
e. Number of starts
f. Compressor status (on or off)
g. Refrigerant discharge and suction pressures

2.5.4.3 Programmable Setpoints

The control system shall be capable of being reprogrammed directly at the unit. No parameters shall be capable of being changed without first entering a security access code. The programmable setpoints shall include the following as a minimum.

a. Leaving Chilled Water Temperature
b. Time Clock/Calender Date

2.5.4.4 Safety Controls with Manual Reset

Chiller shall be provided with the following safety controls which automatically shutdown the chiller and which require manual reset.

a. Low chilled water temperature protection
b. High condenser refrigerant discharge pressure protection
c. Low suction pressure protection
d. Chilled water flow detection
e. Motor current overload and phase loss protection
f. High motor winding temperature protection for hermetic motors
g. Low oil flow protection

2.5.4.5 Safety Controls with Automatic Reset

Chiller shall be provided with the following safety controls which automatically shutdown the chiller and which provide automatic reset.

a. Over/under voltage protection
b. Phase reversal protection
c. Chilled water flow interlock

2.5.4.6 Remote Alarm

During the initiation of a safety shutdown, the control system shall be capable of activating a remote alarm bell. In coordination with the chiller, the contractor shall provide an alarm circuit (including transformer if applicable) and a minimum 100 mm (4 inch) diameter alarm bell. Alarm circuit shall activate bell in the event of machine shutdown due to the chiller's monitoring of safety controls. The alarm bell shall not sound for a chiller that uses low-pressure cutout as an operating control.

2.5.4.7 Energy Management Control System (EMCS) Interface

The control system shall be capable of communicating all data to a remote integrated DDC processor through a single shielded cable. The data shall include as a minimum all system operating conditions, capacity controls, and safety shutdown conditions. The control system shall also be capable

of receiving at a minimum the following operating commands.

a. Remote Unit Start/Stop
b. Remote Chilled Water Reset
c. Remote Condenser Water Reset

2.5.5 Compressor(s)

2.5.5.1 Scroll Compressor(s)

Compressors shall be of the compliant, hermetically sealed design. Compressors shall be mounted on vibration isolators to minimize vibration and noise. Rotating parts shall be statically and dynamically balanced at the factory to minimize vibration. Lubrication system shall be centrifugal pump type equipped with a means for determining oil leveland an oil charging valve. Crankcase oil heater shall be provided if standard or if available as an option. If provided, the crankcase oil heater shall be controlled as recommended by the manufacturer.

2.5.5.2 Rotary Screw Compressor(s)

Compressors shall operate stably for indefinite time periods at any stage of capacity reduction without hot-gas bypass. Provision shall be made to insure proper lubrication of bearings and shaft seals on shutdown with or without electric power supply. Rotary screw compressors shall include:

a. An open or hermetic, positive displacement, oil-injected design directly driven by the compressor driver. Compressor shall allow access to internal compressor components for repairs, inspection, and replacement of parts.

b. Rotors which are solid steel forging with sufficient rigidity for proper operation.

c. A maximum rotor operating speed no greater than 3600 RPM.

d. Casings of cast iron, precision machined for minimal clearance about periphery of rotors.

e. A lubrication system of the forced-feed type that provides oil at the proper pressure to all parts requiring lubrication.

f. Shaft main bearings of the sleeve type with heavy duty bushings or rolling element type in accordance with ABEMA Std 9 or ABEMA Std 11. Bearings shall be conservatively loaded and rated for an L(10) life of not less than 200,000 hours.

g. A differential oil pressure or flow cutout to allow the compressor to operate only when the required oil pressure or flow is provided to the bearings.

h. A temperature- or pressure-initiated, hydraulically actuated, single-slide-valve, capacity-control system to provide minimum automatic capacity modulation from 100 percent to 25 percent.

i. An oil separator and oil return system to remove oil entrained in the refrigerant gas and automatically return the oil to the compressor.

j. Crankcase oil heaters controlled as recommended by the manufacturer.

2.5.5.3 Centrifugal Compressor(s)

Centrifugal compressors shall be single or multistage, having dynamically balanced impellers, either direct or gear driven by the compressor driver. Impellers shall be over-speed tested at 1.2 times the impeller-shaft speed. Impeller shaft shall be heat-treated alloy steel with sufficient rigidity for proper operation at any required operating speed. Centrifugal compressors shall include:

a. Shaft main bearings that are the rolling element type in accordance with ABEMA Std 9 or ABEMA Std 11, journal type with bronze or babbitt liners, or of the aluminum-alloy one-piece insert type. Bearings shall be rated for an L(10) life of not less than 200,000 hours.

b. Casing of cast iron, aluminum, or steel plate with split sections gasketed and bolted or clamped together.

c. Lubrication system of the forced-feed type that provides oil at the proper pressure to all parts requiring lubrication.

d. Provisions to ensure proper lubrication of bearings and shaft seals prior to starting and upon stopping with or without electric power supply. On units providing forced-feed lubrication prior to starting, a differential oil pressure cutout interlocked with the compressor starting equipment shall allow the compressor to operate only when the required oil pressure is provided to the bearings.

e. Oil sump heaters controlled as recommended by the manufacturer.

f. Temperature-or pressure-actuated prerotation vane or suction damper to provide automatic capacity modulation from 100 percent capacity to 10 percent capacity. If operation to 10 percent capacity cannot be achieved without providing hot-gas bypass, then the Contractor shall indicate in the equipment submittal the load percent at which hot gas bypass is required.

2.5.6 Compressor Driver, Electric Motor

Motor shall be the polyphase, induction type conforming to NEMA MG 1. Motors shall be suitable for use with the indicated electrical power characteristics and the type of starter provided. Motor starters shall be the reduced voltage, closed-transition type conforming to NEMA ICS 1 and NEMA ICS 2. Motor starter shall be unit mounted as indicated with starter type, wiring, and accessories coordinated by the chiller manufacturer. Starter shall be able to operate in temperatures up to 48.8 degrees C.

2.5.7 Compressor Driver Connections

Each compressor shall be driven by a V-belt drive or direct connected through a flexible coupling, except that flexible coupling is not required on hermetic units. V-belt drives shall be designed for not less than 150 percent of the driving motor capacity. Flexible couplings shall be of the type that does not require lubrication.

2.5.8 Liquid Cooler (Evaporator)

Cooler shall be of the shell-and-coil or shell-and-tube type design. Condenser's refrigerant side shall be designed and factory pressure tested to comply with ASHRAE 15. Condenser's water side shall be designed and factory pressure tested for not less than 1,000 kPa . Cooler shell shall be constructed of seamless or welded steel. Coil bundles shall be totally removable and arranged to drain completely. Tubes shall be seamless copper, plain, integrally finned with smooth bore or integrally finned with enhanced bore. Each tube shall be individually replaceable. Tubes shall be installed into carbon mild steel tube sheets by rolling. Tube baffles shall be properly spaced to provide adequate tube support and cross flow. Performance shall be based on a water velocity not less than 0.91 m/s (3 fps) nor more than 3.7 mm (12 fps) and a fouling factor of 0.00025.

2.5.9 Air-Cooled Condenser Coil

Condenser coil shall be of the extended-surface fin-and-tube type and shall be constructed of seamless copper or aluminum tubes with compatible copper or aluminum fins. Fins shall be soldered or mechanically bonded to the tubes and installed in a metal casing. Coils shall be circuited and sized for a minimum of 3 degrees C subcooling and full pumpdown capacity. Coil shall be factory leak and pressure tested after assembly in accordance with ASHRAE 15.

2.5.10 Receivers

Liquid receivers not already specified herein as an integral factory-mounted part of a package, shall be designed, fitted, and rated in accordance with the recommendations of ARI 495, except as modified herein. Receiver shall bear a stamp certifying compliance with ASME BPV VIII Div 1 and shall meet the requirements of ASHRAE 15. Inner surfaces shall be thoroughly cleaned by sandblasting or other approved means. Each receiver shall have a storage capacity not less than 20 percent in excess of that required for the fully-charged system. Each receiver shall be equipped with inlet, outlet drop pipe, drain plug, purging valve, relief valves of capacity and setting required by ASHRAE 15, and two bull's eye liquid-level sight glasses. Sight glasses shall be in the same vertical plane, 90 degrees apart, perpendicular to the axis of the receiver, and not over 75 mm horizontally from the drop pipe measured along the axis of the receiver. In lieu of bull's eye sight glass, external gauge glass with metal glass guard and automatic closing stop valves may be provided.

2.5.11 Chiller Purge System

Chillers which operate at pressures below atmospheric pressure shall be provided with a purge system that operates independently of the chiller. Purge system shall automatically remove air, water vapor, and non-condensible gases from the chiller's refrigerant. Purge system shall condense, separate, and return all refrigerant back to the chiller. An oil separator shall be provided with the purge system if required by the manufacturer. Purge system shall not discharge to occupied areas, or create a potential hazard to personnel. Purge system shall include a purge pressure gauge, number of starts counter, and an elapsed time meter. Purge system shall include lights or an alarm which indicate excessive purge or an abnormal air leakage into chiller.

2.5.12 Tools

One complete set of special tools as recommended by the manufacturer for field maintenance of the system shall be provided. Tools shall be mounted on a tool board in the equipment room or contained in a toolbox as directed by the Contracting Officer.

2.6 ACCESSORIES

2.6.1 Pumps

Pumps shall be the electrically driven, non-overloading, centrifugal type which conform to HI ANSI/HI 1.1-1.5. Pump capacity, efficiency, motor size, and impeller type shall be as indicated on the drawings. Pumps shall be selected at or near peak efficiency. Pump curve shall rise continuously from maximum capacity to shutoff. Pump motor shall be totally enclosed and have sufficient wattage (horsepower) for the service required. Each pump motor shall be equipped with an across-the-line magnetic controller in a NEMA 250, Type 1 enclosure with "START-STOP" switch in the cover.

2.6.1.1 Construction

Shaft seal shall be mechanical-seal or stuffing-box type. Impeller shall be statically and dynamically balanced. Each pump casing shall be designed to withstand the discharge head specified plus the static head on system plus 50 percent of the total, but not less than 862 kPa (125 psig). Pump casing and bearing housing shall be close grained cast iron. High points in the casing shall be provided with manual air vents; low points shall be provided with drain plugs. Impeller, impeller wearing rings, glands, casing wear rings, and shaft sleeve shall be bronze. Shaft shall be carbon or alloy steel, turned and ground. Bearings shall be ball-bearings, roller-bearings, or oil-lubricated bronze-sleeve type bearings, and be efficiently sealed or isolated to prevent loss of oil or entrance of dirt or water. Pump and motor shall be mounted on a common cast iron base having lipped edges and tapped drainage openings or structural steel base with lipped edges or drain pan and tapped drainage openings. Pump shall be provided with shaft coupling guard. Pump motor shall have the required capacity to prevent overloading with pump operating at any point on its characteristic curve. Pump speed shall not exceed 3,600 rpm, except where the pump head is less than 180 kPa, the pump speed shall not exceed 1,750 rpm. Pump shall be accessible for servicing without disturbing piping connections.

2.6.1.2 Mechanical Shaft Seals

Seals shall be single, inside mounted, end-face-elastomer bellows type with stainless steel spring, brass or stainless steel seal head, carbon rotating face, and tungsten carbide or ceramic sealing face. Glands shall be bronze and of the water-flush design to provide lubrication flush across the face of the seal. Bypass line from pump discharge to flush connection in gland shall be provided, with filter or cyclone separator in line.

2.6.1.3 Stuffing-Box Type Seals

Stuffing box shall include minimum 4 rows of square, impregnated TFE (Teflon) or graphite cord packing and a bronze split-lantern ring. Packing gland shall be bronze interlocking split type.

2.6.2 Expansion Tanks

Expansion tanks shall be welded steel, constructed, tested and stamped in

accordance with ASME BPV VIII Div 1 for a working pressure of 862 kPa (125 psig) and precharged to the minimum operating pressure. Expansion tanks shall have a replaceable diaphragm and be the captive air type. Tanks shall accommodate expanded water of the system generated within the normal operating temperature range, limiting this pressure increase at all components in the system to the maximum allowable pressure at those components. Each tank air chamber shall be fitted with an air charging valve. Tanks shall be supported by steel legs or bases for vertical installation or steel saddles for horizontal installations. The only air in the system shall be the permanent sealed-in air cushion contained within the expansion tank.

2.6.3 Air Separator Tanks

External air separation tank shall be steel, constructed, tested, and stamped in accordance with ASME BPV VIII Div 1 for a working pressure of 862 kPa (125 psig).

2.6.4 Signs

Metal signs shall be provided having letters not less than 12 mm in height designating the main shut-off valves to each refrigerant vessel, the electrical control of the chiller, and the pressure limiting device.

2.6.5 Field Installed Insulation

Field installed insulation shall be as specified in Section 15080 THERMAL INSULATION FOR MECHANICAL SYSTEMS, except for header and waterbox insulation which shall be flexible cellular insulation in accordance with ASTM C 534, Type I.

2.6.6 Gaskets

Gaskets shall conform to ASTM F 104 - classification for compressed sheet with nitrile binder and acrylic fibers for maximum 371 degrees C (700 degrees F) service.

2.6.7 Bolts and Nuts

Bolts and nuts, except as required for piping applications, shall be in accordance with ASTM A 307. The bolt head shall be marked to identify the manufacturer and the standard with which the bolt complies in accordance with ASTM A 307.

2.7 WATER TREATMENT SYSTEMS

When water treatment is specified, the use of chemical-treatment products containing hexavalent chromium (Cr) is prohibited.

2.7.1 Water Analysis

For conditions of make-up water to be supplied to the chilled water systems see Section 15569 WATER HEATING, GAS, UP TO 20 MBTUH

2.7.2 Chilled Water

Water to be used in the chilled water systems shall be treated to maintain the conditions recommended by this specification as well as the

recommendations from the manufacturers of the evaporator coils. Chemicals shall meet all required federal, state, and local environmental regulations for the treatment of evaporator coils and direct discharge to the sanitary sewer.

2.7.3 Water Treatment Services

The services of a company regularly engaged in the treatment of chilled water systems shall be used to determine the correct chemicals required, the concentrations required, and the water treatment equipment sizes and flow rates required. The company shall maintain the chemical treatment and provide all chemicals required for the chilled water systems for a period of 1 year from the date of occupancy. The chemical treatment and services provided over the 1 year period shall meet the requirements of this specification as well as the recommendations from the manufacturers of the condenser and evaporator coils. Acid treatment and proprietary chemicals shall not be used.

2.7.4 Chilled Water System

A shot feeder shall be provided on the chilled water piping as indicated. Size and capacity of feeder shall be based on local requirements and water analysis. The feeder shall be furnished with an air vent, gauge glass, funnel, valves, fittings, and piping.

2.8 PIPING COMPONENTS

2.8.1 Water Piping and Fittings

2.8.1.1 Steel Pipe

Steel pipe shall conform to ASTM A 53, Schedule 40, Type E or S, Grades A or B. Type F pipe shall not be used.

2.8.1.2 Steel Pipe Joints and Fittings

Joints and fittings shall be welded, flanged, threaded, or grooved as indicated. If not otherwise indicated, piping 25 mm (1 inch) and smaller shall be threaded; piping larger than 25 mm (1 inch) and smaller than 80 mm (3 inches) shall be either threaded, grooved, or welded; and piping 80 mm (3 inches) and larger shall be grooved, welded, or flanged. Rigid grooved mechanical joints and fittings may only be used in serviceable aboveground locations where the temperature of the circulating medium does not exceed 110 degrees C. Flexible grooved joints shall be used only as a flexible connector with grooved pipe system. Unless otherwise specified, grooved piping components shall meet the corresponding criteria specified for the similar welded, flanged, or threaded component specified herein. The manufacturer of each fitting shall be permanently identified on the body of the fitting in accordance with MSS SP-25.

a. Welded Joints and Fittings: Welded fittings shall conform to ASTM A 234/A234M, and identified with the appropriate grade and marking symbol. Butt-welding fittings shall conform to ASME B16.9. Socket-welding and threaded fittings shall conform to ASME B16.11.

b. Flanged Joints and Fittings: Flanges shall conform to ASTM A 181/A181M and ASME B16.5 Class 150. Gaskets shall be nonasbestos compressed material in accordance with ASME B16.21, 1.59 mm (1/16 inch) thickness, full face or self-centering flat ring type.

This gaskets shall contain aramid fibers bonded with styrene butadeine rubber (SBR) or nitrile butadeine rubber (NBR). Bolts, nuts, and bolt patterns shall conform to ASME B16.5. Bolts shall be high or intermediate strength material conforming to ASTM A 193/A193M.

c. Threaded Joints and Fittings: Threads shall conform to ASME B1.20.1. Pipe nipples shall conform to ASTM A 733, type and material to match adjacent piping. Unions shall conform to ASME B16.39, type as required to match adjacent piping.

d. Dielectric Unions and Flanges: Dielectric unions shall have the tensile strength and dimensional requirements specified. Unions shall have metal connections on both ends threaded to match adjacent piping. Metal parts of dielectric unions shall be separated with a nylon insulator to prevent current flow between dissimilar metals. Unions shall be suitable for the required operating pressures and temperatures. Dielectric flanges shall provide the same pressure ratings as standard flanges and provide complete electrical isolation.

e. Grooved Mechanical Joints and Fittings: Joints and fittings shall be designed for not less than 862 kPa (125 psig) service and shall be the product of the same manufacturer. Fitting and coupling houses shall be malleable iron conforming to ASTM A 47, Grade 32510; ductile iron conforming to ASTM A 536, Grade 65-45-12; or steel conforming ASTM A 106, Grade B or ASTM A 53. Gaskets shall be molded synthetic rubber with central cavity, pressure responsive configuration and shall conform to ASTM D 2000 Grade No. 2CA615A15B44F17Z for circulating medium up to 110 degrees C (230 degrees F) or Grade No. M3BA610A15B44Z for circulating medium up to 93 degrees C (200 degrees F). Grooved joints shall conform to AWWA C606. Coupling nuts and bolts shall be steel and shall conform to ASTM A 183.

2.8.1.3 Copper Tube

Copper tubing for water service shall conform to ASTM B 88, Type K or L.

2.8.1.4 Copper Tube Joints and Fittings

Wrought copper and bronze solder-joint pressure fittings shall conform to ASME B16.22 and ASTM B 75. Cast copper alloy solder-joint pressure fittings shall conform to ASME B16.18. Cast copper alloy fittings for flared copper tube shall conform to ASME B16.26 and ASTM B 62. Brass or bronze adapters for brazed tubing may be used for connecting tubing to flanges and to threaded ends of valves and equipment. Extracted brazed tee joints produced with an acceptable tool and installed as recommended by the manufacturer may be used.

2.8.2 Water Piping Valves and Accessories

Valves shall be rated for Class 125 and shall be suitable for operating temperature of 120 degrees C (250 degrees F). Valves shall be suitable for the working pressure of the pipe in which installed. Valves shall meet the material, fabrication and operating requirements of ASME B31.1. Chain operators shall be provided for valves located 3 m or higher above the floor. Valves in sizes larger than 25 mm (1 inch) and used on steel pipe systems, may be provided with rigid grooved mechanical joint ends. Such

grooved end valves shall be subject to the same requirements as rigid grooved mechanical joints and fittings and, shall be provided by the same manufacturer as the grooved pipe joint and fitting system. All valves in insulated lines shall have extended neck to accomodate insulation thickness.

2.8.2.1 Gate Valves

Gate valves 65 mm (2-1/2 inches) and smaller shall conform to MSS SP-80 and shall be bronze with rising stem and threaded, soldered, or flanged ends. Gate valves 80 mm (3 inches) and larger shall conform to MSS SP-70, Type I, II, Class 125, Design OF and shall be cast iron with bronze trim, outside screw and yoke, and flanged or threaded ends.

2.8.2.2 Globe and Angle Valves

Globe and angle valves 65 mm (2-1/2 inches) and smaller shall conform to MSS SP-80 and shall be bronze with threaded, soldered, or flanged ends. Globe and angle valves 80 mm (3 inches) and larger shall conform to MSS SP-85 and shall be cast iron with bronze trim and flanged or threaded ends.

2.8.2.3 Check Valves

Check valves 65 mm (2-1/2 inches) and smaller shall conform to MSS SP-80 and shall be bronze with threaded, soldered, or flanged ends. Check valves 80 mm (3 inches) and larger shall conform to MSS SP-71, Type I, II, III, or IV, Class 125 or 150 and shall be cast iron with bronze trim and flanged or threaded ends.

2.8.2.4 Butterfly Valves

Butterfly valves shall be in accordance with MSS SP-67, Type 1 and shall be 2 flange or lug wafer type, and shall be bubble tight at 1,000 kPa (150 psig). Valve bodies shall be cast iron, malleable iron, or steel. Valves smaller than 200 mm (8 inches) shall have throttling handles with a minimum of seven locking positions. Valves 200 mm (8 inches) and larger shall have totally enclosed manual gear operators with adjustable balance return stops and position indicators. Valves in insulated lines shall have extended neck to accommodate insulation thickness.

2.8.2.5 Plug Valves

Plug valves 50 mm (2 inches) and larger shall conform to MSS SP-78, have flanged or threaded ends, and have cast iron bodies with bronze trim. Valves 50 mm (2 inches) and smaller shall be bronze with NPT connections for black steel pipe and brazed connections for copper tubing. Valves shall be lubricated, non-lubricated, or tetrafluoroethylene resin-coated type. Valves shall be resilient, double seated, trunnion mounted with tapered lift plug capable of 2-way shutoff. Valves shall operate from fully open to fully closed by rotation of the handwheel to lift and turn the plug. Valves shall a weatherproof operators with mechanical position indicators. Valves 200 mm (8 inches) or larger shall be provided with manual gear operators with position indicators.

2.8.2.6 Ball Valves

Ball valves 15 mm (1/2 inch) and larger shall conform to MSS SP-72 or MSS SP-110 and shall be ductile iron or bronze with threaded, soldered, or flanged ends. Valves 200 mm (8 inches) or larger shall be provided with manual gear operators with position indicators.

2.8.2.7 Calibrated Balancing Valves

Each valve shall be calibrated so that flow can be determined when the temperature and pressure differential across valve is known. Valves shall have an integral pointer which registers the degree of valve opening. Each valve shall be constructed with internal seals to prevent leakage and shall be supplied with preformed insulation. Valves Cv rating shall be as indicated. Valve bodies shall be provided with tapped openings and pipe extensions with positive shutoff valves outside of pipe insulation. The pipe extensions shall be provided with quick connecting hose fittings for a portable meter to measure the pressure differential. One portable differential meter, suitable for the operating pressure specified, shall be provided. The meter shall be complete with hoses, vent, integral metering connections, and carrying case as recommended by the valve manufacturer. In lieu of the balancing valve with integral metering connections, a ball valve or plug valve with a separately installed orifice plate or venturi tube may be used for balancing.

2.8.2.8 Air Vents

Manual air vents shall be brass or bronze valves or cocks suitable for 862 kpa (125 psig) service, and furnished with threaded plugs or caps. Automatic air vents shall be float type, cast iron, stainless steel, or forged steel construction, suitable for 862 kpa (125 psig) service.

2.8.2.9 Strainers

Strainers shall be in accordance with ASTM F 1199, except as modified herein. Strainer shall be the cleanable, basket or "Y" type, the same size as the pipeline. The strainer bodies shall be fabricated of cast iron with bottoms drilled, and tapped. The bodies shall have arrows clearly cast on the sides indicating the direction of flow. Each strainer shall be equipped with removable cover and sediment screen. The screen shall be made of minimum 0.8 mm (22 gauge) corrosion-resistant steel, with small perforations numbering not less than 60 per square centimeter (400 per square inch) to provide a net free area through the basket of at least 3.30 times that of the entering pipe. The flow shall be into the screen and out through the perforations.

2.8.2.10 Combination Strainer and Suction Diffuser

A combination strainer and suction diffuser, consisting of an angle type body with removable strainer basket and straightening vanes, a suction pipe support, and a blowdown outlet, shall be provided on pump suction. The combination strainer and suction diffuser shall be in accordance with ASTM F 1199, except as modified herein.

2.8.2.11 Backflow Preventers

Backflow preventers shall be in accordance with Section 15400 PLUMBING, GENERAL PURPOSE.

2.8.2.12 Flexible Pipe Connectors

Flexible pipe connectors shall be designed for 862 kpa (125 psig) or 1034 kPa (150 psig) service as appropriate for the static head plus the system head, and 110 degrees C (230 degrees F), for grooved end flexible connectors. The flexible section shall be constructed of rubber,

tetrafluoroethylene resin, or corrosion-resisting steel, bronze, monel, or galvanized steel. The flexible section shall be suitable for intended service with end connections to match adjacent piping. Flanged assemblies shall be equipped with limit bolts to restrict maximum travel to the manufacturer's standard limits. Unless otherwise indicated, the length of the flexible connectors shall be as recommended by the manufacturer for the service intended. Internal sleeves or liners, compatible with circulating medium, shall be provided when recommended by the manufacturer. Covers to protect the bellows shall be provided where indicated.

2.8.2.13 Pressure Gauges

Gauges shall conform to ASME B40.1 and shall be provided with throttling type needle valve or a pulsation dampener and shut-off valve. Gauge shall be a minimum of 85 mm in diameter with a range from 0 kPa (0 psig) to approximately 1.5 times the maximum system working pressure.

2.8.2.14 Thermometers

Thermometers shall have brass, malleable iron, or aluminum alloy case and frame, clear protective face, permanently stabilized glass tube with indicating-fluid column, white face, black numbers, and a 225 mm (9 inch) scale. Thermometers shall have rigid stems with straight, angular, or inclined pattern.

2.8.2.15 Pipe Nipples

Pipe nipples shall be in accordance with ASTM A 733 and be of material to match adjacent piping.

2.8.2.16 Pipe Unions

Pipe unions shall be in accordance with ASME B16.39 and be of material to match adjacent piping.

2.8.2.17 Solder

Solder for water piping shall be in accordance with ASTM B 32, alloy grade 50B.

2.8.3 Refrigerant Piping and Fittings

Refrigerant piping, valves, fittings, and accessories shall conform to the requirements of ASHRAE 15 and ASME B31.5, except as specified.

2.8.3.1 Steel Pipe

Steel pipe for refrigerant service shall conform to ASTM A 53, Schedule 40, Type E or S, Grades A or B. Type F pipe shall not be used.

2.8.3.2 Steel Pipe Joints and Fittings

Joints and fittings shall be steel butt-welding, socket-welding, or malleable iron threaded type. Pipe shall be welded except that joints on lines 50 mm (2 inches) and smaller may be threaded. Threads shall be tapered type conforming to ASME B1.20.1. The malleable iron threaded type fitting shall be of a weight corresponding to adjacent pipe. Flanges and flange faces of fittings shall be tongue-and-groove type with gaskets suitable for the refrigerant used; size 25 mm (1 inch) and smaller shall

be oval, two-bolt type; size above 25 mm (1 inch), up to and including 100 mm (4 inches), shall be square four-bolt type; and sizes over 100 mm (4 inches) shall be round.

2.8.3.3 Steel Tubing

Steel tubing for refrigeration service shall be in accordance with ASTM A 334/A334M, Grade 1. Tubing with a nominal diameter of 10 mm (3/8 inch) or 15 mm (1/2 inch) shall have a wall thickness of 1.24 mm (0.049 inches). Tubing with a nominal diameter of 20 mm (3/4 inch) through 50 mm (2 inches) shall have a wall thickness of 1.65 mm (0.065 inches). Tubing with a nominal diameter of 65 mm (2-1/2 inches) through 100 mm (4 inches) shall have a wall thickness of 2.41 mm (0.095 inches). Steel tubing shall be cold-rolled, electric-forged, welded-steel. One end of the tubing shall be provided with a socket. Steel tubing shall be cleaned, dehydrated, and capped.

2.8.3.4 Steel Tubing Joints and Fittings

Joints and fittings shall be socket type provided by the steel tubing manufacturer.

2.8.3.5 Copper Tubing

Copper tubing shall conform to ASTM B 280 annealed or hard drawn as required. Copper tubing shall be soft annealed where bending is required and hard drawn where no bending is required. Soft annealed copper tubing shall not be used in sizes larger than 35 mm (1-3/8 inches). Joints shall be brazed except that joints on lines 22 mm (7/8 inch) and smaller may be flared.

2.8.3.6 Copper Tube Joints and Fittings

Copper tube joints and fittings shall be flare joint type with short-shank flare, or solder-joint pressure type. Joints and fittings for brazed joint shall be wrought-copper or forged-brass sweat fittings. Cast sweat-type joints and fittings shall not be allowed for brazed joints.

2.8.4 Refrigerant Piping, Valves, and Accessories

Valves shall be pressure and temperature rates for contained refrigerant service and shall comply with ASME B31.5. Metals of constructions shall be ferrous or copper based. Atmosphere exposed valve stems shall be stainless steel or corrosion resistant metal plated carbon steel. Valve body connections shall not be used, except in pilot pressure or gauge lines where maintenance disassembly is required and welded flanges cannot be used. Valves shall be suitable for or fitted with extended copper ends for brazing in-place without disassembly. Ferrous body valves shall be fitted with factory fabricated and brazed copper transitions. To minimize system pressure drops, where practicable, globe valves shall be angle body type, and straight line valves shall be full port ball type. Control valve inlets shall be fitted with integral or adapted strainer or filter where recommended or required by the manufacturer. Valves shall be cleaned and sealed moisture-tight.

2.8.4.1 Refrigerant-Stop Valves

Valves, in sizes through 15 mm (5/8 inch), shall be handwheel operated, straight or angle, packless diaphragm globe type with back-seating stem,

brazed ends, except where SAE flare or retained seal cap connections are required. In sizes over 15 mm (5/8 inch), valves shall be globe or angle type, wrench operated with ground-finish stems, or ball valves, packed especially for refrigerant service, back seated, and provided with seal caps. Refrigerant isolation and shut-off valves shall have retained or captive spindles and facilities for tightening or replacement of the gland packing under line pressure as applicable. Stop valves hall have back-seating plated steel stem, bolted bonnet in sizes 25 mm (1-1/8 inches) OD and larger, integral or flanged transition brazed socket. Valves in sizes through 65 mm (2-1/2 inches) shall be end-entry body assembly, full-port, floating ball type, with equalizing orifice fitted chrome plated ball, seats and seals of tetrafluoroethylene, chrome plated or stainless steel stem, and seal cap. In sizes 100 mm (4 inch) IPS and larger, and in smaller sizes where carbon steel piping is used, valve bodies shall be tongue and groove flanged and complete with mating flange, gaskets and bolting for socket or butt-welded connection. Purge, charge and receiver valves shall be of manufacturer's standard configuration.

2.8.4.2 Check Valves

Valve shall be designed for service application, spring-loaded type where required, with resilient seat and with flanged body in sizes 15 mm (1/2 inch) and larger. Valve shall provide positive shutoff at 14kPa (2 psi) differential pressure.

2.8.4.3 Liquid Solenoid Valves

Valves shall comply with ARI 760 and be suitable for continuous duty with applied voltages 15 percent under and 5 percent over nominal rated voltage at maximum and minimum encountered pressure and temperature service conditions. Valves shall be direct-acting or pilot-operating type, packless, except that packed stem, seal capped, manual lifting provisions shall be furnished. Solenoid coils shall be moisture-proof, UL approved, totally encapsulated or encapsulated and metal jacketed as required. Valves shall have safe working pressure of 2760 kPa (400 psi) and a maximum operating pressure differential of at least 1375 kPa (200 psi) at 85 percent rated voltage. Valves shall have an operating pressure differential suitable for the refrigerant used.

2.8.4.4 Expansion Valves

Expansion valves shall conform to requirements of ARI 750. Valve shall be of the diaphragm and spring type with internal or external equalizers, and bulb and capillary tubing. Valve shall be provided with an external superheat adjustment along with a seal cap. Internal equalizers may be utilized where flowing refrigerant pressure drop between outlet of the valve and inlet to the evaporator coil is negligible and pressure drop across the evaporator is less than the pressure difference corresponding to 1 degrees C (2 degrees F) of saturated suction temperature at evaporator conditions. Bulb charge shall be determined by the manufacturer for the application and such that liquid will remain in the bulb at all operating conditions. Gas limited liquid charged valves and other valve devices for limiting evaporator pressure shall not be used without a distributor or discharge tube or effective means to prevent loss of control when bulb becomes warmer than valve body. Pilot-operated valves shall have a characterized plug to provide required modulating control. A de-energized solenoid valve may be used in the pilot line to close the main valve in lieu of a solenoid valve in the main liquid line. An isolatable pressure gauge shall be provided in the pilot line, at the main valve. Automatic

pressure reducing or constant pressure regulating expansion valves may be used only where indicted or for constant evaporator loads.

2.8.4.5 Safety Relief Valves

Valve shall be two-way type. Single type valves shall be used only where indicated. Valve shall bear the ASME code symbol. Valve capacity shall be certified by the National Board of Boiler and Pressure Vessel Inspectors. Valve shall be of an automatically reseating design after activation.

2.8.4.6 Evaporator Pressure Regulators, Direct-Acting

Valve shall include a diaphragm/spring assembly, external pressure adjustment with seal cap, and pressure gauge port. Valve shall maintain a constant inlet pressure by balancing inlet pressure on diaphragm against an adjustable spring load. Pressure drop at system design load shall not exceed the pressure difference corresponding to a 1 degrees C change in saturated refrigerant temperature at evaporator operating suction temperature. Spring shall be selected for indicated maximum allowable suction pressure range.

2.8.4.7 Refrigerant Access Valves

Refrigerant access valves and hose connections shall be in accordance with ARI ANSI/ARI 720.

2.8.4.8 Filter Driers

Driers shall conform to ARI ANSI/ARI 710. Sizes 15 mm (5/8 ich) and larger shall be the full flow, replaceable core type. Sizes 15 mm (1/2 inch) and smaller shall be the sealed type. Cores shall be of suitable desiccant that will not plug, cake, dust, channel, or break down, and shall remove water, acid, and foreign material from the refrigerant. Filter driers shall be constructed so that none of the desiccant will pass into the refrigerant lines. Minimum bursting pressure shall be 10.3 MPa (1.500 psi).

2.8.4.9 Sight Glass and Liquid Level Indicator

a. Assembly and Components: Assembly shall be pressure- and temperature-rated and constructed of materials suitable for the service. Glass shall be borosilicate type. Ferrous components subject to condensation shall be electro-galvanized.

b. Gauge Glass: Gauge glass shall include top and bottom isolation valves fitted with automatic checks, and packing followers; red-line or green-line gauge glass; elastomer or polymer packing to suit the service; and gauge glass guard.

c. Bull's-Eye and Inline Sight Glass Reflex Lens: Bull's-eye and inline sight glass reflex lens shall be provided for dead-end liquid service. For pipe line mounting, two plain lenses in one body suitable for backlighted viewing shall be provided.

d. Moisture Indicator: Indicator shall be a self-reversible action, moisture reactive, color changing media. Indicator shall be furnished with full-color-printing tag containing color, moisture and temperature criteria. Unless otherwise indicated, the moisture indicator shall be an integral part of each corresponding

sight glass.

2.8.4.10 Vibration Dampeners

Dampeners shall be of the all-metallic bellows and woven-wire type.

2.8.4.11 Flexible Pipe Connectors

Connector shall be pressure and temperature rated for the service in accordance with ASHRAE 15 and ASME B31.5. Connector shall be a composite of interior corrugated phosphor bronze or Type 300 Series stainless steel, as required for fluid service, with exterior reinforcement of bronze, stainless steel or monel wire braid. Assembly shall be constructed with a safety factor of not less than 4 at 150 degrees C (300 degrees F). Unless otherwise indicated, the length of a flexible connector shall be as recommended by the manufacturer for the service intended.

2.8.4.12 Strainers

Strainers used in refrigerant service shall have brass or cast iron body, Y-or angle-pattern, cleanable, not less than 60-mesh noncorroding screen of an area to provide net free area not less than ten times the pipe diameter with pressure rating compatible with the refrigerant service. Screens shall be stainless steel or monel and reinforced spring-loaded where necessary for bypass-proof construction.

2.8.4.13 Brazing Materials

Brazing materials for refrigerant piping shall be in accordance with AWS A5.8, Classification BCuP-5.

2.8.5 Escutcheons

Escutcheons shall be chromium-plated iron or chromium-plated brass, either one piece or split pattern, held in place by internal spring tension or set screws.

2.8.6 Pipe Hangers, Inserts, and Supports

Pipe hangers, inserts, and supports shall conform to MSS SP-58 and MSS SP-69.

2.9 FABRICATION

2.9.1 Factory Coating

Unless otherwise specified, equipment and component items, when fabricated from ferrous metal, shall be factory finished with the manufacturer's standard finish, except that items located outside of buildings shall have weather resistant finishes that will withstand 125 hours exposure to the salt spray test specified in ASTM B 117 using a 5 percent sodium chloride solution. Immediately after completion of the test, the specimen shall show no signs of blistering, wrinkling, cracking, or loss of adhesion and no sign of rust creepage beyond 3 mm on either side of the scratch mark. Cut edges of galvanized surfaces where hot-dip galvanized sheet steel is used shall be coated with a zinc-rich coating conforming to ASTM D 520, Type I.

2.9.2 Field Painting

Painting required for surfaces not otherwise specified, and finish painting of items only primed at the factory are specified in Section 09900 PAINTING, GENERAL.

2.9.2.1 Color Coding

Color coding for piping identification is specified in Section 09900 PAINTING, GENERAL.

2.10 SUPPLEMENTAL COMPONENTS/SERVICES

2.10.1 Drain and Makeup Water Piping

Piping shall comply with the requirements of Section 15400 PLUMBING, GENERAL PURPOSE. Drains which connect to sanitary sewer system shall be connected by means of an indirect waste.

PART 3 EXECUTION

3.1 INSTALLATION

All work shall be performed in accordance with the manufacturer's published diagrams, recommendations, and equipment warranty requirements. Where equipment is specified to conform to the requirements of ASME BPV VIII Div 1 and ASME BPV IX, the design, fabrication, and installation of the system shall conform to ASME BPV VIII Div 1 and ASME BPV IX.

3.1.1 Refrigeration System

3.1.1.1 Equipment

Necessary supports shall be provided for all equipment, appurtenances, and pipe as required, including frames or supports for compressors, pumps, condensers, liquid coolers, and similar items. If mechanical vibration isolators are not provided, vibration absorbing foundations shall be provided. Each foundation shall include isolation units consisting of machine and floor or foundation fastenings, together with intermediate isolation material. Other floor-mounted equipment shall be set on not less than a 150 mm concrete pad doweled in place. Concrete foundations for floor mounted pumps shall have a mass equivalent to three times the weight of the components, pump, base plate, and motor to be supported. In lieu of concrete pad foundation, concrete pedestal block with isolators placed between the pedestal block and the floor may be provided. Concrete pedestal block shall be of mass not less than three times the combined pump, motor, and base weights. Isolators shall be selected and sized based on load-bearing requirements and the lowest frequency of vibration to be isolated. Isolators shall limit vibration to 30 percent at lowest equipment rpm. Lines connected to pumps mounted on pedestal blocks shall be provided with flexible connectors. Foundation drawings, bolt-setting information, and foundation bolts shall be furnished prior to concrete foundation construction for all equipment indicated or required to have concrete foundations. Concrete for foundations and concrete-structured or cased-cooling towers shall be as specified in Section 03300 CAST-IN-PLACE STRUCTURAL CONCRETE. Equipment shall be properly leveled, aligned, and secured in place in accordance with manufacturer's instructions.

3.1.1.2 Refrigerant Charging

a. Initial Charge: Upon completion of all the refrigerant pipe

tests, the vacuum on the system shall be broken by adding the required charge of dry refrigerant for which the system is designed, in accordance with the manufacturer's recommendations. Contractor shall provide the complete charge of refrigerant in accordance with manufacturer's recommendations. Upon satisfactory completion of the system performance tests, any refrigerant that has been lost from the system shall be replaced. After the system is fully operational, service valve seal caps and blanks over gauge points shall be installed and tightened.

b. Refrigerant Leakage: If a refrigerant leak is discovered after the system has been charged, the leaking portion of the system shall immediately be isolated from the remainder of the system and the refrigerant shall be pumped into the system receiver or other suitable container. The refrigerant shall not be discharged into the atmosphere.

c. Contractor's Responsibility: The Contractor shall, at all times during the installation and testing of the refrigeration system, take steps to prevent the release of refrigerants into the atmosphere. The steps shall include, but not be limited to, procedures which will minimize the release of refrigerants to the atmosphere and the use of refrigerant recovery devices to remove refrigerant from the system and store the refrigerant for reuse or reclaim. At no time shall more than 85 g of refrigerant be released to the atmosphere in any one occurrence. Any system leaks within the first year shall be repaired in accordance with the specified requirements including material, labor, and refrigerant if the leak is the result of defective equipment, material, or installation.

3.1.1.3 Oil Charging

Except for factory sealed units, two complete charges of lubricating oil for each compressor crankcase shall be furnished. One charge shall be used during the performance testing period, and upon the satisfactory completion of the tests, the oil shall be drained and replaced with the second charge.

3.1.1.4 Automatic Controls

Automatic controls for the central refrigeration system specified in paragraph REFRIGERATION SYSTEM shall be provided with the central refrigeration equipment. These controls shall operate automatically to balance the equipment capacity with the load on the air conditioning system, and shall be fully coordinated with and integrated into the temperature control system specified in Section 15895 AIR SUPPLY, DISTRIBUTION, VENTILATION, AND EXHAUST SYSTEM and 15950 HEATING, VENTILATING AND AIR CONDITIONING (HVAC) CONTROL SYSTEMS.

3.1.2 General Piping Installation

3.1.2.1 Brazed Joints

Before brazing copper joints, both the outside of the tube and the inside of the fitting shall be cleaned with a wire fitting brush until the entire joint surface is bright and clean. Brazing flux shall not be used. Surplus brazing material shall be removed at all joints. Steel tubing joints shall be made in accordance with the manufacturer's recommendations. Joints in steel tubing shall be painted with the same material as the

baked-on coating within 8 hours after joints are made. Tubing shall be protected against oxidation during brazing by continuous purging of the inside of the piping using nitrogen. All piping shall be supported prior to brazing and shall not be sprung or forced.

3.1.2.2 Threaded Joints

Threaded joints shall be made with tapered threads and made tight with PTFE tape complying with ASTM D 3308 or equivalent thread-joint compound applied to the male threads only. Not more than three threads shall show after the joint is made.

3.1.2.3 Welded Joints

Welding shall be in accordance with qualified procedures using qualified welders and welding operators. Procedures and welders shall be qualified in accordance with ASME BPV IX. Welding procedures qualified by others, and welders and welding operators qualified by another employer may be accepted as permitted by ASME B31.1. Contracting Officer shall be notified 24 hours in advance of welding tests and the tests shall be performed at the work site if practical. A permanent mark shall be applied near each weld to identify the welder who made that weld. Structural members shall be welded in accordance with Section 05055 WELDING, STRUCTURAL. Welded joints in steel refrigerant piping shall be fusion-welded. Changes in direction of piping shall be made with welded fittings only; mitering or notching pipe or other similar construction to form elbows or tees will not be permitted. Branch connections shall be made with welding tees or forged welding branch outlets. Steel pipe shall be thoroughly cleaned of all scale and foreign matter before the piping is assembled. During welding the pipe and fittings shall be filled with an inert gas, such as nitrogen, to prevent the formation of scale. Beveling, alignment, heat treatment, and inspection of weld shall conform to ASME B31.1. Weld defects shall be removed and rewelded at no additional cost to the Government. Electrodes shall be stored and dried in accordance with AWS D1.1 or as recommended by the manufacturer. Electrodes that have been wetted or that have lost any of their coating shall not be used.

3.1.2.4 Flanged Joints

Flanged joints shall be faced true, provided with gaskets suitable for use with refrigerants and made square and tight. When steel refrigerant piping is used, union or flange joints shall be provided in each line immediately preceding the connection to each piece of equipment requiring maintenance, such as compressors, coils, chillers, control valves, and other similar items.

3.1.2.5 Flared Connections

When flared connections are used, a suitable lubricant shall be used between the back of the flare and the nut in order to avoid tearing the flare while tightening the nut.

3.1.2.6 Thermometers

Thermometers shall be located specifically on, but not limited to the following: the sensing element of each automatic temperature control device where a thermometer is not an integral part thereof, the liquid line leaving receiver and the suction line at each evaporator or liquid cooler.

3.1.2.7 Supports

a. General: All refrigerant pipe supports shall be in accordance with ASME B31.5. Hangers used to support piping 50 mm (2 inches) and larger shall be fabricated to permit adequate adjustment after erection while still supporting the load. Pipe guides and anchors shall be installed to keep pipes in accurate alignment, to direct the expansion movement, and to prevent buckling, swaying, and undue strain. Piping subjected to vertical movement, when operating temperatures exceed ambient temperatures, shall be supported by variable spring hangers and supports or by constant support hangers.

b. Seismic Requirements: Equipment shall be supported and braced to resist seismic loads as specified under Section 13080 SEISMIC PROTECTION FOR MECHANICAL, ELECTRICAL EQUIPMENT as shown on the drawings. Structural steel required for reinforcement to properly support piping, headers, and equipment but not shown shall be provided under this section. Material used for support shall be as specified under Section 05120 STRUCTURAL STEEL.

c. Structural Attachments: Structural steel brackets required to support piping, headers, and equipment, but not shown, shall be provided under this section. Material and installation shall be as specified under Section 05120 STRUCTURAL STEEL.

3.1.2.8 Pipe Hangers, Inserts, and Supports

Pipe hangers, inserts, and supports shall conform to MSS SP-58 and MSS SP-69, except as modified herein. Pipe hanger types 5, 12, and 26 shall not be used.

a. Hangers: Type 3 shall not be used on insulated piping.

b. Inserts: Type 18 inserts shall be secured to concrete forms before concrete is placed. Continuous inserts which allow more adjustments may be used if they otherwise meet the requirements for Type 18 inserts.

c. C-Clamps: Type 19 and 23 C-clamps shall be torqued per MSS SP-69 and have both locknuts and retaining devices, furnished by the manufacturer. Field-fabricated C-clamp bodies or retaining devices are not acceptable.

d. Angle Attachments: Type 20 attachments used on angles and channels shall be furnished with an added malleable-iron heel plate or adapter.

e. Hangers: Type 24 may be used only on trapeze hanger systems or on fabricated frames.

f. Saddles and Shields: Where Type 39 saddle or Type 40 shield are permitted for a particular pipe attachment application, the Type 39 saddle, connected to the pipe, shall be used on all pipe 100 mm (4 inches) and larger when the temperature of the medium is 16 degrees C or higher. Type 40 shields shall be used on all piping less than 100 mm (4 inches) and all piping 100 mm (4 inches) and larger carrying medium less than 16 degrees C. A high density insulation insert of cellular glass shall be used under the Type

40 shield for piping 50 mm (2 inches) and larger.

g. Horizontal Pipe Supports: Horizontal pipe supports shall be spaced as specified in MSS SP-69 and a support shall be installed not over 300 mm from the pipe fitting joint at each change in direction of the piping. Pipe supports shall be spaced not over 1.5 m apart at valves. Pipe hanger loads suspended from steel joist with hanger loads between panel points in excess of 22 kg shall have the excess hanger loads suspended from panel points.

h. Vertical Pipe Supports: Vertical pipe shall be supported at each floor, except at slab-on-grade, and at intervals of not more than 4.5 m, not more than 2.4 m from end of risers, and at vent terminations.

i. Pipe Guides: Type 35 guides using, steel, reinforced polytetrafluoroethylene (PTFE) or graphite slides shall be provided where required to allow longitudinal pipe movement. Lateral restraints shall be provided as required. Slide materials shall be suitable for the system operating temperatures, atmospheric conditions, and bearing loads encountered.

j. Steel Slides: Where steel slides do not require provisions for restraint of lateral movement, an alternate guide method may be used. On piping 100 mm (4 inches) and larger, a Type 39 saddle shall be used. On piping under 100 mm (4 inches), a Type 40 protection shield may be attached to the pipe or insulation and freely rest on a steel slide plate.

k. High Temperature Guides with Cradles: Where there are high system temperatures and welding to piping is not desirable, then the Type 35 guide shall include a pipe cradle, welded to the guide structure and strapped securely to the pipe. The pipe shall be separated from the slide material by at least 100 mm, or by an amount adequate for the insulation, whichever is greater.

l. Multiple Pipe Runs: In the support of multiple pipe runs on a common base member, a clip or clamp shall be used where each pipe crosses the base support member. Spacing of the base support members shall not exceed the hanger and support spacing required for an individual pipe in the multiple pipe run.

3.1.2.9 Pipe Alignment Guides

Pipe alignment guides shall be provided where indicated for expansion loops, offsets, and bends and as recommended by the manufacturer for expansion joints, not to exceed 1.5 m on each side of each expansion joint, and in lines 100 mm (4 inches) or smaller not more than 600 mm on each side of the joint.

3.1.2.10 Anchors

Anchors shall be provided wherever necessary or indicated to localize expansion or to prevent undue strain on piping. Anchors shall consist of heavy steel collars with lugs and bolts for clamping and attaching anchor braces, unless otherwise indicated. Anchor braces shall be installed in the most effective manner to secure the desired results using turnbuckles where required. Supports, anchors, or stays shall not be attached where they will injure the structure or adjacent construction during installation

or by the weight of expansion of the pipeline. Detailed drawings of pipe anchors shall be submitted for approval before installation.

3.1.2.11 Pipe Sleeves

Sleeves shall not be installed in structural members except where indicated or approved. Rectangular and square openings shall be as detailed. Each sleeve shall extend through its respective wall, floor, or roof, and shall be cut flush with each surface. Pipes passing through concrete or masonry wall or concrete floors or roofs shall be provided with pipe sleeves fitted into place at the time of construction. Unless otherwise indicated, sleeves shall be of such size as to provide a minimum of 6 mm all-around clearance between bare pipe and sleeves or between jacketed-insulation and sleeves. Sleeves in bearing walls, waterproofing membrane floors, and wet areas shall be steel pipe or cast iron pipe. Sleeves in non-bearing walls, floors, or ceilings may be steel pipe, cast iron pipe, galvanized sheet metal with lock-type longitudinal seam and of the metal thickness indicated, or moisture resistant fiber or plastic. Except in pipe chases or interior walls, the annular space between pipe and sleeve or between jacket over-insulation and sleeve shall be sealed as indicated and specified in Section 07900 JOINT SEALING. Pipes passing through wall waterproofing membrane shall be sleeved as specified above, and a waterproofing clamping flange shall be installed.

a. Roof and Floor Penetrations: Pipes passing through roof or floor waterproofing membrane shall be installed through a 5.17 kg/sq. m. (17 ounce) copper sleeve, or a 0.81 mm (0.032 inch) thick aluminum sleeve, each within an integral skirt or flange. Flashing sleeve shall be suitably formed, and skirt or flange shall extend not less than 200 mm from the pipe and shall be set over the roof or floor membrane in a troweled coating of bituminous cement. The flashing sleeve shall extend up the pipe a minimum of 50 mm above highest floor level of the roof or a minimum of 250 mm above the roof, whichever is greater, or 250 mm above the floor. The annular space between the flashing sleeve and the bare pipe or between the flashing sleeve and the metal-jacket-covered insulation shall be sealed as indicated. Pipes up to and including 250 mm (10 inches) in diameter passing through roof or floor waterproofing membrane may be installed through a cast iron sleeve with caulking recess, anchor lugs, flashing clamp device, and pressure ring with brass bolts. Waterproofing membrane shall be clamped into place and sealant shall be placed in the caulking recess. In lieu of a waterproofing clamping flange and caulking and sealing of annular space between pipe and sleeve or conduit and sleeve, a modular mechanical type sealing assembly may be installed. Seals shall consist of interlocking synthetic rubber links shaped to continuously fill the annular space between the pipe/conduit and sleeve with corrosion protected carbon steel bolts, nuts, and pressure plates. Links shall be loosely assembled with bolts to form a continuous rubber belt around the pipe with a pressure plate under each bolt head and each nut. After the seal assembly is properly positioned in the sleeve, tightening of the bolt shall cause the rubber sealing elements to expand and provide a watertight seal between the pipe/conduit seal between the pipe/conduit and the sleeve. Each seal assembly shall be sized as recommended by the manufacturer to fit the pipe/conduit and sleeve involved. The Contractor electing to use the modular mechanical type seals shall provide sleeves of the proper diameters.

b. Fire-Rated Walls and Partitions: Penetration of fire-rated walls and partitions shall be sealed as specified in Section 07270 FIRESTOPPING.

3.1.2.12 Escutcheons

Finished surfaces where exposed piping, bare or insulated, pass through floors, walls, or ceilings, except in boiler, utility, or equipment rooms, shall be provided with escutcheons. Where sleeves project slightly from floors, special deep-type escutcheons shall be used. Escutcheon shall be secured to pipe or pipe covering.

3.1.2.13 Access Panels

Access panels shall be provided for all concealed valves, vents, controls, and items requiring inspection or maintenance. Access panels shall be of sufficient size and located so that the concealed items may be serviced and maintained or completely removed and replaced. Access panels shall be as specified in Section 05500 MISCELLANEOUS METALS.

3.1.3 Water Piping

Pipe and fitting installation shall conform to the requirements of ASME B31.1. Pipe shall be cut accurately to measurements established at the jobsite, and worked into place without springing or forcing, completely clearing all windows, doors, and other openings. Cutting or other weakening of the building structure to facilitate piping installation will not be permitted without written approval. Pipe or tubing shall be cut square, shall have burrs removed by reaming, and shall permit free expansion and contraction without causing damage to the building structure, pipe, joints, or hangers.

3.1.3.1 Directional Changes

Changes in direction shall be made with fittings, except that bending of pipe 100 mm (4 inches) and smaller will be permitted, provided a pipe bender is used and wide weep bends are formed. The centerline radius of bends shall not be less than 6 diameters of the pipe. Bent pipe showing kinks, wrinkles, flattening, or other malformations will not be accepted.

3.1.3.2 Functional Requirements

Horizontal supply mains shall pitch down in the direction of flow as indicated. The grade shall not be less than 2 mm in 1 m. Reducing fittings shall be used for changes in pipe sizes. Open ends of pipelines and equipment shall be capped or plugged during installation to keep dirt or other foreign materials out of the system. Pipe not otherwise specified shall be uncoated. Connections to appliances shall be made with malleable iron unions for steel pipe 65 mm (2-1/2 inches) or less in diameter, and with flanges for pipe 80 mm (3 inches) and above in diameter. Connections between ferrous and copper piping shall be electrically isolated from each other with dielectric unions or flanges. All piping located in air plenums shall conform to NFPA 90A requirements. Pipe and fittings installed in inaccessible conduits or trenches under concrete floor slabs shall be welded.

3.1.3.3 Valves

Isolation gate or ball valves shall be installed on each side of each piece of equipment, at the midpoint of all looped mains, and at any other points indicated or required for draining, isolating, or sectionalizing purpose. Isolation valves may be omitted where balancing cocks are installed to provide both balancing and isolation functions. Each valve except check valves shall be identified. Valves in horizontal lines shall be installed with stems horizontal or above.

3.1.3.4 Air Vents

Air vents shall be provided at all high points, on all water coils, and where indicated to ensure adequate venting of the piping system.

3.1.3.5 Drains

Drains shall be provided at all low points and where indicated to ensure complete drainage of the piping. Drains shall be accessible, and shall consist of nipples and caps or plugged tees unless otherwise indicated.

3.1.3.6 Flexible Pipe Connectors

Preinsulated flexible pipe connectors shall be attached to other components in strict accordance with the latest printed instructions of the manufacturer to ensure a vapor tight joint. Hangers, when required to suspend the connectors, shall be of the type recommended by the flexible pipe connector manufacturer and shall be provided at the intervals recommended.

3.1.3.7 Flanges and Unions

Except where copper tubing is used, union or flanged joints shall be provided in each line immediately preceding the connection to each piece of equipment or material requiring maintenance such as coils, pumps, control valves, and other similar items.

3.1.3.8 Grooved Mechanical Joints

Grooves shall be prepared in accordance with the coupling manufacturer's instructions. Pipe and groove dimensions shall comply with the tolerances specified by the coupling manufacturer. The diameter of grooves made in the field shall be measured using a "go/no-go" gauge, vernier or dial caliper, or narrow-land micrometer. Groove width and dimension of groove from end of pipe shall be measured and recorded for each change in grooving tool setup to verify compliance with coupling manufacturer's tolerances.

3.1.4 Refrigeration Piping

Unless otherwise specified, pipe and fittings installation shall conform to requirements of ASME B31.5. Pipe shall be cut accurately to measurement established at the jobsite and worked into place without springing or forcing. Cutting or otherwise weakening of the building structure to facilitate piping installation will not be permitted without written approval. Pipes shall be cut square, shall have burrs removed by reaming, and shall be installed in a manner to permit free expansion and contraction without damage to joints or hangers. Filings, dust, or dirt shall be wiped from interior of pipe before connections are made.

3.1.4.1 Directional Changes

Changes in direction shall be made with fittings, except that bending of pipe 100 mm (4 inches) and smaller will be permitted, provided a pipe bender is used and wide-sweep bends are formed. The centerline radius of bends shall not be less than 6 diameters of the pipe. Bent pipe showing kinks, wrinkles, or other malformations will not be accepted.

3.1.4.2 Functional Requirements

All piping shall be installed 4 mm per m of pipe in the direction of flow to ensure adequate oil drainage. Open ends of refrigerant lines or equipment shall be properly capped or plugged during installation to keep moisture, dirt, or other foreign material out of the system. Piping shall remain capped until installation. Equipment piping shall be in accordance with the equipment manufacturer's recommendations and the contract drawings.

3.1.4.3 Valves

a. Stop valves shall be installed on each side of each piece of equipment such as compressors condensers, evaporators, receivers, and other similar items in multiple-unit installation, to provide partial system isolation as required for maintenance or repair. Angle and globe valves shall be installed with stems horizontal unless otherwise indicated. Ball valves shall be installed with stems positioned to facilitate operation and maintenance. All valves except check valves shall be identified with a brass or aluminum tag not less than 35 mm (1-3/8 inch) in diameter, correctly stamped to explain the valve function, and with a number for identification. Tags shall be secured to the valve with No. 12 AWG copper wire.

b. Expansion valves shall be installed with the thermostatic expansion valve bulb located on top of the suction line when the suction line is less than 54 mm (2-1/8 inches) in diameter and at the 4 o'clock or 8 o'clock position on lines larger than 54 mm (2-1/8 inches). The bulb shall be securely fastened with two clamps. The bulb shall be insulated. The bulb shall installed in a horizontal portion of the suction line, if possible, with the pigtail on the bottom. If the bulb must be installed in a vertical line, the bulb tubing shall be facing up.

3.1.4.4 Vibration Dampers

Vibration damper shall be provided in the suction and discharge lines on spring mounted compressors. Vibration dampers shall be installed parallel with the shaft of the compressor and shall be anchored firmly at the upstream end on the suction line and the downstream end in the discharge line.

3.1.4.5 Strainers

Strainers shall be provided immediately ahead of all solenoid valves and expansion devices. Strainers may be an integral part of the expansion valve.

3.1.4.6 Filter Dryer

A liquid line filter dryer shall be provided on each refrigerant circuit located such that all liquid refrigerant passes through a filter dryer. The filter dryer shall be sized in accordance with the manufacturer's

recommendations for the system in which it is installed. The filter dryer shall be installed such that the filter dryer can be isolated from the system, the isolated portion of the system evacuated, and the filter dryer replaced. Filter dryers shall be installed in the horizontal position except replaceable core filter dryers may be installed in the vertical position with the access flange on the bottom.

3.1.4.7 Sight Glass

A moisture indicating sight glass shall be installed in all refrigerant circuits down stream of all filter dryers.

3.1.4.8 Discharge Line Oil Separator

Discharge line oil separator shall be provided in the discharge line from each compressor. Oil return line shall be connected to the compressor as recommended by the compressor manufacturer.

3.1.5 Field Applied Insulation

Field applied insulation other than that specified for water boxes and headers shall be as specified in Section 15250 THERMAL INSULATION FOR MECHANICAL SYSTEMS.

3.1.6 Factory Applied Insulation

3.1.6.1 Refrigerant Suction Lines

Refrigerant suction lines between the cooler and each compressor and cold gas inlet connections to gas cooled motors shall be insulated with not less than 19 mm (3/4 inch) thick unicellular plastic foam.

3.1.6.2 Liquid Coolers

Liquid coolers (including chilled water headers or boxes), which may have factory or field applied insulation, shall be insulated with unicellular plastic foam. Insulation shall be not less than 19 mm (3/4 inch) thick or have a maximum thermal conductivity of 1.59 W/((sq. m)(degree K) (0.28 Btu/((hr.)(sq. ft.)(degree F.))). In lieu of the above insulation, a 50 mm thickness of urethane foam may be used. Urethane foam shall be completely covered and sealed with a sheet metal jacket not lighter than 1.0 mm (20 gauge). Insulation on heads of coolers shall be constructed to provide easy removal and replacement of heads without damage to the insulation.

3.2 TESTS

3.2.1 Field Tests

Tests shall be conducted in the presence of the Contracting Officer. Water and electricity required for the tests will be furnished by the Government. Any material, equipment, instruments, and personnel required for the test shall be provided by the Contractor. The services of a qualified technician shall be provided as required to perform all tests and procedures indicated herein. Field tests shall be coordinated with Section 15990 TESTING, ADJUSTING, AND BALANCING OF HVAC SYSTEMS.

3.2.1.1 Water Pipe Testing

After cleaning, water piping shall be hydrostatically tested at a pressure equal to 150 percent of the total system operating pressure for period of time sufficient to inspect every joint in the system and in no case less than 2 hours. Leaks shall be repaired and piping retested until test is successful. No loss of pressure shall be allowed. Leaks shall be repaired by rewelding or replacing pipe or fittings. Caulking of joints will not be permitted. Concealed and insulated piping shall be tested in place before concealing.

3.2.1.2 Refrigerant Pipe Testing

a. Refrigerant Leakage Test: After all components of the refrigerant system have been installed and the piping connected, the system shall be subjected to a refrigerant leakage test. The refrigerant leakage test shall be done with dry nitrogen before any refrigerant pipe is insulated or covered. High and low side of the refrigerant system shall be tested for the minimum refrigerant leakage test pressure specified in ASHRAE 15, for the refrigerant employed in the system. System shall be proved tight and free of leaks by allowing the refrigerant leakage test pressure to remain on the system for 24 hours with no drop in pressure. The initial test pressure and surrounding air temperature will be recorded. After the 24 hour hold period, the final system pressure and surrounding air temperature will be recorded. A correction of 3.7 kPa shall be allowed for each degree C change in the initial and final temperature of the surrounding air, plus for an increase and minus for a decrease. The system shall have passed the refrigerant leakage test if the corrected final system pressure is equal to the initial system test pressure. If the pressures are not equal, the leaks shall be located and repaired.

b. Refrigerant Leaks: To repair leaks, the joint shall be taken apart, thoroughly cleaned, and remade as a new joint. Joints repaired by caulking or remelting and adding more brazing material will not be acceptable. After leak repairs have been made, the refrigerant leakage test shall be conducted again.

c. Evacuation Test: After the foregoing tests have been satisfactorily completed and the pressure relieved, entire system shall be evacuated to an absolute pressure of 300 microns. During evacuation of the system, the ambient temperature shall be higher than 2 degrees C. Vacuum line shall be closed, and the system shall stand for 1 hour. After this period, the absolute pressure shall not exceed 500 microns. If the pressure rises over 500 microns, the system shall continue to be evacuated until the system reaches 300 microns and can stand for 1 hour with the vacuum line closed without the absolute pressure rising over 500 microns. During evacuation, pressures shall be recorded by a thermocouple type, electronic type, or a calibrated-micron type gauge.

3.2.2 System Performance Tests

After the foregoing tests have been completed and before each refrigeration system is accepted, tests to demonstrate the general operating characteristics of all equipment shall be conducted by a registered professional engineer or an approved manufacturer's startup representative experienced in system startup and testing, at such times as directed. Tests shall cover a period of not less than 2 days for each system and

shall demonstrate that the entire system is functioning in accordance with the drawings and specifications. Corrections and adjustments shall be made as necessary and tests shall be re-conducted to demonstrate that the entire system is functioning as specified.

3.3 MANUFACTURER'S FIELD SERVICE

The services of a factory-trained representative shall be provided for 2 days. The representative shall advise on the following:

a. Hermetic machines:

(1) Testing hermetic water-chilling unit under pressure for refrigerant leaks; evacuation and dehydration of machine to an absolute pressure of not over 300 microns.

(2) Charging the machine with refrigerant.

(3) Starting the machine.

b. Open Machines:

(1) Erection, alignment, testing, and dehydrating.

(2) Charging the machine with refrigerant.

(3) Starting the machine.

3.4 CLEANING AND ADJUSTING

3.4.1 Piping

Pipes shall be cleaned free of scale and thoroughly flushed of all foreign matter. A temporary bypass shall be provided for all water coils to prevent flushing water from passing through coils. Strainers and valves shall be thoroughly cleaned. Prior to testing and balancing, air shall be removed from all water systems by operating the air vents. Temporary measures, such as piping the overflow from vents to a collecting vessel shall be taken to avoid water damage during the venting process. Air vents shall be plugged or capped after the system has been vented.

3.4.2 Equipment

Equipment shall be wiped clean, with all traces of oil, dust, dirt, or paint spots removed. Temporary filters shall be provided for all fans that are operated during construction, and new filters shall be installed after all construction dirt has been removed from the building. System shall be maintained in this clean condition until final acceptance. Bearings shall be properly lubricated with oil or grease as recommended by the manufacturer. Belts shall be tightened to proper tension. Control valves and other miscellaneous equipment requiring adjustment shall be adjusted to setting indicated or directed. Fans shall be adjusted to the speed indicated by the manufacturer to meet specified conditions.

3.5 DEMONSTRATIONS

Contractor shall conduct a training course for the operating staff as designated by the Contracting Officer. The training period shall consist of a total 8 hours of normal working time and start after the system is

functionally completed but prior to final acceptance tests. The field instructions shall cover all of the items contained in the Operation and Maintenance Manuals as well as demonstrations of routine maintenance operations.

-- End of Section --

SECTION 15653

AIR-CONDITIONING SYSTEM (UNITARY TYPE)

PART 1 GENERAL

1.1 REFERENCES

The publications listed below form a part of this specification to the extent referenced. The publications are referred to in the text by basic designation only.

AIR CONDITIONING AND REFRIGERATION INSTITUTE (ARI)

ARI 210/240	(1994) Unitary Air-Conditioning and Air-Source Heat Pump Equipment
ARI ANSI/ARI 410	(1991) Forced-Circulation Air-Cooling and Air-Heating Coils
ARI 460	(1994) Remote Mechanical-Draft Air-Cooled Refrigerant Condensers
ARI 495	(1993) Refrigerant Liquid Receivers
ARI 700	(1995) Specifications for Fluorocarbon and Other Refrigerants
ARI ANSI/ARI 710	(1986) Liquid-Line Driers
ARI ANSI/ARI 720	(1988) Refrigerant Access Valves and Hose Connectors
ARI 750	(1994) Thermostatic Refrigerant Expansion Valves
ARI 760	(1994) Solenoid Valves for Use with Volatile Refrigerants

AIR DIFFUSION COUNCIL (ADC)

ADC 1062:GRD	(1984) Test Codes for Grilles, Registers and Diffusers

AMERICAN NATIONAL STANDARDS INSTITUTE (ANSI)

ANSI A13.1	(1981; R 1993) Scheme for the Identification of Piping Systems

AMERICAN SOCIETY FOR TESTING AND MATERIALS (ASTM)

ASTM A 53	(1996) Pipe, Steel, Black and Hot-Dipped, Zinc-Coated, Welded and Seamless
ASTM A 307	(1994) Carbon Steel Bolts and Studs, 60

	000 PSI Tensile Strength
ASTM A 334/A 334M	(1996) Seamless and Welded Carbon and Alloy-Steel Tubes for Low-Temperature Service
ASTM A 653/A 653M	(1996) Steel Sheet, Zinc-Coated (Galvanized) or Zinc-Iron Alloy-Coated (Galvannealed) by the Hot-Dip Process
ASTM B 117	(1995) Operating Salt Spray (Fog) Apparatus
ASTM B 280	(1995a) Seamless Copper Tube for Air Conditioning and Refrigeration Field Service
ASTM C 534	(1994) Preformed Flexible Elastomeric Cellular Thermal Insulation in Sheet and Tubular Form
ASTM C 916	(1985; R 1996) Adhesives for Duct Thermal Insulation
ASTM C 1071	(1991) Thermal and Acoustical Insulation (Glass Fiber, Duct Lining Material)
ASTM D 520	(1984; R 1995) Zinc Dust Pigment
ASTM D 3308	(1991a) PTFE Resin Skived Tape
ASTM E 84	(1996a) Surface Burning Characteristics of Building Materials
ASTM E 437	(1992) Industrial Wire Cloth and Screens (Square Opening Series)
ASTM F 104	(1993) Nonmetallic Gasket Materials

AMERICAN SOCIETY OF HEATING, REFRIGERATING AND AIR-CONDITIONING ENGINEERS (ASHRAE)

ASHRAE 15	(1994) Safety Code for Mechanical Refrigeration
ASHRAE 34	(1992; Addenda a-j) Number Designation and Safety Classification of Refrigerants
ASHRAE 52.1	(1992) Gravimetric and Dust-Spot Procedures for Testing Air-Cleaning Devices Used in General Ventilation for Removing Particulate Matter

AMERICAN SOCIETY OF MECHANICAL ENGINEERS (ASME)

ASME B1.20.1	(1983; R 1992) Pipe Threads, General Purpose (Inch)
ASME B31.1	(1995; B31.1a; B31.1b) Power Piping

ASME B31.5	(1992; B31.5a) Refrigeration Piping
ASME B40.1	(1991) Gauges - Pressure Indicating Dial Type - Elastic Element
ASME BPV VIII Div 1	(1995; Addenda Dec 1995, Dec 1996) Boiler and Pressure Vessel Code; Section VIII, Pressure Vessels Division 1 - Basic Coverage
ASME BPV IX	(1995; Addenda Dec 1995, Dec 1996) Boiler and Pressure Vessel Code; Section IX, Welding and Brazing Qualifications

AMERICAN WELDING SOCIETY (AWS)

AWS-01	(1991) Brazing Handbook
AWS A5.8	(1992) Filler Metals for Brazing and Braze Welding
AWS D1.1	(1996) Structural Welding Code - Steel

MANUFACTURERS STANDARDIZATION SOCIETY OF THE VALVE AND FITTINGS INDUSTRY (MSS)

MSS SP-58	(1993) Pipe Hangers and Supports - Materials, Design and Manufacture
MSS SP-69	(1996) Pipe Hangers and Supports - Selection and Application

NATIONAL ELECTRICAL MANUFACTURERS ASSOCIATION (NEMA)

NEMA ICS 6	(1993) Industrial Control and Systems, Enclosures
NEMA MG 1	(1993; Rev 1; Rev 2; Rev 3) Motors and Generators
NEMA MG 2	(1989) Safety Standard for Construction and Guide for Selection, Installation, and Use of Electric Motors and Generators

NATIONAL FIRE PROTECTION ASSOCIATION (NFPA)

NFPA 70	(1996; Errata) National Electrical Code
NFPA 90A	(1996; Errata) Installation of Air Conditioning and Ventilating Systems

NORTH AMERICAN INSULATION MANUFACTURERS ASSOCIATION (NAIMA)

NAIMA AH115	(1993) Fibrous Glass Duct Construction Standards

SHEET METAL AND AIR CONDITIONING CONTRACTORS NATIONAL ASSOCIATION (SMACNA)

SMACNA-06	(1995) HVAC Duct Construction Standards - Metal and Flexible
SMACNA-10	(1985) HVAC Air Duct Leakage Test Manual

UNDERWRITERS LABORATORIES (UL)

UL Blgmat Dir	(1997) Building Materials Directory
UL Elecconst Dir	(1997) Electrical Construction Equipment Directory
UL 181	(1996; Rev Oct 1996) Factory-Made Air Ducts and Air Connectors
UL 207	(1993; Rev thru Mar 1995) Refrigerant-Containing Components and Accessories, Nonelectrical
UL 214	(1993) Tests for Flame-Propagation of Fabrics and Films
UL 586	(1996) High-Efficiency, Particulate, Air Filter Units
UL 723	(1996) Test for Surface Burning Characteristics of Building Materials
UL 900	(1994) Test Performance of Air Filter Units
UL 1995	(1995) Heating and Cooling Equipment

1.2 SUBMITTALS

Government approval is required for submittals with a "GA" designation; submittals having an "FIO" designation are for information only. The following shall be submitted in accordance with Section 01330 SUBMITTAL PROCEDURES:

SD-01 Data

Air-Conditioning; GA|ED.

Manufacturer's standard catalog data, prior to the purchase or installation of a particular component, shall be highlighted to show brand name, model number, size, options, performance charts and curves, etc. in sufficient detail to demonstrate compliance with contract requirements. Data shall be submitted for each specified component. Data shall include manufacturer's recommended installation instructions and procedures. If vibration isolation is specified for a unit, vibration isolator literature shall be included containing catalog cuts and certification that the isolation characteristics of the isolators provided meet the manufacturer's recommendations.

Spare Parts Data; FIO;AR.

Spare parts data for each different item of equipment specified, after approval of detail drawings and not later than 2 months prior to the date of beneficial occupancy. The data shall include a complete list of parts

and supplies, with current unit prices and source of supply, a recommended spare parts list for 1 year of operation, and a list of the parts recommended by the manufacturer to be replaced on a routine basis.

SD-04 Drawings

Air-Conditioning; GA|ED.

Drawings shall provide adequate detail to demonstrate compliance with contract requirements. Drawings shall consist of:

(1) Equipment layouts which identify assembly and installation details.

(2) Piping layouts which identify valves and fittings.

(3) Plans and elevations which identify clearances required for maintenance and operation.

(4) Wiring diagrams which identify each component individually and interconnected or interlocked relationships between components.

(5) Foundation drawings, bolt-setting information, and foundation bolts prior to concrete foundation construction for equipment indicated or required to have concrete foundations.

(6) Details, if piping and equipment are to be supported other than as indicated, which include loadings and type of frames, brackets, stanchions, or other supports.

(7) Automatic temperature control diagrams and control sequences.

(8) Installation details which includes the amount of factory set superheat and corresponding refrigerant pressure/temperature.

SD-06 Instructions

Framed Instructions; FIO;AR.

Framed instructions for posting, at least 2 weeks prior to construction completion.

SD-07 Schedules

Tests; FIO; AR.

A letter, at least 10 working days in advance of each tests, advising the Contracting Officer of the test. Individual letters shall be submitted for the condenser water system, refrigerant system, ductwork leak tests, cooling tower tests, condenser water quality tests, and the system performance tests. Each letter shall identify the date, time, and location for each test.

Demonstrations; GA|ED.

A letter, at least 14 working days prior to the date of the proposed training course, which identifies the date, time, and location for the training.

SD-08 Statements

Qualifications; FIO;AR.

A letter listing the qualifying procedures for each welder. The letter shall include supporting data such as test procedures used, what was tested etc., and a list of the names of qualified welders and their identification symbols.

Verification of Dimensions; FIO;AR.

A letter, at least 2 weeks prior to beginning construction, including the date the site was visited, conformation of existing conditions, and any discrepancies found.

SD-09 Reports

Tests; GA|ED.

Six copies of each test containing the information described below in bound 216 x 279 mm booklets. Individual reports shall be submitted for the condenser water system, refrigerant system, ductwork leak tests, and the cooling tower tests.

(1) The date the tests were performed.

(2) A list of equipment used, with calibration certifications.

(3) Initial test summaries.

(4) Repairs/adjustments performed.

(5) Final test results.

System Performance Tests; GA|ED.

Six copies of the report shall be provided in bound 216 x 279 mm (8-1/2 x 11 inch) booklets. The report shall document compliance with the specified performance criteria upon completion and testing of the system. The report shall indicate the number of days covered by the tests and any conclusions as to the adequacy of the system. The report shall also include the following information and shall be taken at least three different times at outside dry-bulb temperatures that are at least 3 degrees C apart:

(1) Date and outside weather conditions.

(2) The load on the system based on the following:

(a) The refrigerant used in the system.
(b) Condensing temperature and pressure.
(c) Suction temperature and pressure.
(d) Ambient, condensing and coolant temperatures
(e) Running current, voltage and proper phase sequence for each phase of all motors.

(3) The actual on-site setting of operating and safety controls.

(4) Thermostatic expansion valve superheat - value as determined

by field test

(5) Subcooling

(6) High and low refrigerant temperature switch set-points

(7) Low oil pressure switch set-point

(8) Defrost system timer and thermostat set-points

(9) Moisture content

(10) Capacity control set-points

(11) Field data and adjustments which affect unit performance and energy consumption.

(12) Field adjustments and settings which were not permanently marked as an integral part of a device.

SD-13 Certificates

Air-Conditioning; FIO;AR.

Where the system, components, or equipment are specified to comply with requirements of ARI, ASHRAE, ASME, or UL, proof of such compliance shall be provided. The label or listing of the specified agency shall be acceptable evidence. In lieu of the label or listing, a written certificate from an approved, nationally recognized testing organization equipped to perform such services, stating that the items have been tested and conform to the requirements and testing methods of the specified agency may be submitted. When performance requirements of this project's drawings and specifications vary from standard ARI rating conditions, computer printouts, catalog, or other application data certified by ARI or a nationally recognized laboratory as described above shall be included. If ARI does not have a current certification program that encompasses such application data, the manufacturer may self certify that his application data complies with project performance requirements in accordance with the specified test standards.

Service Organizations; FIO;AR.

A certified list of qualified permanent service organizations for support of the equipment which includes their addresses and qualifications. The service organizations shall be reasonably convenient to the equipment installation and be able to render satisfactory service to the equipment on a regular and emergency basis during the warranty period of the contract.

SD-19 Operation and Maintenance Manuals

Operation Manual; FIO;AR.

Six complete copies of an operation manual in bound 216 x 279 mm (8-1/2 x 11 inch) booklets listing step-by-step procedures required for system startup, operation, and shutdown. The booklets shall include the manufacturer's name, model number, and parts list. The manuals shall include the manufacturer's name, model number, service manual, and a brief description of all equipment and their basic operating features.

Maintenance Manual; FIO;AR.

Six complete copies of maintenance manual in bound 216 x 279 mm (8-1/2 x 11 inch) booklets listing routine maintenance procedures, possible breakdowns and repairs, and a trouble shooting guide. The manuals shall include piping and equipment layouts and simplified wiring and control diagrams of the system as installed.

1.3 QUALIFICATIONS

Piping shall be welded in accordance with the qualified procedures using performance qualified welders and welding operators. Procedures and welders shall be qualified in accordance with ASME BPV IX. Welding procedures qualified by others, and welders and welding operators qualified by another employer may be accepted as permitted by ASME B31.1. The Contracting Officer shall be notified 24 hours in advance of tests and the tests shall be performed at the work site if practical. The welder or welding operator shall apply his assigned symbol near each weld he makes as a permanent record. Structural members shall be welded in accordance with Section 05055 WELDING, STRUCTURAL.

1.4 DELIVERY, STORAGE, AND HANDLING

Stored items shall be protected from the weather and contamination. Proper protection and care of all material before, during, and after installation shall be the Contractor's responsibility. Any materials found to be damaged shall be replaced at the Contractor's expense. During installation, piping and similar openings shall be capped to keep out dirt and other foreign matter.

1.5 PROJECT/SITE CONDITIONS

1.5.1 Verification of Dimensions

The Contractor shall become familiar with all details of the work, verify dimensions in the field, and advise the Contracting Officer of any discrepancy before performing any work.

1.5.2 Drawings

Because of the small scale of the drawings, it is not possible to indicate all offsets, fittings, and accessories that may be required. The Contractor shall carefully investigate the plumbing, fire protection, electrical, structural and finish conditions that would affect the work to be performed and arrange such work accordingly, furnishing required offsets, fittings, and accessories to meet such conditions. Equipment, ductwork, and piping arrangements shall fit into space allotted and allow adequate acceptable clearances for installation, replacement, entry, servicing, and maintenance.

PART 2 PRODUCTS

2.1 STANDARD PRODUCTS

Materials and equipment shall be standard products of a manufacturer regularly engaged in the manufacturing of such products, which are of a similar material, design and workmanship. The standard products shall have been in satisfactory commercial or industrial use for 2 years prior to bid opening. The 2 year use shall include applications of equipment and

materials under similar circumstances and of similar size. The 2 years experience shall be satisfactorily completed by a product which has been sold or is offered for sale on the commercial market through advertisements, manufacturer's catalogs, or brochures. Products having less than a 2 year field service record shall be acceptable if a certified record of satisfactory field operation, for not less than 6000 hours exclusive of the manufacturer's factory tests, can be shown. Products shall be supported by a service organization. System components shall be environmentally suitable for the indicated locations.

2.2 NAMEPLATES

Major equipment including compressors, condensers, receivers, heat exchanges, fans and motors shall have the manufacturer's name, address, type or style, model or serial number, and catalog number on a plate secured to the item of equipment. Plates shall be durable and legible throughout equipment life and made of anodized aluminum. Plates shall be fixed in prominent locations with nonferrous screws or bolts.

2.3 ELECTRICAL WORK

Electrical equipment, motors, motor efficiencies, and wiring shall be in accordance with Section 16415 ELECTRICAL WORK, INTERIOR. Electrical motor driven equipment specified shall be provided complete with motors, motor starters, and controls. Electrical characteristics shall be as shown, and unless otherwise indicated, all motors of 746 kW (1 hp) and above with open, dripproof, totally enclosed, or explosion proof fan cooled enclosures, shall be high efficiency type. Field wiring shall be in accordance with manufacturer's instructions. Each motor shall conform to NEMA MG 1 and NEMA MG 2 and be of sufficient size to drive the equipment at the specified capacity without exceeding the nameplate rating of the motor. Motors shall be continuous duty with the enclosure specified. Motor starters shall be provided complete with thermal overload protection and other appurtenances necessary for the motor control indicated. Motors shall be furnished with a magnetic across-the-line or reduced voltage type starter as required by the manufacturer. Motor duty requirements shall allow for maximum frequency start-stop operation and minimum encountered interval between start and stop. Motors shall be sized for the applicable loads. Motor torque shall be capable of accelerating the connected load within 20 seconds with 80 percent of the rated voltage maintained at motor terminals during one starting period. Motor bearings shall be fitted with grease supply fittings and grease relief to outside of enclosure. Manual or automatic control and protective or signal devices required for the operation specified and any control wiring required for controls and devices specified, but not shown, shall be provided.

2.4 MISCELLANEOUS MATERIALS

2.4.1 Gaskets

Gaskets shall conform to ASTM F 104 - classification for compressed sheet with nitrile binder and acrylic fibers for maximum 370 degrees C (700 degrees F) service.

2.4.2 Bolts and Nuts

Bolts and nuts, except as required for piping applications, shall be in accordance with ASTM A 307. The bolt head shall be marked to identify the manufacturer and the standard with which the bolt complies in accordance

with ASTM A 307.

2.4.3 Pipe Hangers, Inserts, and Supports

Pipe hangers, inserts, and supports shall conform to MSS SP-58 and MSS SP-69.

2.4.4 Escutcheons

Escutcheons shall be chromium-plated iron or chromium-plated brass, either one piece or split pattern, held in place by internal spring tension or set screws.

2.4.5 Pressure and Vacuum Gauge

Gauge shall conform to ASME B40.1, Class 1, 2, or 3, Style X, Type I or III as required, 115 mm (4-1/2 inches) in diameter with phenolic or metal case. Each gauge range shall be selected so that at normal operating pressure, the needle is within the middle-third of the range.

2.4.6 Temperature Gauges

Industrial duty thermometers shall be provided for the required temperature range. Thermometers shall have Celsius scale in 1 degree graduations scale on a white face. The pointer shall be adjustable.

2.4.6.1 Stem Cased-Glass

Stem cased-glass case shall be polished stainless steel or cast aluminum, 229 mm (9 inches) long, with clear acrylic lens, and non-mercury filled glass tube.

2.4.6.2 Bimetallic Dial

Bimetallic dial type case shall be not less than 89 mm (3-1/2 inches), stainless steel, and shall be hermetically sealed with clear acrylic lens. Bimetallic element shall be silicone dampened and unit fitted with external calibrator adjustment. Accuracy shall be one percent of dial range.

2.4.6.3 Liquid-, Solid-, and Vapor-Filled Dial

Liquid-, solid-, and vapor-filled dial type cases shall be not less than 89 mm (3-1/2 inches), stainless steel or cast aluminum with clear acrylic lens. Fill shall be nonmercury, suitable for encountered cross-ambients, and connecting capillary tubing shall be double-braided bronze.

2.4.6.4 Thermal Well

Thermal well shall be identical size, 15 or 20 mm (1/2 or 3/4 inch) NPT connection, brass or stainless steel. Where test wells are indicated, provide captive plug-fitted type 15 mm (1/2 inch) NPT connection suitable for use with either engraved stem or standard separable socket thermometer or thermostat. Extended neck thermal wells shall be of sufficient length to clear insulation thickness by 25 mm.

2.4.7 Unicellular Plastic Foam

Unicellular plastic foam shall be in accordance with ASTM C 534, Form T, except that D-Factor shall not exceed 0.28 at 24 degrees C (75 degrees F) mean temperature.

2.4.8 Bird Screen

Screen shall be in accordance with ASTM E 437, Type 1, Class 1, 2 by 2 mesh, 1.6 mm (0.063 inch) diameter aluminum wire or 0.79 mm (0.031 inch) diameter stainless steel wire.

2.5 UNITARY EQUIPMENT, SPLIT SYSTEM

Unit shall be an air-cooled, split system which employs a remote condensing unit, a separate indoor unit, and interconnecting refrigerant piping. Unit shall be the air-conditioning type conforming to applicable Underwriters Laboratories (UL) standards including UL 1995. Unit shall be rated in accordance with ARI 210/240. Unit shall be provided with necessary fans, air filters, internal dampers, mixing boxes, supplemental heat, and cabinet construction as specified in paragraph "System Components". The remote unit shall be as specified in paragraph REMOTE CONDENSER OR CONDENSING UNIT. Evaporator or supply fans shall be double-width, double inlet, forward curved, backward inclined, or airfoil blade, centrifugal scroll type. Condenser or outdoor fans shall be the manufacturer's standard for the unit specified and may be either propeller or centrifugal scroll type. Fan and condenser motors shall have totally enclosed enclosures.

2.5.1 Air-to-Refrigerant Coil

Coils shall have nonferrous tubes of 10 mm (3/8 inch) minimum diameter with copper or aluminum fins that are mechanically bonded or soldered to the tubes. Casing shall be galvanized steel or aluminum. Contact of dissimilar metals shall be avoided. Coils shall be tested in accordance with ASHRAE 15 at the factory and be suitable for the working pressure of the installed system. Each coil shall be dehydrated and sealed after testing and prior to evaluation and charging. Each unit shall be provided with a factory operating charge of refrigerant and oil or a holding charge. Unit shipped with a holding charge shall be field charged. Separate expansion devices shall be provided for each compressor circuit.

2.5.2 Refrigeration Circuit

Refrigerant-containing components shall comply with ASHRAE 15 and be factory tested, cleaned, dehydrated, charged, and sealed. Refrigerant charging valves and connections, and pumpdown valves shall be provided for each circuit. Filter-drier shall be provided in each liquid line and be reversible-flow type. Refrigerant flow control devices shall be an adjustable superheat thermostatic expansion valve with external equalizer matched to coil, capillary or thermostatic control, and a pilot solenoid controlled, leak-tight, four-way refrigerant flow reversing valve.

2.5.3 Unit Controls

Unit shall be internally prewired with a 120 volt control circuit powered by an internal transformer. Terminal blocks shall be provided for power wiring and external control wiring. Unit shall have cutoffs for high pressure, low oil pressure for compressors with positive displacement oil pumps, supply fan failure. Head pressure controls shall sustain unit operation with ambient temperature of -17.8 degrees C (0 degrees F). Adjustable-cycle timers shall prevent short-cycling. Multiple compressors shall be staged by means of a time delay. Unit shall be internally protected by fuses or a circuit breaker in accordance with UL 1995.

2.6 AIR-CONDITIONERS FOR ELECTRONIC DATA PROCESSING (EDP) SPACES

2.6.1 Computer Room Air Conditioning Units

Computer Room Air Conditioning (CRAC) Units and Matching Condenser Units are to be Government Furnished Contractor Installed (GFCI). Contractor to test all equipment 90 days prior to installation. Any problems with the normal operation of this type of equipment shall be reported to the Contracting Officer.

2.6.2 Refrigerant Piping

The Contractor shall provide all refrigerant piping (dual circuit) from the condenser units to the CRAC units. In addition, water lines for the humidifier and condensate drain lines shall be provided. The refrigerantpiping is to be sized per the recommendation of the computer room air conditioner manufacturer.

2.6.3 Existing Units

The existing units ar Lieber Model FH/UH 245A with condenser unit C-308L (nonimal dual circuit 20 ton units). Contractor to verify size of units and report any discrepancies to the Contracting Officer.

2.6.4 Sequential Load Actuation

Contractor to add to control system means for sequential load actuation by providing time delay controller, adjustable between 0 - 8 minutes (set a 2 minutes), to allow for a time delay when the emergency generator (refer to electrical plans and specifications) comes on line such that the Computer Room Air Conditioners (CRAC) 1, 2, 3 and 4 will not come on at the same time but at 2 minute (adjustable) intervals.

2.7 EQUIPMENT EFFICIENCY

Unit shall have an efficiency of 8.9.

2.8 REMOTE CONDENSING UNIT

Each remote condenser coil shall be fitted with a manual isolation valve and an access valve on the coil side. Saturated refrigerant condensing temperature shall not exceed 49 degrees C (120 degrees F) at 40 degrees C (95 degrees F) ambient. Unit shall be provided with low ambient condenser controls to ensure proper operation in an ambient temperature of -17.8 degrees C (0 degrees F). Fan and cabinet construction shall be provided as specified in paragraph "System Components". Fan and condenser motors shall have totally enclosed enclosures.

2.8.1 Air-Cooled Condenser

Unit shall be rated in accordance with ARI 460 and conform to the requirements of UL 1995. Unit shall be factory fabricated, tested, packaged, and self-contained. Unit shall be complete with casing, propeller or centrifugal type fans, heat rejection coils, connecting piping and wiring, and all necessary appurtenances.

2.8.1.1 Connections

Interconnecting refrigeration piping, electrical power, and control wiring

between the condensing unit and the indoor unit shall be provided as required and as indicated. Electrical and refrigeration piping terminal connections between condensing unit and evaporator units shall be provided.

2.8.1.2 Head Pressure Control and Liquid Subcooling

Low ambient control for multi-circuited units serving more than one evaporator coil shall provide independent condenser pressure controls for each refrigerant circuit. Controls shall be set to produce a minimum of 95 degrees F saturated refrigerant condensing temperature. Unit shall be provided with a liquid subcooling circuit which shall ensure proper liquid refrigerant flow to the expansion device over the specified application range of the condenser. Unit shall be provide with manufacturer's standard liquid subcooling. Subcooling circuit shall be liquid sealed.

2.8.1.3 Condensing Coil

Coils shall have nonferrous tubes of 10 mm (3/8 inch) minimum diameter with copper or aluminum fins that are mechanically bonded or soldered to the tubes. Casing shall be galvanized steel or aluminum. Contact of dissimilar metals shall be avoided. Coils shall be tested in accordance with ASHRAE 15 at the factory and be suitable for the working pressure of the installed system. Each coil shall be dehydrated and sealed after testing and prior to evaluation and charging. Each unit shall be provided with a factory operating charge of refrigerant and oil or a holding charge. Unit shipped with a holding charge shall be field charged. Separate expansion devices shall be provided for each compressor circuit.

2.8.1.4 Unit Controls

The control system shall be complete with required accessories for regulating condenser pressure by fan cycling, solid-state variable fan speed, modulating condenser coil or fan dampers, flooding the condenser, or a combination of the above. Unit mounted control panels or enclosures shall be constructed in accordance with applicable requirements of NFPA 70 and housed in NEMA ICS 6, Class 1 or 3A enclosures. Controls shall include control transformer, fan motor starters, solid-state speed control, time delay start-up, overload protective devices, interface with local and remote components, and intercomponent wiring to terminal block points.

2.8.2 Compressor

Compressor shall be direct drive, semi-hermetic or hermetic reciprocating, or scroll type capable of operating at partial load conditions. Compressor shall be capable of continuous operation down to the lowest step of unloading as specified. Units 35 kW (120,000 Btuh) and larger shall be provided with capacity reduction devices to produce automatic capacity reduction of at least 50 percent. If standard with the manufacturer, two or more compressors may be used in lieu of a single compressor with unloading capabilities, in which case the compressors will operate in sequence, and each compressor shall have an independent refrigeration circuit through the condenser and evaporator. Each compressor shall start in the unloaded position. Each compressor shall be provided with vibration isolators, crankcase heater, lubrication pump, thermal overloads, and high and low pressure safety cutoffs and protection against short cycling.

2.9 SYSTEM COMPONENTS

2.9.1 Refrigerant and Oil

Refrigerant shall be one of the fluorocarbon gases. Refrigerants shall have number designations and safety classifications in accordance with ASHRAE 34. Refrigerants shall meet the requirements of ARI 700 as a minimum. Refrigerants shall have an Ozone Depletion Potential (ODP) of less than or equal to 0.05. Contractor shall provide and install a complete charge of refrigerant for the installed system as recommended by the manufacturer. Except for factory sealed units, two complete charges of lubricating oil for each compressor crankcase shall be furnished. One charge shall be used during the system performance testing period. Following the satisfactory completion of the performance testing, the oil shall be drained and replaced with a second charge. Lubricating oil shall be of a type and grade recommended by the manufacturer for each compressor. Where color leak indicator dye is incorporated, charge shall be in accordance with manufacturer's recommendation.

2.9.2 Fans

Fan wheel shafts shall be supported by either maintenance-accessible lubricated antifriction block-type bearings, or permanently lubricated ball bearings. Unit fans shall be selected to produce the cfm required at the fan total pressure. Motor starters, if applicable, shall be magnetic across-the-line type with a dripproof enclosure. Thermal overload protection shall be of the manual or automatic-reset type. Fan wheels or propellers shall be constructed of aluminum or galvanized steel. Centrifugal fan wheel housings shall be of galvanized steel, and both centrifugal and propeller fan casings shall be constructed of aluminum or galvanized steel. Steel elements of fans, except fan shafts, shall be hot-dipped galvanized after fabrication or fabricated of mill galvanized steel. Mill-galvanized steel surfaces and edges damaged or cut during fabrication by forming, punching, drilling, welding, or cutting shall be recoated with an approved zinc-rich compound. Fan wheels or propellers shall be statically and dynamically balanced. Direct-drive fan motors shall be of the multiple-speed variety. Belt-driven fans shall have adjustable sheaves to provide not less than 10 percent fan-speed adjustment. The sheave size shall be selected so that the fan speed at the approximate midpoint of the sheave adjustment will produce the specified air quantity. Centrifugal scroll-type fans shall be provided with streamlined orifice inlet and V-belt drive. Each drive will be independent of any other drive. Propeller fans shall be direct-drive or V-belt drive type with adjustable or fixed pitch blades. V-belt driven fans shall be mounted on a corrosion protected drive shaft supported by either maintenance-accessible lubricated antifriction block-type bearings, or permanently lubricated ball bearings. Each drive will be independent of any other drive. Drive bearings shall be protected with water slingers or shields. V-belt drives shall be fitted with guards where exposed to contact by personnel and fixed pitch or adjustable pitch sheaves.

2.9.3 Primary/Supplemental Heating

2.9.3.1 Water Coil

Coil shall conform to the provisions of ARI ANSI/ARI 410. Coil shall be fin-and-tube type constructed of seamless copper tubes and aluminum or copper fins mechanically bonded or soldered to tubes. Headers shall be constructed of cast iron, welded steel or copper. Coil shall be constructed to float within the casing to allow free expansion and contraction of tubing. Casing and tube support sheets shall not be lighter than 1.6 mm (16 gauge) galvanized steel formed to provide structural

strength. When required, multiple tube supports shall be provided to prevent tube sag. Coil shall be circuited for suitable water velocity without excessive pressure drop and properly pitched for drainage where required or indicated. Each coil shall be tested at the factory under water at not less than 2000 kPa (300 psi) air pressure, tested hydrostatically after assembly of the unit and proved tight under a gauge pressure of 1400 kPa (200 psi). Coil shall be suitable for use with water up to 120 degrees C. Coil shall allow complete coil drainage with a pitch of not less than 10 mm per meter slope to drain.

2.9.4 Air Filters

Air filters shall be listed in accordance with requirements of UL 900, except high efficiency particulate air filters of 99.97 percent efficiency by the DOP Test Method shall be as listed under the label service and shall meet the requirements of UL 586.

2.9.4.1 Replaceable Media Filters

Replaceable media filters shall be the dry-media type, of the size required to suit the application. Filtering media shall be not less than 25 mm (1 inch) thick fibrous glass media pad supported by a structural wire grid or woven wire mesh. Pad shall be enclosed in a holding frame of not less than 1.6 mm (16 gauge) galvanized steel, and equipped with quick-opening mechanism for changing filter media. The air flow capacity of the filter shall be based on net filter face velocity not exceeding 1.52 m/s (300 feet per minute), with initial resistance of 32 Pa (0.13 inches water gauge). Average efficiency shall be not less than 20 percent when tested in accordance with ASHRAE 52.1.

2.9.5 Pressure Vessels

Pressure vessels shall conform to ASME BPV VIII Div 1 or UL 207, as applicable for maximum and minimum pressure or temperature encountered. Where referenced publications do not apply, pressure components shall be tested at 1-1/2 times design working pressure. Refrigerant wetted carbon steel surfaces shall be pickled or abrasive blasted free of mill scale, cleaned, dried, charged, and sealed.

2.9.5.1 Hot Gas Muffler

Unit shall be selected by the manufacturer for maximum noise attenuation. Units rated for 100 kW (30 tons) capacity and under may be field tunable type.

2.9.5.2 Liquid Receiver

A liquid receiver shall be provided when a system's condenser or compressor does not contain a refrigerant storage capacity of at least 20 percent in excess of a fully charged system. Receiver shall be designed, filled, and rated in accordance with the recommendations of ARI 495, except as modified herein. Receiver shall be fitted to include an inlet connection; an outlet drop pipe with oil seal and oil drain where necessary; two bull's-eye liquid level sight glass in same vertical plane, 90 degrees apart and perpendicular to axis of receiver or external gauge glass with metal guard and automatic stop valves; thermal well for thermostat; float switch column; external float switches; and purge, charge, equalizing, pressurizing, plugged drain and service valves on the inlet and outlet connections. Receiver shall be provided with a relief valve of capacity

and setting in accordance with ASHRAE 15.

2.9.5.3 Oil Separator

Separator shall be the high efficiency type and be provided with removable flanged head for ease in removing float assembly and removable screen cartridge assembly. Pressure drop through a separator shall not exceed 70 kPa (10 psi) during the removal of hot gas entrained oil. Connections to compressor shall be as recommended by the compressor manufacturer. Separator shall be provided with an oil float valve assembly or needle valve and orifice assembly, drain line shutoff valve, sight glass, filter for removal of all particulate sized 10 microns and larger, thermometer and low temperature thermostat fitted to thermal well, immersion heater, external float valve fitted with three-valve bypass, and strainer.

2.9.5.4 Oil Reservoir

Reservoir capacity shall equal one charge of all connected compressors. Reservoir shall be provided with an external liquid gauge glass, plugged drain, and isolation valves. Vent piping between the reservoir and the suction header shall be provided with a 35 kPa (5 psi) pressure differential relief valve. Reservoir shall be provided with the manufacturer's standard filter on the oil return line to the oil level regulators.

2.9.6 Cabinet Construction

Casings for the specified unitary equipment shall be constructed of galvanized steel or aluminum sheet metal and galvanized or aluminum structural members. Minimum thickness of single wall exterior surfaces shall be 1.3 mm (18 gauge) galvanized steel or 1.8 mm (.071 inch) thick aluminum on units with a capacity above 70 kW (20 tons) and 1.0 mm (20 gauge) galvanized steel or 1.6 mm (0.064 inch) thick aluminum on units with a capacity less than 70 kW (20 tons). Casing shall be fitted with lifting provisions, access panels or doors, fan vibration isolators, electrical control panel, corrosion-resistant components, structural support members, insulated condensate drip pan and drain, and internal insulation in the cold section of the casing. Where double-wall insulated construction is proposed, minimum exterior galvanized sheet metal thickness shall be 1.0 mm (20 gauge). Provisions to permit replacement of major unit components shall be incorporated. Penetrations of cabinet surfaces, including the floor, shall be sealed. Unit shall be fitted with a drain pan which extends under all areas where water may accumulate. Drain pan shall be fabricated from Type 300 stainless steel, galvanized steel with protective coating as required, or an approved plastic material. Pan insulation shall be water impervious. Extent and effectiveness of the insulation of unit air containment surfaces shall prevent, within limits of the specified insulation, heat transfer between the unit exterior and ambient air, heat transfer between the two conditioned air streams, and condensation on surfaces. Insulation shall conform to ASTM C 1071. Paint and finishes shall comply with the requirements specified in paragraph "Factory Coating".

2.9.6.1 Indoor Cabinet

Indoor cabinets shall be suitable for the specified indoor service and enclose all unit components.

2.9.6.2 Outdoor Cabinet

Outdoor cabinets shall be suitable for outdoor service with a weathertight, insulated and corrosion-protected structure. Cabinets constructed exclusively for indoor service which have been modified for outdoor service are not acceptable.

2.10 SIGNS

Metal signs shall be provided having letters not less than 13 mm inches in height designating the main shut-off valves to each refrigerant vessel, the electrical control of the refrigeration equipment, and the pressure limiting device.

2.11 INSULATION

2.11.1 Field Installed Insulation

Field installed insulation shall be as specified in Section 15080 THERMAL INSULATION FOR MECHANICAL SYSTEMS.

2.11.2 Factory Installed Insulation

Factory applied insulation shall be as specified for the equipment to be insulated except that refrigerant suction lines shall be insulated with unicellular plastic foam. Insulation shall comply with the fire hazard rating specified in Section 15080 THERMAL INSULATION FOR MECHANICAL SYSTEMS.

2.12 TEMPERATURE CONTROLS

Temperature controls shall be in accordance with Section 15950 HEATING, VENTILATING AND AIR CONDITIONING HVAC CONTROL SYSTEMS.

2.13 DUCTWORK COMPONENTS

2.13.1 Metal Ductwork

Every aspect of metal ductwork construction, including fittings and components, shall comply with SMACNA-06 unless otherwise specified. Elbows shall be radius type with a centerline radius of 1-1/2 times the width or diameter of the duct where space permits. Otherwise, elbows having a minimum radius equal to the width or diameter of the duct or square elbows with factory fabricated turning vanes may be used. Static pressure Class 125, 250, 500 Pa (1/2, 1, and 2 inch w.g.) ductwork shall meet the requirements of Seal Class C. Class 750 through 2500 Pa (3 through 10 inch) shall meet the requirements of Seal Class A. Sealants shall conform to fire hazard classification specified in Section 15080 THERMAL INSULATION FOR MECHANICAL SYSTEMS. Pressure sensitive tape shall not be used as a sealant. Spiral lock seam duct, and flat oval shall be made with duct sealant and locked with not less than 3 equally spaced drive screws or other approved methods indicated in SMACNA-06. The sealant shall be applied to the exposed male part of the fitting collar so that the sealer will be on the inside of the joint and fully protected by the metal of the duct fitting. One brush coat of the sealant shall be applied over the outside of the joint to at least 50 mm band width covering all screw heads and joint gap. Dents in the male portion of the slip fitting collar will not be acceptable.

2.13.1.1 Transitions

Diverging air flow transitions shall be made with each side pitched out a maximum of 15 degrees, for an included angle of 30 degrees. Transitions for converging air flow shall be made with each side pitched in a maximum of 30 degrees, for an included angle of 60 degrees, or shall be as indicated. Factory-fabricated reducing fittings for systems using round duct sections when formed to the shape of the ASME short flow nozzle, need not comply with the maximum angles specified.

2.13.1.2 Insulated Nonmetallic Flexible Duct Runouts

Flexible duct runouts shall be used only where indicated. Runouts shall not exceed 3 m in length, shall be preinsulated, factory fabricated, and comply with NFPA 90A and UL 181. Either field or factory applied vapor barrier shall be provided. Where coil induction or high velocity units are supplied with vertical air inlets, a streamlined and vaned and mitered elbow transition piece shall be provided for connection to the flexible duct or hose. The last elbow to these units, other than the vertical air inlet type, shall be a die-stamped elbow and not a flexible connector. Insulated flexible connectors may be used as runouts. The insulation material surface shall not be exposed to the air stream.

2.13.1.3 General Service Duct Connectors

A flexible duct connector approximately 150 mm in width shall be provided where sheet metal connections are made to fans or where ducts of dissimilar metals are connected. For round/oval ducts, the flexible material shall be secured by stainless steel or zinc-coated, iron clinch-type draw bands. For rectangular ducts, the flexible material locked to metal collars shall be installed using normal duct construction methods. The composite connector system shall comply with UL 214 and be classified as "flame-retarded fabrics" in UL Blgmat Dir.

2.13.2 Fibrous Glass Ductwork

Fibrous glass ductwork may be provided in lieu of sheet metal ductwork except that fibrous glass ductwork will not be allowed in fan and equipment rooms, where subject to traffic or weather damage, for outside air intakes, for risers of more than two stories, in kitchen or fume exhaust ducts, to convey solids or corrosive gases, in concrete, for burial below grade, as casings or housings, or in systems used for life support systems. Fibrous glass ductwork, including all components, shall be fabricated in accordance with NAIMA AH115 where the velocity and the static pressure are within its scope. Where the velocity or static pressure exceeds these limits, the ductwork manufacturer shall certify that the ductwork is intended for the velocities and pressures to be encountered, and that the proposed installation meets all performance criteria specified herein for metal ductwork. Field or factory fabricated fibrous glass ductwork shall conform to UL 181, Class 1. Duct wall penetrations, transverse joints and longitudinal seams shall be sealed as instructed by the manufacturer by one of the methods prescribed by NAIMA AH115, where applicable, except that pressure sensitive tape shall not be used as a sealant. Items necessary for a complete installation shall be provided as specified for sheet metal duct systems.

2.13.3 Ductwork Insulation

Ductwork insulation and related materials shall conform to the requirements of Section 15080 THERMAL INSULATION FOR MECHANICAL SYSTEMS.

2.13.4 Ductwork Accessories

2.13.4.1 Duct Access Doors

Access doors shall be provided in ductwork where indicated and at all air flow measuring devices, automatic dampers, fire dampers, coils, thermostats, and other apparatus requiring service and inspection in the duct system, and unless otherwise shown, shall conform to SMACNA-06. Access doors shall be provided upstream and downstream of air flow measuring primaries and heating and cooling coils. Doors shall be minimum 375 x 450 mm (15 x 18 inches), unless otherwise shown. Where duct size will not accommodate this size door, the doors shall be made as large as practicable. Doors 600 x 600 mm (24 x 24 inches) or larger shall be provided with fasteners operable from both sides. Doors in insulated ducts shall be the insulated type.

2.13.4.2 Splitters and Manual Balancing Dampers

Splitters and manual balancing dampers shall be furnished with accessible operating mechanisms. Where operators occur in finished portions of the building, operators shall be chromium plated with all exposed edges rounded. Splitters shall be operated by quadrant operators or 4.75 mm (3/16 inch) rod brought through the side of the duct with locking setscrew and bushing. Two rods are required on splitters over 8 inches. Manual volume control dampers shall be operated by locking-type quadrant operators. Dampers and splitters shall be 2 gauges heavier than the duct in which installed. Unless otherwise indicated, multileaf dampers shall be opposed blade type with maximum blade width of 300 mm. Access doors or panels shall be provided for all concealed damper operators and locking setscrews. Unless otherwise indicated, the locking-type quadrant operators for dampers, when installed on ducts to be thermally insulated, shall be provided with stand-off mounting brackets, bases, or adapters to provide clearance between the duct surface and the operator not less than the thickness of the insulation. Stand-off mounting items shall be integral with the operator or standard accessory of the damper manufacturer. Volume dampers shall be provided where indicated.

2.13.4.3 Air Deflectors and Branch Connections

Air deflectors shall be provided at all duct mounted supply outlets, at all takeoff or extension collars to supply outlets, at all duct branch takeoff connections, and at all 90 degree elbows, as well as at all locations as indicated on the drawings or shown in the Sheet Metal and Air Contractors National Association manuals. Air deflectors, except those installed in 90 degree elbows, shall be provided with an approved means of adjustment. Adjustment shall be made from easily accessible means inside the duct or from an adjustment with sturdy lock on the face of the duct. When installed on ducts to be thermally insulated, external adjustments shall be provided with stand-off mounting brackets, integral with the adjustment device, to provide clearance between the duct surface and the adjustment device not less than the thickness of the thermal insulation. Air deflectors shall be factory-fabricated units consisting of curved turning vanes or louver blades designed to provide uniform air distribution and change of direction with minimum turbulence or pressure loss. Air deflectors shall be factory or field assembled. Blade air deflectors, also called blade air extractors, shall be approved factory fabricated units consisting of equalizing grid and adjustable blade and lock. Adjustment shall be easily made from the face of the diffuser or by position adjustment and lock external to the duct. Stand-off brackets shall be

provided on insulated ducts and are described herein before. Fixed air deflectors, also called turning vanes, shall be provided in all 90 degree elbows. Turning vanes shall be designed as shown in the Sheet Metal and Air Condition Contractors National Association manuals.

2.13.5 Duct Sleeves, Framed Prepared Openings, Closure Collars

2.13.5.1 Duct Sleeves

Duct sleeves shall be provided for all round ducts 375 mm in diameter or less passing through floors, walls, ceilings, or roof, and installed during construction of the floor, wall, ceiling, or roof. Round ducts larger than 375 mm in diameter and all square, rectangular, and oval ducts passing through floors, walls, ceilings, or roof shall be installed through framed prepared openings. The Contractor shall be responsible for the proper size and location of sleeves and prepared openings. Sleeves and framed openings are also required where grilles, registers, and diffusers are installed at the openings. Framed prepared openings shall be fabricated from 1.0 mm (20 gauge) galvanized steel, unless otherwise indicated. Where sleeves are installed in bearing walls or partitions, black steel pipe, ASTM A 53, Schedule 20 shall be used. Sleeve shall provide 25 mm clearance between the duct and the sleeve or 25 mm clearance between the insulation and the sleeve for insulated ducts.

2.13.5.2 Framed Prepared Openings

Openings shall have 25 mm clearance between the duct and the opening or 25 mm clearance between the insulation and the opening for insulated ducts.

2.13.5.3 Closure Collars

Collars shall be fabricated of galvanized sheet metal not less than 100 mm wide, unless otherwise indicated, and shall be installed on exposed ducts on each side of walls or floors where sleeves or prepared openings are provided. Collars shall be installed tight against surfaces. Collars shall fit snugly around the duct or insulation. Sharp edges of the collar around insulated duct shall be ground smooth to preclude tearing or puncturing the insulation covering or vapor barrier. Collars for round ducts 375 mm in diameter or less shall be fabricated from 1.0 mm (20 gauge) galvanized steel. Collars for round ducts larger than 375 mm and all square, and rectangular ducts shall be fabricated from 1.3 mm (18 gauge) galvanized steel. Collars shall be installed with fasteners on maximum 150 mm centers, except that not less than 4 fasteners shall be used.

2.13.6 Sound Attenuation Equipment

2.13.6.1 Acoustical Duct Liner

Acoustical duct lining shall be fibrous glass designed exclusively for lining ductwork and conform to the requirements of ASTM C 1071, Type I and II. Liner composition may be uniform density, graduated density, or dual density, as standard with the manufacturer. Lining shall be coated, not less than 25.4 mm (1 inch) thick, nominal, and where applicable be of sufficient thickness to be thermally equivalent to the thickness of insulation specified in Section 15080 THERMAL INSULATION FOR MECHANICAL SYSTEMS. Duct sizes shown shall be increased to compensate for the thickness of the lining used. In lieu of sheet metal duct with field-applied acoustical lining, acoustically equivalent lengths of fibrous glass duct or factory fabricated double-walled internally insulated duct

with perforated liner may be provided. Net insertion loss value, static pressure drop, and air flow velocity capacity data shall be certified by a nationally recognized independent acoustical laboratory.

2.13.7 Diffusers, Registers, and Grilles

Units shall be factory-fabricated of steel, corrosion-resistant steel, or aluminum and shall distribute the specified quantity of air evenly over space intended without causing noticeable drafts, air movement faster than 0.25 m/s (50 fpm) in occupied zone, or dead spots anywhere in the conditioned area. Outlets for diffusion, spread, throw, and noise level shall be as required for specified performance. Performance shall be certified in accordance with ADC 1062:GRD. Inlets and outlets shall be sound rated and certified in accordance with ADC 1062:GRD. Sound power level shall be as indicated. Diffusers and registers shall be provided with volume damper with accessible operator, unless otherwise indicated; or if standard with the manufacturer, an automatically controlled device will be acceptable. Volume dampers shall be opposed blade type for all diffusers and registers, except linear slot diffusers. Linear slot diffusers shall be provided with round or elliptical balancing dampers. Where the inlet and outlet openings are located less than 2 m above the floor, they shall be protected by a grille or screen in accordance with NFPA 90A.

2.13.7.1 Diffusers

Diffuser types shall be as indicated. Ceiling mounted units shall be furnished with antismudge devices, unless the diffuser unit minimizes ceiling smudging through design features. Diffusers shall be provided with air deflectors of the type indicated. Air handling troffers or combination light and ceiling diffusers shall conform to the requirements of UL Elecconst Dir for the interchangeable use as cooled or heated air supply diffusers or return air units. Ceiling mounted units shall be installed with rims tight against ceiling. Sponge rubber gaskets shall be provided between ceiling and surface mounted diffusers for air leakage control. Suitable trim shall be provided for flush mounted diffusers. Duct collar connecting the duct to diffuser shall be airtight and shall not interfere with volume controller. Return or exhaust units shall be similar to supply diffusers.

2.13.7.2 Registers and Grilles

Units shall be four-way directional-control type, except that return and exhaust registers may be fixed horizontal or vertical louver type similar in appearance to the supply register face. Registers shall be provided with sponge-rubber gasket between flanges and wall or ceiling. Wall supply registers shall be installed at least 150 mm below the ceiling unless otherwise indicated. Return and exhaust registers shall be located 150 mm above the floor unless otherwise indicated. Four-way directional control may be achieved by a grille face which can be rotated in 4 positions or by adjustment of horizontal and vertical vanes. Grilles shall be as specified for registers, without volume control damper.

2.14 REFRIGERANT PIPING

Refrigerant piping, valves, fittings, and accessories shall conform to the requirements of ASHRAE 15 and ASME B31.5, except as specified.

2.14.1 Steel Pipe

Steel pipe for refrigerant service shall conform to ASTM A 53, Schedule 40, Type E or S, Grades A or B. Type F pipe shall not be used.

2.14.2 Joints and Fittings, Steel Pipe

Joints and fittings shall be steel butt-welding, socket-welding, or malleable iron threaded type. Pipe shall be welded except that joints on lines 50 mm (2 inches) and smaller may be threaded. Threads shall be tapered type conforming to ASME B1.20.1. The malleable iron threaded type fitting shall be of a weight corresponding to adjacent pipe. Flanges and flange faces of fittings shall be tongue-and-groove type with gaskets suitable for the refrigerant used; size 25 mm (1 inch) and smaller shall be oval, two-bolt type; size above 25 mm (1 inch), up to and including 100 mm (4 inches), shall be square four-bolt type; and sizes over 100 mm (4 inches) shall be round.

2.14.3 Steel Tubing

Steel tubing for refrigeration service shall be in accordance with ASTM A 334/A 334M, Grade 1. Tubing with a nominal diameter of 10 mm (3/8 inch) or 15 mm (1/2 inch) shall have a wall thickness of 1.22 mm (0.049 inches). Tubing with a nominal diameter of 20 mm (3/4 inch) through 50 mm (2 inches) shall have a wall thickness of 1.62 mm (0.065 inches). Tubing with a nominal diameter of 65 through 100 mm (2 1/2 inches through 4 inches) shall have a wall thickness of 2.4 mm (0.095 inches). Steel tubing shall be cold-rolled, electric-forged, welded-steel. One end of the tubing shall be provided with a socket. Steel tubing shall be cleaned, dehydrated, and capped.

2.14.4 Joints and Fittings, Steel Tubing

Joints and fittings shall be socket type provided by the steel tubing manufacturer.

2.14.5 Copper Tubing

Copper tubing shall conform to ASTM B 280 annealed or hard drawn as required. Copper tubing shall be soft annealed where bending is required and hard drawn where no bending is required. Soft annealed copper tubing shall not be used in sizes larger than 35 mm (1-3/8 inches). Joints shall be brazed except that joints on lines 22 mm (7/8 inch) and smaller may be flared.

2.14.6 Joints and Fittings, Copper Tubing

Copper tube joints and fittings shall be flare joint type with short-shank flare, or solder-joint pressure type. Joints and fittings for brazed joint shall be wrought-copper or forged-brass sweat fittings. Cast sweat-type joints and fittings shall not be allowed for brazed joints.

2.14.7 Valves

Valves shall be pressure and temperature rated for contained refrigerant service and shall comply with ASME B31.5. Metals of construction shall be ferrous or copper based. Atmosphere exposed valve stems shall be stainless steel or corrosion resistant metal plated carbon steel. Valve body connections shall be brazed or welded socket, flanged or combination thereof. Threaded connections shall not be used, except in pilot pressure

or gauge lines where maintenance disassembly is required and welded flanges cannot be used. Valves shall be suitable for or fitted with extended copper ends for brazing in-place without disassembly. Ferrous body valves shall be fitted with factory fabricated and brazed copper transitions. To minimize system pressure drops, where practicable, globe valves shall be angle body type, and straight line valves shall be full port ball type. Control valve inlets shall be fitted with integral or adapted strainer or filter where recommended or required by manufacturer. Valves shall be cleaned and sealed moisture-tight.

2.14.7.1 Refrigerant-Stop Valves

Valves, in sizes through 15 mm (5/8 inch), shall be handwheel operated, straight or angle, packless diaphragm globe type with back-seating stem, brazed ends, except where SAE flare or retained seal cap connections are required. In sizes over 15 mm (5/8 inch), valves shall be globe or angle type, wrench operated with ground-finish stems, or ball valves, packed especially for refrigerant service, back seated, and provided with seal caps. Refrigerant isolation and shut-off valves shall have retained or captive spindles and facilities for tightening or replacement of the gland packing under line pressure as applicable. Stop valves shall have back-seating plated steel stem, bolted bonnet in sizes 25 mm (1-1/8 inches) OD and larger, integral or flanged transition brazed socket. Valves in sizes through 65 mm (2-1/2 inches) shall be end-entry body assembly, full-port, floating ball type, with equalizing orifice fitted chrome plated ball, seats and seals of tetrafluoroethylene, chrome plated or stainless steel stem, and seal cap. In sizes 100 mm (4 inch) IPS and larger, and in smaller sizes where carbon steel piping is used, valve bodies shall be tongue and groove flanged and complete with mating flange, gaskets and bolting for socket or butt-weld connection. Purge, charge and receiver valves shall be of manufacturer's standard configuration.

2.14.7.2 Check Valves

Valve shall be designed for service application, spring-loaded type where required, with resilient seat and with flanged body in sizes 15 mm (1/2 inch) and larger. Valve shall provide positive shut-off at 14 kPa (2 psi) differential pressure.

2.14.7.3 Liquid Solenoid Valves

Valves shall comply with ARI 760 and be suitable for continuous duty with applied voltages 15 percent under and 5 percent over nominal rated voltage at maximum and minimum encountered pressure and temperature service conditions. Valves shall be direct-acting or pilot-operating type, packless, except that packed stem, seal capped, manual lifting provisions shall be furnished. Solenoid coils shall be moisture-proof, UL approved, totally encapsulated or encapsulated and metal jacketed as required. Valves shall have safe working pressure of 2760 kPa (400 psi) and a maximum operating pressure differential of at least 1375 kPa (200 psi) at 85 percent rated voltage. Valves shall have an operating pressure differential suitable for the refrigerant used.

2.14.7.4 Expansion Valves

Expansion valves conform to requirements of ARI 750. Valve shall be of the diaphragm and spring type with internal or external equalizers, and bulb and capillary tubing. Valve shall be provided with an external superheat adjustment along with a seal cap. Internal equalizers may be utilized

where flowing refrigerant pressure drop between outlet of the valve and inlet to the evaporator coil is negligible and pressure drop across the evaporator is less than the pressure difference corresponding to 1 degrees C (2 degrees F) of saturated suction temperature at evaporator conditions. Bulb charge shall be determined by the manufacturer for the application and such that liquid will remain in the bulb at all operating conditions. Gas limited liquid charged valves and other valve devices for limiting evaporator pressure shall not be used without a distributor or discharge tube or effective means to prevent loss of control when bulb becomes warmer than valve body. Pilot-operated valves shall have a characterized plug to provide required modulating control. A de-energized solenoid valve may be used in the pilot line to close the main valve in lieu of a solenoid valve in the main liquid line. An isolatable pressure gauge shall be provided in the pilot line, at the main valve. Automatic pressure reducing or constant pressure regulating expansion valves may be used only where indicated or for constant evaporator loads.

2.14.7.5 Safety Relief Valve

Valve shall be the two-way type. Single type valves shall be used only where indicated. Valve shall bear the ASME code symbol. Valve capacity shall be certified by the National Board of Boiler and Pressure Vessel Inspectors. Valve shall be of an automatically reseating design after activation.

2.14.7.6 Evaporator Pressure Regulators, Direct-Acting

Valve shall include a diaphragm/spring power assembly, external pressure adjustment with seal cap, and pressure gauge port. Valve shall maintain a constant inlet pressure by balancing inlet pressure on diaphragm against an adjustable spring load. Pressure drop at system design load shall not exceed the pressure difference corresponding to a 1 degrees C change in saturated refrigerant temperature at evaporator operating suction temperature. Spring shall be selected for indicated maximum allowable suction pressure range.

2.14.7.7 Refrigerant Access Valves

Refrigerant access valves and hose connections shall be in accordance with ARI ANSI/ARI 720.

2.14.8 Accessories

2.14.9 Filter Driers

Driers shall conform to ARI ANSI/ARI 710. Sizes 15 mm (5/8 inch) and larger shall be the full flow, replaceable core type. Sizes 12 mm (1/2 inch) and smaller shall be the sealed type. Cores shall be of suitable desiccant that will not plug, cake, dust, channel, or break down, and shall remove water, acid, and foreign material from the refrigerant. Filter driers shall be constructed so that none of the desiccant will pass into the refrigerant lines. Minimum bursting pressure shall be 10.3 MPa (1,500 psi).

2.14.9.1 Sight Glass and Liquid Level Indicator

a. Assembly and Components: Assembly shall be pressure- and temperature-rated and constructed of materials suitable for the service. Glass shall be borosilicate type. Ferrous components

subject to condensation shall be electro-galvanized.

b. Gauge Glass: Gauge glass shall include top and bottom isolation valves fitted with automatic checks, and packing followers; red-line or green-line gauge glass; elastomer or polymer packing to suit the service; and gauge glass guard.

c. Bull's-Eye and Inline Sight Glass Reflex Lens: Bull's-eye and inline sight glass reflex lens shall be provided for dead-end liquid service. For pipe line mounting, two plain lenses in one body suitable for backlighted viewing shall be provided.

d. Moisture Indicator: Indicator shall be a self-reversible action, moisture reactive, color changing media. Indicator shall be furnished with full-color-printing tag containing color, moisture and temperature criteria. Unless otherwise indicated, the moisture indicator shall be an integral part of each corresponding sight glass.

2.14.9.2 Vibration Dampeners

Dampeners shall be of the all-metallic bellows and woven-wire type.

2.14.9.3 Flexible Pipe Connectors

Connector shall be pressure and temperature rated for the service in accordance with ASHRAE 15 and ASME B31.5. Connector shall be a composite of interior corrugated phosphor bronze or Type 300 Series Stainless steel, as required for fluid service, with exterior reinforcement of bronze, stainless steel or monel wire braid. Assembly shall be constructed with a safety factor of not less than 4 at 150 degrees C (300 degrees F). Unless otherwise indicated, the length of a flexible connector shall be as recommended by the manufacturer for the service intended.

2.14.9.4 Strainers

Strainers used in refrigerant service shall have brass or cast iron body, Y-or angle-pattern, cleanable, not less than 60-mesh noncorroding screen of an area to provide net free area not less than ten times the pipe diameter with pressure rating compatible with the refrigerant service. Screens shall be stainless steel or monel and reinforced spring-loaded where necessary for bypass-proof construction.

2.14.9.5 Brazing Materials

Brazing materials for refrigerant piping shall be in accordance with AWS A5.8, Classification BCuP-5.

2.15 DRAIN AND MISCELLANEOUS PIPING

Piping, fittings, valves and accessories for drain and miscellaneous services shall be in accordance with Section 15400 PLUMBING, GENERAL PURPOSE.

2.16 FABRICATION

2.16.1 Factory Coating

Unless otherwise specified, equipment and component items, when fabricated

from ferrous metal, shall be factory finished with the manufacturer's standard finish, except that items located outside of buildings shall have weather resistant finishes that will withstand 125 hours exposure to the salt spray test specified in ASTM B 117 using a 25 percent sodium chloride solution. Immediately after completion of the test, the specimen shall show no signs of blistering, wrinkling, cracking, or loss of adhesion and no sign of rust creepage beyond 3 mm on either side of the scratch mark. Cut edges of galvanized surfaces where hot-dip galvanized sheet steel is used shall be coated with a zinc-rich coating conforming to ASTM D 520, Type I.

2.16.2 Field Painting

Painting required for surfaces not otherwise specified, and finish painting of items only primed at the factory are specified in Section 09900PAINTING, GENERAL.

2.16.2.1 Color Coding

Color coding for piping identification is specified in Section 09900 PAINTING, GENERAL.

PART 3 EXECUTION

3.1 INSTALLATION

Work shall be performed in accordance with the manufacturer's published diagrams, recommendations, and equipment warranty requirements. Where equipment is specified to conform to the requirements of ASME BPV VIII Div 1 and ASME BPV IX, the design, fabrication, and installation of the system shall conform to ASME BPV VIII Div 1 and ASME BPV IX.

3.1.1 Equipment

Refrigeration equipment and the installation thereof shall conform to ASHRAE 15. Necessary supports shall be provided for all equipment, appurtenances, and pipe as required, including frames or supports for compressors, pumps, cooling towers, condensers, and similar items. Compressors shall be isolated from the building structure. If mechanical vibration isolators are not provided, vibration absorbing foundations shall be provided. Each foundation shall include isolation units consisting of machine and floor or foundation fastenings, together with intermediate isolation material. Other floor-mounted equipment shall be set on not less than a 150 mm concrete pad doweled in place. Concrete foundations for floor mounted pumps shall have a mass equivalent to three times the weight of the components, pump, base plate, and motor to be supported. In lieu of concrete pad foundation, concrete pedestal block with isolators placed between the pedestal block and the floor may be provided. Concrete pedestal block shall be of mass not less than three times the combined pump, motor, and base weights. Isolators shall be selected and sized based on load-bearing requirements and the lowest frequency of vibration to be isolated. Lines connected to pumps mounted on pedestal blocks shall be provided with flexible connectors. Foundation drawings, bolt-setting information, and foundation bolts shall be furnished prior to concrete foundation construction for all equipment indicated or required to have concrete foundations. Concrete for foundations shall be as specified in Section 03300 CAST-IN-PLACE STRUCTURAL CONCRETE. Equipment shall be properly leveled, aligned, and secured in place in accordance with manufacturer's instructions.

3.1.2 Mechanical Room Ventilation

The ventilation system shall be in accordance with Section 15895 AIR SUPPLY, DISTRIBUTION, VENTILATION, AND EXHAUST SYSTEM.

3.1.3 Building Surface Penetrations

Sleeves in nonload bearing surfaces shall be galvanized sheet metal, conforming to ASTM A 653/A 653M, Coating Class G-90, 1.0 mm (20 gauge). Sleeves in load bearing surfaces shall be uncoated carbon steel pipe, conforming to ASTM A 53, Standard weight. Sealants shall be applied to moisture and oil-free surfaces and elastomers to not less than 13 mm depth. Sleeves shall not be installed in structural members.

3.1.3.1 General Service Areas

Each sleeve shall extend through its respective wall, floor, or roof, and shall be cut flush with each surface. Pipes passing through concrete or masonry wall or concrete floors or roofs shall be provided with pipe sleeves fitted into place at the time of construction. Sleeves shall be of such size as to provide a minimum of 6.35 mm all-around clearance between bare pipe and sleeves or between jacketed-insulation and sleeves. Except in pipe chases or interior walls, the annular space between pipe and sleeve or between jacket over-insulation and sleeve shall be sealed in accordance with Section 07900 JOINT SEALING.

3.1.3.2 Waterproof Penetrations

Pipes passing through roof or floor waterproofing membrane shall be installed through a 17-ounce copper sleeve, or a 0.81 mm (0.032 inch) thick aluminum sleeve, each within an integral skirt or flange. Flashing sleeve shall be suitably formed, and skirt or flange shall extend not less than 200 mm from the pipe and be set over the roof or floor membrane in a troweled coating of bituminous cement. The flashing sleeve shall extend up the pipe a minimum of 50 mm above the roof or floor penetration. The annular space between the flashing sleeve and the bare pipe or between the flashing sleeve and the metal-jacket-covered insulation shall be sealed as indicated. Penetrations shall be sealed by either one of the following methods.

a. Waterproofing Clamping Flange: Pipes up to and including 250 mm in diameter passing through roof or floor waterproofing membrane may be installed through a cast iron sleeve with caulking recess, anchor lugs, flashing clamp device, and pressure ring with brass bolts. Waterproofing membrane shall be clamped into place and sealant shall be placed in the caulking recess.

b. Modular Mechanical Type Sealing Assembly: In lieu of a waterproofing clamping flange and caulking and sealing of annular space between pipe and sleeve or conduit and sleeve, a modular mechanical type sealing assembly may be installed. Seals shall consist of interlocking synthetic rubber links shaped to continuously fill the annular space between the pipe/conduit and sleeve with corrosion protected carbon steel bolts, nuts, and pressure plates. Links shall be loosely assembled with bolts to form a continuous rubber belt around the pipe with a pressure plate under each bolt head and each nut. After the seal assembly is properly positioned in the sleeve, tightening of the bolt shall

cause the rubber sealing elements to expand and provide a watertight seal rubber sealing elements to expand and provide a watertight seal between the pipe/conduit seal between the pipe/conduit and the sleeve. Each seal assembly shall be sized as recommended by the manufacturer to fit the pipe/conduit and sleeve involved. The Contractor electing to use the modular mechanical type seals shall provide sleeves of the proper diameters.

3.1.3.3 Fire-Rated Penetrations

Penetration of fire-rated walls, partitions, and floors shall be sealed as specified in Section 07270 FIRESTOPPING.

3.1.3.4 Escutcheons

Finished surfaces where exposed piping, bare or insulated, pass through floors, walls, or ceilings, except in boiler, utility, or equipment rooms, shall be provided with escutcheons. Where sleeves project slightly from floors, special deep-type escutcheons shall be used. Escutcheon shall be secured to pipe or pipe covering.

3.1.4 Access Panels

Access panels shall be provided for all concealed valves vents, controls, and items requiring inspection or maintenance. Access panels shall be of sufficient size and located so that the concealed items may be serviced and maintained or completely removed and replaced. Access panels shall be as specified in Section 05500 MISCELLANEOUS METALS.

3.1.5 General Piping Installation

3.1.5.1 Brazed Joints

Brazing shall be performed in accordance with AWS-01, except as modified herein. During brazing, the pipe and fittings shall be filled with a pressure regulated inert gas, such as nitrogen, to prevent the formation of scale. Before brazing copper joints, both the outside of the tube and the inside of the fitting shall be cleaned with a wire fitting brush until the entire joint surface is bright and clean. Brazing flux shall not be used. Surplus brazing material shall be removed at all joints. Steel tubing joints shall be made in accordance with the manufacturer's recommendations. Joints in steel tubing shall be painted with the same material as the baked-on coating within 8 hours after joints are made. Tubing shall be protected against oxidation during brazing by continuous purging of the inside of the piping using nitrogen. Piping shall be supported prior to brazing and not be sprung or forced.

3.1.5.2 Threaded Joints

Threaded joints shall be made with tapered threads and made tight with PTFE tape complying with ASTM D 3308 or equivalent thread-joint compound applied to the male threads only. Not more than three threads shall show after the joint is made.

3.1.5.3 Welded Joints

Welded joints in steel refrigerant piping shall be fusion-welded. Changes in direction of piping shall be made with welded fittings only; mitering or notching pipe or other similar construction to form elbows or tees will not

be permitted. Branch connections shall be made with welding tees or forged welding branch outlets. Steel pipe shall be thoroughly cleaned of all scale and foreign matter before the piping is assembled. During welding, the pipe and fittings shall be filled with a pressure regulated inert gas, such as nitrogen, to prevent the formation of scale. Beveling, alignment, heat treatment, and inspection of weld shall conform to ASME B31.1. Weld defects shall be removed and rewelded at no additional cost to the Government. Electrodes shall be stored and dried in accordance with AWS D1.1 or as recommended by the manufacturer. Electrodes that have been wetted or that have lost any of their coating shall not be used.

3.1.5.4 Flanged Joints

Flanged joints shall be assembled square end tight with matched flanges, gaskets, and bolts. Gaskets shall be suitable for use with the refrigerants to be handled. When steel refrigerant piping is used, union or flange joints shall be provided in each line immediately preceding the connection to each piece of equipment requiring maintenance, such as compressors, coils, refrigeration equipment, control valves, and other similar items.

3.1.5.5 Flared Connections

When flared connections are used, a suitable lubricant shall be used between the back of the flare and the nut in order to avoid tearing the flare while tightening the nut.

3.1.6 Condenser Water Piping

3.1.6.1 Directional Changes

Changes in direction shall be made with fittings, except that bending of pipe 100 mm (4 inches) and smaller will be permitted, provided a pipe bender is used and wide weep bends are formed. The centerline radius of bends shall not be less than 6 diameters of the pipe. Bent pipe showing kinks, wrinkles, flattening, or other malformations will not be accepted.

3.1.6.2 Functional Requirements

Horizontal supply mains shall pitch down in the direction of flow as indicated. The grade shall not be less than 2 mm per meter. Reducing fittings shall be used for changes in pipe sizes. Open ends of pipelines and equipment shall be capped or plugged during installation to keep dirt or other foreign materials out of the system. Pipe not otherwise specified shall be uncoated. Connections to appliances shall be made with malleable iron unions for steel pipe 65 mm (2-1/2 inches) or less in diameter, and with flanges for pipe 75 mm (3 inches) or more in diameter. Connections between ferrous and copper piping shall be electrically isolated from each other with dielectric unions or flanges. Piping located in air plenums shall conform to NFPA 90A requirements. Pipe and fittings installed in inaccessible conduits or trenches under concrete floor slabs shall be welded.

3.1.6.3 Valves

Isolation gate or ball valves shall be installed on each side of each piece of equipment, at the midpoint of all looped mains, and at any other points indicated or required for draining, isolating, or sectionalizing purpose. Isolation valves may be omitted where balancing cocks are installed to

provide both balancing and isolation functions. Each valve except check valves shall be identified. Valves in horizontal lines shall be installed with stems horizontal or above.

3.1.6.4 Air Vents

Air vents shall be provided at all high points, on all water coils, and where indicated to ensure adequate venting of the piping system.

3.1.6.5 Drains

Drains shall be provided at all low points and where indicated to ensure complete drainage of the piping. Drains shall be accessible, and shall consist of nipples and caps or plugged tees unless otherwise indicated.

3.1.6.6 Flexible Pipe Connectors

Preinsulated flexible pipe connectors shall be attached to other components in strict accordance with the latest printed instructions of the manufacturer to ensure a vapor tight joint. Hangers, when required to suspend the connectors, shall be of the type recommended by the flexible pipe connector manufacturer and shall be provided at the intervals recommended.

3.1.7 Flanges and Unions

Except where copper tubing is used, union or flanged joints shall be provided in each line immediately preceding the connection to each piece of equipment or material requiring maintenance such as coils, pumps, control valves, and other similar items.

3.1.7.1 Grooved Mechanical Joints

Grooves shall be prepared in accordance with the coupling manufacturer's instructions. Pipe and groove dimensions shall comply with the tolerances specified by the coupling manufacturer. The diameter of grooves made in the field shall be measured using a "go/no-go" gauge, vernier or dial caliper, or narrow-land micrometer. Groove width and dimension of groove from end of pipe shall be measured and recorded for each change in grooving tool setup to verify compliance with coupling manufacturer's tolerances.

3.1.8 Refrigeration Piping

Unless otherwise specified, pipe and fittings installation shall conform to requirements of ASME B31.5. Pipe shall be cut accurately to measurement established at the jobsite and worked into place without springing or forcing. Cutting or otherwise weakening of the building structure to facilitate piping installation will not be permitted without written approval. Pipes shall be cut square, shall have burrs removed by reaming, and shall be installed in a manner to permit free expansion and contraction without damage to joints or hangers. Filings, dust, or dirt shall be wiped from interior of pipe before connections are made.

3.1.8.1 Directional Changes

Changes in direction shall be made with fittings, except that bending of pipe 100 mm (4 inches) and smaller will be permitted, provided a pipe bender is used and wide-sweep bends are formed. The centerline radius of bends shall not be less than 6 diameters of the pipe. Bent pipe showing

kinks, wrinkles, or other malformations will not be accepted.

3.1.8.2 Functional Requirements

Piping shall be installed 4 mm per meter of pipe in the direction of flow to ensure adequate oil drainage. Open ends of refrigerant lines or equipment shall be properly capped or plugged during installation to keep moisture, dirt, or other foreign material out of the system. Piping shall remain capped until installation. Equipment piping shall be in accordance with the equipment manufacturer's recommendations and the contract drawings.

3.1.8.3 Manual Valves

Stop valves shall be installed on each side of each piece of equipment such as compressors, condensers, evaporators, receivers, and other similar items in multiple-unit installation, to provide partial system isolation as required for maintenance or repair. Angle and globe valves shall be installed with stems horizontal unless otherwise indicated. Ball valves shall be installed with stems positioned to facilitate operation and maintenance. Isolating valves for pressure gauges and switches shall be external to thermal insulation. Safety switches shall not be fitted with isolation valves. Thermal wells for insertion thermometers and thermostats shall extend beyond thermal insulation surface not less than 25 mm. Filter dryers having access ports may be considered a point of isolation. Purge valves shall be provided at all points of systems where accumulated noncondensible gases would prevent proper system operation. Valves shall be furnished to match line size, unless otherwise indicated or approved.

3.1.8.4 Expansion Valves

Expansion valves shall be installed with the thermostatic expansion valve bulb located on top of the suction line when the suction line is less than 54 mm (2-1/8 inches) in diameter and at the 4 o'clock or 8 o'clock position on lines larger than 54 mm (2-1/8 inches). The bulb shall be securely fastened with two clamps. The bulb shall be insulated. The bulb shall installed in a horizontal portion of the suction line, if possible, with the pigtail on the bottom. If the bulb must be installed in a vertical line, the bulb tubing shall be facing up.

3.1.8.5 Valve Identification

Each system valve, including those which are part of a factory assembly, shall be tagged. Tags shall be in alphanumeric sequence, progressing in direction of fluid flow. Tags shall be embossed, engraved, or stamped plastic or nonferrous metal of various shapes, sized approximately 34 mm (1-3/8 inch) diameter, or equivalent dimension, substantially attached to a component or immediately adjacent thereto. Tags shall be attached with nonferrous, heavy duty, bead or link chain, 14 gauge annealed wire, nylon cable bands or as approved. Tag numbers shall be referenced in Operation and Maintenance Manuals and system diagrams.

3.1.8.6 Vibration Dampers

Vibration damper shall be provided in the suction and discharge lines on spring mounted compressors. Vibration dampers shall be installed parallel with the shaft of the compressor and be anchored firmly at the upstream end on the suction line and the downstream end in the discharge line.

3.1.8.7 Strainers

Strainers shall be provided immediately ahead of solenoid valves and expansion devices and where indicated. Strainers may be an integral part of the expansion valve.

3.1.8.8 Filter Dryer

A liquid line filter dryer shall be provided on each refrigerant circuit located such that all liquid refrigerant passes through a filter dryer. Dryers shall be sized in accordance with the manufacturers recommendations. A dryer shall be installed such that it can be isolated from the system, the isolated portion of the system evacuated, and the filter dryer replaced. Dryers shall be installed in the horizontal position except replaceable core filter dryers may be installed in the vertical position with the access flange on the bottom.

3.1.8.9 Sight Glass

A moisture indicating sight glass shall be installed in all refrigerant circuits down stream of filter dryers and where indicated. Sight glass shall be full line size.

3.1.8.10 Flexible Connectors

Flexible metallic connectors shall be installed perpendicular to line of motion being isolated. Piping for equipment with bidirectional motion shall be fitted with two flexible connectors, in perpendicular planes. Reinforced elastomer flexible connectors shall be installed in accordance with manufacturer's instructions. Piping guides and restraints related to flexible connectors shall be provided as required.

3.1.9 Thermometers

Thermometers located within 1.5 m of floor may be rigid stem type. Where thermal well is located above 1.5 m above floor, thermometer shall be universal adjustable angle type or remote element type to 2.1 m above floor and remote element type where thermal well is 2.1 m or more above floor. Thermometers shall be located in coolant supply and return or waste lines at each heat exchanger, condenser water lines entering and leaving the condenser, at each automatic temperature control device without an integral thermometer, refrigerant liquid line leaving receiver, refrigerant suction line at each evaporator or liquid cooler, and where indicated or required for proper operation of equipment.

3.1.10 Piping Supports

Refrigerant pipe supports shall be in accordance with ASME B31.5. Hangers used to support piping 50 mm (2 inches) and larger shall be fabricated to permit adequate adjustment after erection while still supporting the load. Pipe guides and anchors shall be installed to keep pipes in accurate alignment, to direct the expansion movement, and to prevent buckling, swaying, and undue strain. Piping subjected to vertical movement, when operating temperatures exceed ambient temperatures, shall be supported by variable spring hangers and supports or by constant support hangers.

3.1.10.1 Seismic Requirements

Equipment shall be supported and braced to resist seismic loads as specified under Section 13080 SEISMIC PROTECTION FOR MECHANICAL, ELECTRICAL

EQUIPMENT. Structural steel required for reinforcement to properly support piping, headers, and equipment but not shown shall be provided under this section. Material used for support shall be as specified under Section 05120 STRUCTURAL STEEL.

3.1.10.2 Structural Attachments

Attachment to building structure concrete and masonry shall be by cast-in concrete inserts, built-in anchors, or masonry anchor devices. Inserts and anchors shall be applied with a safety factor not less than 5. Supports shall not be attached to metal decking. Masonry anchors for overhead applications shall be constructed of ferrous materials only. Material used for support shall be as specified under Section 05120 STRUCTURAL STEEL.

3.1.11 Pipe Hangers, Inserts, and Supports

Pipe hangers, inserts, and supports shall conform to MSS SP-58 and MSS SP-69, except as modified herein. Pipe hanger types 5, 12, and 26 shall not be used.

3.1.11.1 Hangers

Type 3 shall not be used on insulated piping. Type 24 may be used only on trapeze hanger systems or on fabricated frames.

3.1.11.2 Inserts

Type 18 inserts shall be secured to concrete forms before concrete is placed. Continuous inserts which allow more adjustments may be used if they otherwise meet the requirements for Type 18 inserts.

3.1.11.3 C-Clamps

Type 19 and 23 C-clamps shall be torqued per MSS SP-69 and have both locknuts and retaining devices, furnished by the manufacturer. Field-fabricated C-clamp bodies or retaining devices are not acceptable.

3.1.11.4 Angle Attachments

Type 20 attachments used on angles and channels shall be furnished with an added malleable-iron heel plate or adapter.

3.1.11.5 Saddles and Shields

Where Type 39 saddle or Type 40 shield are permitted for a particular pipe attachment application, the Type 39 saddle, connected to the pipe, shall be used on all pipe 100 mm (4 inches) and larger when the temperature of the medium is 16 degrees C or higher. Type 40 shields shall be used on all piping less than 100 mm (4 inches) and all piping 100 mm (4 inches) and larger carrying medium less than 16 degrees C. A high density insulation insert of cellular glass shall be used under the Type 40 shield for piping 50 mm (2 inches) and larger.

3.1.11.6 Horizontal Pipe Supports

Horizontal pipe supports shall be spaced as specified in MSS SP-69 and a support shall be installed not over 300 mm from the pipe fitting joint at each change in direction of the piping. Pipe supports shall be spaced not over 1.5 m apart at valves. Pipe hanger loads suspended from steel joist

with hanger loads between panel points in excess of 222 N (50 pounds) shall have the excess hanger loads suspended from panel points.

3.1.11.7 Vertical Pipe Supports

Vertical pipe shall be supported at each floor, except at slab-on-grade, and at intervals of not more than 4.5 m, not more than 2.4 m from end of risers, and at vent terminations.

3.1.11.8 Pipe Guides

Type 35 guides using, steel, reinforced polytetrafluoroethylene (PTFE) or graphite slides shall be provided where required to allow longitudinal pipe movement. Lateral restraints shall be provided as required. Slide materials shall be suitable for the system operating temperatures, atmospheric conditions, and bearing loads encountered.

3.1.11.9 Steel Slides

Where steel slides do not require provisions for restraint of lateral movement, an alternate guide method may be used. On piping 100 mm (4 inches) and larger, a Type 39 saddle shall be used. On piping under 100 mm (4 inches), a Type 40 protection shield may be attached to the pipe or insulation and freely rest on a steel slide plate.

3.1.11.10 Multiple Pipe Runs

In the support of multiple pipe runs on a common base member, a clip or clamp shall be used where each pipe crosses the base support member. Spacing of the base support members shall not exceed the hanger and support spacing required for an individual pipe in the multiple pipe run.

3.1.12 Pipe Alignment Guides

Pipe alignment guides shall be provided where indicated for expansion loops, offsets, and bends and as recommended by the manufacturer for expansion joints, not to exceed 1.5 m on each side of each expansion joint, and in lines 100 mm (4 inches) or smaller not more than 2 feet on each side of the joint.

3.1.13 Pipe Anchors

Anchors shall be provided wherever necessary or indicated to localize expansion or to prevent undue strain on piping. Anchors shall consist of heavy steel collars with lugs and bolts for clamping and attaching anchor braces, unless otherwise indicated. Anchor braces shall be installed in the most effective manner to secure the desired results using turnbuckles where required. Supports, anchors, or stays shall not be attached where they will injure the structure or adjacent construction during installation or by the weight of expansion of the pipeline. Where pipe and conduit penetrations of vapor barrier sealed surfaces occur, these items shall be anchored immediately adjacent to each penetrated surface, to provide essentially zero movement within penetration seal. Detailed drawings of pipe anchors shall be submitted for approval before installation.

3.1.14 Piping Identification

Each piping system and direction of fluid flow shall be identified in accordance with applicable provisions of ANSI A13.1 with color coded,

water, moisture and broad-spectrum temperature resistant, plastic labels.

3.1.15 Metal Ductwork

Installation shall be in accordance with SMACNA-06 unless otherwise indicated. Duct supports for sheet metal ductwork shall be in accordance with SMACNA-06, unless otherwise specified. Friction beam clamps indicated in SMACNA-06 will not be used. Supports on the risers shall allow free vertical movement of the duct. Supports shall be attached only to structural framing members and concrete slabs. Supports shall not be anchored to metal decking unless a means is provided and approved for preventing the anchor from puncturing the metal decking. Where supports are required between structural framing members, suitable intermediate metal framing shall be provided. Where C-clamps are used, retainer clips shall be provided.

3.1.16 Fibrous Glass Ductwork

Installation shall be in accordance with the manufacturer's written recommendations unless otherwise required in NAIMA AH115. Duct supports for fibrous glass ductwork shall conform to NAIMA AH115. In those cases not covered in NAIMA AH115, the written recommendation of the fibrous duct manufacturer shall be followed.

3.1.17 Acoustical Duct Lining

Lining shall be applied in cut-to-size pieces attached to the interior of the duct with nonflammable, fire-resistant adhesive conforming to ASTM C 916, Type I, NFPA 90A, UL 723, and ASTM E 84. Top and bottom pieces shall lap the side pieces and shall be secured with welded pins, adhered clips of metal, nylon, or high impact plastic, and speed washers or welding cup-head pins installed in accordance with SMACNA-06. Welded pins, cup-head pins, or adhered clips shall not distort the duct, burn through, nor mar the finish or the surface of the duct. Pins and washers shall be flush with the surfaces of the duct liner and all breaks and punctures of the duct liner coating shall be sealed with the nonflammable, fire-resistand adhesive. Exposed edges of the liner at the duct ends and at other joints where the lining will be subject to erosion shall be coated with a heavy brush coat of the nonflammable, fire-resistant adhesive to prevent delamination of glass fibers. Duct liner may be applied to flat sheet metal prior to forming duct through the sheet metal brake. Lining at the top and bottom surfaces of the duct shall be additionally secured by welded pins or adhered clips as specified for cut-to-size pieces. Other methods indicated in SMACNA-06 to obtain proper installation of duct liners in sheet metal ducts, including adhesives and fasteners, will be acceptable.

3.1.18 Field Applied Insulation

Field applied insulation shall be as specified in Section 15080 THERMAL INSULATION FOR MECHANICAL SYSTEMS.

3.1.19 Factory Applied Insulation

Refrigerant suction lines between an evaporator and compressors and any cold gas inlet connections to gas cooled motors shall be insulated with not less than 19 mm (3/4 inch) thick unicellular plastic foam.

3.1.20 Framed Instructions

Framed instructions shall be framed under glass or laminated plastic and be posted where directed. Instructions shall include equipment layout, wiring and control diagrams, piping, valves and control sequences, and typed condensed operation instructions. The condensed operation instructions shall include preventative maintenance procedures, methods of checking the system for normal and safe operation, and procedures for safely starting and stopping the system. The instructions shall be posted before acceptance testing of the system.

3.2 TESTS

Tests shall be conducted in the presence of the Contracting Officer. Utilities for testing shall be provided as specified in the SPECIAL CONTRACT REQUIREMENTS. Water and electricity required for the tests will be furnished by the Government. Any material, equipment, instruments, and personnel required for the test shall be provided by the Contractor. The services of a qualified technician shall be provided as required to perform all tests and procedures indicated herein. Field tests shall be coordinated with Section 15990 TESTING, ADJUSTING, AND BALANCING OF HVAC SYSTEMS.

3.2.1 Refrigerant System

After all components of the refrigerant system have been installed and connected, the entire refrigeration system shall be subjected to a pneumatic test as described herein.

3.2.1.1 Preliminary Procedures

Prior to pneumatic testing, equipment which has been factory tested and refrigerant charged as well as equipment which could be damaged or cause personnel injury by imposed test pressure, positive or negative, shall be isolated from the test pressure or removed from the system. Safety relief valves and rupture discs, where not part of factory sealed systems, shall be removed and openings capped or plugged.

3.2.1.2 Pneumatic Test

Pressure control and excess pressure protection shall be provided at the source of test pressure. Valves shall be wide open, except those leading to the atmosphere. Test gas shall be dry nitrogen, with minus 55 degrees C (minus 70 degree F) dewpoint and less than 5 ppm oil. Test pressure shall be applied in two stages before any refrigerant pipe is insulated or covered. First stage test shall be at 69 kPa (10 psi) with every joint being tested with a thick soap or color indicating solution. Second stage tests shall raise the system to the minimum refrigerant leakage test pressure specified in ASHRAE 15 with a maximum test pressure 25 percent greater. Pressure above 690 KPa (100 psig) shall be raised in 10 percent increments with a pressure acclimatizing period between increments. The initial test pressure shall be recorded along with the ambient temperature to which the system is exposed. Final test pressures of the second stage shall be maintained on the system for a minimum of 24 hours. At the end of the 24 hour period, the system pressure will be recorded along with the ambient temperature to which the system is exposed. A correction factor of 2 kPa (0.3 psi) will be allowed for each degree C (F) change between test space initial and final ambient temperature, plus for increase and minus for a decrease. If the corrected system pressure is not exactly equal to the initial system test pressure, then the system shall be investigated for leaking joints. To repair leaks, the joint shall be taken apart,

thoroughly cleaned, and reconstructed as a new joint. Joints repaired by caulking, remelting, or back-welding/brazing shall not be acceptable. Following repair, the entire system shall be retested using the pnuematic tests described above. The entire system shall be reassemblied once the pneumatic tests are satisfactorily completed.

3.2.1.3 Evacuation Test

Following satisfactory completion of the pneumatic tests, the pressure shall be relieved and the entire system shall be evacuated to an absolute pressure of 300 micrometers. During evacuation of the system, the ambient temperature shall be higher than 2 degrees C. No more than one system shall be evacuated at one time by one vacuum pump. Once the desired vacuum has been reached, the vacuum line shall be closed and the system shall stand for 1 hour. If the pressure rises over 500 micrometers after the 1 hour period, then the system shall be evacuated again down to 300 micrometers and let set for another 1 hour period. The system shall not be charged until a vacuum of at least 500 micrometers is maintained for a period of 1 hour without the assistance of a vacuum line. If during the testing the pressure continues to rise, check the system for leaks, repair as required, and repeat the evacuation procedure. During evacuation, pressures shall be recorded by a thermocouple-type, electronic-type, or a calibrated-micrometer type gauge.

3.2.1.4 System Charging and Startup Test

Following satisfactory completion of the evacuation tests, the system shall be charged with the required amount of refrigerant by raising pressure to normal operating pressure and in accordance with manufacturer's procedures. Following charging, the system shall operate with high-side and low-side pressures and corresponding refrigerant temperatures, at design or improved values. The entire system shall be tested for leaks. Fluorocarbon systems shall be tested with halide torch or electronic leak detectors.

3.2.1.5 Refrigerant Leakage

If a refrigerant leak is discovered after the system has been charged, the leaking portion of the system shall immediately be isolated from the remainder of the system and the refrigerant pumped into the system receiver or other suitable container. Under no circumstances shall the refrigerant be discharged into the atmosphere.

3.2.1.6 Contractor's Responsibility

The Contractor shall, at all times during the installation and testing of the refrigeration system, take steps to prevent the release of refrigerants into the atmosphere. The steps shall include, but not be limited to, procedures which will minimize the release of refrigerants to the atmosphere and the use of refrigerant recovery devices to remove refrigerant from the system and store the refrigerant for reuse or reclaim. At no time shall more than 85 g (3 ounces) of refrigerant be released to the atmosphere in any one occurrence. Any system leaks within the first year shall be repaired in accordance with the requirements herein at no cost to the Government including material, labor, and refrigerant if the leak is the result of defective equipment, material, or installation.

3.2.2 Ductwork Leak Tests

Ductwork leak test shall be performed for the entire air distribution

system, including fans, coils, filters, etc. Test procedure, apparatus, and report shall conform to SMACNA-10. Ductwork leak test shall be completed with satisfactory results prior to applying insulation to ductwork exterior.

3.2.3 System Performance Tests

After the foregoing tests have been completed and before each refrigeration system is accepted, tests to demonstrate the general operating characteristics of all equipment shall be conducted by a registered professional engineer or an approved manufacturer's start-up representative experienced in system start-up and testing, at such times as directed. Tests shall cover a period of not less than 48 hours for each system and demonstrate that the entire system is functioning in accordance with the drawings and specifications. Corrections and adjustments shall be made as necessary and tests shall be re-conducted to demonstrate that the entire system is functioning as specified. Prior to acceptance, service valve seal caps and blanks over gauge points shall be installed and tightened. Any refrigerant lost during the system startup shall be replaced. If tests do not demonstrate satisfactory system performance, deficiencies shall be corrected and the system shall be retested.

3.3 INSPECTIONS

At the conclusion of the one year period, cooling towers and condensers shall be inspected for problems due to corrosion, scale, and biological growth. If the cooling tower and condenser are found not to conform to the manufacturers recommended conditions, assuming the water treatment company recommendations have been followed; the water treatment company shall provide all chemicals and labor for cleaning or repairing the equipment as required by the manufacturer's recommendations.

3.4 CLEANING AND ADJUSTING

3.4.1 Piping

Prior to testing, pipes shall be cleaned free of scale and thoroughly flushed of all foreign matter. A temporary bypass shall be provided for water coils to prevent flushing water from passing through coils. Strainers and valves shall be thoroughly cleaned. Prior to testing and balancing, air shall be removed from each water system through the use of the air vents. Temporary measures, such as piping the overflow from vents to a collecting vessel shall be taken to avoid water damage during the venting process. Air vents shall be plugged or capped after the system has been vented.

3.4.2 Ductwork

Prior to testing, inside of ducts, plenums, and casing shall be thoroughly cleaned of all debris and blown free of small particles of rubbish and dust and then vacuum cleaned before installing outlet faces. Temporary filters shall be provided for fans that are operated during construction. New filters shall be installed after all construction dirt has been removed from the building and the ducts, plenum, casings, and other items specified have been vacuum cleaned. Fans shall be adjusted to the speed indicated by the manufacturer to meet specified conditions.

3.4.3 Equipment

Equipment shall be wiped clean, with all traces of oil, dust, dirt, or paint spots removed. System shall be maintained in this clean condition until final acceptance. Bearings shall be lubricated with oil or grease as recommended by the manufacturer. Belts shall be tightened to proper tension. Control valves and other miscellaneous equipment requiring adjustment shall be adjusted to setting indicated or directed.

3.4.4 Testing, Adjusting, and Balancing

Testing, adjusting, and balancing shall be as specified in Section 15990 TESTING, ADJUSTING AND BALANCING OF HVAC SYSTEMS.

3.5 DEMONSTRATIONS

Contractor shall conduct a training course for the operating staff as designated by the Contracting Officer. The training period shall consist of a total 8 hours of normal working time and start after the system is functionally completed but prior to final acceptance tests. The field instructions shall cover all of the items contained in the operation and maintenance manuals as well as demonstrations of routine maintenance operations.

-- End of Section --

SECTION 15895

AIR SUPPLY, DISTRIBUTION, VENTILATION, AND EXHAUST SYSTEM

PART 1 GENERAL

1.1 REFERENCES

The publications listed below form a part of this specification to the extent referenced. The publications are referred to in the text by basic designation only.

AIR CONDITIONING AND REFRIGERATION INSTITUTE (ARI)

ARI 410	(1991) Forced-Circulation Air-Cooling and Air-Heating Coils
ARI 430	(1989) Central-Station Air-Handling Units
ARI 880	(1990) Air Terminals
ARI Guideline D	(1987) Application and Installation of Central Station Air-Handling Units

AIR MOVEMENT AND CONTROL ASSOCIATION (AMCA)

AMCA 210	(1985) Laboratory Methods of Testing Fans for Rating
AMCA 300	(1996) Reverberant Room Method for Sound Testing of Fans

AMERICAN BEARING MANUFACTURERS ASSOCIATION (ABEMA)

ABEMA 9	(1990) Load Ratings and Fatigue Life for Ball Bearings
ABEMA 11	(1990) Load Ratings and Fatigue Life for Roller Bearings

AMERICAN SOCIETY FOR TESTING AND MATERIALS (ASTM)

ASTM A 47	(1990) Ferritic Malleable Iron Castings
ASTM A 53	(1993a) Pipe, Steel, Black and Hot-Dipped, Zinc-Coated Welded and Seamless
ASTM A 106	(1994) Seamless Carbon Steel Pipe for High-Temperature Service
ASTM A 123	(1989a) Zinc (Hot-Dip Galvanized) Coatings on Iron and Steel Products
ASTM A 167	(1993) Stainless and Heat-Resisting Chromium-Nickel Steel Plate, Sheet, and Strip

ASTM A 181	(1995b) Forgings, Carbon Steel, for General-Purpose Piping
ASTM A 183	(1983; R 1990) Carbon Steel Track Bolts and Nuts
ASTM A 193	(1996) Alloy-Steel and Stainless Steel Bolting Materials for High-Temperature Service
ASTM A 234	(1996) Piping Fittings of Wrought Carbon Steel and Alloy Steel for Moderate and Elevated Temperatures
ASTM A 536	(1984; R 1993) Ductile Iron Castings
ASTM A 733	(1993) Welded and Seamless Carbon Steel and Austenitic Stainless Steel Pipe Nipples
ASTM A 924	(1994) General Requirements for Steel Sheet, Metallic-Coated by the Hot-Dip Process
ASTM B 62	(1993) Composition Bronze or Ounce Metal Castings
ASTM B 75	(1993) Seamless Copper Tube
ASTM B 88	(1993a) Seamless Copper Water Tube
ASTM B 117	(1994) Operating Salt Spray (Fog) Testing Apparatus
ASTM C 916	(1985; R 1990) Adhesives for Duct Thermal Insulation
ASTM C 1071	(1991) Thermal and Acoustical Insulation (Glass Fiber, Duct Lining Material)
ASTM D 520	(1984; R 1989) Zinc Dust Pigment
ASTM D 1654	(1992) Evaluation of Painted or Coated Specimens Subjected to Corrosive Environments
ASTM D 2000	(1990 R 1994) Rubber Products in Automotive Applications
ASTM D 3359	(1995) Measuring Adhesion by Tape Test
ASTM E 84	(1994) Surface Burning Characteristics of Building Materials
ASTM E 437	(1992) Industrial Wire Cloth and Screens (Square Opening Series)

AMERICAN SOCIETY OF HEATING, REFRIGERATING AND AIR-CONDITIONING ENGINEERS (ASHRAE)

ASHRAE 52.1	(1992) Gravimetric and Dust-Spot Procedures for Testing Air-Cleaning Devices Used in General Ventilation for Removing Particulate Matter
ASHRAE 68	(1986) Laboratory Method of Testing In-Duct Sound Power Measurement Procedures for Fans
ASHRAE 70	(1991) Method of Testing Rating the Performance of Air Outlets and Inlets

AMERICAN SOCIETY OF MECHANICAL ENGINEERS (ASME)

ASME B1.20.1	(1983; R 1992) Pipe Threads, General Purpose (Inch)
ASME B16.3	(1992) Malleable Iron Threaded Fittings
ASME B16.5	(1988; Errata Oct 88; B16.5a) Pipe Flanges and Flanged Fittings
ASME B16.9	(1993) Factory-Made Wrought Steel Buttwelding Fittings
ASME B16.11	(1991) Forged Fittings, Socket-Welding and Threaded
ASME B16.18	(1984; R 1994) Cast Copper Alloy Solder Joint Pressure Fittings
ASME B16.21	(1992) Nonmetallic Flat Gaskets for Pipe Flanges
ASME B16.22	(1989) Wrought Copper and Copper Alloy Solder Joint Pressure Fittings
ASME B16.26	(1988) Cast Copper Alloy Fittings for Flared Copper Tubes
ASME B16.39	(1986; R 1994) Malleable Iron Threaded Pipe Unions Classes 150, 250, and 300
ASME B31.1	(1995) Power Piping
ASME B40.1	(1991) Gauges - Pressure Indicating Dial Type - Elastic Element
ASME BPV IX	(1995; Addenda Dec 1995) Boiler and Pressure Vessel Code; Section IX, Welding and Brazing Qualifications

AMERICAN WATER WORKS ASSOCIATION (AWWA)

AWWA C606	(1987) Grooved and Shouldered Joints

AMERICAN WELDING SOCIETY (AWS)

AWS D1.1	(1994) Structural Welding Code - Steel

MANUFACTURERS STANDARDIZATION SOCIETY OF THE VALVE AND FITTINGS INDUSTRY (MSS)

MSS SP-25	(1993) Standard Marking System for Valves, Fittings, Flanges and Unions
MSS SP-58	(1993) Pipe Hangers and Supports - Materials, Design and Manufacture
MSS SP-69	(1991) Pipe Hangers and Supports - Selection and Application
MSS SP-70	(1990) Cast Iron Gate Valves, Flanged and Threaded Ends
MSS SP-71	(1990) Cast Iron Swing Check Valves, Flanged and Threaded Ends
MSS SP-72	(1992) Ball Valves with Flanged or Butt-Welding Ends for General Service
MSS SP-80	(1987) Bronze Gate, Globe, Angle and Check Valves
MSS SP-85	(1994) Cast Iron Globe & Angle Valves, Flanged and Threaded Ends
MSS SP-110	(1991) Ball Valves Threaded, Socket-Welding, Solder Joint, Grooved and Flared Ends

NATIONAL ELECTRICAL MANUFACTURERS ASSOCIATION (NEMA)

NEMA MG 1	(1993; Rev 1; Rev 2) Motors and Generators

NATIONAL FIRE PROTECTION ASSOCIATION (NFPA)

NFPA 90A	(1993) Installation of Air Conditioning and Ventilating Systems

NORTH AMERICAN INSULATION MANUFACTURERS ASSOCIATION (NAIMA)

NAIMA-01	(1993) Fibrous Glass Duct Construction Standards

SHEET METAL AND AIR CONDITIONING CONTRACTORS' NATIONAL ASSOCIATION (SMACNA)

SMACNA-05	(1992) Fire, Smoke and Radiation Damper Installation Guide for HVAC Systems
SMACNA-06	(1995) HVAC Duct Construction Standards - Metal and Flexible
SMACNA-10	(1985) HVAC Air Duct Leakage Test Manual

UNDERWRITERS LABORATORIES (UL)

UL-01	(1996; Supple) Building Materials Directory
UL-03	(1996; Supple) Electrical Construction Materials Directory
UL-05	(1996; Supple) Fire Resistance Directory (3 Vol.)
UL 181	(1996; Rev Oct 1996) Factory-Made Air Ducts and Air Connectors
UL 214	(1993) Tests for Flame-Propagation of Fabrics and Films
UL 555	(1995) Fire Dampers
UL 586	(1996) High-Efficiency, Particulate, Air Filter Units
UL 723	(1993; Rev Apr 1994) Test for Surface Burning Characteristics of Building Materials
UL 900	(1994) Test Performance of Air Filter Units

1.2 COORDINATION OF TRADES Ductwork, piping offsets, fittings, and accessories shall be furnished as required to provide a complete installation and to eliminate interference with other construction.

1.3 DELIVERY AND STORAGE

Equipment delivered and placed in storage shall be stored with protection from the weather, humidity and temperature variations, dirt and dust, or other contaminants.

1.4 SUBMITTALS

Government approval is required for submittals with a "GA" designation; submittals having an "FIO" designation are for information only. The following shall be submitted in accordance with Section 01330 SUBMITTAL PROCEDURES:

SD-01 Data

Components and Equipment Data; GA|ED.

Manufacturer's catalog data shall be included with the detail drawings for the following items. The data shall be highlighted to show model, size, options, etc., that are intended for consideration. Data shall be adequate to demonstrate compliance with contract requirements for the following:

a. Piping Components

b. Ductwork Components

c. Air Systems Equipment

d. Air Handling Units

e. Energy Recovery Devices

f. Terminal Units

SD-04 Drawings

Air Supply, Distribution, Ventilation, and Exhaust Equipment; GA|ED.

Drawings shall consist of equipment layout including assembly and installation details and electrical connection diagrams; ductwork layout showing the location of all supports and hangers, typical hanger details, gauge reinforcement, reinforcement spacing rigidity classification, and static pressure and seal classifications; and piping layout showing the location of all guides and anchors, the load imposed on each support or anchor, and typical support details. Drawings shall include any information required to demonstrate that the system has been coordinated and will properly function as a unit and shall show equipment relationship to other parts of the work, including clearances required for operation and maintenance.

SD-06 Instructions

Test Procedures; FIO;AR.

Proposed test procedures for piping hydrostatic test, ductwork leak test, and performance tests of systems, at least 2 weeks prior to the start of related testing.

Welding Procedures; FIO;AR.

A copy of qualified welding procedures, at least 2 weeks prior to the start of welding operations.

System Diagrams; GA|ED.

Proposed diagrams, at least 2 weeks prior to start of related testing. System diagrams that show the layout of equipment, piping, and ductwork, and typed condensed operation manuals explaining preventative maintenance procedures, methods of checking the system for normal, safe operation, and procedures for safely starting and stopping the system shall be framed under glass or laminated plastic. After approval, these items shall be posted where directed.

SD-07 Schedules

Test Schedules; FIO;AR.

Proposed test schedules for hydrostatic test of piping, ductwork leak test, and performance tests, at least 2 weeks prior to the start of related testing.

Field Training Schedule; FIO;AR.

Proposed schedule for field training, at least 2 weeks prior to the start of related training.

SD-08 Statements

Similar Services; FIO;AR.

Statement demonstrating successful completion of similar services on at least 5 projects of similar size and scope, at least 2 weeks prior to submittal of other items required by this section.

Welding Qualification; FIO;AR.

A list of names and identification symbols of qualified welders and welding operators, at least 2 weeks prior to the start of welding operations.

SD-09 Reports

Test Reports; FIO;AR.

Test reports for the piping hydrostatic test, ductwork leak test, and performance tests in booklet form, upon completion of testing. Reports shall document phases of tests performed including initial test summary, repairs/adjustments made, and final test results.

SD-13 Certificates

Bolts; FIO;AR.

Written certification from the bolt manufacturer that the bolts furnished comply with the requirements of this specification. The certification shall include illustrations of product markings, and the number of each type of bolt to be furnished.

SD-19 Operation and Maintenance Manuals

Air Supply, Distribution, Ventilation, and Exhaust Manuals; FIO;AR.

Six manuals listing step-by-step procedures required for system startup, operation, shutdown, and routine maintenance, at least 2 weeks prior to field training. The manuals shall include the manufacturer's name, model number, parts list, list of parts and tools that should be kept in stock by the owner for routine maintenance including the name of a local supplier, simplified wiring and controls diagrams, troubleshooting guide, and recommended service organization (including address and telephone number) for each item of equipment. Each service organization submitted shall be capable of providing 4 hour onsite response to a service call on an emergency basis.

PART 2 PRODUCTS

2.1 STANDARD PRODUCTS

Components and equipment shall be standard products of a manufacturer regularly engaged in the manufacturing of products that are of a similar material, design and workmanship. The standard products shall have been in satisfactory commercial or industrial use for 2 years before bid opening. The 2-year experience shall include applications of components and equipment under similar circumstances and of similar size. The 2 years must be satisfactorily completed by a product which has been sold or is offered for sale on the commercial market through advertisements, manufacturers' catalogs, or brochures. Products having less than a 2-year field service record will be acceptable if a certified record of

satisfactory field operation, for not less than 6000 hours exclusive of the manufacturer's factory tests, can be shown. The equipment items shall be supported by a service organization.

2.2 ASBESTOS PROHIBITION

Asbestos and asbestos-containing products shall not be used.

2.3 NAMEPLATES

Equipment shall have a nameplate that identifies the manufacturer's name, address, type or style, model or serial number, and catalog number.

2.4 EQUIPMENT GUARDS AND ACCESS

Belts, pulleys, chains, gears, couplings, projecting setscrews, keys, and other rotating parts exposed to personnel contact shall be fully enclosed or guarded according to OSHA requirements. High temperature equipment and piping exposed to contact by personnel or where it creates a potential fire hazard shall be properly guarded or covered with insulation of a type specified.

2.5 PIPING COMPONENTS

2.5.1 Steel Pipe

Steel pipe shall conform to ASTM A 53, Schedule 40, Grade A or B, Type E or S.

2.5.2 Joints and Fittings For Steel Pipe

Joints shall be welded, flanged, threaded, or grooved as indicated. If not otherwise indicated, piping 25 mm (1 inch) and smaller shall be threaded; piping larger than 25 mm (1 inch) and smaller than 80 mm (3 inches) shall be either threaded, grooved, or welded; and piping 80 mm (3 inches) and larger shall be grooved, welded, or flanged. Rigid grooved mechanical joints and fittings may only be used in serviceable aboveground locations where the temperature of the circulating medium does not exceed 110 degrees C. Flexible grooved joints shall be used only as a flexible connector with grooved pipe system. Unless otherwise specified, grooved piping components shall meet the corresponding criteria specified for the similar welded, flanged, or threaded component specified herein. The manufacturer of each fitting shall be permanently identified on the body of the fitting according to MSS SP-25.

2.5.2.1 Welded Joints and Fittings

Welded fittings shall conform to ASTM A 234, and shall be identified with the appropriate grade and marking symbol. Butt-welded fittings shall conform to ASME B16.9. Socket-welded fittings shall conform to ASME B16.11.

2.5.2.2 Flanged Joints and Fittings

Flanges shall conform to ASTM A 181 and ASME B16.5, Class 150. Gaskets shall be nonasbestos compressed material according to ASME B16.21, 2.0 mm thickness, full face or self-centering flat ring type. The gaskets shall contain aramid fibers bonded with styrene butadiene rubber (SBR) or nitrile butadiene rubber (NBR). Bolts, nuts, and bolt patterns shall conform to ASME B16.5. Bolts shall be high or intermediate strength material

conforming to ASTM A 193.

2.5.2.3 Threaded Joints and Fittings

Threads shall conform to ASME B1.20.1. Unions shall conform to ASME B16.39, Class 150. Nipples shall conform to ASTM A 733. Malleable iron fittings shall conform to ASME B16.3, type as required to match piping.

2.5.2.4 Dielectric Unions and Flanges

Dielectric unions shall have the tensile strength and dimensional requirements specified. Unions shall have metal connections on both ends threaded to match adjacent piping. Metal parts of dielectric unions shall be separated with a nylon insulator to prevent current flow between dissimilar metals. Unions shall be suitable for the required operating pressures and temperatures. Dielectric flanges shall provide the same pressure ratings as standard flanges and provide complete electrical isolation.

2.5.2.5 Grooved Mechanical Joints and Fittings

Joints and fittings shall be designed for not less than 862 kPa (125 psig) service and shall be the product of the same manufacturer. Fitting and coupling houses shall be malleable iron conforming to ASTM A 47, Grade 32510; ductile iron conforming to ASTM A 536, Grade 65-45-12; or steel conforming to ASTM A 106, Grade B or ASTM A 53. Gaskets shall be molded synthetic rubber with central cavity, pressure responsive configuration and shall conform to ASTM D 2000 Grade No. 2CA615A15B44F17Z for circulating medium up to 110 degrees C or Grade No. M3BA610A15B44Z for circulating medium up to 93 degrees C. Grooved joints shall conform to AWWA C606. Coupling nuts and bolts shall be steel and shall conform to ASTM A 183.

2.5.3 Copper Tube

Copper tube shall conform to ASTM B 88, Type K or L.

2.5.4 Joints and Fittings For Copper Tube

Wrought copper and bronze solder-joint pressure fittings shall conform to ASME B16.22 and ASTM B 75. Cast copper alloy solder-joint pressure fittings shall conform to ASME B16.18. Cast copper alloy fittings for flared copper tube shall conform to ASME B16.26 and ASTM B 62. Brass or bronze adapters for brazed tubing may be used for connecting tubing to flanges and to threaded ends of valves and equipment. Extracted brazed tee joints produced with an acceptable tool and installed as recommended by the manufacturer may be used.

2.5.5 Valves

Valves shall be Class 125 and shall be suitable for the intended application. Valves shall meet the material, fabrication and operating requirements of ASME B31.1. Chain operators shall be provided for valves located 3 meters or higher above the floor. Valves in sizes larger than 25 mm (1 inch) and used on steel pipe systems, may be provided with rigid grooved mechanical joint ends. Such grooved end valves shall be subject to the same requirements as rigid grooved mechanical joints and fittings and, shall be provided by the same manufacturer as the grooved pipe joint and fitting system. All valves in insulated lines shall have extended neck to accomodate insulation thickness.

2.5.5.1 Gate Valves

Gate valves 65 mm (2-1/2 inches) and smaller shall conform to MSS SP-80 and shall be bronze with rising stem and threaded, solder, or flanged ends. Gate valves 80 mm (3 inches) and larger shall conform to MSS SP-70 and shall be cast iron with bronze trim, outside screw and yoke, and flanged or threaded ends.

2.5.5.2 Globe Valves

Globe valves 65 mm (2-1/2 inches) and smaller shall conform to MSS SP-80, bronze, threaded, soldered, or flanged ends. Globe valves 80 mm (3 inches) and larger shall conform to MSS SP-85 and shall be cast iron with bronze trim and flanged, or threaded ends.

2.5.5.3 Check Valves

Check valves 65 mm (2-1/2 inches) and smaller shall conform to MSS SP-80 and shall be bronze with threaded, soldered, or flanged ends. Check valves 80 mm (3 inches) and larger shall conform to MSS SP-71 and shall be cast iron with bronze trim and flanged or threaded ends.

2.5.5.4 Angle Valves

Angle valves 65 mm (2-1/2 inches) and smaller shall conform to MSS SP-80 and shall be bronze with threaded, soldered, or flanged ends. Angle valves 80 mm (3 inches) and larger shall conform to MSS SP-85 and shall be cast iron with bronze trim and flanged, or threaded ends.

2.5.5.5 Ball Valves

Ball valves 15 mm (1/2 inch) and larger shall conform to MSS SP-72 or MSS SP-110, and shall be ductile iron or bronze with threaded, soldered, or flanged ends.

2.5.5.6 Butterfly Valves

Butterfly valves shall be 2 flange or lug wafer type, and shall be bubble-tight at 1.03 MPa. Valve bodies shall be cast iron, malleable iron, or steel. ASTM A 167, Type 404 or Type 316, corrosion resisting steel stems, bronze or corrosion resisting steel discs, and synthetic rubber seats shall be provided. Valves smaller than 200 mm (8 inches) shall have throttling handles with a minimum of seven locking positions. Valves 200 mm (8 inches) and larger shall have totally enclosed manual gear operators with adjustable balance return stops and position indicators. Valves in insulated lines shall have extended neck to accommodate insulation thickness.

2.5.5.7 Balancing Valves

Balancing valves 50 mm (2 inches) or smaller shall be bronze with NPT connections for black steel pipe and brazed connections for copper tubing. Valves 25 mm or larger may be all iron with threaded or flanged ends. The valves shall have a square head or similar device and an indicator arc and shall be designed for 120 degrees C. Iron valves shall be lubricated, nonlubricated, or tetrafluoroethylene resin-coated plug valves. In lieu of plug valves, ball valves may be used. Plug valves and ball valves 200 mm (8 inches) or larger shall be provided with manual gear operators with

position indicators. In lieu of balancing valves specified, automatic flow control valves may be provided to maintain constant flow, and shall be designed to be sensitive to pressure differential across the valve to provide the required opening. Valves shall be selected for the flow required and provided with a permanent nameplate or tag carrying a permanent record of the factory-determined flow rate and flow control pressure levels. Valves shall control the flow within 5 percent of the tag rating. Valves shall be suitable for the maximum operating pressure of 862 kPa (125 psig) or 150 percent of the system operating pressure, whichever is the greater. Where the available system pressure is not adequate to provide the minimum pressure differential that still allows flow control, the system pump head capability shall be appropriately increased. Where flow readings are provided by remote or portable meters, valve bodies shall be provided with tapped openings and pipe extensions with shutoff valves outside of pipe insulation. The pipe extensions shall be provided with quick connecting hose fittings for a portable meter to measure the pressure differential across the automatic flow control valve. A portable meter furnished with accessory kit as recommended by the automatic valve manufacturer shall be provided. Automatic flow control valve specified may be substituted for venturi tubes or orifice plate flow measuring devices.

2.5.5.8 Air Vents

Manual air vents shall be brass or bronze valves or cocks suitable for pressure rating of piping system and furnished with threaded plugs or caps. Automatic air vents shall be float type, cast iron, stainless steel, or forged steel construction, suitable for pressure rating of piping system.

2.5.6 Chilled Water System Accessories

Chilled water system accessories such as pumps, combination strainer and suction diffusers, and expansion tanks shall be as specified in Section 15650 CENTRAL REFRIGERATED AIR CONDITIONING SYSTEM.

2.5.7 Water Heating System Accessories

Water heating accessories such as expansion tanks shall be as specified in Section 15569 WATER HEATING; GAS ; UP TO 20 MBTUH.

2.5.8 Backflow Preventers

Backflow preventers shall be according to Section 15400 PLUMBING, GENERAL PURPOSE.

2.5.9 Flexible Pipe Connectors

Flexible pipe connectors shall be designed for 862 kPa (125 psi) or 1034 kPa (150 psi) service as appropriate for the static head plus the system head, and 120 degrees C, 110 degrees C for grooved end flexible connectors. The flexible section shall be constructed of rubber, tetrafluoroethylene resin, or corrosion-resisting steel, bronze, monel, or galvanized steel. The flexible section shall be suitable for intended service with end connections to match adjacent piping. Flanged assemblies shall be equipped with limit bolts to restrict maximum travel to the manufacturer's standard limits. Unless otherwise indicated, the length of the flexible connectors shall be as recommended by the manufacturer for the service intended. Internal sleeves or liners, compatible with circulating medium, shall be provided when recommended by the manufacturer. Covers to protect the bellows shall be provided where indicated.

2.5.10 Pressure Gauges

Gauges shall conform to ASME B40.1 and shall be provided with throttling type needle valve or a pulsation dampener and shut-off valve. Gauge shall be a minimum of 85 mm in diameter and shall have a range from 0 kPa to approximately 1.5 times the maximum system working pressure.

2.5.11 Thermometers

Thermometers shall have brass, malleable iron, or aluminum alloy case and frame, clear protective face, permanently stabilized glass tube with indicating-fluid column, white face, black numbers, and a 225 mm (9 inch) scale, and shall have rigid stems with straight, angular, or inclined pattern.

2.5.12 Escutcheons

Escutcheons shall be chromium-plated iron or chromium-plated brass, either one piece or split pattern, held in place by internal spring tension or setscrews.

2.5.13 Pipe Hangers, Inserts, and Supports

Pipe hangers, inserts, and supports shall conform to MSS SP-58 and MSS SP-69.

2.5.14 Insulation

Shop and field applied insulation shall be as specified in Section 15080 THERMAL INSULATION FOR MECHANICAL SYSTEMS.

2.5.15 Condensate Drain Lines

Condensate drainage shall be provided for each item of equipment that generates condensate as specified for drain, waste, and vent piping systems in Section 15400 PLUMBING, GENERAL PURPOSE.

2.6 ELECTRICAL WORK

Electrical motor-driven equipment specified shall be provided complete with motor, motor starter, and controls. Unless otherwise specified, electric equipment, including wiring and motor efficiencies, shall be according to Section 16415 ELECTRICAL WORK, INTERIOR. Electrical characteristics and enclosure type shall be as shown. Unless otherwise indicated, motors of 745 W and above shall be high efficiency type. Motor starters shall be provided complete with thermal overload protection and other appurtenances necessary. Each motor shall be according to NEMA MG 1 and shall be of sufficient size to drive the equipment at the specified capacity without exceeding the nameplate rating of the motor. Manual or automatic control and protective or signal devices required for the operation specified, and any control wiring required for controls and devices, but not shown, shall be provided. Where two-speed or variable-speed motors are indicated, solid-state variable-speed controller may be provided to accomplish the same function. Solid-state variable-speed controllers shall be utilized for motors rated 7.45 kW (10 hp) or less. Adjustable frequency drives shall be used for larger motors.

2.7 CONTROLS

Controls shall be provided as specified in Section 15950 HEATING, VENTILATING AND AIR CONDITIONING (HVAC) CONTROL SYSTEMS.

2.8 DUCTWORK COMPONENTS

2.8.1 Metal Ductwork

All aspects of metal ductwork construction, including all fittings and components, shall comply with SMACNA-06 unless otherwise specified. Elbows shall be radius type with a centerline radius of 1-1/2 times the width or diameter of the duct where space permits. Otherwise, elbows having a minimum radius equal to the width or diameter of the duct or square elbows with factory fabricated turning vanes may be used. Static pressure Class 125, 250, and 500 Pa (1/2, 1, and 2 inch w.g.) ductwork shall meet the requirements of Seal Class C. Class 750 through 2500 Pa (3 through 10 inch) shall meet the requirements of Seal Class A. Sealants shall conform to fire hazard classification specified in Section 15080 THERMAL INSULATION FOR MECHANICAL SYSTEMS. Pressure sensitive tape shall not be used as a sealant. Spiral lock seam duct, and flat oval shall be made with duct sealant and locked with not less than 3 equally spaced drive screws or other approved methods indicated in SMACNA-06. The sealant shall be applied to the exposed male part of the fitting collar so that the sealer will be on the inside of the joint and fully protected by the metal of the duct fitting. One brush coat of the sealant shall be applied over the outside of the joint to at least 50 mm band width covering all screw heads and joint gap. Dents in the male portion of the slip fitting collar will not be acceptable. Outdoor air intake ducts and plenums shall be fabricated with watertight soldered or brazed joints and seams.

2.8.1.1 Transitions

Diverging air flow transitions shall be made with each side pitched out a maximum of 15 degrees, for an included angle of 30 degrees. Transitions for converging air flow shall be made with each side pitched in a maximum of 30 degrees, for an included angle of 60 degrees, or shall be as indicated. Factory-fabricated reducing fittings for systems using round duct sections when formed to the shape of the ASME short flow nozzle, need not comply with the maximum angles specified.

2.8.1.2 Insulated Nonmetallic Flexible Duct Runouts

Flexible duct runouts shall be used only where indicated. Runout length shall be as shown on the drawings, but shall in no case exceed 3 m. Runouts shall be preinsulated, factory fabricated, and shall comply with NFPA 90A and UL 181. Either field or factory applied vapor barrier shall be provided. Where coil induction or high velocity units are supplied with vertical air inlets, a streamlined and vaned and mitered elbow transition piece shall be provided for connection to the flexible duct or hose. The last elbow to these units, other than the vertical air inlet type, shall be a die-stamped elbow and not a flexible connector. Insulated flexible connectors may be used as runouts. The insulated material and vapor barrier shall conform to the requirements of Section 15080 THERMAL INSULATION FOR MECHANICAL SYSTEMS. The insulation material surface shall not be exposed to the air stream.

2.8.1.3 General Service Duct Connectors

A flexible duct connector approximately 150 mm in width shall be provided where sheet metal connections are made to fans or where ducts of dissimilar

metals are connected. For round/oval ducts, the flexible material shall be secured by stainless steel or zinc-coated, iron clinch-type draw bands. For rectangular ducts, the flexible material locked to metal collars shall be installed using normal duct construction methods. The composite connector system shall comply with UL 214 and be classified as "flame-retarded fabrics" in UL-01.

2.8.2 Fibrous Glass Ductwork

Fibrous glass ductwork may be provided in lieu of sheet metal ductwork except that fibrous glass ductwork will not be allowed in fan and equipment rooms, where subject to traffic or weather damage, for outside air intakes, for risers of more than two stories, in kitchen or fume exhaust ducts, to convey solids or corrosive gases, in concrete, for burial below grade, as casings or housings, or in systems used for life support systems. Fibrous glass ductwork, including all components, shall be fabricated according to NAIMA-01 where the velocity and the static pressure are within its scope. Where the velocity or static pressure exceeds these limits, the ductwork manufacturer shall certify that the ductwork is intended for the velocities and pressures to be encountered, and that the proposed installation meets all performance criteria specified herein for metal ductwork. Fibrous glass ductwork shall have the thermal equivalent of the insulation specified for metal ductwork in Section 15080 THERMAL INSULATION FOR MECHANICAL SYSTEMS. Field or factory fabricated fibrous glass ductwork shall conform to UL 181, Class 1. Duct wall penetrations, transverse joints and longitudinal seams shall be sealed as instructed by the manufacturer by one of the methods prescribed by NAIMA-01, where applicable, except that pressure sensitive tape shall not be used as a sealant. All items necessary for a complete installation shall be provided as specified for sheet metal duct systems.

2.8.3 Ductwork Accessories

2.8.3.1 Duct Access Doors

Access doors shall be provided in ductwork and plenums where indicated and at all air flow measuring primaries, automatic dampers, fire dampers, coils, thermostats, and other apparatus requiring service and inspection in the duct system, and unless otherwise shown, shall conform to SMACNA-06. Access doors shall be provided upstream and downstream of air flow measuring primaries and heating and cooling coils. Doors shall be minimum 375 x 450 mm, unless otherwise shown. Where duct size will not accommodate this size door, the doors shall be made as large as practicable. Doors 600 x 600 mm or larger shall be provided with fasteners operable from both sides. Doors in insulated ducts shall be the insulated type.

2.8.3.2 Fire Dampers

Fire dampers shall be 1-1/2 hour fire rated unless otherwise indicated. Fire dampers shall conform to the requirements of NFPA 90A and UL 555. Fire dampers shall be automatic operating type and shall have a dynamic rating suitable for the maximum air velocity and pressure differential to which it will be subjected. Fire dampers shall be approved for the specific application, and shall be installed according to their listing. Fire dampers shall be equipped with a steel sleeve or adequately sized frame installed in such a manner that disruption of the attached ductwork, if any, will not impair the operation of the damper. Sleeves or frames shall be equipped with perimeter mounting angles attached on both sides of

the wall or floor opening. Ductwork in fire-rated floor-ceiling or roof-ceiling assembly systems with air ducts that pierce the ceiling of the assemblies shall be constructed in conformance with UL-05. Fire dampers shall be curtain type with damper blades out of the air stream. Dampers shall not reduce the duct or the air transfer opening cross-sectional area. Dampers shall be installed so that the centerline of the damper depth or thickness is located in the centerline of the wall, partition or floor slab depth or thickness. Unless otherwise indicated, the installation details given in SMACNA-05 and in manufacturer's instructions for fire dampers shall be followed.

2.8.3.3 Splitters and Manual Balancing Dampers

Splitters and manual balancing dampers shall be furnished with accessible operating mechanisms. Where operators occur in finished portions of the building, operators shall be chromium plated with all exposed edges rounded. Splitters shall be operated by quadrant operators or 5 mm (3/16 inch) rod brought through the side of the duct with locking setscrew and bushing. Two rods are required on splitters over 200 mm (8 inches). Manual volume control dampers shall be operated by locking-type quadrant operators. Dampers and splitters shall be 2 gauges heavier than the duct in which installed. Unless otherwise indicated, multileaf dampers shall be opposed blade type with maximum blade width of 300 mm. Access doors or panels shall be provided for all concealed damper operators and locking setscrews. Unless otherwise indicated, the locking-type quadrant operators for dampers, when installed on ducts to be thermally insulated, shall be provided with stand-off mounting brackets, bases, or adapters to provide clearance between the duct surface and the operator not less than the thickness of the insulation. Stand-off mounting items shall be integral with the operator or standard accessory of the damper manufacturer. Volume dampers shall be provided where indicated.

2.8.3.4 Air Deflectors and Branch Connections

Air deflectors shall be provided at duct mounted supply outlets, at takeoff or extension collars to supply outlets, at duct branch takeoff connections, and at 90 degree elbows, as well as at locations as indicated on the drawings or otherwise specified. Conical branch connections or 45 degree entry connections may be used in lieu of deflectors or extractors for branch connections. All air deflectors, except those installed in 90 degree elbows, shall be provided with an approved means of adjustment. Adjustment shall be made from easily accessible means inside the duct or from an adjustment with sturdy lock on the face of the duct. When installed on ducts to be thermally insulated, external adjustments shall be provided with stand-off mounting brackets, integral with the adjustment device, to provide clearance between the duct surface and the adjustment device not less than the thickness of the thermal insulation. Air deflectors shall be factory-fabricated units consisting of curved turning vanes or louver blades designed to provide uniform air distribution and change of direction with minimum turbulence or pressure loss. Air deflectors shall be factory or field assembled. Blade air deflectors, also called blade air extractors, shall be approved factory fabricated units consisting of equalizing grid and adjustable blade and lock. Adjustment shall be easily made from the face of the diffuser or by position adjustment and lock external to the duct. Stand-off brackets shall be provided on insulated ducts and are described herein. Fixed air deflectors, also called turning vanes, shall be provided in 90 degree elbows.

2.8.4 Duct Sleeves, Framed Prepared Openings, Closure Collars

2.8.4.1 Duct Sleeves

Duct sleeves shall be provided for round ducts 375 mm in diameter or less passing through floors, walls, ceilings, or roof, and installed during construction of the floor, wall, ceiling, or roof. Round ducts larger than 375 mm in diameter and square, rectangular, and oval ducts passing through floors, walls, ceilings, or roof shall be installed through framed prepared openings. The Contractor shall be responsible for the proper size and location of sleeves and prepared openings. Sleeves and framed openings are also required where grilles, registers, and diffusers are installed at the openings. Framed prepared openings shall be fabricated from 1.0 mm (20 gauge) galvanized steel, unless otherwise indicated. Where sleeves are installed in bearing walls or partitions, black steel pipe, ASTM A 53, Schedule 20 shall be used. Sleeve shall provide 25 mm clearance between the duct and the sleeve or 25 mm clearance between the insulation and the sleeve for insulated ducts.

2.8.4.2 Framed Prepared Openings

Openings shall have 25 mm clearance between the duct and the opening or 25 mm clearance between the insulation and the opening for insulated ducts.

2.8.4.3 Closure Collars

Collars shall be fabricated of galvanized sheet metal not less than 100 mm wide, unless otherwise indicated, and shall be installed on exposed ducts on each side of walls or floors where sleeves or prepared openings are provided. Collars shall be installed tight against surfaces. Collars shall fit snugly around the duct or insulation. Sharp edges of the collar around insulated duct shall be ground smooth to preclude tearing or puncturing the insulation covering or vapor barrier. Collars for round ducts 375 mm in diameter or less shall be fabricated from 1.0 mm (20 gauge) galvanized steel. Collars for round ducts larger than 375 mm and square, and rectangular ducts shall be fabricated from 1.3 mm (18 gauge) galvanized steel. Collars shall be installed with fasteners on maximum 150 mm centers, except that not less than 4 fasteners shall be used.

2.8.5 Sound Attenuation Equipment

a. Acoustical Duct Liner:

Acoustical duct lining shall be fibrous glass designed exclusively for lining ductwork and shall conform to the requirements of ASTM C 1071, Type I and II. Liner composition may be uniform density, graduated density, or dual density, as standard with the manufacturer. Lining shall be coated, not less than 25 mm thick. Where acoustical duct liner is used, liner or combination of liner and insulation applied to the exterior of the ductwork shall be the thermal equivalent of the insulation specified in Section 15080 THERMAL INSULATION FOR MECHANICAL SYSTEMS. Duct sizes shown shall be increased to compensate for the thickness of the lining used. In lieu of sheet metal duct with field-applied acoustical lining, acoustically equivalent lengths of fibrous glass duct or factory fabricated double-walled internally insulated duct with perforated liner may be provided. Net insertion loss value, static pressure drop, and air flow velocity capacity data shall be certified by a nationally recognized independent acoustical laboratory.

2.8.6 Diffusers, Registers, and Grilles

Units shall be factory-fabricated of steel, corrosion-resistant steel, or aluminum and shall distribute the specified quantity of air evenly over space intended without causing noticeable drafts, air movement faster than 0.25 m/s (50 fpm) in occupied zone, or dead spots anywhere in the conditioned area. Outlets for diffusion, spread, throw, and noise level shall be as required for specified performance. Performance shall be certified according to ASHRAE 70. Inlets and outlets shall be sound rated and certified according to ASHRAE 70. Sound power level shall be as indicated. Diffusers and registers shall be provided with volume damper with accessible operator, unless otherwise indicated; or if standard with the manufacturer, an automatically controlled device will be acceptable. Volume dampers shall be opposed blade type for all diffusers and registers, except linear slot diffusers. Linear slot diffusers shall be provided with round or elliptical balancing dampers. Where the inlet and outlet openings are located less than 2 m above the floor, they shall be protected by a grille or screen according to NFPA 90A. VAV diffusers shall be manufacturer certified for VAV system use.

2.8.6.1 Diffusers

Diffuser types shall be as indicated. Ceiling mounted units shall be furnished with anti-smudge devices, unless the diffuser unit minimizes ceiling smudging through design features. Diffusers shall be provided with air deflectors of the type indicated. Air handling troffers or combination light and ceiling diffusers shall conform to the requirements of UL-03for the interchangeable use as cooled or heated air supply diffusers or return air units. Ceiling mounted units shall be installed with rims tight against ceiling. Sponge rubber gaskets shall be provided between ceiling and surface mounted diffusers for air leakage control. Suitable trim shall be provided for flush mounted diffusers. Duct collar connecting the duct to diffuser shall be airtight and shall not interfere with volume controller. Return or exhaust units shall be similar to supply diffusers.

2.8.6.2 Registers and Grilles

Units shall be four-way directional-control type, except that return and exhaust registers may be fixed horizontal or vertical louver type similar in appearance to the supply register face. Registers shall be provided with sponge-rubber gasket between flanges and wall or ceiling. Wall supply registers shall be installed at least 150 mm below the ceiling unless otherwise indicated. Return and exhaust registers shall be located 150 mm above the floor unless otherwise indicated. Four-way directional control may be achieved by a grille face which can be rotated in 4 positions or by adjustment of horizontal and vertical vanes. Grilles shall be as specified for registers, without volume control damper.

2.8.7 Louvers

Louvers for installation in exterior walls which are associated with the air supply and distribution system shall be as specified in Section 07600 SHEET METALWORK, GENERAL.

2.8.8 Air Vents, Penthouses, and Goosenecks

Air vents, penthouses, and goosenecks shall be fabricated from galvanized steel or aluminum sheets with galvanized or aluminum structural shapes.

Sheet metal thickness, reinforcement, and fabrication shall conform to SMACNA-06. Louver blades shall be accurately fitted and secured to frames. Edges of louver blades shall be folded or beaded for rigidity and baffled to exclude driving rain. Air vents, penthouses, and goosenecks shall be provided with bird screen.

2.8.9 Bird Screens and Frames

Bird screens shall conform to ASTM E 437, Type I, Class 1, 2 by 2 mesh, 1.6 mm diameter aluminum wire or 0.8 mm inch diameter stainless steel wire. Frames shall be removable type or stainless steel or extruded aluminum.

2.9 AIR SYSTEMS EQUIPMENT

2.9.1 Fans

Fans shall be tested and rated according to AMCA 210. Fans may be connected to the motors either directly or indirectly with V-belt drive. V-belt drives shall be designed for not less than 150 percent of the connected driving capacity. Motor sheaves shall be variable pitch for 11 kW (15 hp) and below and fixed pitch as defined by ARI Guideline D. Variable pitch sheaves shall be selected to drive the fan at a speed which will produce the specified capacity when set at the approximate midpoint of the sheave adjustment. When fixed pitch sheaves are furnished, a replaceable sheave shall be provided when needed to achieve system air balance. Motors for V-belt drives shall be provided with adjustable rails or bases. Removable metal guards shall be provided for all exposed V-belt drives, and speed-test openings shall be provided at the center of all rotating shafts. Fans shall be provided with personnel screens or guards on both suction and supply ends, except that the screens need not be provided, unless otherwise indicated, where ducts are connected to the fan. Fan and motor assemblies shall be provided with vibration-isolation supports or mountings as indicated. Vibration-isolation units shall be standard products with published loading ratings. Each fan shall be selected to produce the capacity required at the fan static pressure indicated. Sound power level shall be as indicated. The sound power level values shall be obtained according to AMCA 300. Standard AMCA arrangement, rotation, and discharge shall be as indicated. All variable air volume fans shall be provided with variable frequency drive units as specified in Section 15950 HEATING, VENTILATION AND AIR CONDITIONING (HVAC) CONTROL SYSTEMS.

2.9.1.1 Centrifugal Fans

Centrifugal fans shall be fully enclosed, single-width single-inlet, or double-width double-inlet, AMCA Pressure Class I, II, or III as required or indicated for the design system pressure. Impeller wheels shall be rigidly constructed, accurately balanced both statically and dynamically. Fan blades may be forward curved, backward-inclined or airfoil design in wheel sizes up to 750 mm (30 inches). Fan blades for wheels over 750 mm (30 inches) in diameter shall be backward-inclined or airfoil design. Fan wheels over 900 mm (36 inches) in diameter shall have overhung pulleys and a bearing on each side of the wheel. Fan wheels 900 mm (36 inches) or less in diameter may have one or more extra long bearings between the fan wheel and the drive. Bearings shall be sleeve type, self-aligning and self-oiling with oil reservoirs, or precision self-aligning roller or ball-type with accessible grease fittings or permanently lubricated type. Grease fittings shall be connected to tubing and serviceable from a single accessible point. Bearing life shall be L50 rated at not less than 200,000

hours as defined by ABEMA 9 and ABEMA 11. Fan shafts shall be steel, accurately finished, and shall be provided with key seats and keys for impeller hubs and fan pulleys. Each fan outlet shall be of ample proportions and shall be designed for the attachment of angles and bolts for attaching flexible connections. Motors, unless otherwise indicated, shall not exceed 1800 rpm and shall have totally enclosed fan cooled enclosures. Motor starters shall be magnetic across-the-line type except motors over 18.6 kW shall have reduced voltage starters with weather-resistant enclosure.

2.9.1.2 Centrifugal Type Power Wall Ventilators

Fans shall be direct or V-belt driven centrifugal type with backward inclined, non-overloading wheel. Motor housing shall be removable and weatherproof. Unit housing shall be designed for sealing to building surface and for discharge and condensate drippage away from building surface. Housing shall be constructed of heavy gauge aluminum. Unit shall be fitted with an aluminum or plated steel wire discharge bird screen, manufacturer's standard gravity damper, an airtight and liquid-tight metallic wall sleeve. Motor enclosure shall be totally enclosed fan cooled dripproof or explosion-proof type as indicated. Lubricated bearings shall be provided. Direct drive type shall be provided with solid state speed controllers.

2.9.1.3 Centrifugal Type Power Roof Ventilators

Fans shall be direct or V-belt driven with backward inclined, non-overloading wheel. Motor compartment housing shall be hinged or removable and weatherproof, constructed of heavy gauge aluminum. Fans shall be provided with birdscreen, disconnect switch, gravity dampers, sound curb. Motors enclosure shall be dripproof type. Lubricated bearings shall be provided.

2.9.2 Coils

Coils shall be fin-and-tube type constructed of seamless copper tubes and copper fins mechanically bonded or soldered to the tubes. Copper tube wall thickness shall be a minimum of 0.508 mm 0.020 inches). Copper fins shall be 0.114 mm (0.0045 inch) minimum thickness. Casing and tube support sheets shall be not lighter than 1.6 mm (16 gauge) galvanized steel, formed to provide structural strength. When required, multiple tube supports shall be provided to prevent tube sag. Each coil shall be tested at the factory under water at not less than 2.76 MPa (400 psi) air pressure and shall be suitable for 1.38 MPa (200 psi) working pressure. Coils shall be mounted for counterflow service. Coils shall be rated and certified according to ARI 410.

2.9.2.1 Water Coils

Water coils shall be installed with a pitch of not less than 10 mm per meter of the tube length toward the drain end. Headers shall be constructed of cast iron, welded steel or copper. Each coil shall be provided with a plugged vent and drain connection extending through the unit casing.

2.9.3 Air Filters

Air filters shall be listed according to requirements of UL 900, except high efficiency particulate air filters of 99.97 percent efficiency by the DOP Test method shall be as listed under the Label Service and shall meet

the requirements of UL 586.

2.9.3.1 Extended Surface Pleated Panel Filters

Filters shall be 50 mm (2 inch) depth, sectional, disposable type of the size indicated and shall have an average efficiency of 25 to 30 percent when tested according to ASHRAE 52.1. Initial resistance at 2.54 m/s (500 feet per minute) shall not exceed 9 mm water gauge. Filters shall be UL Class 2. Media shall be nonwoven cotton and synthetic fiber mat. A wire support grid bonded to the media shall be attached to a moisture resistant fiberboard frame. All four edges of the filter media shall be bonded to the inside of the frame to prevent air bypass and increase rigidity.

2.9.3.2 Extended Surface Nonsupported Pocket Filters

Filters shall be 750 mm (30 inch) depth, sectional, replaceable dry media type of the size indicated and shall have an average efficiency of 80 to 85 percent when tested according to ASHRAE 52.1. Initial resistance at 2.54 m/s (500 feet per minute) shall not exceed 11 mm (0.45 inches) water gauge. Filters shall be UL Class 1. Media shall be fibrous glass, supported in the air stream by a wire or non-woven synthetic backing and secured to a galvanized steel metal header. Pockets shall not sag or flap at anticipated air flows. Each filter shall be installed with an extended surface pleated panel filter as a prefilter in a factory preassembled, side access housing or a factory-made sectional frame bank, as indicated.

2.9.3.3 Replaceable Media Filters

Replaceable media filters shall be the dry-media type, of the size required to suit the application. Filtering media shall be not less than 25 mm (1 inch) thick fibrous glass media pad supported by a structural wire grid or woven wire mesh. Pad shall be enclosed in a holding frame of not less than 1.6 mm (16 gauge) galvanized steel, and equipped with quick-opening mechanism for changing filter media. The air flow capacity of the filter shall be based on net filter face velocity not exceeding 1.5 m/s (300 feet per minute), with initial resistance of 32 Pa (0.13 inches water gauge). Average efficiency shall be not less than 20 percent when tested according to ASHRAE 52.1.

2.9.3.4 Holding Frames

Frames shall be fabricated from not lighter than 1.6 mm (16 gauge) sheet steel with rust-inhibitor coating. Each holding frame shall be equipped with suitable filter holding devices. Holding frame seats shall be gasketed. All joints shall be airtight.

2.9.3.5 Filter Gauges

Filter gauges shall be dial type, diaphragm actuated draft and shall be provided for all filter stations, including those filters which are furnished as integral parts of factory fabricated air handling units. Gauges shall be at least 98 mm (3-7/8 inches) in diameter, shall have white dials with black figures, and shall be graduated in 0.25 mm (0.01 inch), and shall have a minimum range of 25 mm beyond the specified final resistance for the filter bank on which each gauge is applied. Each gauge shall incorporate a screw operated zero adjustment and shall be furnished complete with two static pressure tips with integral compression fittings, two molded plastic vent valves, two 1.5 m (5 foot) minimum lengths of 6.35 mm (1/4 inch) diameter aluminum tubing, and all hardware and accessories

for gauge mounting.

2.10 AIR HANDLING UNITS

2.10.1 Factory-Fabricated Air Handling Units

Units shall be variable volume single-zone draw-through roof top units. Units shall include fans, coils, airtight insulated casing, prefilters, secondary filter sections, air blender adjustable V-belt drives, economizer section, access sections where indicated, external pipe cabinet, vibration-isolators, and appurtenances required for specified operation. Vibration isolators shall be as indicated. Each air handling unit shall have physical dimensions suitable to fit space allotted to the unit and shall have the capacity indicated. Air handling unit shall have published ratings based on tests performed according to ARI 430. Units to have weatherproof lights inside of each fan section.

2.10.1.1 Casings

Casing sections shall be 2 inch double wall type constructed of a minimum 18 gauge galvanized steel, or 18 gauge steel outer casing protected with a corrosion resistant paint finish according to paragraph FACTORY PAINTING. Inner casing of double-wall units shall be minimum 1.0 mm (20 gauge) solid galvanized steel. Casing shall be designed and constructed with an integral structural steel frame such that exterior panels are non-load bearing. Exterior panels shall be individually removable. Removal shall not affect the structural integrity of the unit. Casings shall be provided with inspection doors, access sections, and access doors as indicated. Inspection and access doors shall be insulated, fully gasketed, double-wall type, of a minimum 1.3 mm (18 gauge) outer and 1.0 mm (20 gauge) inner panels. Doors shall be rigid and provided with heavy duty hinges and latches. Inspection doors shall be a minimum 300 mm wide by 300 mm high. Access doors shall be minimum 600 mm wide and shall be the full height of the unit casing or a minimum of 1800 mm, whichever is less. A minimum 200 mm by 200 mm sealed glass window suitable for the intended application shall be installed in all access doors. Access Sections shall be according to paragraph AIR HANDLING UNITS. Drain pan shall be double-bottom type constructed of 16 gauge stainless steel, pitched to the drain connection. Drain pans shall be constructed water tight, treated to prevent corrosion, and designed for positive condensate drainage. When 2 or more cooling coils are used, with one stacked above the other, condensate from the upper coils shall not flow across the face of lower coils. Intermediate drain pans or condensate collection channels and downspouts shall be provided, as required to carry condensate to the unit drain pan out of the air stream and without moisture carryover. Each casing section handling conditioned air shall be insulated with not less than 25 mm (1 inch) thick, 24 kg per cubic meter (1-1/2 pound density) coated fibrous glass material having a thermal conductivity not greater than 0.033 W/m-K (0.23 Btu/hr-sf-F). Factory applied fibrous glass insulation shall conform to ASTM C 1071, except that the minimum thickness and density requirements do not apply, and shall meet the requirements of NFPA 90A. Foam-type insulation is not acceptable. Foil-faced insulation shall not be an acceptable substitute for use on double-wall access doors and inspections doors and casing sections. Duct liner material, coating, and adhesive shall conform to fire-hazard requirements specified in Section 15080 THERMAL INSULATION FOR MECHANICAL SYSTEMS. Exposed insulation edges and joints where insulation panels are butted together shall be protected with a metal nosing strip or shall be coated to conform to meet erosion resistance requirements of ASTM C 1071. A latched and hinged inspection door, shall be provided in the fan

and coil sections. Additional inspection doors, access doors and access sections shall be provided where indicated.

2.10.1.2 Heating and Cooling Coils

Coils shall be provided as specified in paragraph AIR SYSTEMS EQUIPMENT, for types indicated.

2.10.1.3 Air Filters

Air filters shall be as specified in paragraph AIR SYSTEMS EQUIPMENT for types and thickness indicated.

2.10.1.4 Fans

Fans shall be double-inlet, centrifugal type with each fan in a separate scroll. Fans and shafts shall be dynamically balanced prior to installation into air handling unit, then the entire fan assembly shall be statically and dynamically balanced at the factory after it has been installed in the air handling unit. Fans shall be mounted on steel shafts accurately ground and finished. Fan bearings shall be sealed against dust and dirt and shall be precision self-aligning ball or roller type. Bearing life shall be L50 rated at not less than 200,000 hours as defined by ABEMA 9 and ABEMA 11. Bearings shall be permanently lubricated or lubricated type with lubrication fittings readily accessible at the drive side of the unit. Bearings shall be supported by structural shapes, or die formed sheet structural members, or support plates securely attached to the unit casing. Bearings may not be fastened directly to the unit sheet metal casing. Fans and scrolls shall be furnished with coating indicated. Fans shall be driven by an internally mounted motors. Belt drives shall be designed for not less than a 1.5 service factor based on motor nameplate rating. Motor sheaves shall be variable pitch for 20 kW and below and fixed pitch above 20 kW as defined by ARI Guideline D. Where fixed sheaves are required, variable pitch sheaves may be used during air balance, but shall be replaced with an appropriate fixed sheave after air balance is completed. Variable pitch sheaves shall be selected to drive the fan at a speed that will produce the specified capacity when set at the approximate midpoint of the sheave adjustment. Motors for V-belt drives shall be provided with adjustable bases. Fan motors shall have totally enclosed fan cooled enclosures. Motor starters shall be magnetic across-the-line type except motors over 18.6 kW(25 hp) shall have reduced voltage starters with general purpose enclosure. Unit fan or fans shall be selected to produce the required capacity at the fan static pressure. Sound power level shall be as indicated. The sound power level values shall be obtained according to AMCA 300 or ASHRAE 68. All variable air volume fans shall be controlled as indicated in Section 15950 HVAC CONTROL SYSTEMS. Motors shall be provided with variable frequency drive units as specified in Section 15950 HVAC CONTROL SYSTEMS.

2.10.1.5 Access Sections

Access sections shall be provided where indicated and shall be furnished with access doors as shown. Access sections shall be constructed in a manner identical to the remainder of the unit casing and shall be equipped with access doors.

2.10.1.6 Dampers

Dampers shall be as specified in paragraph CONTROLS.

2.11 TERMINAL UNITS

2.11.1 Variable Air Volume (VAV) Terminal Units

VAV units shall be the type, size, and capacity shown and shall be mounted in the ceiling or wall cavity and shall be suitable for single duct system applications. Actuators and controls shall be as specified in paragraph CONTROLS. Unit enclosures shall be constructed of galvanized steel not lighter than 0.85 mm (22 gauge) or aluminum sheet not lighter than 1.3 mm (18 gauge). Single or multiple discharge outlets shall be provided as required. Units with flow limiters are not acceptable. Unit air volume shall be factory preset and readily field adjustable without special tools. Reheat coils shall be provided as indicated. A flow chart shall be attached to each unit. Acoustic performance of the terminal units shall be based upon units tested according to ARI 880. Sound power level shall be as indicated. Discharge sound power shall be shown for minimum and 375 Pa (1-1/2 inches water gauge) inlet static pressure. Acoustical lining shall be according to NFPA 90A.

2.11.1.1 Variable Volume, Single Duct

Variable volume, single duct, terminal units shall be provided with a calibrated air volume sensing device, air valve or damper, actuator, and accessory relays. Units shall control air volume to within plus or minus 5 percent of each air set point volume as determined by the thermostat with variations in inlet pressures from 200 to 750 Pa (3/4 to 3 inch water gauge). Internal resistance of units shall not exceed 100 Pa (0.4 inch water gauge) at maximum flow range. External differential pressure taps separate from the control pressure taps shall be provided for air flow measurement with a 0 to 250 Pa (0 to 1 inch water gauge) range. Unit volume controller shall be normally open upon loss of control.

2.11.1.2 Reheat Units

a. Hot Water Coils: Hot-water coils shall be fin-and-tube type constructed of seamless copper tubes and copper or aluminum fins mechanically bonded or soldered to the tubes. Headers shall be constructed of cast iron, welded steel or copper. Casing and tube support sheets shall be 1.6 mm (16 gauge), galvanized steel, formed to provide structural strength. Tubes shall be correctly circuited for proper water velocity without excessive pressure drop and they shall be drainable where required or indicated. At the factory, each coil shall be tested at not less than 1700 kPa (250 psi) air pressure and shall be suitable for 1400 kPa (200 psi) working pressure. Drainable coils shall be installed in the air handling units with a pitch of not less than 10 mm per m (1/8 inch per foot) of tube length toward the drain end. Coils shall conform to the provisions of ARI 410. Reheat coils shall be installed in a counterflow arrangement.

2.12 FACTORY PAINTING

Units which are not of galvanized construction according to ASTM A 123or ASTM A 924 shall be factory painted with a corrosion resisting paint finish. Internal and external ferrous metal surfaces shall be cleaned, phosphatised and coated with a paint finish which has been tested according to ASTM B 117, ASTM D 1654, and ASTM D 3359. Evidence of satisfactory paint performance for a minimum of 125 hours for units to be installed

indoors and 500 hours for units to be installed outdoors shall be submitted. Rating of failure at the scribe mark shall be not less than 6, average creepage not greater than 3 mm. Rating of the inscribed area shall not be less than 10, no failure. On units constructed of galvanized steel which have been welded, exterior surfaces of welds or welds that have burned through from the interior shall receive a final shop docket of zinc-rich protective paint according to ASTM D 520 Type I.

2.13 FREEZE PROTECTION-ELECTRIC HEAT TRACING

2.13.1 Purpose of Freeze Protection

Electric heat tracing for the purpose of freeze protection shall be installed on the piping under insulation for the roof top AH4 condensate drain line.

2.13.2 Maintain Temperature

The heat tracing shall be capable of maintaining a minimum temperature of 4 degrees C at an ambient air temperature of -18 degrees C.

2.13.3 Self Regualting Feature

Operating energy shall be conserved by the self-regulating feature of the heater materials which automatically controls heat output in proportion to the heat requirements. Operating safety shall be increased by the absolute heater temperature limit of 68 degrees C built into the self-regulating heater material without a reliance on thermostats. A constant wattage heater shall not be acceptable.

2.13.4 Localized Temperature Conditions

The electric heat tracing shall be self-regulating. The heater shall respond to varying localized temperature conditions along the pipe by self-regulating its heat output at each point along its length without reliance on thermostat controls.

2.13.5 Parallel Circuit Construction

The electric heat tracing shall consist of flat, flexible, low-heat density electric tracing strip of parallel circuit construction, consisting of 16 AWG tinned copper bus bars and a continuous inner core of self-regulating conductive material. This core shall be insulated with a radiation crosslinked polyolefin jacket and shall have a braided tinned copper shield with a modified overall polyolefin outer jacket. The heat tracing strip shall be capable of being cut to the desired length in the field.

2.13.6 Voltage

The heater shall operate on 120 volts.

2.13.7 Temperature Range Setting

Thermostat shall have a temperature range setting of 3.9 to 163 degres C and shall close on a fall in temperature. Contact rating shall be 22 amps at 125 volts AC. Thermostat contacts shall be housed in a NEMA 4X enclosure. Remote bulb shall have a 3048 m (10 foot) capillary.

2.13.8 Interconnect Components

The self-regulating heater, in combination with the interconnect components, shall have a UL system listing.

2.13.9 Protected Pipe

Self-regulating heater shall be installed against protected pipe and fittings below insulation.

2.13.10 Secure Heater Cables

Secure heater cable at intervals specified by the manufacturer with glass cloth tape for metal pipes and aluminum tape for plastic pipes.

2.13.11 Mounting

Thermostat shall be mounted as recommended by the manufacturer.

2.13.12 Signs

Apply "Electric Traced" signs to the outside of the thermal insualtion.

2.13.13 Cable Testing

After installation and before and after installation of the thermal insulation, test the cable in accordance with the manufacturer's recommendations.

PART 3 EXECUTION

3.1 INSTALLATION

Work shall be installed as shown and according to the manufacturer's diagrams and recommendations.

3.1.1 Piping

Pipe and fitting installation shall conform to the requirements of ASME B31.1. Pipe shall be cut accurately to measurements established at the jobsite, and worked into place without springing or forcing, completely clearing all windows, doors, and other openings. Cutting or other weakening of the building structure to facilitate piping installation will not be permitted without written approval. Pipe or tubing shall be cut square, shall have burrs removed by reaming, and shall permit free expansion and contraction without causing damage to the building structure, pipe, joints, or hangers. Changes in direction shall be made with fittings, except that bending of pipe 100 mm (4 inches) and smaller will be permitted, provided a pipe bender is used and wide sweep bends are formed. The centerline radius of bends shall not be less than 6 diameters of the pipe. Bent pipe showing kinks, wrinkles, flattening, or other malformations will not be accepted. Horizontal supply mains shall pitch down in the direction of flow as indicated. The grade shall be not less than 2 mm in 1 m. Reducing fittings shall be used for changes in pipe sizes. Open ends of pipelines and equipment shall be capped or plugged during installation to keep dirt or other foreign materials out of the system. Pipe not otherwise specified shall be uncoated. Connections to appliances shall be made with malleable iron unions for steel pipe 65 mm (2-1/2 inches) or less in diameter, and with flanges for pipe 80 mm (3 inches) and larger. Connections between ferrous and copper piping shall be

electrically isolated from each other with dielectric unions or flanges. All piping located in air plenums shall conform to NFPA 90Arequirements. Pipe and fittings installed in inaccessible conduits or trenches under concrete floor slabs shall be welded.

3.1.1.1 Joints

a. Threaded Joints: Threaded joints shall be made with tapered threads and made tight with a stiff mixture of graphite and oil or polytetrafluoroethylene tape or equivalent thread joint compound or material, applied to the male threads only.

b. Soldered Joints: Joints in copper tubing shall be cut square with ends reamed, and all filings and dust wiped from interior of pipe. Joints shall be soldered with 95/5 solder or brazed with silver solder applied and drawn through the full fitting length. Care shall be taken to prevent annealing of tube or fittings when making connections. Joints 65 mm (2-1/2 inches) and larger shall be made with heat uniformly around the entire circumference of the joint with a multi-flame torch. Connections in floor slabs shall be brazed. Excess solder shall be wiped from joint before solder hardens.

c. Welded Joints: Welding shall be according to qualified procedures using qualified welders and welding operators. Procedures and welders shall be qualified according to ASME BPV IX. Welding procedures qualified by others and welders and welding operators qualified by another operator may be permitted by ASME B31.1. Structural members shall be welded according to Section 05055 WELDING, STRUCTURAL. All welds shall be permanently identified by imprinting the welder's or welding operator's assigned symbol adjacent to the weld. Welded joints shall be fusion welded unless otherwise required. Changes in direction of piping shall be made with welding fittings only; mitering or notching pipe to form elbows and tees or other similar type construction will not be permitted. Branch connections may be made with either welding tees or branch outlet fittings. Branch outlet fittings shall be forged, flared for improvement of flow where attached to the run, and reinforced against external strains. Beveling, alignment, heat treatment and inspection of weld shall conform to ASME B31.1. Weld defects shall be removed and repairs made to the weld, or the weld joints shall be entirely removed and rewelded. Electrodes shall be stored and dried according to AWS D1.1 or as recommended by the manufacturer. Electrodes that have been wetted or that have lost any of their coating shall not be used.

3.1.1.2 Grooved Mechanical Joints

Grooves shall be prepared according to the coupling manufacturer's instructions. Pipe and groove dimensions shall comply with the tolerances specified by the coupling manufacturer. The diameter of grooves made in the field shall be measured using a "go/no-go" gauge, vernier or dial caliper, or narrow-land micrometer. Groove width and dimension of groove from end of pipe shall be measured and recorded for each change in grooving tool setup to verify compliance with coupling manufacturer's tolerances. Grooved joints shall not be used in concealed locations.

3.1.1.3 Flanges and Unions

Except where copper tubing is used, union or flanged joints shall be provided in each line immediately preceding the connection to each piece of equipment or material requiring maintenance such as coils, pumps, control valves, and other similar items.

3.1.2 Supports

3.1.2.1 General

Hangers used to support piping 50 mm (2 inches) and larger shall be fabricated to permit adequate adjustment after erection while still supporting the load. Pipe guides and anchors shall be installed to keep pipes in accurate alignment, to direct the expansion movement, and to prevent buckling, swaying, and undue strain. Piping subjected to vertical movement when operating temperatures exceed ambient temperatures shall be supported by variable spring hangers and supports or by constant support hangers.

3.1.2.2 Seismic Requirements

Equipment shall be supported and braced to resist seismic loads as specified under Section 13080 SEISMIC PROTECTION FOR MECHANICAL, ELECTRICAL EQUIPMENT. Structural steel required for reinforcement to properly support piping, headers, and equipment but not shown shall be provided under this section. Material used for support shall be as specified under Section 05120 STRUCTURAL STEEL.ST

3.1.2.3 Pipe Hangers, Inserts and Supports

Pipe hangers, inserts, and supports shall conform to MSS SP-58 and MSS SP-69, except as modified herein. Types 5, 12, and 26 shall not be used.

a. Hangers: Type 3 shall not be used on insulated piping.

b. Inserts: Type 18 inserts shall be secured to concrete forms before concrete is placed. Continuous inserts which allow more adjustment may be used if they otherwise meet the requirements for Type 18 inserts.

c. C-Clamps: Type 19 and 23 C-clamps shall be torqued per MSS SP-69 and have both locknuts and retaining devices, furnished by the manufacturer. Field-fabricated C-clamp bodies or retaining devices are not acceptable.

d. Angle Attachments: Type 20 attachments used on angles and channels shall be furnished with an added malleable-iron heel plate or adapter.

e. Hangers: Type 24 may be used only on trapeze hanger systems or on fabricated frames.

f. Type 39 saddles shall be used on all insulated pipe 100 mm (4 inches) and larger when the temperature of the medium is above 15.5 degrees C. Type 39 saddles shall be welded to the pipe.

g. Type 40 shields shall:

(1) be used on all insulated pipes less than 100 mm (4 inches).

(2) be used on all insulated pipes 100 mm (4 inches) and larger when the temperature of the medium is 15.5 degrees C or less.

(3) have a high density insert for pipe 50 mm (2 inches) and larger, and for smaller pipe when the insulation shows signs of being visibly compressed, or when the insulation or jacket shows visible signs of distortion at or near the type 40 shield. High density inserts shall have a density of 144 kg/cubic meter (9 pcf) or greater.

h. Horizontal Pipe Supports: Horizontal pipe supports shall be spaced as specified in MSS SP-69 and a support shall be installed not over 300 mm (1 foot) from the pipe fitting joint at each change in direction of the piping. Pipe supports shall be spaced not over 1.5 m apart at valves. Pipe hanger loads suspended from steel joist with hanger loads between panel points in excess of 220 N (50 pounds) shall have the excess hanger loads suspended from panel points.

i. Vertical Pipe Supports: Vertical pipe shall be supported at each floor, except at slab-on-grade, and at intervals of not more than 5 m, not more than 2.4 m from end of risers, and at vent terminations.

j. Pipe Guides: Type 35 guides using steel reinforced polytetrafluoroethylene (PTFE) or graphite slides shall be provided where required to allow longitudinal pipe movement. Lateral restraints shall be provided as required. Slide materials shall be suitable for the system operating temperatures, atmospheric conditions, and bearing loads encountered.

k. Steel Slides: Where steel slides do not require provisions for restraint of lateral movement, an alternate guide method may be used. On piping 100 mm (4 inches) and larger with medium 15.5 degrees C or greater, a Type 39 saddle may be welded to the pipe and freely rest on a steel plate. On piping under 100 mm (4 inches), a Type 40 protection shield may be attached to the pipe or insulation and freely rest on a steel slide plate.

l. High Temperature Guides with Cradles: Where there are high system temperatures and welding to piping is not desirable, the Type 35 guide shall include a pipe cradle, welded to the guide structure and strapped securely to the pipe. The pipe shall be separated from the slide material by at least 100 mm, or by an amount adequate for the insulation, whichever is greater.

m. Insulated Pipe: Insulation on horizontal pipe shall be continuous through hangers for hot and cold piping. Other requirements on insulated pipe are specified in Section 15080 THERMAL INSULATION FOR MECHANICAL SYSTEMS.

3.1.3 Anchors

Anchors shall be provided wherever necessary or indicated to localize expansion or to prevent undue strain on piping. Anchors shall consist of heavy steel collars with lugs and bolts for clamping and attaching anchor braces, unless otherwise indicated. Anchor braces shall be installed in the most effective manner to secure the desired results using turnbuckles where required. Supports, anchors, or stays shall not be attached where

they will injure the structure or adjacent construction during installation or by the weight of expansion of the pipeline.

3.1.4 Pipe Sleeves

Sleeves shall not be installed in structural members except where indicated or approved. Rectangular and square openings shall be as detailed. Each sleeve shall extend through its respective wall, floor, or roof, and shall be cut flush with each surface. Pipes passing through concrete or masonry wall or concrete floors or roofs shall be provided with pipe sleeves fitted into place at the time of construction. Unless otherwise indicated, sleeves shall provide a minimum of 6 mm all-around clearance between bare pipe and sleeves or between jacket over insulation and sleeves. Sleeves in bearing walls, waterproofing membrane floors, and wet areas shall be steel pipe or cast iron pipe. Sleeves in non-bearing walls, floors, or ceilings may be steel pipe, cast iron pipe, galvanized sheet metal with lock-type longitudinal seam and of the metal thickness indicated, or moisture resistant fiber or plastic. Except in pipe chases or interior walls, the annular space between pipe and sleeve or between jacket over insulation and sleeve, in non-fire rated walls, shall be sealed as indicated and specified in Section 07920 JOINT SEALING. Pipes passing through wall waterproofing membrane shall be sleeved as specified above, and a waterproofing clamping flange shall be installed as indicated.

3.1.4.1 Roof and Floor Sleeves

Pipes passing through roof or floor waterproofing membrane shall be installed through a 17-ounce copper sleeve or a 0.8 mm thick aluminum sleeve, each within an integral skirt or flange. Flashing sleeve shall be suitably formed, and skirt or flange shall extend not less than 200 mm from the pipe and shall be set over the roof or floor membrane in a troweled coating of bituminous cement. Unless otherwise shown, the flashing sleeve shall extend up the pipe a minimum of 50 mm above highest floor level or a minimum of 250 mm above the roof. The annular space between the flashing sleeve and the bare pipe or between the flashing sleeve and the metal-jacket-covered insulation shall be sealed as indicated. Pipes up to and including 250 mm (10 inches) in diameter passing through roof or floor waterproofing membrane may be installed through a cast iron sleeve with caulking recess, anchor lugs, flashing clamp device, and pressure ring with brass bolts. Waterproofing membrane shall be clamped into place and sealant shall be placed in the caulking recess. In lieu of a waterproofing clamping flange and caulking and sealing of annular space between pipe and sleeve or conduit and sleeve, a modular mechanical type sealing assembly may be installed. Seals shall consist of interlocking synthetic rubber links shaped to continuously fill the annular space between the pipe/conduit and sleeve with corrosion protected carbon steel bolts, nuts, and pressure plates. Links shall be loosely assembled with bolts to form a continuous rubber belt around the pipe with a pressure plate under each bolt head and each nut. After the seal assembly is properly positioned in the sleeve, tightening of the bolt shall cause the rubber sealing elements to expand and provide a watertight seal between the pipe/conduit and the sleeve. Each seal assembly shall be sized as recommended by the manufacturer to fit the pipe/conduit and sleeve involved.

3.1.4.2 Fire Seal

Where pipes pass through firewalls, fire partitions, or floors, a fire seal shall be provided as specified in Section 07270 FIRESTOPPING.

3.1.4.3 Escutcheons

Escutcheons shall be provided at finished surfaces where exposed piping, bare or insulated, passes through floors, walls, or ceilings except in boiler, utility, or equipment rooms. Where sleeves project slightly from floors, special deep-type escutcheons shall be used. Escutcheons shall be secured to pipe or pipe covering.

3.1.5 Condensate Drain Lines

Water seals shall be provided in the condensate drain from all units. The depth of each seal shall be 50 mm plus 0.1 mm for each Pa, of the total static pressure rating of the unit to which the drain is connected. Water seals shall be constructed of 2 tees and an appropriate U-bend with the open end of each tee plugged. Pipe cap or plug cleanouts shall be provided where indicated. Drains indicated to connect to the sanitary waste system shall be connected by an indirect waste fitting. Air conditioner drain lines shall be insulated as specified in Section 15080 THERMAL INSULATION FOR MECHANICAL SYSTEMS.

3.1.6 Pipe-Alignment Guides

Pipe-alignment guides shall be provided where indicated for expansion loops, offsets, and bends and as recommended by the manufacturer for expansion joints, not to exceed 1.5 m on each side of each expansion joint, and in lines 100 mm (4 inches) or smaller not more than 600 mm on each side of the joint.

3.1.7 Air Vents and Drains

3.1.7.1 Vents

Air vents shall be provided at high points, on water coils, and where indicated to ensure adequate venting of the piping system.

3.1.7.2 Drains

Drains shall be provided at low points and where indicated to ensure complete drainage of the piping. Drains shall be accessible, and shall consist of nipples and caps or plugged tees unless otherwise indicated.

3.1.8 Valves

Isolation gate or ball valves shall be installed on each side of each piece of equipment such as pumps, heaters, heating or cooling coils, and other similar items, at the midpoint of all looped mains, and at any other points indicated or required for draining, isolating, or sectionalizing purposes. Isolation valves may be omitted where balancing cocks are installed to provide both balancing and isolation functions. Each valve except check valves shall be identified. Valves in horizontal lines shall be installed with stems horizontal or above.

3.1.9 Equipment and Installation

Frames and supports shall be provided for tanks, compressors, pumps, valves, air handling units, fans, coils, dampers, and other similar items requiring supports. Air handling units shall be floor mounted or ceiling hung, as indicated. The method of anchoring and fastening shall be as

detailed. Floor-mounted equipment, unless otherwise indicated, shall be set on not less than 150 mm (6 inch) concrete pads or curbs doweled in place. Concrete foundations for circulating pumps shall be heavy enough to minimize the intensity of the vibrations transmitted to the piping and the surrounding structure, as recommended in writing by the pump manufacturer. In lieu of a concrete pad foundation, a concrete pedestal block with isolators placed between the pedestal block and the floor may be provided. The concrete foundation or concrete pedestal block shall be of a mass not less than three times the weight of the components to be supported. Lines connected to the pump mounted on pedestal blocks shall be provided with flexible connectors. Foundation drawings, bolt-setting information, and foundation bolts shall be furnished prior to concrete foundation construction for all equipment indicated or required to have concrete foundations. Concrete for foundations shall be as specified in Section 03300 CAST-IN-PLACE STRUCTURAL CONCRETE.

3.1.10 Access Panels

Access panels shall be provided for concealed valves, vents, controls, dampers, and items requiring inspection or maintenance. Access panels shall be of sufficient size and located so that the concealed items may be serviced and maintained or completely removed and replaced. Access panels shall be as specified in Section 05500 MISCELLANEOUS METALS.

3.1.11 Flexible Connectors

Pre-insulated flexible connectors and flexible duct shall be attached to other components in accordance with the latest printed instructions of the manufacturer to ensure a vapor tight joint. Hangers, when required to suspend the connectors, shall be of the type recommended by the connector or duct manufacturer and shall be provided at the intervals recommended.

3.1.12 Sleeved and Framed Openings

Space between the sleeved or framed opening and the duct or the duct insulation shall be packed as specified in Section 07270 FIRESTOPPING for fire rated penetrations. For non-fire rated penetrations, the space shall be packed as specified in Section 07900 JOINT SEALING.

3.1.13 Metal Ductwork

Installation shall be according to SMACNA-06 unless otherwise indicated. Duct supports for sheet metal ductwork shall be according to SMACNA-06, unless otherwise specified. Friction beam clamps indicated in SMACNA-06 shall not be used. Risers on high velocity ducts shall be anchored in the center of the vertical run to allow ends of riser to move due to thermal expansion. Supports on the risers shall allow free vertical movement of the duct. Supports shall be attached only to structural framing members and concrete slabs. Supports shall not be anchored to metal decking unless a means is provided and approved for preventing the anchor from puncturing the metal decking. Where supports are required between structural framing members, suitable intermediate metal framing shall be provided. Where C-clamps are used, retainer clips shall be provided.

3.1.13.1 Light Duty Corrosive Exhaust Ductwork - Photo Lab, Service Area, UPS Room

Light duty corrosive exhaust ductwork shall be PVC plastisol coated galvanized steel with PVC coating on interior surfaces and exterior

surfaces.

3.1.14 Fibrous Glass Ductwork

Installation shall be according to the manufacturer's written recommendations unless otherwise required in NAIMA-01. Duct supports for fibrous glass ductwork shall conform to NAIMA-01. In those cases not covered in NAIMA-01, the written recommendation of the fibrous duct manufacturer shall be followed.

3.1.15 Acoustical Duct Lining

Lining shall be applied in cut-to-size pieces attached to the interior of the duct with nonflammable fire resistant adhesive conforming to ASTM C 916, Type I, NFPA 90A, UL 723, and ASTM E 84. Top and bottom pieces shall lap the side pieces and shall be secured with welded pins, adhered clips of metal, nylon, or high impact plastic, and speed washers or welding cup-head pins installed according to SMACNA-06. Welded pins, cup-head pins, or adhered clips shall not distort the duct, burn through, nor mar the finish or the surface of the duct. Pins and washers shall be flush with the surfaces of the duct liner and all breaks and punctures of the duct liner coating shall be sealed with the nonflammable, fire resistant adhesive. Exposed edges of the liner at the duct ends and at other joints where the lining will be subject to erosion shall be coated with a heavy brush coat of the nonflammable, fire resistant adhesive, to prevent delamination of glass fibers. Duct liner may be applied to flat sheet metal prior to forming duct through the sheet metal brake. Lining at the top and bottom surfaces of the duct shall be additionally secured by welded pins or adhered clips as specified for cut-to-size pieces. Other methods indicated in SMACNA-06 to obtain proper installation of duct liners in sheet metal ducts, including adhesives and fasteners, will be acceptable.

3.1.16 Dust Control

To prevent the accumulation of dust, debris and foreign material during construction, temporary dust control protection shall be provided. The distribution system (supply and return) shall be protected with temporary seal-offs at all inlets and outlets at the end of each day's work. Temporary protection shall remain in place until system is ready for startup.

3.1.17 Insulation

Thickness and application of insulation materials for ductwork, piping, and equipment shall be according to Section 15080 THERMAL INSULATION FOR MECHANICAL SYSTEMS.

3.1.18 Duct Test Holes

Holes with closures or threaded holes with plugs shall be provided in ducts and plenums as indicated or where necessary for the use of pitot tube in balancing the air system. Extensions, complete with cap or plug, shall be provided where the ducts are insulated.

3.1.19 Power Roof Ventilator Mounting

Foamed 13 mm (1/2 inch) thick, closed-cell, flexible elastomer insulation shall cover width of roof curb mounting flange. Where wood nailers are used, holes shall be pre-drilled for fasteners.

3.1.20 Power Transmission Components Adjustment

V-belts and sheaves shall be tested for proper alignment and tension prior to operation and after 72 hours of operation at final speed. Belts on drive side shall be uniformly loaded, not bouncing. Alignment of direct driven couplings shall be to within 50 percent of manufacturer's maximum allowable range of misalignment.

3.2 FIELD PAINTING AND PIPING IDENTIFICATION

Finish painting of items only primed at the factory or surfaces not specifically noted otherwise and identification for piping are specified in Section 09900 PAINTING, GENERAL.

3.3 PIPING HYDROSTATIC TEST

After cleaning, water piping shall be hydrostatically tested at a pressure equal to 150 percent of the total system operating pressure for period of time sufficient to inspect every joint in the system and in no case less than 2 hours. Leaks shall be repaired and piping retested until test is successful. No loss of pressure will be allowed. Leaks shall be repaired by re-welding or replacing pipe or fittings. Caulking of joints will not be permitted. Concealed and insulated piping shall be tested in place before covering or concealing.

3.4 DUCTWORK LEAK TEST

Ductwork leak test shall be performed for the entire air distribution and exhaust system, including fans, coils, filters, etc. Test procedure, apparatus, and report shall conform to SMACNA-10. Ductwork leak test shall be completed with satisfactory results prior to applying insulation to ductwork exterior.

3.5 CLEANING AND ADJUSTING

Pipes shall be cleaned free of scale and thoroughly flushed of foreign matter. A temporary bypass shall be provided for water coils to prevent flushing water from passing through coils. Strainers and valves shall be thoroughly cleaned. Prior to testing and balancing, air shall be removed from water systems by operating the air vents. Temporary measures, such as piping the overflow from vents to a collecting vessel shall be taken to avoid water damage during the venting process. Air vents shall be plugged or capped after the system has been vented. Inside of air terminal units, ducts, plenums, and casing shall be thoroughly cleaned of debris and blown free of small particles of rubbish and dust and then shall be vacuum cleaned before installing outlet faces. Equipment shall be wiped clean, with traces of oil, dust, dirt, or paint spots removed. Temporary filters shall be provided prior to startup of all fans that are operated during construction, and new filters shall be installed after all construction dirt has been removed from the building, and the ducts, plenums, casings, and other items specified have been vacuum cleaned. System shall be maintained in this clean condition until final acceptance. Bearings shall be properly lubricated with oil or grease as recommended by the manufacturer. Belts shall be tightened to proper tension. Control valves and other miscellaneous equipment requiring adjustment shall be adjusted to setting indicated or directed. Fans shall be adjusted to the speed indicated by the manufacturer to meet specified conditions.

3.6 TESTING, ADJUSTING, AND BALANCING

Testing, adjusting, and balancing shall be as specified in Section 15990 TESTING, ADJUSTING AND BALANCING OF HVAC SYSTEMS. Testing, adjusting, and balancing shall begin only when the air supply and distribution, including controls, has been completed, with the exception of performance tests.

3.7 PERFORMANCE TESTS

After testing, adjusting, and balancing has been completed as specified, each system shall be tested as a whole to see that all items perform as integral parts of the system and temperatures and conditions are evenly controlled throughout the building. Corrections and adjustments shall be made as necessary to produce the conditions indicated or specified. Capacity tests and general operating tests shall be conducted by an experienced engineer. Tests shall cover a period of not less than 2 days for each system and shall demonstrate that the entire system is functioning according to the specifications. Coincidental chart recordings shall be made at points indicated on the drawings for the duration of the time period and shall record the temperature at space thermostats or space sensors, the humidity at space humidistats or space sensors and the ambient temperature and humidity in a shaded and weather protected area.

3.8 FIELD TRAINING

The Contractor shall conduct a training course for operating and maintenance personnel as designated by the Contracting Officer. Training shall be provided for a period of 8 hours of normal working time and shall start after the system is functionally complete but prior to the performance tests. The field instruction shall cover all of the items contained in the approved Operating and Maintenance Instructions.

-- End of Section --

SECTION 15950
HEATING, VENTILATING AND AIR CONDITIONING (HVAC) CONTROL SYSTEMS

PART 1 GENERAL

1.1 REFERENCES

The publications listed below form a part of this specification to the extent referenced. The publications are referred to in the text by basic designation only.

AIR MOVEMENT AND CONTROL ASSOCIATION (AMCA)

AMCA 500	(1989) Test Methods for Louvers, Dampers and Shutters

AMERICAN SOCIETY FOR TESTING AND MATERIALS (ASTM)

ASTM A 269	(1994a) Seamless and Welded Austenitic Stainless Steel Tubing for General Service
ASTM B 88	(1996) Seamless Copper Water Tube
ASTM D 635	(1991) Rate of Burning and/or Extent and Time of Burning of Self-Supporting Plastics in a Horizontal Position
ASTM D 1693	(1994) Environmental Stress-Cracking of Ethylene Plastics

AMERICAN SOCIETY OF MECHANICAL ENGINEERS (ASME)

ASME B40.1	(1991) Gauges - Pressure Indicating Dial Type - Elastic Element
ASME BPV VIII Div 1	(1995; Addenda Dec 1995) Boiler and Pressure Vessel Code; Section VIII, Pressure Vessels Division 1 - Basic Coverage

CODE OF FEDERAL REGULATIONS (CFR)

47 CFR 15	Radio Frequency Devices

INSTITUTE OF ELECTRICAL AND ELECTRONICS ENGINEERS (IEEE)

IEEE C62.41	(1991) Surge Voltages in Low-Voltage AC Power Circuits

INTERNATIONAL SOCIETY FOR MEASUREMENT AND CONTROL (ISA)

ISA S7.3	(1975; R 1981) Quality Standard for Instrument Air

NATIONAL ELECTRICAL MANUFACTURERS ASSOCIATION (NEMA)

NEMA 250	(1991) Enclosures for Electrical Equipment (1000 Volts Maximum)

NATIONAL FIRE PROTECTION ASSOCIATION (NFPA)

NFPA 70	(1996) National Electrical Code
NFPA 90A	(1993) Installation of Air Conditioning and Ventilating Systems

UNDERWRITERS LABORATORIES (UL)

UL 94	(1996) Tests for Flammability of Plastic Materials for Parts in Devices and Appliances
UL 508	(1993) Industrial Control Equipment
UL 555S	(1996) Leakage Rated Dampers for Use in Smoke-Control Systems
UL 916	(1994; Rev thru May 1996) Energy Management Equipment

1.2 GENERAL REQUIREMENTS

1.2.1 Verification of Dimensions

The Contractor shall become familiar with all details of the work, shall verify all dimensions in the field, and shall advise the Contracting Officer of any discrepancy before performing any work.

1.2.2 Drawings

Because of the small scale of the drawings, it is not possible to indicate all offsets, fittings, and accessories that may be required. The Contractor shall investigate the mechanical, electrical, and finish conditions that could affect the work to be performed, shall arrange such work accordingly, and shall furnish all work necessary to meet such conditions.

1.3 SUBMITTALS

Government approval is required for submittals with a "GA" designation; submittals having an "FIO" designation are for information only. The following shall be submitted in accordance with Section 01330 SUBMITTAL PROCEDURES:

SD-01 Data

Equipment Compliance Booklet; GA|ED.

An HVAC control system equipment compliance booklet (ECB) in indexed booklet form with numbered tabs separating the information on each device. It shall consist of, but not be limited to, data sheets and catalog cuts which document compliance of all devices and components with the specifications. The ECB shall be indexed in alphabetical order by the unique identifiers. Devices and components which do not have unique identifiers shall follow the devices and components with unique identifiers

and shall be indexed in alphabetical order according to their functional name. The ECB shall include a bill of materials for each HVAC control system. The bill of materials shall function as the table of contents for the ECB and shall include the device's unique identifier, device function, manufacturer, model/part/catalog number used for ordering, and tab number where the device information is located in the ECB.

SD-04 Drawings
(Applicable for each AHU)

HVAC Control System; GA|ED.

Drawings on A1 841 by 594 mm sheets in the form and arrangement shown. The drawings shall use the same abbreviations, symbols, nomenclature and device identifiers shown. Each control-system element on a drawing shall have a unique identifier as shown. All HVAC control system drawings shall be delivered together as a complete submittal. Drawings shall be submitted for each HVAC system.

a. HVAC control system drawings shall include the following:

Sheet One: Drawing index, HVAC control system legend.

Sheet Two: Valve schedule, damper schedule.

Sheet Three: Compressed air station schematic.

Sheet Four: HVAC control system schematic and equipment schedule.

Sheet Five: HVAC control system sequence of operation and ladder diagram.

Sheet Six: HVAC control panel arrangement, control panel cross-section, and control panel inner door layout.

Sheet Seven: HVAC control panel back-panel layout.

Sheet Eight: Control loop wiring diagrams.

Sheet Nine: Motor starter and relay wiring diagram.

Note: Repeat sheets four through nine for each AHU system.

b. An HVAC control system drawing index showing the name and number of the building, military site, State or other similar designation, and Country. The drawing index shall list all HVAC control system drawings, including the drawing number, sheet number, drawing title, and computer filename when used.

c. An HVAC control system legend showing generic symbols and the name of devices shown on the HVAC control system drawings.

d. A valve schedule showing each valve's unique identifier, size, flow coefficient (Cv), pressure drop at specified flow rate, spring range, positive positioner range, actuator size, close-off pressure data, dimensions, and access and clearance requirements data.

e. A damper schedule showing each damper and actuator's identifier, nominal and actual sizes, orientation of axis and frame, direction

of blade rotation, spring ranges, operation rate, positive positioner ranges, locations of actuators and damper end switches, arrangement of sections in multi-section dampers, and methods of connecting dampers, actuators, and linkages. The damper schedule shall include the maximum leakage rate at the operating static-pressure differential. The damper schedule shall contain actuator selection data supported by calculations of the torque required to move and seal the dampers, access and clearance requirements.

f. A compressed-air station schematic diagram showing all equipment, including: compressor with motor horsepower and voltage; starter; isolators; manual bypasses; tubing sizes; drain piping and drain traps; reducing valves; dryer; and data on manufacturer's names and model numbers, mounting, access, and clearance requirements. Air compressor and air dryer data shall include calculations of the air consumption of current-to-pneumatic transducers and any other control system devices to be connected to the compressed air station, and the compressed air supply dewpoint temperature at 140 kPa (gauge).

g. An HVAC control system equipment schedule showing the control loop, device unique identifier, device function, setpoint, input range, and additional important parameters (i.e. output range).

h. An HVAC control system sequence of operation.

I. An HVAC control system ladder diagram showing all relays, contacts, pilot lights, switches, fuses and starters connected to the control system.

j. HVAC control panel arrangement drawings showing both side and front views of the panel. The drawing shall show panel and mounting dimensions.

k. HVAC control panel cross-section drawings showing mounting rails and standoffs for devices.

l. HVAC control panel inner door layout drawings showing both front and rear views of the inner door. The drawings shall show device locations, labels, nameplate legends, and fabrication details.

m. HVAC control panel back-panel layout drawings showing device locations, labels, nameplate legends, terminal block layout, fabrication details, and enclosure operating temperature-rise calculations.

n. HVAC control system wiring diagrams showing functional wiring diagrams of the interconnection of conductors and cables to HVAC control panel terminal blocks and to the identified terminals of devices, starters and package equipment. The wiring diagrams shall show all necessary jumpers and ground connections. The wiring diagrams shall show the labels of all conductors. Sources of power required for HVAC control systems and for packaged-equipment control systems shall be identified back to the panel-board circuit breaker number, HVAC system control panel, magnetic starter, or packaged equipment control circuit. Each power supply and transformer not integral to a controller, starter, or packaged equipment shall be shown. The connected

volt-ampere load and the power supply volt-ampere rating shall be shown.

SD-08 Statements

Commissioning Procedures; FIO;AR .

a. Six copies of the HVAC control system commissioning procedures, in indexed booklet form, 60 days prior to the scheduled start of commissioning. Commissioning procedures shall be provided for each HVAC control system, and for each type of terminal-unit control system. The commissioning procedures shall reflect the format and language of this specification, and refer to devices by their unique identifiers as shown. The commissioning procedures shall be specific for each HVAC system, and shall give detailed step-by-step procedures for commissioning of the system.

b. Commissioning procedures documenting detailed, product-specific set-up procedures, configuration procedures, adjustment procedures, and calibration procedures for each device. Where the detailed product-specific commissioning procedures are included in manufacturer supplied manuals, reference may be made in the HVAC control system commissioning procedures to the manuals.

c. Commissioning procedures documenting controller configuration checksheets for each controller listing all configuration parameters, dip switch and jumper settings, and initial recommended P, I and D values. The configuration parameters shall be listed in the order in which they appear during the configuration process. Each configuration parameter shall be noted as being: set per specs with no field adjustment required, set per specs but field adjustable, or not applicable.

d. Commissioning procedures showing a time clock configuration checksheet listing all parameters, and switch settings. The parameters shall be listed in the order which they appear during the setup process.

e. An HVAC control system commissioning procedures equipment list that lists the equipment to be used to accomplish commissioning. The list shall include manufacturer name, model number, equipment function, the date of the latest calibration, and the results of the latest calibration.

Performance Verification Test Procedures; FIO;AR.

Six copies of the HVAC control system performance verification test procedures, in indexed booklet form, 60 days before the Contractor's scheduled test dates. The performance verification test procedures shall refer to the devices by their unique identifiers as shown, shall explain, step-by-step, the actions and expected results that will demonstrate that the HVAC control system performs in accordance with the sequences of operation. An HVAC control system performance verification test equipment list shall be included that lists the equipment to be used during performance verification testing. The list shall include manufacturer name, model number, equipment function, the date of the latest calibration, and the results of the latest calibration.

Training Course Materials; FIO;AR.

Six copies of HVAC control system training course material 30 days prior to the scheduled start of the training course. The training course material shall include the operation manual, maintenance and repair manual, and paper copies of overheads used in the course. An HVAC control system training course, in outline form, with a proposed time schedule. Approval of the planned training schedule shall be obtained from the Government at least 60 days prior to the start of the training.

SD-09 Reports

Commissioning Report; FIO;AR.

Six copies of the HVAC control system commissioning report, in indexed booklet form, within 30 days after completion of the system commissioning. The commissioning report shall include data collected during the HVAC control system commissioning and shall follow the format of the commissioning procedures. The commissioning report shall include all controller and time clock checksheets with final values listed for all parameters, setpoints, P, I, D setting constants, calibration data for all devices, and results of adjustments.

Performance Verification Test Report; FIO;AR.

Six copies of the HVAC control system performance verification test report, in indexed booklet form, within 30 days after completion of the test. The HVAC control system performance verification test report shall include data collected during the HVAC control system performance verification test. The original copies of data gathered during the performance verification test shall be turned over to the Government after Government approval of the test results.

Manufacturer's Recommendations; FIO;AR

Installation of controller to support weight for wall mounting.

SD-13 Certificates

ASME Air-Storage Tank Certificate; FIO;AR.

An ASME Air-Storage Tank Certificate for each storage tank.

SD-18 Records

Service Organizations; FIO;AR.

Six copies of a list of service organizations qualified to service the HVAC control system. The list shall include the service organization name, address, technical point of contact and telephone number, and contractual point of contact and telephone number.

SD-19 Operation and Maintenance Manuals

Operation Manual; FIO;AR.

Maintenance and Repair Manual; FIO;AR.

Six copies of the HVAC control system operation manual and HVAC control system maintenance and repair manual for each HVAC control system 30 days

before the date scheduled for the training course.

1.4 DELIVERY AND STORAGE

Products shall be stored with protection from the weather, humidity and temperature variations, dirt and dust, and other contaminants, within the storage-condition limits published by the equipment manufacturer. Dampers shall be stored so that seal integrity, blade alignment and frame alignment are maintained.

1.5 OPERATION MANUAL

An HVAC control system operation manual for each HVAC control system, in indexed booklet form, shall be provided. The operation manual shall include the HVAC control system sequence of operation, and procedures for the HVAC system start-up, operation and shut-down. The operation manual shall include as-built HVAC control system detail drawings. The operation manual shall include the as-built controller configuration checksheets, the as-built time clock configuration checksheet, the HVAC control system front panel description, the procedures for changing HVAC system controller setpoints, the procedures for gaining manual control of processes, the time clock manufacturer's manual control of processes, the time clock manufacturer's operation manual, and the controller manufacturer's operation manual.

a. The HVAC control system front panel description shall explain the meaning and use of the lights, switches, gauges, and controller displays located in the front panel. Each light, switch, gauge, and display described shall be numbered and referenced to a drawing of the front panel.

b. The procedures for changing HVAC system controller setpoints shall describe the step-by-step procedures required to change: the process variable setpoints of controllers, the alarm setpoints of controllers, the controller bias settings, and controller setpoint reset schedules.

c. The procedures for gaining manual control of processes shall describe step-by-step procedures required to gain manual control of devices and manually adjust their positions.

1.6 MAINTENANCE AND REPAIR MANUAL

An HVAC control system maintenance and repair manual for each HVAC control system, in indexed booklet form in hardback binders, shall be provided. The maintenance and repair manual shall include the routine maintenance checklist, a recommended repair methods list, a list of recommended maintenance and repair tools, the qualified service organization list, the as-built commissioning procedures and report, the as-built performance verification test procedures and report, and the as-built equipment data booklet (EDB).

a. The routine maintenance checklist shall be arranged in a columnar format. The first column shall list all devices listed in the equipment compliance booklet (ECB), the second column shall state the maintenance activity or state no maintenance required, the third column shall state the frequency of the maintenance activity, and the fourth column for additional comments or reference.

b. The recommended repair methods list shall be arranged in a columnar format and shall list all devices in the equipment compliance booklet (ECB) and state the guidance on recommended repair methods, either field repair, factory repair, or whole-item replacement.

c. The as-built equipment data booklet (EDB) shall include the equipment compliance booklet (ECB) and all manufacturer supplied user manuals and information.

d. If the operation manual and the maintenance and repair manual are provided in a common volume, they shall be clearly differentiated and separately indexed.

PART 2 PRODUCTS

2.1 MATERIAL AND EQUIPMENT

Material and equipment shall be standard products of a manufacturer regularly engaged in the manufacturing of such products which are of a similar material, design and workmanship. The standard products shall have been in satisfactory commercial or industrial use for 2 years prior to bid opening. The 2-year use shall include applications of equipment and materials under similar circumstances and of similar size. The 2 years experience must be satisfactorily completed by a product which has been sold or is offered for sale on the commercial market through advertisements, manufacturers' catalogs, or brochures. Products having less than a 2-year field service record will be acceptable if a certified record of satisfactory field operation, for not less than 6000 hours exclusive of the manufacturer's factory tests, can be shown. The equipment items shall be supported by a service organization. The Contractor shall submit a certified list of qualified permanent service organizations and qualifications. These service organizations shall be reasonably convenient to the equipment on a regular and emergency basis during the warranty period.

2.2 GENERAL EQUIPMENT REQUIREMENTS

2.2.1 Electrical and Electronic Devices

All electrical, electronic, and electro-pneumatic devices not located within an HVAC control panel shall have a NEMA Type 1 enclosure in accordance with NEMA 250 unless otherwise shown.

2.2.2 Standard Signals

The output of all analog transmitters and the analog input and output of all single-loop controllers and function modules shall be 4-to-20 mAdc signals. The signal shall originate from current-sourcing devices and shall be received by current-sinking devices.

2.2.3 Ambient Temperature Limits

Ambient Temperature Actuators and positive positioners, and transmitters shall operate within temperature limit ratings of 5 to 60 degrees C. All panel-mounted instruments shall operate within limit ratings of 2 to 50 degrees C and 10 percent to 95 percent relative humidity, noncondensing. All devices installed outdoors shall operate within limit ratings of minus

40 to plus 65 degrees C.

2.2.4 Nameplates, Lens Caps, and Tag Nameplates

Nameplates, lens caps, and lens caps bearing legends as shown and tags bearing device-unique identifiers as shown shall have engraved or stamped characters. A plastic or metal tag shall be mechanically attached directly to each device or attached by a metal chain or wire. Each air flow measurement station shall have a tag showing flow rate range for signal output range, duct size, and identifier as shown.

2.2.5 Controls/Power Wiring

Controls/power wiring required but not shown for, and not limited to, thermostats, controllers, variable frequency drive controls, equipment manufacturer control panels, dampers with motors, variable volume controls and motors, valves, sensing devices (temperature, pressure, humidity, level, flow, volume, on-off, fire alarm devices) and other mechanical equipment requiring control/power wiring shall be supplied and installed to provide a complete and usable facility. The Contracting Officer shall direct the Contractor which power panel to use to supply above controls unless otherwise indicated.

2.3 MATERIALS

2.3.1 Tubing

2.3.1.1 Copper

Copper tubing shall conform to ASTM B 88 and shall have sweat fittings and valves.

2.3.1.2 Plastic

Plastic tubing shall have barbed fittings and valves. Plastic tubing shall have the burning characteristics of linear low-density polyethylene tubing, shall be self-extinguishing when tested in accordance with ASTM D 635, shall have UL 94 V-2 flammability classification, and shall withstand stress cracking when tested in accordance with ASTM D 1693. Plastic-tubing bundles shall be provided with Mylar barrier and flame-retardant polyethylene jacket.

2.3.1.3 Stainless Steel

Stainless steel tubing shall conform to ASTM A 269, and shall have stainless steel compression fittings.

2.3.2 Wiring

2.3.2.1 Terminal Blocks

Terminal blocks shall be insulated, modular, feed-through, clamp style with recessed captive screw-type clamping mechanism, shall be suitable for rail mounting, and shall have end plates and partition plates for separation or shall have enclosed sides.

2.3.2.2 Control Wiring for 24-Volt Circuits

Control wiring for 24-volt circuits shall be 18 AWG minimum, stranded

copper and shall be rated for 300-volt service.

2.3.2.3 Wiring for 120-Volt Circuits

Wiring for 120-volt circuits shall be 18 AWG minimum, stranded copper and shall be rated for 600-volt service.

2.3.2.4 Analog Signal Wiring Circuits

Analog signal wiring circuits within control panels shall not be less than 20 AWG and shall be rated for 300-volt service.

2.3.2.5 Instrumentation Cable

Instrumentation cable shall be 18 AWG, stranded copper, single or multiple-twisted, minimum 51 mm lay of twist, 100 percent shielded pairs, and shall have a 300-volt insulation. Each pair shall have a 20 AWG tinned-copper drain wire and individual overall pair insulation. Cables shall have an overall aluminum-polyester or tinned-copper cable-shield tape, overall 20 AWG tinned-copper cable drain wire, and overall cable insulation.

2.3.2.6 Nonconducting Wiring Duct

Nonconducting wiring duct in control panels shall have wiring duct in control panels shall have slotted sides, snap-on duct covers, have slotted sides, snap-on duct covers, fittings for connecting ducts, mounting clips for securing ducts, and wire-retaining clips.

2.3.2.7 Transformers

Step-down transformers shall be utilized where control equipment operates at lower than line circuit voltage. Transformers, other than transformers in bridge circuits, shall have primaries wound for the voltage available and secondaries wound for the correct control circuit voltage. Transformers shall be sized so that the connected load is 80 percent of the rated capacity or less. Transformers shall conform to UL 508.

2.4 ACTUATORS

Actuators shall be pneumatic, electric or electronic as shown and shall be provided with mounting and connecting hardware. Actuators shall fail to their spring-return positions on signal or power failure, except that variable air volume (VAV) terminal unit actuators may be of the floating type. The actuator stroke shall be limited in the direction of power stroke by an adjustable stop. Actuators shall have a visible position indicator. Actuators shall smoothly open or close the devices to which they are applied and shall have a full stroke response time of 60 seconds or less. Electric or electronic actuators operating in series shall have an auxiliary actuator driver. Pneumatic actuators shall be rated for 172 kPa operating pressure except for high-pressure cylinder-type actuators. Electric actuators shall have an oil-immersed gear train. Electric actuators used in a sequencing application shall have zero and span adjustments.

2.4.1 Valve Actuators

Valve actuators shall be selected to provide a minimum of 125 percent of the motive power necessary to operate the valve over its full range of

operation.

2.4.2 Positive Positioners

Positive positioners are required for pneumatic actuators. Each positive positioner shall be a pneumatic relay with a mechanical feedback mechanism and an adjustable operating range and starting point.

2.5 AUTOMATIC CONTROL VALVES

2.5.1 Valve Assembly

Valves shall have stainless-steel stems and stuffing boxes with extended necks to clear the piping insulation. Unless otherwise stated, valves shall have globe style bodies. Valve bodies shall be designed for not less than 862 kPa working pressure or 150 percent of the system operating pressure, whichever is greater. Valve leakage rating shall be 0.01 percent of rated Cv.

2.5.2 Butterfly-Valve Assembly

Butterfly valves shall be threaded lug type suitable for dead-end service, and for modulation to the fully-closed position, with carbon-steel bodies and noncorrosive discs, stainless steel shafts supported by bearings, and EPDM seats suitable for temperatures from minus 29 to plus 120 degrees C. Valves shall have a manual means of operation independent of the actuator. The rated Cv for butterfly valves shall be the valve Cv at 70% open (60 degrees open).

2.5.3 Two-Way Valves

Two-way modulating valves shall have equal-percentage characteristics.

2.5.4 Three-Way Valves

Three-way valves shall provide linear flow control with constant total flow throughout full plug travel.

2.5.5 Duct-Coil and Terminal-Unit-Coil Valves

Control valves with either flare-type or solder-type ends shall be provided for duct or terminal-unit coils. Flare nuts shall be furnished for each flare-type end valve.

2.5.6 Valves for Chilled-Water

Bodies for valves 40 mm (1-1/2 inches) and smaller shall be brass or bronze, with threaded or union ends. Bodies for valves from 50 to 80 mm (2 to 3 inches) inclusive shall be of brass, bronze or iron. Bodies for 50 mm (2 inch) valves shall have threaded ends. Bodies for valves from 65 to 80 mm (2-1/2 to 3 inches) shall have flanged-end connections. Valve Cv shall be within 100 percent to 125 percent of the Cv shown. Internal valve trim shall be brass or bronze except that valve stems may be type 316 stainless steel. Valves 100 mm (4 inches) and larger shall be butterfly valves.

2.5.7 Valves for Hot-Water Service

Valves for hot-water service below 121 degrees C shall be as follows:

Bodies for valves 40 mm (1-1/2 inches) and smaller shall be brass or bronze, with threaded or union ends. Bodies for 50 mm (2 inches) valves shall have threaded ends. Bodies for valves from 50 to 80 mm (2 to 3 inches) inclusive shall be of brass, bronze, or iron. Bodies for valves 100 mm (4 inches) and larger shall be iron. Bodies for valves 65 mm (2-1/2 inches) and larger shall be provided with flanged-end connections. Valve Cv shall be within 100 percent to 125 percent of the Cv shown. Internal trim (including seats, seat rings, modulating plugs, and springs) of valves controlling water hotter than 99 degrees C shall be Type 316 stainless steel. Internal trim for valves controlling water 99 degrees C or less shall be brass or bronze. Nonmetallic parts of hot-water control valves shall be suitable for a minimum continuous operating temperature of 121 degrees C or 10 degrees C above the system design temperature, whichever is higher. Valves 100 mm (4 inches) is higher. Valves 100 mm (4 inches) and larger shall be butterfly valves.

2.6 DAMPERS

2.6.1 Damper Assembly

A single damper section shall have blades no longer than 1.2 m and shall be no higher than 1.8 m. Maximum damper blade width shall be 203 mm. Larger sizes shall be made from a combination of sections. Dampers shall be steel, or other materials where shown. Flat blades shall be made rigid by folding the edges. All blade-operating linkages shall be within the frame so that blade-connecting devices within the same damper section will not be located directly in the air stream. Damper axles shall be 13 mm (0.5 inch) (minimum) plated steel rods supported in the damper frame by stainless steel or bronze bearings. Blades mounted vertically shall be supported by thrust bearings. Pressure drop through dampers shall not exceed 10 Pa at 5 m/s in the wide-open position. Frames shall not be less than 50 mm in width. Dampers shall be tested in accordance with AMCA 500.

2.6.1.1 Operating Links

Operating links external to dampers (such as crankarms, connecting rods, and line shafting for transmitting motion from damper actuators to dampers) shall withstand a load equal to at least twice the maximum required damper-operating force. Rod lengths shall be adjustable. Links shall be brass, bronze, zinc-coated steel, or stainless steel. Working parts of joints and clevises shall be brass, bronze, or stainless steel. Adjustments of crankarms shall control the open and closed positions of dampers.

2.6.1.2 Damper Types

Dampers shall be parallel blade type.

2.6.2 Outside-Air, Return-Air, and Relief-Air Dampers

The dampers shall be provided where shown. Blades shall have interlocking edges and shall be provided with compressible seals at points of contact. The channel frames of the dampers shall be provided with jamb seals to minimize air leakage. Dampers shall not leak in excess of 102 L/s per square meter at 1,000 Pa (gauge) static pressure when closed. Seals shall be suitable for an operating temperature range of minus 40 to plus 93 degrees C. Dampers shall be rated at not less than 10 m/s air velocity.

2.6.3 Mechanical and Electrical Space Ventilation Dampers

The dampers shall be as shown. Dampers shall not leak in excess of 406 L/s per square meter at 1,000 Pa (gauge) static pressure when closed. Dampers shall be rated at not less than 7.8 m/s air velocity.

2.6.4 Smoke Dampers

Smoke-damper and actuator assembly required per NFPA 90A shall meet the Class II leakage requirements of UL 555S. Dampers shall be rated at not less than 10 m/s air velocity.

2.6.5 Damper End Switches

Each end switch shall be a hermetically-sealed switch with a trip lever and over-travel mechanism. The switch enclosure shall be suitable for mounting on the duct exterior and shall permit setting the position of the trip lever that actuates the switch. The trip lever shall be aligned with the damper blade.

2.7 INSTRUMENTATION

2.7.1 Measurements

Transmitters shall be factory calibrated to provide an output of 4 to 20 mAdc over the indicated ranges:

a. Conditioned space temperature, from 10 to 30 degrees C.

b. Duct temperature, from 5 to 60 degrees C except that return-air temperature for economizer operation shall be minus 35 to plus 55 degrees C.

c. Chilled-water temperature, from minus 1 to plus 38 degrees C.

d. Heating hot-water temperature, from 38 to 121 degrees C.

e. Outside-air temperature, from minus 35 to plus 55 degrees C.

f. Relative humidity, 0 to 100 percent for space and duct high-limit applications.

g. Differential pressure for VAV supply-duct static pressure from 0 to 500 Pa (gauge).

h. Pitot-tube air-flow measurement station and transmitter, from 0 to 25 Pa (gauge) for flow velocities of 3.5 to 6 m/s, 0 to 60 Pa (gauge) for velocities of 3.5 to 9 m/s, or 0 to 125 Pa (gauge) for velocities of 3.5 to 13 m/s.

i. Electronic air-flow measurement station and transmitter, from 0.6 to 13 m/s.

2.7.2 Temperature Instruments

2.7.2.1 Resistance Temperature Detectors (RTD)

Temperature sensors shall be 100 ohms 3- or 4-wire RTD. Each RTD shall be platinum with a tolerance of plus or minus 0.1 percent at 0 degrees C, and

shall be encapsulated in epoxy, series 300 stainless steel, anodized aluminum, or copper. Each RTD shall be furnished with an RTD transmitter as specified, integrally-mounted unless otherwise shown.

2.7.2.2 Continuous-Averaging RTD

Continuous-averaging RTDs shall have a tolerance of plus or minus 0.5 degree C at the reference temperature, and shall be of sufficient length to ensure that the resistance represents an average over the cross-section in which it is installed. The sensing element shall have a bendable copper sheath. Each averaging RTD shall be furnished with an RTD transmitter as specified, to match the resistance range of the averaging RTD.

2.7.2.3 RTD Transmitter

The RTD transmitter shall accept a 3-wire 100 ohm RTD input. The transmitter shall be a 2-wire, loop-powered device. The transmitter shall produce a linear 4-to-20 mAdc output corresponding to the required temperature measurement. The output error shall not exceed 0.1 percent of the calibrated span. The transmitter shall include offset and span adjustments.

2.7.3 Relative-Humidity Instruments

A relative-humidity instrument for indoor application shall have a measurement range from 0 to 100 percent relative-humidity and be rated for operation at ambient air temperatures within the range of minus 4 to plus 55 degrees C. It shall be capable of being exposed to a condensing air stream (100 percent RH) with no adverse effect to the sensor's calibration or other harm to the instrument. The instrument shall be of the wall-mounted or duct-mounted type, as required by the application, and shall be provided with any required accessories. Instruments used in duct high-limit applications shall have a bulk polymer resistive sensing element. Duct-mounted instruments shall be provided with a duct probe designed to protect the sensing element from dust accumulation and mechanical damage. The instrument (sensing element and transmitter) shall be a 2-wire, loop-powered device and shall have an accuracy of plus or minus 3 percent of full scale within the range of 20 to 80 percent relative humidity. The instrument shall have a typical long-term stability of 1 percent or less drift per year. The transmitter shall convert the sensing element's output to a linear 4-20 mAdc output signal in proportion to the measured relative-humidity value. The transmitter shall include offset and span adjustments.

2.7.4 Electronic Air-Flow-Measurement Stations and Transmitters

2.7.4.1 Stations

Each station shall consist of an array of velocity sensing elements and an air-flow straightener. Air-flow straighteners shall be contained in a flanged sheet-metal or aluminum casing. The velocity sensing elements shall be of the RTD or thermistor type, producing a linear output. The sensing elements shall be distributed across the duct cross-section in the quantity and pattern specified by the published installation instructions of the station manufacturer. The resistance to airflow through the air-flow measurement station shall not exceed 20.0 Pa at an air-flow of 10 m/s. Station construction shall be suitable for operation at air-flows of up to 25.3 m/s over a temperature range of 4.4 to 49 degrees C, and accuracy shall be plus or minus 3 percent over a range of 0.6 to 13 m/s.

In outside-air measurement or in low-temperature air delivery applications, the station shall be certified by the manufacturer to be accurate as specified over a temperature range of minus 30 to plus 50 degrees C. In outside-air measurement applications, the air-flow straightener shall be constructed of 3.175 mm (1/8 inch) aluminum honeycomb and the depth of the straightener shall not be less than 40 mm.

2.7.4.2 Transmitters

Each transmitter shall produce a linear, temperature compensated 4-to-20 mAdc output corresponding to the required velocity measurement. The output error of the transmitter shall not exceed 0.5 percent of the calibrated measurement. Each transmitter shall have offset and span adjustments.

2.7.4.3 Stations

a. At the option of the Contractor, velocity sensing elements specially designed for use at fan inlets may be used. The velocity sensing element shall be of the RTD or Thermister Type with linearizing means.

b. Performance shall be suitable for installation in the supply and/or return sections of a roof top variable volume air handling unit for a temperature environment of -17.8 degrees C to 48 degres C or can be located in an accessible ceiling space or heated (provided by Contractor) supply or return section of the roof top air handling unit.

c. Each air flow station shall be provided with required support, mounting plate, and signal fittings suitable for installation at fan inlet and installed as recommended by the manufacturer.

2.7.5 Pitot-Tube Air-Flow-Measurement Stations and Transmitters

2.7.5.1 Pitot-Tube Type Stations

Each station shall contain an array of velocity sensing elements and straightening vanes inside a flanged sheet-metal casing. The velocity sensing elements shall be of the multiple pitot-tube type with averaging manifolds. The sensing elements shall be distributed across the duct cross-section in the quantity and pattern specified by the published installation instructions of the station manufacturer. The resistance to air flow through the air-flow-measurement station shall not exceed 20 Pa at an air flow of 10 m/s. Station construction shall be suitable for operation at air flows of up to 25.3 m/s over a temperature range of 4.4 to 49 degrees C, and accuracy shall be plus or minus 3 percent over a range of 3.5 to 13 m/s. This device will not be used if the required velocity measurement is below 3.5 m/s or for outside air flow measurements.

2.7.5.2 Pitot-Tube Type Transmitters

Each transmitter shall produce a linear 4-to-20 mAdc output corresponding to the required velocity pressure measurement. Each transmitter shall have a low-range differential-pressure sensing element and a square-root extractor. Sensing element accuracy shall be plus or minus 1 percent of full scale, and overall transmitter accuracy shall be plus or minus 0.25 percent of the calibrated measurement. Each transmitter shall have offset and span adjustments.

2.7.6 Differential Pressure Instruments

The instrument shall be a pressure transmitter with an integral sensing element. The instrument over pressure rating shall be 300 percent of the operating pressure. The sensor/transmitter assembly accuracy shall be plus or minus 2 percent of full scale. The transmitter shall be a 2-wire, loop-powered device. The transmitter shall produce a linear 4-to-20 mAdc output corresponding to the required pressure measurement. Each transmitter shall have offset and span adjustments.

2.7.7 Thermowells

Thermowells shall be Series 300 stainless steel with threaded brass plug and chain, 50 mm lagging neck and extension-type well, and inside diameter and insertion length as required for the application.

2.7.8 Sunshields

Sunshields for outside-air temperature sensing elements shall prevent the sun from directly striking the temperature sensing elements. The sunshields shall be provided with adequate ventilation so that the sensing element responds to the ambient temperature of the surroundings. The top of each sunshield shall have a galvanized-metal rainshield projecting over the face of the sunshield. The sunshields shall be painted white or shall be unpainted aluminum.

2.8 THERMOSTATS

Thermostat ranges shall be selected so that the setpoint is adjustable between plus or minus 5 degrees C of the setpoint shown. Thermostats shall be electronic or electric.

2.8.1 Nonmodulating Room Thermostats

Contacts shall be single-pole double-throw (SPDT), hermetically sealed, and wired to identified terminals. Maximum differential shall be 2.75 degrees C. Room thermostats shall be enclosed with separate locking covers (guards). Thermostats shall have manual switches as required by the application.

2.8.2 Microprocessor-Based Room Thermostats

Microprocessor-based thermostats shall have built-in keypads for scheduling of day and night temperature settings. When out of the scheduling mode, thermostats shall have continuous display of time, with AM and PM indicator, continuous display of day of week, and either continuous display of room temperature with display of temperature setpoint on demand, or continuous display of temperature setpoint with display of room temperature on demand. In the programmable mode, the display shall be used for interrogating time program ON-OFF setpoints for all 7 days of the week. The time program shall allow 2 separate temperature-setback intervals per day. The thermostats shall have a means for temporary and manual override of the program schedule, with automatic program restoration on the following day. Thermostats shall have a replaceable battery to maintain the timing and maintain the schedule in memory for 1 year in the event of a power outage. Maximum differential shall be 1 degree C.

2.8.3 Modulating Room Thermostats

Modulating room thermostats shall have either one output signal, two output signals operating in unison, or two output signals operating in sequence, as required for the application. Each thermostat shall have an adjustable throttling range of 2 to 4 degrees C for each output. Room thermostats shall be enclosed with separate locking covers (guards).

2.8.4 Nonmodulating Capillary Thermostats and Aquastats

Each thermostat shall have a capillary length of at least 1.5 meters,, shall have adjustable direct-reading scales for both setpoint and differential, and shall have a differential adjustable from 3 to 9 degrees C. 6 to 16 degrees F. Aquastats shall be of the strap-on type, with 5 degrees C 10 degrees F fixed differential.

2.8.5 Low-Temperature-Protection Thermostats

Low-temperature-protection thermostats shall be, low-temperature safety thermostats, with NO and NC contacts and manual reset, with an element length of 6 meters, which shall respond to the coldest 460 mm segment.

2.8.6 Modulating Capillary Thermostats

Each thermostat shall have either one output signal, two output signals operating in unison, or two output signals operating in sequence, as required for the application. Thermostats shall have adjustable throttling ranges of 2 to 4 degrees C for each output.

2.9 PRESSURE SWITCHES AND SOLENOID VALVES

2.9.1 Pressure Switches

Each switch shall have an adjustable setpoint with visible setpoint scale. Range shall be as shown. Differential adjustment shall span 20 to 40 percent of the range of the device.

2.9.2 Differential-Pressure Switches

Each switch shall be an adjustable diaphragm-operated device with two SPDT contacts, with taps for sensing lines to be connected to duct pressure fittings designed to sense air pressure. These fittings shall be of the angled-tip type with tips pointing into the air stream. The setpoint shall not be in the upper or lower quarters of the range and the range shall not be more than three times the setpoint. Differential shall be a maximum of 35 Pa at the low end of the range and 85 Pa at the high end of the range.

2.9.3 Pneumatic Electric (PE) Switches

Each switch shall have an adjustable setpoint range of 20 to 140 kPa with a switching differential adjustable from 15 to 35 kPa. The switch action shall be SPDT.

2.9.4 Solenoid-Operated Pneumatic (EP) Valves

Each valve shall have three-port operation: common, normally open, and normally closed. Each valve shall have an outer cast-aluminum body and internal parts of brass, bronze, or stainless steel. The air connection shall be a 10 mm (3/8 inch) NPT threaded connection. Valves shall be rated for 345 kPa when used in a control system that operates at 172 kPa

or less, or 1035 kPa when used in a control system that operates in the range of 172 to 690 kPa.

2.10 INDICATING DEVICES

2.10.1 Thermometers

2.10.1.1 Piping System Thermometers

Piping system thermometers shall have brass, malleable iron or aluminum alloy case and frame, clear protective face, permanently stabilized glass tube with indicating-fluid column, white face, black numbers, and a 230 mm scale. Thermometers for piping systems shall have rigid stems with straight, angular, or inclined pattern.

2.10.1.2 Piping System Thermometer Stems

Thermometer stems shall have expansion heads as required to prevent breakage at extreme temperatures. On rigid-stem thermometers, the space between bulb and stem shall be filled with a heat-transfer medium.

2.10.1.3 Non-Averaging Air-Duct Thermometers

Air-duct thermometers shall have perforated stem guards and 45-degree adjustable duct flanges with locking mechanism.

2.10.1.4 Averaging Air-Duct Thermometers

Averaging thermometers shall have a 90 mm (nominal) dial, with black legend on white background, and pointer traveling through a 270-degree arc.

2.10.1.5 Accuracy

Thermometers shall have an accuracy of plus or minus 1 percent of scale range. Thermometers shall have a range suitable for the application.

2.10.2 Pressure Gauges

Gauges shall be 50 mm (nominal) size, back connected, suitable for field or panel mounting as required, shall have black legend on white background, and shall have a pointer traveling through a 270-degree arc. Accuracy shall be plus or minus 3 percent of scale range. Gauges shall meet requirements of ASME B40.1.

2.10.2.1 Pneumatic Actuator Gauges

Field mounted gauges for indicating signal input to pneumatic actuators shall have a scale of 0 to 200 kPa with 10 kPa graduations.

2.10.2.2 Air Storage Tank, Filter, and Dryer Gauges

Gauges for air storage tanks, or for use before and after dryers or dirt and oil filters, shall have a scale of 0 to 1100 kPa with 20 kPa graduations.

2.10.2.3 Hydronic-System Gauges

Gauges for hydronic-system applications shall have ranges and graduations as shown.

2.10.2.4 Control Panel Pressure Gauges

Panel mounted air pressure gauges shall have a scale of 0 to 200 kPa with 10 kPa graduations.

2.10.3 Low Differential Pressure Gauges

Gauges for low differential-pressure measurements shall be a minimum of 90 mm (nominal) size with two sets of pressure taps, and shall have a diaphragm-actuated pointer, white dial with black figures, and pointer zero adjustment. Gauges shall have ranges and graduations as shown. Accuracy shall be plus or minus 2 percent of scale range.

2.11 SINGLE-LOOP CONTROLLERS

2.11.1 Controller Features

The controller shall be a microprocessor-based single-loop device that does not require Contractor generated software. The controller shall be mountable in a panel cutout measuring 92 by 92 mm. The controller shall have field scalable process variable, a remote setpoint analog input and an analog output with adjustable high and low end limits and proportional control manual reset adjustment. The analog output shall result from proportional, integral and derivative (PID) control. The analog output shall be configurable as direct acting and reverse acting. The controller shall have keyboard, display, auto/manual selection for control of its analog output, remote setpoint adjustment/local setpoint adjustment selection with adjustable high-end and low-end limits, ratio and bias adjustments on remote setpoint input, operator-initiated self-tune/manual-tune selection, anti-reset wind-up feature, and 2 independent SPDT contact-closure outputs (PV alarm and deviation alarm). The controller shall be configurable to power-up in automatic with local setpoint control and in automatic with remote setpoint control. The range of hysteresis adjustment shall be not smaller than from 1 percent to 5 percent of process variable input span. The controller shall power the analog output loop to 20 milliamperes when connected to a load of 600 ohms. The controller shall be capable of retransmitting the process variable to 20 milliamperes when connected to 600 ohms. The controller shall have 5-year battery backup to store operating parameters or shall have nonvolatile memory.

2.11.2 Parameter Input and Display

Control parameters shall be entered and displayed directly, in the correct engineering units, through a series of keystrokes on a front-panel display with a 3-1/2 digit, 7-segment display, with decimal point and polarity indication. The use of this display shall allow manual interrogation of setpoint, mode constants, and values of the process variable and output.

2.11.3 Controller Electrical Requirements

Each controller shall be powered by 120 volts ac. Power consumption shall not be greater than 25 watts. Each controller shall provide electrical noise isolation between the ac power line and the process variable input, remote setpoint input, and output signals and of not less than 100 db at 60 Hz common-mode rejection ratio, and not less than 60 db at 60 Hz normal-mode rejection ratio.

2.11.4 Controller Accuracy

The controller shall have an accuracy of plus or minus 0.30 percent of input span, plus or minus 1 digit.

2.11.5 Self-Tuning

The controller self-tuning operation shall apply proportional, integral, and derivative modes of control and shall modify the mode constants as required. Self-tuning shall only be in operation when selected from the front panel.

2.11.6 Manual-Tuning

The controller manual-tuning operation shall provide proportional, integral, and derivative control modes, or any combination thereof, by means of individual mode constant adjustments. These adjustments shall be set for the appropriate value if a particular control mode action is desired, or to zero if that particular mode is not desired. The proportional-mode constant shall be adjustable from 0 to 200 percent of input signal range, the integral-mode constant shall be adjustable from 0 to 20 repeats per minute, and derivative-mode constant shall be adjustable from 0 to 5 minutes.

2.12 CONTROL DEVICES AND ACCESSORIES

Control device and accessory input impedance shall not exceed 250 ohms.

2.12.1 Function Modules

Function modules shall accept mAdc analog input signals to produce mAdc analog output signals or contact output signals. Modules shall have zero and span adjustments for analog outputs, and setpoint adjustments for contact outputs. Module output span accuracy shall be plus or minus 1 percent of input span. Modules shall be rail-mounted as shown. Power consumption shall be not greater than 5 watts.

2.12.1.1 Minimum-Position Switch and Temperature-Setpoint Device

Minimum-position switch and temperature-setpoint device shall accept a 1000 ohms potentiometer input and shall produce a steady analog output. In temperature setpoint applications the potentiometer shall be single-turn, suitable for wall mounting, enclosed in a locking metal or heavy duty plastic enclosure and shall have a graduated dial corresponding to the range of the setpoint adjustment. In a minimum position switch application the potentiometer shall be mounted on or internal to the minimum position switch. The device shall have its input signal electrically or optically isolated from output. Mounting socket shall be an 8 pin base with pins 1, 2, 3 ac power input, 4, 5, 6 input signal, 7, 8, output signal.

2.12.1.2 Signal-Inverter Modules

Signal inverter shall accept an analog input signal and shall have sufficient output capacity to drive the output signal through a circuit with an impedance of not less than 600 ohms. The output shall be electrically isolated from the input and the device shall have a moisture resistant coating. Mounting socket shall be an 8 pin base with pins 1, 2, 3 ac power input, 4, 5, 6 input signal, 7, 8, output signal.

2.12.1.3 High-Low Signal Selector

High-low signal-selector modules shall accept analog input signals and select either the highest or the lowest input signal as the output signal. The signal selector shall be powered by 120 Vac and the output signal shall be electrically isolated from the input signal.

2.12.1.4 Sequencer Modules (Dual Limit Alarm)

Sequencer modules (dual limit alarms) shall accept an analog input signal and shall provide two contact closure outputs. Each output shall have an adjustable independent contact setpoint with an adjustable switching differential range between 1 percent and 100 percent of the input span. The setpoint shall be adjustable between 0 percent and 100 percent of the input span. Setpoint and switching differential (deadband) adjustment potentiometers shall be internal, top-accessed potentiometers or screws. Sequencers shall return all contacts to their zero input signal condition when power is interrupted. The device shall have moisture resistant coating.

2.12.1.5 Loop Driver Modules

Loop driver module shall accept an analog input signal and shall have a circuit input impedance not greater than 100 ohms. The loop driver module shall have sufficient output capacity to drive the output signal through a circuit with an impedance range of not less than 1000 ohms. The output shall be electrically isolated from the input and the device shall have moisture resistant coating. Mounting socket shall be an 8 pin base with pins 1, 2, 3 ac power input, 4, 5, 6 input signal, 7, 8 output signal.

2.12.2 Relays

Relays shall be 2-pole, double-throw (2PDT) with a 10-ampere resistive rating at 120 Vac, and shall have an enclosed 120-Vac coil with 8 pin blade connectors, and a matching rail-mounted socket. Power consumption shall not be greater than 3 watts.

2.12.3 Time-Delay Relays

Time delay relays shall be 2PDT with 8 pin connectors, dust cover, and a matching rail-mounted socket. Adjustable timing range shall be 0 to 5 minutes. Power consumption shall be not greater than 3 watts.

2.12.4 Time Clocks

Each time clock shall be a 365-day programmable timing device with 4 independently timed circuits. Each clock shall have a manual scheduling keypad and an alphanumeric display of all timing parameters. Timing parameters shall include: date in Gregorian calendar for month, day and day-of-month indication; and 24-hour time-of-day display, with one-minute resolution for programming the ON and OFF times for each circuit. Each clock shall allow programming of each circuit for 12 holiday periods for either ON or OFF events for any selected duration of the 365-day program. Each clock shall have capacity for programming 4 ON events and 4 OFF events per day for each circuit. The programmed events shall be assignable to a 365-day schedule. Each clock shall have automatic Standard Time and Daylight Saving Time adjustment, by input of the appropriate dates. Each time clock shall have automatic leap year correction. Each clock shall be provided with 4-day battery backup. Power consumption shall not be greater

than 10 watts.

2.12.5 Current-to-Pneumatic (IP) Transducers

The transducers shall be 2-wire current-to-pressure transmitters that convert a 4-to-20 mAdc input signal to a 21 to 103 kPa, or a 103 to 21 kPa, pneumatic output, with a conversion accuracy of plus or minus 2 percent of full scale, including linearity and hysteresis. Input impedance shall not exceed 250 ohms. Air consumption shall not be greater than 0.12 L/s.

2.12.6 Direct Current (DC) Power Supply

One DC power supply shall be used to power all transmitters connected to the control panel. The power supply shall be 24 Vdc at not less than 1.2 amperes, with a peak-to-peak ripple not to exceed 0.03 percent of output voltage. Each power supply shall have a fused input, and shall be protected from voltage surges and powerline transients. The power supply output shall be protected against overvoltage and short circuits.

2.12.7 Power Line Conditioner (PLC)

PLCs shall be furnished for each controller panel. The PLCs shall provide both voltage regulation and noise rejection. The PLCs shall be of the ferro-resonant design, with no moving parts and no tap switching, while electrically isolating the secondary from the power line side. The PLCs shall be sized for 125 percent of the actual connected kva load. Characteristics of the PLC shall be as follows:

a. At 85 percent load, the output voltage shall not deviate by more than plus or minus 1 percent of nominal voltage when the input voltage fluctuates between minus 20 percent to plus 10 percent of nominal voltage.

b. During load changes of zero to full load, the output voltage shall not deviate by more than plus or minus 3 percent of nominal voltage. Full correction of load switching disturbances shall be accomplished within 5 cycles, and 95 percent correction shall be accomplished within 2 cycles of the onset of the disturbance.

c. Total harmonic distortion shall not exceed 3-1/2 percent at full load.

2.13 PILOT LIGHTS AND MANUAL SWITCHES

Pilot lights and switches shall be rectangular devices arranged in a horizontal matrix as shown. Momentary switches shall be non-illuminated. Interlocking switches shall have separately illuminated sections. Split legend lights shall have separately illuminated sections. Device illumination shall be by light-emitting diode or neon lamp.

2.14 HVAC SYSTEM CONTROL PANELS

2.14.1 Panel Assembly

The control panel shall be factory assembled and shipped to the job site as a single unit. The panel shall be fabricated as shown, and the devices shall be mounted as shown. Each panel shall be fabricated as a bottom-entry connection point for control-system electric power, control-system main air source, control-system wiring, pneumatic tubing,

interconnection of control systems, interconnection of starters and external shutdown devices, and energy monitoring and control systems (EMCS) interface. Each panel shall have an operating temperature rise of not greater than 11 degrees C above an ambient temperature of 38 degrees C.

2.14.2 Panel Electrical Requirements

Each control panel shall be powered by nominal 120 volts ac, fused at 5 amps, terminating at the panel on terminal blocks. Instrument cases shall be grounded. Interior panel, interior door, and exterior panel enclosure shall be grounded.

2.14.3 Enclosure

The enclosure for each panel shall be a NEMA 12 single-door wall-mounted box conforming to NEMA 250, with continuous hinged and gasketed exterior door with print pocket and key lock, continuous hinged interior door, interior back panel, and ventilation louvers in back surface as shown. Inside finish shall be white enamel, and outside finish shall be gray primer over phosphatized surfaces.

2.14.4 Mounting and Labeling

Controllers, pilot lights, switches, IP's, and pressure gauge shall be mounted on the interior door as shown. Power conditioner, fuses and duplex outlet shall be mounted on the interior of the cabinet as shown. All other components housed in the panel shall be mounted on the interior back panel surface of the enclosure, behind the door on rails as shown. Controllers and gauges mounted on the front of the inner door shall be identified by a plastic or metal nameplate as shown that is mechanically attached to the panel. Function modules, relays, timeclocks, IP transducers, DC power supply, and other devices interior to the panel shall be identified by a plastic or metal nameplate that is mechanically attached to the panel. The nameplate shall have the inscription as shown. Lettering shall be cut or stamped into the nameplate to a depth of not less than 0.4 mm, and shall show a contrasting color, produced by filling with enamel or lacquer or by the use of a laminated material. Painting of lettering directly on the surface of the interior door or panel is not permitted.

2.14.5 Wiring and Tubing

2.14.5.1 Current-to-Pneumatic Transducers (IP)

Current-to-pneumatic transducers (IP) shall be piped to bulkhead fittings in the bottom of the panel with a 50 mm loop to accommodate IP replacement and shall be wired to identified terminal blocks.

2.14.5.2 PaneL Wiring

Interconnections Wiring shall be installed in wiring ducts in such a way that devices can be added or replaced without disturbing wiring that is not affected by the change. Wiring to all devices shall have a 100 mm wiring loop in the horizontal wiring duct at each wiring connection. There shall be no wiring splices within the control panel. All interconnections required for power or signals shall be made on device terminals or panel terminal blocks, with not more than two wires connected to a terminal.

2.14.5.3 Panel Terminal Blocks

Terminal blocks shall be arranged in groups as shown. Instrument signal grounds at the same ground reference level shall end at a grounding terminal for connection to a common ground point. Wiring-shield grounds at the same reference level shall end at a grounding terminal for connection to a common ground point. Grounding terminal blocks shall be identified by reference level.

2.14.5.4 Wiring Identification

All wiring connected to controllers, time clocks and function modules shall be identified by function and polarity with full word identifiers, i.e., process variable input, remote setpoint input and control output.

2.14.6 EMCS Terminal Blocks

Terminal blocks shall be provided for connections to EMCS as shown. Analog signals shall require only the removal of jumpers to interface to EMCS.

2.15 COMPRESSED-AIR STATIONS

2.15.1 Air-Compressor Assembly

The air compressor shall be a high-pressure compressing unit with electric motor. The compressor shall be equipped with a motor with totally enclosed belt guard, an operating-pressure switch, safety-relief valves, gauges, intake filter and intake silencer, and combination type magnetic starter with undervoltage protection and thermal-overload protection for each phase, and shall be supported by a steel base mounted on an air storage tank. The air compressor shall provide the compressed air required for control operation while operating not more than one-third of the time. The air storage tank shall be fabricated for a working pressure of not less than 1380 kPa, and constructed and certified in accordance with ASME BPV VIII Div 1. The tank shall be of sufficient volume so that no more than six compressor starts per hour are required with the starting pressure switch differential set at 140 kPa. The tank shall be provided with an automatic condensate drain trap with manual override feature.

2.15.2 Compressed-Air Station Specialties

2.15.2.1 Refrigerated Dryer, Filters and, Pressure Regulator

A refrigerated dryer shall be provided in the air outlet line of the air storage tank. The dryer shall be of the size required for the full delivery capacity of the compressor. The air shall be dried at a pressure of not less than 483 kPa to a temperature not greater than 2 degrees C. The dryer shall be provided with an automatic condensate drain trap with manual override feature. The refrigerant used in the dryer shall be one of the fluorocarbon gases and have an Ozone Depletion Potential of not more than 0.05. A 5 micron prefilter and coalescing-type 0.03 micron oil removal filter with shut-off valves shall be provided in the dryer discharge. Each filter bowl shall be rated for 1034 kPa maximum working pressure. A pressure regulator, with high side and low side pressure gauges, and a safety valve shall be provided downstream of the filter. Pressure regulators of the relieving type shall not be used.

2.15.2.2 Flexible Pipe Connections

The flexible pipe connectors shall be designed for 1034 kPa and 121 degrees C service, and shall be constructed of rubber, tetrafluoroethylene

resin, or braided corrosion-resistant steel, bronze, monel, or galvanized steel. The connectors shall be suitable for the service intended and may have threaded or soldered ends. The length of the connectors shall be as recommended by the manufacturer for the service intended.

2.15.2.3 Vibration-Isolation Units

The vibration-isolation units shall be standard products with published loading ratings, and shall be single rubber-in-shear, double rubber-in-shear, or spring type.

2.15.2.4 Compressed Air Piping

Control air delivered to the system shall conform to ISA S7.3. Air lines for pneumatic controls shall be seamless copper tubing or nonmetallic tubing. Copper tubing shall be hard-drawn in exposed areas and either hard-drawn or annealed in concealed areas. Only tool-made bands shall be used. Fittings for copper tubing shall be brass or copper solder joint type except at connections to apparatus, where fittings shall be brass compression type. Nonmetallic tubing shall be compounded from polyethylene, meeting the stress crack test of ASTM D 1693. Nonmetallic individual tube polyethylene or multitube instrument tubing bundle shall be classified as flame retardant under UL 94. The polyethylene material shall be rated as self-extinguishing when tested in accordance with ASTM D 635. Air lines concealed in walls shall be hard-drawn copper tubing or nonmetallic tubing in rigid conduit. Terminal single lines shall be hard-drawn copper tubing, except when the run is less than 300 mm in length, flexible polyethylene may be used. Nonmetallic tubing will not be used for applications where the tubing could be subjected to a temperature exceeding 55 degrees C. Fittings for nonmetallic tubing shall be for instrument service and may be brass or acetal resin of the compression or barbed push-on type.

2.16 ELECTRONIC VARIABLE AIR VOLUME (VAV) TERMINAL UNIT CONTROLS

2.16.1 VAV Terminal Units

The VAV terminal units shall be as specified in Section 15895 AIR SUPPLY, DISTRIBUTION, VENTILATION, AND EXHAUST SYSTEM. All VAV terminal box controllers associated with an AHU shall be networked together such that configuration parameters for any controller may be monitored and modified from the controller of any other terminal unit served by the same AHU.

2.16.2 Terminal-Unit Controls

2.16.2.1 Box Control Device

Controls for pressure independent boxes shall consist of a velocity-sensing device in the primary air entering the box, a room temperature sensing element, a damper actuator, and an adjustable microprocessor-based VAV box controller. Each controller shall operate a damper for cooling and heating and a duct coil for heating. Terminal unit controls shall meet the requirements of UL 916 and 47 CFR 15.

2.16.2.2 Communication and Programming Device

One hand-held communication and programming device with instruction manual, plus one additional hand-held communicating device and instruction manual per 100 terminal units, shall be provided. The communication and

programming device shall connect to the controller directly or to a jack at the room-temperature-sensing element location. The communication and programming device shall be used to read and set minimum velocity, maximum velocity, heating setpoint, and cooling setpoint, and to read velocity and space temperature.

2.17 VARIABLE SPEED CONTROLLERS

Provide variable torque, constant volts/Hz adjustable frequency variable speed controls with shielded isolation transformer suitable for single motor drive, compatible with the motors to be driven:

2.17.1 Services

Provide the services of the controller manufacturer's service engineer to coordinate the installation and start up the drive package to ensure proper application of the motors to the control and proper application of the drive package to the driven loads, and instruct personnel designated by the Contracting Officer for 8 hours in proper operation and maintenance.

2.17.2 Mounting the Adjustable Frequency Controller

Mount the adjustable frequency controller, including all components, except the isolation, in a common NEMA 1 enclosure requiring front access only unless indicated otherwise. Isolate high voltage components within the enclosure with steel covers.

2.17.3 Standards and Regulations

The complete controller package shall be UL listed and shall comply with current standards of ANSI, IEEE, NEMA, NEC and all applicable State and local regulations.

2.17.4 Experience

Manufacturer shall have a minimum of 5 years experience in the design, construction and application of adjustable frequency controllers.

2.17.5 Materials and Equipment List

Submit with Materials and Equipment list, Adjustable Frequency Controller manufacturer and name of local service organization which can provide 24-hour complete system service and which stocks spare parts for theiis equipment.

2.17.6 AHUs Controller

Controller for AHUs (supply and return fans) shall be suitable for continuous operation at ambient temperatures from 0 degrees C to 40 degrees C, altitude up to 1000 meters, relative humidity from 5 to 90 percent with A-C line variation of 10 percent voltage and plus or minus 3 percent frequency. Units to be located in electrical closets as indicated.

2.17.7 Stepless Motor Control

The controller shall provide an adjustable AC voltage and frequency output for stepless motor control from 10% to 105% of base speed. Control functions and user interface functions shall be completely isolated from all line voltage components by protective barriers.

2.17.8 Drives

The variable speed drive shall have a minimum efficiency of 93 percent and a minimum input power factor of 0.90 at full load, 60 Hz.

2.17.9 Cabinet Doors Mounted Controls

Mount operator controls on the door of the cabinet including hand-off-automatic switch, start-stop (reset) switch, manual bypass switch and a manual speed control. In automatic mode, controller shall follow and external signal as required by the system, and respond to remote start-stop contact wired to terminal strip.

2.17.10 Harmonic Levels

Maximum allowable harmonic levels imposed by the variable frequency speed controller shall be limited in accordance with the requirements of IEEE Standard 519-92.

2.17.11 Manufacturer's Recommendations

Install controller in accordance with manufacturer's recommendations. For wall mounted controllers the Contractor shall submit for approval a proposal to support the weight of the controller.

2.17.12 Training

On-site owner training shall be provided for all controllers and shall include system concepts, basic operating instructions and basic troubleshooting instructions. The duration of the training shall be not less than 8 hours during the normal business day.

2.17.13 Service Engineers

Service engineers used to provide start-up service and owner's instructions shall be employed by the manufacturer.

PART 3 EXECUTION

3.1 GENERAL INSTALLATION CRITERIA

The HVAC control system shall be installed and ready for operation, as specified and shown. Dielectric isolation shall be provided where dissimilar metals are used for connection and support. Penetrations through and mounting holes in the building exterior shall be made watertight. The HVAC control system installation shall provide clearance for control system maintenance by maintaining access space between coils, access space to mixed-air plenums, and other access space required to calibrate, remove, repair, or replace control system devices. The control system installation shall not interfere with the clearance requirements for mechanical installation shall not interfere with the clearance requirements for mechanical and electrical system maintenance.

3.1.1 Device Mounting Criteria

Devices mounted in or on piping or ductwork, on building surfaces, in mechanical/electrical spaces, or in occupied space ceilings shall be

installed in accordance with manufacturer's recommendations and as shown. Control devices to be installed in piping and ductwork shall be provided with all required gaskets, flanges, thermal compounds, insulation, piping, fittings, and manual valves for shutoff, equalization, purging, and calibration. Strap-on temperature sensing elements shall not be used except as specified.

3.1.2 Wiring Criteria

Wiring external to control panels, including low-voltage wiring, shall be installed in metallic raceways. Nonmetallic-sheathed cables or metallic-armored cables may be installed in areas permitted by NFPA 70. Wiring shall be installed without splices between control devices and HVAC control panels. Cables and conductors shall be tagged at both ends, with the identifier shown on the shop drawings, in accordance with the requirements of Section 16415 ELECTRICAL WORK, INTERIOR. Other electrical work shall be as specified in Section 16415 ELECTRICAL WORK, INTERIOR and as shown.

3.1.2.1 Power-Line Surge Protection

Equipment connected to ac circuits shall be protected from powerline surges. Equipment protection shall meet the requirements of IEEE C62.41. Fuses shall not be used for surge protection.

3.1.2.2 Surge Protection for Transmitter and Control Wiring

HVAC system control panel equipment shall be protected against surges induced on control and transmitter wiring installed outside and as shown. The equipment protection shall be tested in the normal mode and in the common mode, using the following two waveforms:

a. A 10-microsecond by 1000-microsecond waveform with a peak voltage of 1500 volts and a peak current of 60 amperes.

b. An 8-microsecond by 20-microsecond waveform with a peak voltage of 1000 volts and a peak current of 500 amperes.

3.1.2.3 Controller Output Loop Impedance Limitation

Controller output loops shall be constructed so that total circuit impedance connected to the analog output of a single-loop controller shall not exceed 600 ohms.

3.2 CONTROL SYSTEM INSTALLATION

3.2.1 Damper Actuators

Actuators shall not be mounted in the air stream. Multiple actuators operating a common damper shall be connected to a common drive shaft. Actuators shall be installed so that their action shall seal the damper to the extent required to maintain leakage at or below the specified rate and shall move the blades smoothly.

3.2.2 Local Gauges for Actuators

Pneumatic actuators shall have an accessible and visible receiver gauge installed in the tubing lines at the actuator as shown.

3.2.3 Room-Instrument Mounting

Room instruments shall be mounted so that their sensing elements are 1.5 m above the finished floor unless otherwise shown. Temperature setpoint device shall be recess mounted.

3.2.4 Smoke Detectors

Duct smoke detectors shall be provided in supply and return air ducts in accordance with NFPA 90A.

3.2.5 Manual Emergency Fan Shutdown Switches

Manual emergency fan shutdown switches shall be provided for air distribution fans in accordance with NFPA 90A. Switches shall be the manual-reset type. Switches shall be located and mounted in an accessible manner, approximately 1.2 m above the finished floor. Switches shall be properly identified in etched rigid plastic placards.

3.2.6 Low-Temperature-Protection Thermostats

For each 1.8 square meters of coil-face area, or fraction thereof, a thermostat shall be provided to sense the temperature at the location shown. The thermostat sensing element shall be installed in a serpentine pattern.

3.2.7 Averaging-Temperature Sensing Elements

Sensing elements shall have a total-element minimum length equal to 3.3 linear meter per square meter of duct cross-sectional area.

3.2.8 Foundations and Housekeeping Pads

Foundations and housekeeping pads shall be provided for the HVAC control system air compressors.

3.2.9 Compressed-Air Stations

The air-compressor assembly shall be mounted on vibration eliminators, in accordance with ASME BPV VIII Div 1 for tank clearance. The air line shall be connected to the tank with a flexible pipe connector. Compressed-air-station specialties shall be installed with all required tubing, including condensate tubing to a floor drain.

3.2.10 Duct Static-Pressure Sensing Elements and Transmitters

The duct static-pressure sensing element and transmitter sensing point shall be located at 75% to 100% of the distance between the first and last air terminal units.

3.2.11 Indication Devices Installed in Piping and Liquid Systems

Gauges in piping systems subject to pulsation shall have snubbers. Gauges for steam service shall have pigtail fittings with cock. Thermometers and temperature sensing elements installed in liquid systems shall be installed in thermowells.

3.2.12 Control System Tubing

The control system shall be installed so that pneumatic lines are not exposed to outside-air temperatures. Air lines shall be concealed except in mechanical rooms and other areas where other tubing and piping is exposed. All tubes and tube bundles exposed to view shall be installed neatly in lines parallel to the lines of the building. Tubing between panels and actuators in mechanical/electrical spaces shall be routed so that the lines are easily traceable. Air lines shall be tested periodically for leaks during installation. Air lines shall be purged of dirt, impurities and moisture before connecting to the control equipment. Air lines shall be number coded or color coded and keyed to the submittal drawings for future identification and servicing the control system.

3.2.12.1 Pneumatic Lines In Mechanical/Electrical Spaces

In mechanical/electrical spaces, pneumatic lines shall be plastic tubing or copper tubing. Horizontal and vertical runs of plastic tubes or soft copper tubes shall be installed in raceways dedicated to tubing. The dedicated raceways shall be supported every 1.8 m for horizontal runs and every 2.4 m for vertical runs. Tubing not installed in raceways shall be hard-drawn copper tubing with sweat fittings and valves, supported every 1.8 m for horizontal runs and every 2.4 m for vertical runs.

3.2.12.2 Pneumatic Lines External To Mechanical/Electrical Spaces

Tubing external to mechanical/electrical spaces, when run in plenum ceilings, shall be soft copper with sweat fittings, supported every 2.4 m. Tubing not in plenum spaces shall be soft copper with sweat fittings supported every 2.4 m or shall be plastic tubing in raceways dedicated to tubing.

3.2.12.3 Connection to Liquid Lines

Tubing for connection of sensing elements and transmitters to liquid lines shall be copper with brass compression fittings.

3.2.12.4 Connection to Ductwork

Tubing for connection of sensing elements and transmitters to ductwork shall be plastic tubing.

3.2.12.5 Tubing in Concrete

Tubing in concrete shall be installed in rigid conduit. Tubing in walls containing insulation, fill, or other packing materials shall be installed in raceways dedicated to tubing.

3.2.12.6 Final Connection to Actuators

Final connections to actuators shall be plastic tubing 300 mm long and unsupported at the actuator.

3.2.12.7 Connection to HVAC Control Panel

A manual valve shall be provided at each HVAC control panel to allow shutoff of main air. Pneumatic connections to HVAC control panels shall be made at bulkhead fittings. Final connections to HVAC control panel bulkhead fitting shall be exposed tubing approximately 300 mm long.

3.2.13 Sail Switch

Provide sail switches which shall mount to and extend into the ductwork for direct measurement of air velocity at the locations indicated. Provide dust proof switch with means for positive switching. Operating air velocity shall be above 3.05 m/s.

3.3 CONTROL SEQUENCES OF OPERATION

3.3.1 System Requirements

These requirements shall apply to all primary HVAC systems unless modified herein. The sequences describe the actions of the control system for one direction of change in the HVAC process analog variable, such as temperature, humidity or pressure. The reverse sequence shall occur when the direction of change is reversed.

3.3.1.1 HVAC System Supply Fan Operating

HVAC system outside-air, return-air, and relief-air dampers shall function as described hereinafter for specific modes of operation unless control of the dampers is assumed by the fire and smoke control system. Smoke dampers shall open before fans are allowed to start. Cooling-coil control valves shall function as described hereinafter for the specific modes of operatio n. Heating coil valves shall be under control.

3.3.1.2 HVAC System Supply Fan Not Operating

When an HVAC system is stopped, interlocked fans shall stop, the smoke dampers shall close, the outside-air and relief-air dampers shall close, the return-air damper shall open, all stages of direct-expansion cooling shall stop, the system shall pump down if it has a pump down cycle, and cooling-coil valves for coils located indoors shall close to the coil. Cooling-coil valves of units located outdoors shall open to the coil. Heating-coil valves shall remain under control.

3.3.2 Convector Control Sequence

A none electric zone thermostat with remote sensor, located as shown, shall operate a control valve to maintain the setpoint as shown.

3.3.3 Unit-Heater and Cabinet-Unit-Heater

A wall-mounted thermostat with an "AUTO-OFF" switch located as shown, shall cycle the fan to maintain its setpoint as shown when the switch is in the "AUTO" position. When the switch is in the "OFF" position, the fan shall be stopped.

3.3.4 All-Air Small Package Split System

A microprocessor-based room thermostat, located as shown, with "HEAT-OFF-COOL" or "OFF-COOL" as appropriate and "AUTO-ON" switches shall control the system. When the switch is in the "HEATING" position, the cooling unit shall be off, and heating shall be active. The thermostat shall modulate the heating valve and system fan to maintain the day and night setpoints as shown. When the switch is in the "COOLING" position, the heating unit shall be off. The thermostat shall operate the condensing unit and system fan to maintain the setpoint as shown. When the switch is in the "OFF" position, the system shall be off. When the "AUTO-ON" switch is in the "ON" position, the system fan shall run continuously. In the

"AUTO" position, the system fan shall operate whenever heating or cooling is required.

3.3.5 Single Building Hydronic Heating with Hot Water Boiler

a. All Modes - The outside-air temperature controller shall accept a signal at its process variable input from a sunshielded outside-air temperature sensing element and transmitter located as shown. The outside-air temperature controller process variable relay contact output shall start and stop the distribution pump P-1A & P-1B, boiler pump P-2, and boiler B-1 at the outside-air temperatures shown. The analog output of the outside-air temperature controller shall send a signal to the remote setpoint input of the primary hydronic-heating system temperature controller to reset the hydronic-heating supply temperature setpoint in a linear schedule based on the outside-air temperature as shown. The hydronic-heating supply temperature controller shall accept a signal at its process variable input from a temperature sensing element and transmitter located in the hydronic-heating supply line and the controller output shall modulate the hydronic-heating system control valve to maintain the reset schedule setpoint in the hydronic-heating supply line.

3.3.6 Variable-Air-Volume Control Sequence with Return Fan

3.3.6.1 Occupied, Unoccupied, and Ventilation-Delay Modes

Ventilation-delay-mode timing shall start prior to the occupied-mode timing. The timeclock shall close a contact, which shall turn on the ventilation-delay pilot light and energize a relay which shall prevent the outside-air damper from opening. At the time shown, the timeclock shall close a contact which shall turn on the occupied-mode pilot light and shall place the system in the occupied mode. At the expiration of the ventilation-delay-mode timing period, the timeclock shall open the contact to turn off the ventilation-delay-mode pilot light and de-energize a relay to allow the outside-air damper to open. At the time shown, the timeclock shall open the contact to turn off the occupied-mode pilot light and shall place the control system in the unoccupied mode of operation.

3.3.6.2 Outside-Air, Return-Air, and Relief-Air Dampers

a. Occupied Mode - The outside-air, return-air, and relief-air dampers shall be under mixed-air temperature and economizer control.

b. Unoccupied and Ventilation-Delay Modes - The dampers shall return to their normal positions.

3.3.6.3 Supply-Fan and Return-Fan Control

a. Occupied and Ventilation-Delay Modes - Supply fan and return fan shall start and operate continuously.

b. Unoccupied Mode - The supply fan and the return fan shall cycle from a night-thermostat. The fans shall start at and stop at the setpoint as shown.

3.3.6.4 Supply-Duct Pressurization Control

When the supply fan starts, the duct static-pressure controller shall modulate the variable frequency drive unit (VFUD) from the signal of a pressure-sensing element and transmitter to maintain the setpoint as shown. A high-limit static-pressure switch in the fan discharge shall stop the supply fan and the return fan and turn on the high-static pilot light when the static pressure exceeds the setpoint. Restarting the supply fan and the return fan and turning off the pilot light shall require manual reset at the HVAC control panel.

3.3.6.5 Return-Fan Volume Control

When the return fan starts, the return-fan volume controller shall modulate the return-fan variable frequency drive unit (VFUD)from the signals of an airflow measurement station and transmitter located in the return-fan inlet ductwork, in combination with an airflow measurement station and transmitter in the supply-fan outlet ductwork, to maintain a constant difference between supply-air and return-air flow rates as shown.

3.3.6.6 Filter

A differential-pressure switch across the filters shall turn on the filter pilot light when the pressure drop across the filters reaches the setpoint as shown.

3.3.6.7 Freeze Protection

All Modes - A freezestat, located as shown, shall stop the supply and return fans, cause the outside air, return air, and relief air dampers to return to their normal position as shown, and shall turn on the low-temperature pilot light in the HVAC control panel if the temperature drops below the freezestat's setpoint as shown. Return to the normal mode of operation shall require manual reset at the HVAC control panel.

3.3.6.8 Cooling Coil

a. Occupied and Ventilation-Delay Modes - The control valve shall be modulated by the cooling-coil temperature controller from the signal of a temperature-sensing element and transmitter located in the coil discharge air to maintain the setpoint as shown.

b. Unoccupied Mode - The cooling-coil temperature-controller output signal shall be interrupted and the cooling-coil control valve shall be closed.

3.3.6.9 Economizer Control

An economizer controller shall accept the signal of an outside-air temperature-sensing element and transmitter at its remote setpoint input and shall accept the signal of a return-air temperature-sensing element and transmitter at its process variable input. The economizer controller shall perform switch-over between outside-air economizer control mode and minimum outside-air mode. Until the return-air temperature rises above the setpoint as shown, the economizer controller shall hold the system in the minimum-outside-air mode and the economizer pilot light shall be off. When the return-air temperature rises above the setpoint, the economizer controller shall place the control system in the economizer mode or in the minimum-outside-air mode as determined by a comparison of the outside-air and return-air temperatures in accordance with the differential temperature setpoints as shown. When the outside-air temperature is low with respect

to the return-air temperature, the control system shall be in the economizer mode and the economizer pilot light shall be on. When the economizer controller places the control system in the minimum outside-air mode, the outside-air damper shall be open to the setting determined by the minimum-position switch.

3.3.6.10 Mixed-Air Temperature Control

When the economizer controller places the system in the economizer mode, the mixed-air temperature controller shall modulate the dampers from the signal of a temperature sensing element and transmitter located in the mixed-air stream to maintain the setpoint as shown.

3.3.6.11 Pressure-Independent Terminal VAV Box

All Modes - The control damper of the VAV box shall modulate in response to the signal from a flow-sensing element at the discharge or inlet of the VAV box to a microprocessor-based VAV-box velocity controller. The velocity controller shall control the box damper from the minimum-flow position to the full-flow position from the signal of a space-temperature sensing element located as shown. When the space temperature decreases, the damper shall gradually close to the minimum-flow position to maintain the cooling setpoint as shown. When the space temperature calls for heating after the minimum-flow position is reached, control shall then pass through a temperature dead band as shown. When the space temperature has dropped through the dead band, the duct heater coil shall be gradually controlled to maintain the heating setpoint as shown.

3.3.6.12 Emergency Fan Shutdown

Activation of a duct smoke detector in the supply-air or return-air ductwork, or activation of a manual emergency fan shutdown switch shall cause the associated fan to shutdown in accordance with NFPA 90A. Activation of these devices shall operate a pilot light on the HVAC control panel. The panel shall require manual resetting after the detector and the manual switch are reset.

3.3.6.13 Preheat Coil

a. Occupied (AHU - ON) The air discharge temperature controller shall modulate the 3-way valve to maintain its setpoint.

b. Unoccupied (AHU - OFF) The N.O. valve shall go to its full open position with full flow through the coil.

3.3.7 Exhaust Fan

Exhaust fans and interlocked device, where applicable, shall operate as shown.

3.3.8 Computer room Air-Conditioning (CRAC) Units

The CRAC units shall operate as indicated in Section 15653 AIR CONDITIONING SYSTEM (UNITARY TYPE).

3.3.9 Air-Cooled Chiller (ACC-1) Unit

The ACC unit shall operate as indicated in Section 15650 CENTRAL REFRIGERATED AIR-CONDITIONING SYSTEM.

3.4 COMMISSIONING PROCEDURES

3.4.1 General Procedures

3.4.1.1 Evaluations

The Contractor shall make the observations, adjustments, calibrations, measurements, and tests of the control systems, tune the controllers, set the timeclock schedule, and make any necessary control-system corrections to ensure that the systems function as described in paragraph CONTROL SEQUENCES OF OPERATION. The Contractor shall permanently record, on system equipment schedule, the final setting of controller proportional, integral and derivative constant settings, setpoint, manual reset setting, maximum and minimum controller output, and ratio and bias settings, in units and terminology specific to the controller.

3.4.1.2 Item Check

An item-by-item check of the sequence of operation requirement shall be performed using Steps 1 through 4 in the specified control system commissioning procedures. Steps 1, 2, and 3 shall be performed with the HVAC system shutdown; Step 4 shall be performed after the HVAC systems have been started. Signals used to change the mode of operation shall originate from the actual HVAC control device intended for the purpose, such as the time clock. External input signals to the HVAC control panel (such as EMCS, starter auxiliary contacts, and external systems) may be simulated in Steps 1, 2, and 3. With each operational-mode change signal, pilot lights and HVAC-panel output-relay contacts shall be observed to ensure that they function. All terminals assigned to EMCS shall be checked and observed to ensure that the proper signals are available.

3.4.1.3 Weather-Dependent Test Procedures

Weather-dependent test procedures that cannot be performed by simulation shall be performed in the appropriate climatic season. When simulation is used, the Contractor shall verify the actual results in the appropriate season.

3.4.1.4 Configuration

The Contractor shall configure each controller for its specified service.

3.4.1.5 Two-Point Accuracy Check

A two-point accuracy check of the calibration of each HVAC-control-system sensing element and transmitter shall be performed by comparing the HVAC-control-panel readout to the actual value of the variable measured at the sensing element and transmitter or airflow measurement station location. Digital indicating test instruments shall be used, such as digital thermometers, motor-driven psychrometers, and tachometers. The test instruments shall be at least twice as accurate as the specified sensing element-to-controller readout accuracy. The calibration of the test instruments shall be traceable to NIST standards. The first check point shall be with the HVAC system in the shutdown condition, and the second check point shall be with the HVAC system in an operational condition. Calibration checks shall verify that the sensing element-to-controller readout accuracies at two points are within the specified product accuracy tolerances. If not, the device shall be

recalibrated or replaced and the calibration check repeated.

3.4.1.6 Insertion, Immersion Temperature

Insertion-temperature and immersion-temperature sensing element and transmitter-to-controller readout calibration accuracy shall be checked at one physical location along the axis of the sensing element.

3.4.1.7 Averaging Temperature

Averaging-temperature sensing element and transmitter-to-controller readout calibration accuracy shall be checked every 1/2 meter along the axis of the sensing element in the proximity of the sensing element, for a maximum of 10 readings. These readings shall then be averaged.

3.4.1.8 Controller Stations

The Contractor shall use the controllers' MANUAL/AUTOMATIC stations as the means of manipulating control devices, such as dampers and valves, to check IP operation and to effect stable conditions prior to making measurement checks.

3.4.1.9 Controller-Tuning Procedure

The Contractor shall perform a controller-tuning procedure, which shall consist of setting the initial proportional, integral, and derivative (PID) mode constants, controller setpoints, and logging the settings. Tuning shall be self-tuning operation by the controller unless manual tuning is necessary.

3.4.1.10 Controller Manual-Tuning Procedure

Where required, the controller manual-tuning procedure shall be performed in three steps. Using a constant-temperature-setpoint controller as an example, these steps are:

a. Step A:

(1) The controller MANUAL/AUTO station shall be indexed to the AUTO position and the integral- and derivative-mode constants set to zero.

(2) The proportional-mode constant shall be set to an initial setting of 8 percent. (This corresponds to 18.6 kPa per degree C or 3.6 ma per degree C proportional controller output change for a 55.5 degree C transmitter span.) This causes the controller output signal to vary from live zero output to full output for an input signal change representing an 4.5 degree C change.

(3) Controllers for other variables, such as relative humidity and static pressure, shall have their proportional-mode constants set initially in a similar manner for an achievable output range proportional to the transmitter span.

b. Step B:

(1) The controller temperature setpoint shall be set at any achievable temperature. The controller output and transmitter input shall be observed.

(2) If the transmitter input continuously oscillates above and below the setpoint without settling at a fixed value, or if such oscillation increases, the proportional-mode constant is too small.

(3) If the proportional-mode constant is too small, increase it in steps until the transmitter input indicates stable control at any temperature, provided that the controller output is not at either extreme of the output range.

(4) If the temperature control point slowly drifts toward or away from the controller setpoint, the proportional-mode constant is too large. Its setting shall be decreased in steps until oscillations occur as described in the preceding paragraphs, and then the setting shall be increased until stable control occurs.

(5) A step change in controller setpoint shall be introduced. This should cause the controller to overshoot the setpoint slightly, with each subsequent overshoot peak value decreasing by a factor of 2/3 until stable control is achieved at, above, or below the setpoint.

(6) Next, the integral-mode constant setting shall be increased in small steps, and setpoint changes shall be introduced until control point and controller setpoint coincide at stable control. This should happen consistently after a setpoint change within a short time, such as 5 to 10 minutes.

c. Step C:

(1) Unless the HVAC process variable changes rapidly, the derivative-mode constant setting can remain at zero.

(2) If derivative control is needed, the derivative-mode constant shall be gradually increased.

(3) Step changes in controller setpoint shall be introduced, and the derivative-mode constant setting adjusted until stable control is achieved.

3.4.1.11 Setting the Controller

After the controller manual-tuning procedure is complete, the controller shall be set at the setpoint as shown.

3.4.2 Space-Temperature-Controlled Convector

The heating medium shall be turned on, and the thermostat temperature setpoint shall be raised. The valve shall open. The thermostat temperature shall be lowered and the valve shall close. The thermostat shall be set at the setpoint shown.

3.4.3 Unit Heater and Cabinet Unit Heater

The "OFF/AUTO" switch shall be placed in the "OFF" position. Each space-thermostat temperature setting shall be turned up so that it makes contact to turn on the unit-heater fans. The unit-heater fans shall not start. The "OFF/AUTO" switch shall be placed in the "AUTO" position. The unit-heater fans shall start. Each space-thermostat temperature setting

shall be turned down, and the unit-heater fans shall stop. The thermostats shall be set at their temperature setpoints as shown. The results of testing of one of each type of unit shall be logged.

3.4.4 All-Air Small Packaged Split

The fan "AUTO/ON" switch shall be set to "ON". The heating-cooling switch where applicable shall be raised to "HEATING" and cooling shall be off. The temperature setpoint shall be raised and heating shall start. The heating/cooling or cooling switch shall be set to "COOLING" and heat shall be off. The temperature setpoint shall be lowered and cooling shall start. The fan "AUTO/ON" switch shall be set to "AUTO" and the foregoing procedure repeated. The fan shall start and stop automatically with the starting and stopping of heating and cooling. When the system is verified as operational, the correct temperature settings shall be restored. The results of testing of one of each type of unit shall be logged.

3.4.5 Single Building Hydronic-Heating with Hot Water Boiler

Steps for installation shall be as follows:

a. Step 1 - System Inspection: The HVAC system shall be observed in its shutdown condition. It shall be verified that power and main air are available at the HVAC system control panel.

b. Step 2 - Calibration Accuracy Check with HVAC System Shutdown: Readings shall be taken with a digital thermometer at each temperature-sensing element location. Each controller display shall be read, and the thermometer and controller-display readings logged. The calibration accuracy of the sensing element-to-controller readout for outside-air temperature and system-supply temperature shall be checked.

c. Step 3 - Actuator Range Adjustments: A signal shall be applied to the actuator using the controller "MANUAL/AUTO" station in "MANUAL." The proper operation of the actuators and positioners for all valves shall be verified visually. The signal shall be varied from live zero of 4 ma or 21 kPa to 20 ma or 103 kPa , and it shall be verified that the actuators travel from zero stroke to full stroke within the signal range. It shall be verified that all sequenced actuators move from zero stroke to full stroke in the proper direction, and move the connected device in the proper direction from one extreme position to the other. Example: NC actuators are closed at 4 ma or 21 kPa and are open at 20 ma or 103 kPa . The signal levels that move the controlled device to its extreme positions shall be logged.

d. Step 4 - Control-System Commissioning:

(1) The outside-air temperature controller "MANUAL/AUTO" station shall be indexed to the "MANUAL" position and the two-point calibration sensing element-to-controller readout accuracy check for the outside-air temperature performed. The controller proportional band adjustment, the setpoint, the manual reset, and the maximum controller output shall be set to achieve the outside-air temperature schedule as shown.

(2) A signal shall be applied to simulate that the outside-air temperature is above the setpoint as shown. It shall be verified

that pumps P-1A, P-1B, P-2 and boiler B-1 stop. A signal shall be applied to simulate that the outside-air temperature is below the setpoint as shown. It shall be verified that pumps P-1A, P-1B, P-2 start and boiler B-1 operates.

(3) The system's supply-temperature controller "MANUAL/AUTO" station shall be indexed to the "MANUAL" position, and the two-point calibration accuracy check of the sensing element-to-controller readout for the system-supply temperature performed. The controller shall be placed in the remote-setpoint mode. The remote setpoint for temperature schedule shall be set as shown. The controller "MANUAL/AUTO" station shall be indexed to the "AUTO" position, and the controller setup and tuning procedures performed. The controller shall be set at a system-supply temperature setpoint within the schedule as shown and the mode-constant setpoints logged. Signals of 8 ma and 16 ma shall be sent to the remote setpoint from the outside-air temperature controller, to verify that the controller setpoint changes to the appropriate values. The outside-air temperature controller's "MANUAL/AUTO" station shall be indexed to "AUTO."

(4) An occupied-mode signal shall be applied. Each space-temperature controller "MANUAL/AUTO" station shall be indexed to "MANUAL." The calibration accuracy check of sensing element-to-controller readout for each space temperature shall be performed, and the values logged. The controller shall be placed in the remote-setpoint mode. The setpoint low-end limit shall be set to 19 degrees C and the high-end limit shall be set to 22 degrees C. The proper action of the temperature-setpoint device at the space-temperature sensing element and transmitter location shall be verified. Each controller "MANUAL/AUTO" station shall be indexed to the "AUTO" position and the controller-tuning procedure performed. An unoccupied-mode signal shall be applied and it shall be verified that each controller's setpoint changes to the unoccupied-mode setting. The temperature setpoint device shall be set to the space-temperature setpoint as shown.

3.4.6 Variable-Air-Volume Control

System with Return Fan Steps for installation shall be as follows:

a. Step 1 - System Inspection: The HVAC system shall be observed in its shutdown condition. Power and main air shall be available at the HVAC system control panel. The outside-air and relief-air dampers shall be closed, the return-air damper open, the preheat coil valve shall be open, and cooling-coil valve shall be closed.

b. Step 2 - Calibration Accuracy Check with HVAC System Shutdown: Readings shall be taken with a digital thermometer at each temperature sensing element location. Each controller display shall be read, and the thermometer and controller-display readings logged. The calibration accuracy of the sensing element-to-controller readout for outside-air, return-air, mixed-air, heating coil discharge air temperature and cooling-coil discharge-air temperatures shall be checked. The supply-airflow and return-airflow shall be read, using a digital indicating velometer, and the velometer and controller-display readings logged. The flows shall read zero.

c. Step 3 - Actuator Range Adjustments: A signal shall be applied to the actuator, using the controller "MANUAL/AUTO" station in "MANUAL." The proper operation of the actuators and positioners for all dampers and valves shall be verified. The signal shall be varied from live zero of 4 ma or 21 kPa to 20 ma or 103 kPa , and it shall be verified that the actuators travel from zero stroke to full stroke within the signal range. It shall be verified that all sequenced and parallel-operated actuators move from zero stroke to full stroke in the proper direction, and move the connected device in the proper direction from one extreme position to the other.

d. Step 4 - Control-System Commissioning:

(1) With the fans ready to start, the ventilation-delay-mode signal shall be applied, and it shall be verified that the ventilation-delay mode pilot light turns on. The occupied-mode signal shall be applied, and it shall be verified that the occupied-mode pilot light turns on and that supply fan and return fan start. It shall be verified that the outside-air and relief-air dampers are closed, the return-air damper is open, the preheat coil and face bypass dampers and the cooling-coil valve and VFDU are under control, by slightly changing the controller output. The ventilation-delay-mode signal shall be released, and it shall be verified that the ventilation-delay-mode pilot light turns off and that the outside-air, return-air and relief-air dampers come under control by changing the controller output.

(2) The minimum-outside-air-mode signal shall be applied. It shall be verified that the outside-air damper opens to minimum position and that the economizer pilot light is off.

(3) With supply fan running, a high-static-pressure input signal shall be simulated at the device, by pressure input to the differential-pressure switch sensing device. HVAC system shutdown shall be observed. It shall be verified that the high-static pilot light turns on, and that contact output at the EMCS terminals is made. The differential-pressure switch shall be set at the setpoint as shown. The HVAC system shall be restarted by manual restart, and it shall be verified that the high-static-pressure pilot light turns off.

(4) The supply-fan static-pressure controller "MANUAL/AUTO" station shall be indexed to the "MANUAL" position, and the two-point calibration accuracy check for sensing element-to-controller readout shall be performed. The controller shall be placed in the local setpoint mode. The controller "MANUAL/AUTO" station shall be indexed to the "AUTO" position, and the controller-tuning procedure performed. The controller shall be set at the static-pressure setpoint, and the mode-constants logged.

(5) Each VAV terminal unit controller's minimum-flow and maximum-flow setpoints shall be set at the same setting. This will prevent the VAV-box damper from modulating under space-temperature control and will achieve a constant supply-duct-system pressure drop. The return-fan VFDUshall be placed under control, and the starter switch shall be turned to the "AUTO" position so that the fan starts. The "MANUAL/AUTO"

station of the return-fan air-volume controller shall be indexed to the "MANUAL" position, and the two-point calibration accuracy check of sensing element-to-controller readout shall be performed. The controller shall be placed in the remote-setpoint mode. Using the supply-duct static-pressure controller's "MANUAL" function, operate the supply-fan VFDUto change the supply-fan flow, and the controller ratio and bias settings shall be set to control at indicated L/s at 4-ma input and indicated L/s at 20-ma input. The supply-fan flow shall be changed to verify that the return-flow setpoint tracks the supply-fan flow with the proper flow difference. A 12-ma signal shall be sent for tuning at setpoint midrange. The controller "MANUAL/AUTO" station shall be indexed to the "AUTO" position and the controller tuning procedure shall be performed. A 4-ma, 12-ma and 20-ma signals shall be sent to the remote setpoint input, and it shall be verified that the return fan goes from minimum-delivery setpoint to midrange delivery setpoint, and then to maximum-delivery setpoint. The supply-duct static-pressure controller shall be placed in "AUTO."

(6) The mixed-air temperature controller "MANUAL/AUTO" station shall be indexed to the "MANUAL" position. An economizer-mode input signal shall be simulated and it shall be verified that the economizer-mode pilot light turns on. The mixed-air temperature controller output shall be changed to slightly open the outside-air damper and the second point of the two-point calibration accuracy check of sensing element-to-controller readout for outside-air, return-air, and mixed-air temperatures shall be performed. The controller-tuning procedure shall be performed. The mixed-air temperature controller "MANUAL/AUTO" switch shall be indexed to the "AUTO" position. The mixed-air temperature controller shall be placed in the local setpoint mode and set at the temperature setpoint as shown.

(7) The cooling coil temperature controller "MANUAL/AUTO" station shall be indexed to the "MANUAL" position, and the calibration accuracy check of sensing element-to-controller readout shall be performed. The controller shall be placed in the local-setpoint mode, and set at the temperature setpoint as shown. The controller "MANUAL/AUTO" station shall be indexed to the "AUTO" position, and the controller-tuning procedure performed. This procedure will apply to preheat coil also.

(8) An unoccupied-mode signal shall be applied, and it shall be verified that the occupied-mode pilot light turns off, the HVAC system shuts down, and the control system assumes the specified shutdown conditions. The night-thermostat temperature setting shall be turned upward, and it shall be verified that the HVAC system starts; the setting shall be turned downward, and it shall be verified that the HVAC system stops. The night thermostat shall be set at the setpoint as shown.

(9) With the HVAC system running, a filter differential-pressure switch input signal shall be simulated at each device. It shall be verified that each filter pilot light turns on, and that contact output at the EMCS terminals is made. The differential-pressure switch shall be set at the setpoint as shown.

(10) With the HVAC system running, a freezestat trip input signal

shall be simulated at the device. HVAC system shall shut down, and contact output at EMCS terminals shall be verified. It shall be verified that the low-temperature pilot light turns on. The freezestat shall be set at the setpoint as shown. The HVAC system shall be restarted by manual restart, and it shall be verified that the pilot light turns off.

(11) With the HVAC system running, a smoke-detector trip input signal shall be simulated at each detector and control-device actions and interlock functions, as described in paragraph CONTROL SEQUENCES OF OPERATION shall be verified. Simulation shall be performed without false-alarming any Life Safety systems. It shall be verified that the HVAC system shuts down, that the smoke-detector pilot light turns on, and that contact output at the EMCS terminals is made. The detectors shall be reset. The HVAC system shall be restarted by manual restart, and it shall be verified that the pilot light turns off.

(12) For each VAV terminal unit, velocity setpoints shall be set for minimum and maximum flow, and temperature setpoints shall be set for the heating/cooling dead band. The actions of the controller, the operation of the damper, and the operation of heating shall be verified. It shall be verified that space temperature is maintained.

(13) With the HVAC system running and the preheat coil temperature controller set below its setpoint, the preheat coil valve operation shall be verified.

(14) With the HVAC system off, it shall be verified that the preheat coil control shall go to the preheat coil section thermostat and shall control the 3-way valve to full flow or full bypass according to thermostat setting.

3.4.7 Exhaust Fans

It shall be verified that the exhaust fans and interlocked devices operate as shown. Thermostats shall be set at the setpoints shown. The results of one of each type of unit shall be logged.

3.4.8 Computer Room Air Conditioning (CRAC) Units

It shall be verified that the CRAC units operate as indicated in Section 15653 AIR-CONDITIONING SYSTEM (UNITARY TYPE). The results for all units shall be logged.

3.4.9 Air-Cooled Chiller (ACC)

It shall be verified that the ACC unit operate as indicated in Section 15650 CENTRAL REFRIGERATION AIR-CONDITIONING SYSTEM. The results for the unit shall be logged.

3.5 BALANCING, COMMISSIONING, AND TESTING

3.5.1 Coordination with HVAC System Balancing

Commissioning of the control system, except for tuning of controllers, shall be performed prior to or simultaneous with HVAC system balancing. The Contractor shall tune the HVAC control system after all air-system and

hydronic-system balancing has been completed, minimum damper positions set and a report has been issued.

3.5.2 Control System Calibration, Adjustments, and Commissioning

Control system commissioning shall be performed for each HVAC system, using test plans and procedures previously approved by the Government. The Contractor shall provide all personnel, equipment, instrumentation, and supplies necessary to perform commissioning and testing of the HVAC control system. All instrumentation and controls shall be calibrated and the specified accuracy shall be verified using test equipment with calibration traceable to NIST standards. Wiring shall be tested for continuity and for ground, open, and short circuits. Tubing systems shall be tested for leaks. Mechanical control devices shall be adjusted to operate as specified. HVAC control panels shall be pretested off-site as a functioning assembly ready for field connections, calibration, adjustment, and commissioning of the operational HVAC control system. Written notification of any planned commissioning or testing of the HVAC Control systems shall be given to the Government at least 14 calendar days in advance.

3.5.3 Performance Verification Test

The Contractor shall demonstrate compliance of the HVAC control system with the contract documents. Using test plans and procedures previously approved by the Government, the Contractor shall demonstrate all physical and functional requirements of the project. The performance verification test shall show, step-by-step, the actions and results demonstrating that the control systems perform in accordance with the sequences of operation. The performance verification test shall not be started until after receipt by the Contractor of written permission by the Government, based on Government approval of the commissioning report and completion of balancing. The tests shall not be conducted during scheduled seasonal off-periods of base heating and cooling systems.

3.5.4 Posted and Panel Instructions

Posted and panel instructions, showing the final installed conditions, shall be provided for each system. The posted instructions shall consist of half-size laminated drawings and shall include the control system schematic, equipment schedule, ladder diagram, sequence of operation, panel arrangement drawings, wiring diagram, and valve and damper schedules. The posted instructions shall be permanently affixed, by mechanical means, to a wall near the control panel. Panel instructions shall consist of laminated letter-size sheets and shall include a routine maintenance checklist and controller configuration check sheets with final configuration record for each controller. Panel instructions and one copy of the operation and maintenance manuals, previously described herein, shall be placed inside each control panel.

3.6 TRAINING

3.6.1 Training-Course Requirements

A training course shall be conducted for 2 operating staff members designated by the Contracting Officer. The training period, for a total of 32 hours of normal working time, shall be conducted within 30 days after successful completion of the performance verification test. The training course shall be conducted at the project site. Audiovisual equipment and 4

sets of all other training materials and supplies shall be provided. A training day is defined as 8 hours of classroom instruction, including two 15-minute breaks and excluding lunchtime, Monday through Friday, during the daytime shift in effect at the training facility.

3.6.2 Training-Course Content

For guidance in planning the required instruction, the Contractor shall assume that attendees will have a high school education or equivalent, and are familiar with HVAC systems. The training course shall cover all of the material contained in the operating and maintenance instructions, the layout and location of each HVAC control panel, the layout of one of each type of unitary equipment and the locations of each, the location of each system-control device external to the panels, the location of the compressed-air station, preventive maintenance, troubleshooting, diagnostics, calibration, adjustment, commissioning, tuning, and repair procedures. Typical systems and similar systems may be treated as a group, with instruction on the physical layout of one such system. The results of the performance verification test and the calibration, adjustment and commissioning report shall be presented as benchmarks of HVAC control-system performance by which to measure operation and maintenance effectiveness.

-- End of Section --

SECTION 15990

TESTING, ADJUSTING, AND BALANCING OF HVAC SYSTEMS

PART 1 GENERAL

1.1 REFERENCES

The publications listed below form a part of this specification to the extent referenced. The publications are referred to in the text by basic designation only.

ASSOCIATED AIR BALANCE COUNCIL (AABC)

AABC MN-1	(1989) National Standards for Testing and Balancing Heating, Ventilating, and Air Conditioning Systems

NATIONAL ENVIRONMENTAL BALANCING BUREAU (NEBB)

NEBB-01	(1991) Procedural Standards for Testing Adjusting Balancing of Environmental Systems

1.2 SUBMITTALS

Government approval is required for submittals with a "GA" designation; submittals having a "FIO" designation are for information only. The following shall be submitted in accordance with Section 01330 SUBMITTAL PROCEDURES:

SD-01 Data

TAB Related HVAC Submittals; FIO;AR.

A list of the TAB Related HVAC Submittals, no later than 7 days after the approval of the TAB Specialist.

SD-04 Drawings

TAB Schematic Drawings and Report Forms; GA|ED.

Three copies of the TAB Schematic Drawings and Report Forms, no later than 21 days prior to the start of TAB field measurements.

SD-06 Instructions

TAB Procedures; GA|ED.

Proposed procedures for TAB, submitted with the TAB Schematic Drawings and Report Forms.

SD-07 Schedules

Systems Readiness Check; FIO;AR.

Proposed date and time to begin the Systems Readiness Check, no later than 7 days prior to the start of the Systems Readiness Check.

TAB Execution; GA|ED.

Proposed date and time to begin field measurements, making adjustments, etc., for the TAB Report, submitted with the Systems Readiness Check Report.

TAB Verification; GA|ED.

Proposed date and time to begin the TAB Verification, submitted with the TAB Report.

SD-08 Statements

TAB Firm; GA|ED.

Certification of the proposed TAB Firm's qualifications by either AABC or NEBB to perform the duties specified herein and in other related Sections, no later than 21 days after the Notice to Proceed. The documentation shall include the date that the Certification was initially granted and the date that the current Certification expires. Any lapses in Certification of the proposed TAB Firm or disciplinary action taken by AABC or NEBB against the proposed TAB Firm shall be described in detail.

TAB Specialist; GA|ED.

Certification of the proposed TAB Specialist's qualifications by either AABC or NEBB to perform the duties specified herein and in other related Sections, no later than 21 days after the Notice to Proceed. The documentation shall include the date that the Certification was initially granted and the date that the current Certification expires. Any lapses in Certification of the proposed TAB Specialist or disciplinary action taken by AABC or NEBB against the proposed TAB Specialist shall be described in detail.

Instrument Calibration; FIO;AR.

List of each instrument to be used during TAB, stating calibration requirements required or recommended by both the TAB Standard and the instrument manufacturer and the actual calibration history of the instrument, submitted with the TAB Procedures. The calibration history shall include dates calibrated, the qualifications of the calibration laboratory, and the calibration procedures used.

SD-09 Reports

Design Review Report; GA|ED.

A copy of the Design Review Report, no later than 14 days after approval of the TAB Firm and the TAB Specialist.

Systems Readiness Check Report; GA|ED.

A copy of completed checklists for each system, each signed by the TAB Specialist, at least 7 days prior to the start of TAB Execution. All items in the Systems Readiness Check Report shall be signed by the TAB Specialist and shall bear the seal of the Professional Society or National Association used as the TAB Standard.

TAB Report; GA|ED.

Three copies of the completed TAB Reports, no later that 7 days after the execution of TAB. All items in the TAB Report shall be signed by the TAB Specialist and shall bear the seal of the Professional Society or National Association used as the TAB Standard.

TAB Verification Report; GA|ED.

Three copies of the completed TAB Verification Report, no later that 7 days after the execution of TAB Verification. All items in the TAB Verification Report shall be signed by the TAB Specialist and shall bear the seal of the Professional Society or National Association used as the TAB Standard.

SD-13 Certificates

Ductwork Leak Testing; FIO;AR.

A written statement signed by the TAB Specialist certifying that the TAB Specialist witnessed the Ductwork Leak Testing, it was successfully completed, and that there are no known deficiencies related to the ductwork installation that will prevent TAB from producing satisfactory results.

1.3 SIMILAR TERMS

In some instances, terminology differs between the Contract and the TAB Standard primarily because the intent of this Section is to use the industry standards specified, along with additional requirements listed herein to produce optimal results. The following table of similar terms is provided for clarification only. Contract requirements take precedent over the corresponding AABC or NEBB requirements where differences exist.

SIMILAR TERMS

Contract Term	AABC Term	NEBB Term
TAB Standard	National Standards for Testing and Balancing Heating, Ventilating, and Air Conditioning Systems	Procedural Standards for Testing Adjusting Balancing of Environmental Systems.
TAB Specialist	TAB Engineer	TAB Supervisor
Systems Readiness Check	Construction Phase Inspection	Field Readiness Check & Preliminary Field Procedures.

1.4 TAB STANDARD

TAB shall be performed in accordance with the requirements of the standard under which the TAB Firm's qualifications are approved, i.e., AABC MN-1or NEBB-01, unless otherwise specified herein. All recommendations and suggested practices contained in the TAB Standard shall be considered mandatory. The provisions of the TAB Standard, including checklists, report forms, etc., shall, as nearly as practical, be used to satisfy the Contract requirements. The TAB Standard shall be used for all aspects of

TAB, including qualifications for the TAB Firm and Specialist and calibration of TAB instruments. Where the instrument manufacturer calibration recommendations are more stringent than those listed in the TAB Standard, the manufacturer's recommendations shall be adhered to. All quality assurance provisions of the TAB Standard such as performance guarantees shall be part of this contract. For systems or system components not covered in the TAB Standard, TAB procedures shall be developed by the TAB Specialist. Where new procedures, requirements, etc., applicable to the Contract requirements have been published or adopted by the body responsible for the TAB Standard used (AABC or NEBB), the requirements and recommendations contained in these procedures and requirements shall be considered mandatory.

1.5 QUALIFICATIONS

1.5.1 TAB Firm

The TAB Firm shall be either a member of AABC or certified by the NEBB and certified in all categories and functions where measurements or performance are specified on the plans and specifications, including TAB of environmental systems building systems commissioning and the measuring of sound and vibration in environmental systems. The certification shall be maintained for the entire duration of duties specified herein. If, for any reason, the firm loses subject certification during this period, the Contractor shall immediately notify the Contracting Officer and submit another TAB Firm for approval. Any firm that has been the subject of disciplinary action by either the AABC or the NEBB within the five years preceding Contract Award shall not be eligible to perform any duties related to the HVAC systems, including TAB. All work specified in this Section and in other related Sections to be performed by the TAB Firm shall be considered invalid if the TAB Firm loses its certification prior to Contract completion and must be performed by an approved successor.

1.5.2 TAB Specialist

The TAB Specialist shall be either a member of AABC or an experienced technician of the Firm certified by the NEBB. The certification shall be maintained for the entire duration of duties specified herein. If, for any reason, the Specialist loses subject certification during this period, the Contractor shall immediately notify the Contracting Officer and submit another TAB Specialist for approval. Any individual that has been the subject of disciplinary action by either the AABC or the NEBB within the five years preceding Contract Award shall not be eligible to perform any duties related to the HVAC systems, including TAB. All work specified in this Section and in other related Sections performed by the TAB Specialist shall be considered invalid if the TAB Specialist loses its certification prior to Contract completion and must be performed by the approved successor.

1.6 TAB SPECIALIST RESPONSIBILITIES

All TAB work specified herein and in related sections shall be performed under the direct guidance of the TAB Specialist.

PART 2 PRODUCTS (Not Applicable)

PART 3 EXECUTION

3.1 DESIGN REVIEW

The TAB Specialist shall review the Contract Plans and Specifications and advise the Contracting Officer of any deficiencies that would prevent the HVAC systems from effectively operating in accordance with the sequence of operation specified or prevent the effective and accurate TAB of the system. The TAB Specialist shall provide a Design Review Report individually listing each deficiency and the corresponding proposed corrective action necessary for proper system operation.

3.2 TAB RELATED HVAC SUBMITTALS

The TAB Specialist shall prepare a list of the submittals from the Contract Submittal Register that relate to the successful accomplishment of all HVAC TAB. The submittals identified on this list shall be accompanied by a letter of approval signed and dated by the TAB Specialist when submitted to the Government. The TAB Specialist shall also ensure that the location and details of ports, terminals, connections, etc., necessary to perform TAB are identified on the submittals.

3.3 TAB SCHEMATIC DRAWINGS AND REPORT FORMS

A schematic drawing showing each system component, including balancing devices, shall be provided for each system. Each drawing shall be accompanied by a copy of all report forms required by the TAB Standard used for that system. Where applicable, the acceptable range of operation or appropriate setting for each component shall be included on the forms or as an attachment to the forms. The schematic drawings shall identify all testing points and cross reference these points to the report forms and procedures.

3.4 DUCTWORK LEAK TESTING

The TAB Specialist shall witness the Ductwork Leak Testing specified in Section 15895 AIR SUPPLY, DISTRIBUTION, VENTILATION, AND EXHAUST SYSTEM and approve the results as specified in Paragraph TAB RELATED HVAC SUBMITTALS.

3.5 TESTING, ADJUSTING, AND BALANCING

3.5.1 TAB Procedures

Step by step procedures for each measurement required during TAB Execution shall be provided. The procedures shall be oriented such that there is a separate section for each system. The procedures shall include measures to ensure that each system performs as specified in all operating modes, interactions with other components (such as exhaust fans, kitchen hoods, fume hoods, relief vents, etc.) and systems, and with all seasonal operating differences, diversity, simulated loads, and pressure relationships required.

3.5.2 Systems Readiness Check

The TAB Specialist shall inspect each system to ensure that it is complete, including installation and operation of controls, and that all aspects of the facility that have any bearing on the HVAC systems, including installation of ceilings, walls, windows, doors, and partitions, are complete to the extent that TAB results will not be affected by any detail or touch-up work remaining. The TAB Specialist shall also verify that all items such as ductwork and piping ports, terminals, connections, etc., necessary to perform TAB shall be complete during the Systems Readiness

Check.

3.5.3 Preparation of TAB Report

Preparation of the TAB Report shall begin only when the Systems Readiness Report has been approved. The Report shall be oriented so that there is a separate section for each system. The Report shall include a copy of the appropriate approved Schematic Drawings and TAB Related Submittals, such as pump curves, fan curves, etc., along with the completed report forms for each system. The operating points measured during successful TAB Execution and the theoretical operating points listed in the approved submittals shall be marked on the performance curves and tables. Where possible, adjustments shall be made using an "industry standard" technique which would result in the greatest energy savings, such as adjusting the speed of a fan instead of throttling the flow. Any deficiencies outside of the realm of normal adjustments and balancing during TAB Execution shall be noted along with a description of corrective action performed to bring the measurement into the specified range. If, for any reason, the TAB Specialist determines during TAB Execution that any Contract requirement cannot be met, the TAB Specialist shall immediately provide a written description of the deficiency and the corresponding proposed corrective action necessary for proper system operation to the Contracting Officer.

3.5.4 TAB Verification

The TAB Specialist shall recheck ten percent of the measurements listed in the Tab Report and prepare a TAB Verification Report. The measurements selected for verification and the individuals that witness the verification will be selected by the Contracting Officer's Representative (COR). The measurements will be recorded in the same manner as required for the TAB Report. All measurements that fall outside the acceptable operating range specified shall be accompanied by an explanation as to why the measurement does not correlate with that listed in the TAB Report and a description of corrective action performed to bring the measurement into the specified range. If over 20 percent of the measurements selected by the COR for verification fall outside of the acceptable operating range specified, the COR will select an additional 10 percent for verification. If over 20 percent of the total tested (including both test groups) fall outside of the acceptable range, the TAB Report shall be considered invalid and all contract TAB work shall be repeated beginning with the Systems Readiness Check.

3.5.5 Marking of Setting

Following approval of TAB Verification Report, the setting of all HVAC adjustment devices including valves, splitters, and dampers shall be permanently marked by the TAB Specialist so that adjustment can be restored if disturbed at any time.

3.5.6 Identification of Test Ports

The TAB Specialist shall permanently and legibly identify the location points of duct test ports. If the ductwork has exterior insulation, the identification shall be made on the exterior side of the insulation. All penetrations through ductwork and ductwork insulation shall be sealed to prevent air leakage or to maintain integrity of vapor barrier.

-- End of Section --

SECTION 16115

UNDERFLOOR RACEWAY SYSTEM (CELLULAR STEEL FLOOR)

PART 1 GENERAL

1.1 REFERENCES

The publications listed below form a part of this specification to the extent referenced. The publications are referred to in the text by basic designation only.

NATIONAL FIRE PROTECTION ASSOCIATION (NFPA)

NFPA 70	(1996) National Electrical Code

UNDERWRITERS LABORATORIES (UL)

UL 209	(1995) Cellular Metal Floor Raceways and Fittings
UL 870	(1995) Wireways, Auxiliary Gutters, and Associated Fittings

1.2 SUBMITTALS

Government approval is required for submittals with a "GA" designation; submittals having an "FIO" designation are for information only. The following shall be submitted in accordance with Section 01330 SUBMITTAL PROCEDURES:

SD-01 Data

Components; GA|ED. Raceway Cells; GA|ED. Header Ducts; GA|ED. Trench Ducts; GA|ED. Service Outlet Fittings; GA|ED.

Data published by the manufacturer of each item on the above list sufficient to permit verification of the accuracy and completeness of information shown, that the item proposed is of the correct size, properly rated or applied, or is otherwise suitable for the application and fully conforms to the requirements of these specifications. Approval will be based on published literature of the manufacturer or a certification of compliance issued by the manufacturer as evidence of compliance with these provisions.

SD-04 Drawings

Underfloor Raceway System; GA|ED.

Detail drawings consisting of accurate and complete drawings as required to demonstrate compliance with the applicable provisions of the contract. Drawings shall show the proposed layout of the duct system, including steel raceway cells and associated duct equipment. Drawings shall show connections to equipment cabinets, panelboards, and related components. Drawings shall be accurately scaled or dimensioned to indicate the proposed layout of the duct system, construction features of the facility or

building, and equipment to be installed when the installation would impact the layout or usage of the duct system. The layout shall ensure the clearances required for the proper operation, maintenance, and use of the system and facility equipment. Details shall indicate the proposed method of anchorage, leveling, mating and other details of the system components including appurtenances. The exact location of blank ducts, duct markers, inserts, junction boxes, cover plates, service fittings, conduits, wire troughs, panelboards, and related components shall be shown. Each separate item proposed shall be identified by the corresponding item number on the list of equipment and material. Distinction shall be made between active, blank, future, or spare features of the system.

As-Built Drawings; FIO;AR.

As-built drawings showing features of the complete raceway system installed per the approved initial drawings and submitted within 30 calendar days following the completed installation. Any deviations from previously approved drawing shall be indicated on the transmittal form or attachment thereto.

SD-06 Instructions

Underfloor Raceway System; FIO;AR.

Instructions showing the assembly and installation of ducts and duct components shall be approved prior to beginning any installation work.

SD-07 Schedules

Equipment and Materials; FIO;AR.

A complete itemized listing of individual items of equipment and material proposed for incorporation into the work. Each itemization shall include an item number, the quantity of items required or proposed, the name of the manufacturer of each item, the catalog number or similar ordering information, and the nomenclature shown on published literature of the manufacturer.

SD-14 Samples

Service Outlet Fittings; FIO;AR.

Physical examples of proposed equipment.

SD-19 Operation and Maintenance Manuals

Underfloor Raceway System; FIO;AR.

Six copies of instruction manuals, concurrently with the installation drawings, including specific instructions for locating and installing inserts of the preset and afterset types. Manuals shall include a list of recommended spare parts, a list of tools provided, and any other data or drawings required for the maintenance and future use of the duct system. Manuals shall be in suitable binders and properly marked with pertinent contract information, containing dividers and indexes. Revised manuals, or updated inserts, adjusted to show as-built conditions shall be furnished within 30 days after installation is complete.

1.3 STANDARD PRODUCTS

Materials and equipment shall be standard products of a manufacturer regularly engaged in the manufacture of the product and shall essentially duplicate items that have been incorporated into underfloor duct systems for at least 2 years prior to the bid opening.

1.4 DELIVERY, STORAGE, AND HANDLING

Materials delivered prior to use shall be stored off the ground within a completely enclosed structure or shall be completely enclosed within a weatherproof covering. Material shall not be unpacked until needed for installation unless specific arrangements have been approved in advance. At the time of final inspection of the building, material required to be delivered to the Contracting Officer shall be properly packaged, marked, and stored as directed.

1.5 TOOLS

Two sets of tools for removing junction box and trench duct covers shall be furnished.

1.6 SYSTEM DESCRIPTION

A complete underfloor raceway system including interface components shall be provided under this section. Wiring or cable, if required, will be furnished and installed under other sections of the specifications. Under this section, the wire or cable shall be connected to devices or terminal blocks at the service fittings or shall be extended into the fitting for future connection by others if so indicated on the plans.

PART 2 PRODUCTS

2.1 COMPONENTS

2.1.1 System Requirements

A complete underfloor raceway system shall be furnished. The system shall include raceway cells in the cellular steel flooring trench duct, junction boxes, fitting elbows, reducers, panel risers, cabinet connectors, cell entry pull boxes, expansion joints, outlets, conduits, connections, and necessary fittings to form a complete installation. Ducts shall be equipped with access holes or access units, adapters, boxes, bushings, caps or cap assemblies, connectors, couplings, cover plates, dividers, elbows, end plates, expansion devices, fittings, gaskets, grommets, inserts, leveling devices, notched void enclosures that accurately mate with the cellular steel flooring, markers, offsets, plugs, rings, risers, screws, strap supports, tees, tongs, wire troughs, and components specified or otherwise required to complete the installation. Equipment and materials shall be products of a single manufacturer to the extent practicable.

2.1.2 Coordination - General Requirement

Layout and Contractor selections shall be fully coordinated with the architectural, structural, mechanical, and electrical work throughout all phases of this project including field modifications. The cellular steel flooring will be provided under Section 05300 STEEL DECKING. The underfloor raceway system shall be coordinated with the cellular steel flooring provisions to ensure proper depth, alignment and anchorage of ducts and appurtenances. Thickness and finishes of components furnished

under this section shall be consistent with that specified for the cellular floor and shall be not less than the minimum required by UL 209. The locations of raceway components shown on plans are intended to be approximate unless dimensions have been included; routings of feeders and interconnections are schematic. The overall configuration, relative proportions, and general locations of devices should be maintained. Detailed drawings of the Contractor's proposed system shall be prepared as required under paragraph SUBMITTALS and shall include notes, dimensions, details or other means to show that interfacing with, or accommodation to, other work has been accomplished. Errors or conflicts encountered in the course of the project shall be brought promptly to the Contracting Officer's attention for resolution. When the products of more than one manufacturer will be utilized, the Contractor shall coordinate with the manufacturers to ensure that the different products are compatible, that supplemental components are included if necessary, and that the products are installed per the manufacturer's prescribed procedures.

2.1.3 Architectural Considerations

Exposed portions of the system, such as junction box covers or trench duct covers shall have finish treatments or lay-in materials compatible with the architectural features of the surrounding surfaces. For specific requirements, see Section 09680 Carpet. Accessories necessary to accommodate specific finished floor configurations shall be selected and installed in accordance with the recommendations and instructions of the manufacturer. Modifications of standard products, if required, shall be performed by or approved by the manufacturer.

2.2 RACEWAY CELLS

Raceway cells and fittings in the cellular steel floor shall conform to UL 209. Cellular steel raceways shall be equipped with inserts and service fittings.

2.3 TRENCH DUCTS

Trench ducts shall be provided as raceways for the feeder portion of wiring for the different services specified. Each duct shall be divided into separate compartment raceways to accommodate the wiring of each service. The design and construction of trench ducts shall permit removal of the cover plates to allow free access to the trench for the installation of wiring without the necessity of removing cross bars, straps, or similar trench spanning items. Ducts shall be provided with cover plates, dividers or partitions, leveling devices, trim strips, and welding clips or similar provisions for welding the ducts to the cellular steel flooring. The side rails of ducts shall be equipped with screw slots to permit anchorage of the cover plates at random locations along the ducts. Screws shall be provided to fasten cover plates to the ducts. Heads of screws shall be suitable for the floor finishes scheduled to ensure a flush installation. Duct dimensions shall be as shown on the plans.

2.3.1 Trim Strips

Trim strip material shall be plastic or metal with an exposed trim edge of not less than 3.2 mm (1/8 inch) and shall be securely attached along the entire length of the trench ducts on each side. The trim strips shall be covered at the factory to prevent damage to the exposed surface prior to and during installation.

2.3.2 Welding Clips

Welding clips shall be provided on both outside surfaces of trench duct railings, and shall be spaced for welding to the cellular steel floor at not more than 914.4 mm (36 inch) intervals. Each welding clip shall be sized to permit a fillet type weld at least 25 mm in length.

2.3.3 Dividers

Dividers or partitions shall be provided in the trench ducts to sectionalize the trench into separate compartments or raceways to accommodate wiring for the services specified. Dividers or support posts shall also be provided to support cover plates at not more than 381 mm (15 inch) intervals. Top of dividers shall have a bearing surface at least 12.7 mm (1/2 inch) in width. Dividers shall have a vertical adjustment feature to permit leveling during installation, as required for proper support of cover plates.

2.3.4 Cover Plates

Cover plates shall be not less than 6.2 mm (1/4 inch) thick flat steel with a maximum weight of 27.2 kg (60 pounds) each and a maximum dimension not exceeding 914.4 mm (36 inches). Plates shall have factory drilled and finished screw holes. Abutting edges of cover plates shall be gasketed. Gaskets shall also be provided between the bottom edges of cover plates and the supporting rail surfaces on each side of trench ducts, and at other locations as required to exclude dust, dirt, and foreign objects from entering the raceway system interior. Cover plate system shall accommodate the architectural floor finish material scheduled. Tools or other items shall be provided to facilitate the removal, replacement, and anchorage of component parts of the cover plate system.

2.4 WIRE TROUGHS

Wire troughs shall meet construction requirements of UL 870 and comply with NFPA 70.

PART 3 EXECUTION

3.1 GENERAL

Quantity, sizes, and arrangement of raceway system shall be as shown on the plans. Revisions implemented during construction shall be incorporated into the as-built installation drawings.

3.2 CELLULAR STEEL FLOOR CELLS

3.2.1 Installation

Steel floor cells designated for use in the raceway system shall be free of dirt and foreign material. Cells shall be aligned longitudinally so that no sharp edges which might damage insulation will protrude into the raceway interior. Where the cellular floor is not continuous over the supporting beams, the slots shall be permanently covered with cover plates. Screws shall not penetrate into the interior of cells. Where the cellular floor is not provided with slots, the abutting joints over the supporting beams shall be covered with tape as recommended by the cellular floor manufacturer. Where cells used as raceways are cut for any purpose other than for installation or raceway fittings and outlets, cut cells shall be

completely closed and sealed and jack headers shall be installed to form continuous, unobstructed wiring raceways for activated cell groups.

3.3 TRENCH DUCT

3.3.1 Services

Each trench duct compartment provided for the services specified shall connect and give access to corresponding raceway cells, trench duct compartments and raceways between the trench ducts and equipment, equipment cabinets, or panelboards.

3.3.2 Installation

Positive and accurate coupling devices shall be provided to ensure the proper alignment and leveling of duct sections before welding them in place. Alignment and leveling of trench duct sections, exclusive of dividers, and welding shall be accomplished before the concrete floor is placed. Welding clips shall be welded to the steel floor with welds not less than 25 mm in length.

3.3.2.1 Dividers

Dividers shall be adjusted to the correct position to provide bearing support for the cover and to keep the cover level. Divider adjustments shall be made after the concrete has hardened. Dividers shall be adjusted, and tack welded into place, at intervals not exceeding 900 mm with welds not less than 15 mm long.

3.4 JUNCTION BOX INSTALLATIONS

Top of each junction box shall be adjusted and leveled to the proper height in accordance with manufacturer's instructions, to ensure a flush installation with the concrete floor and to accommodate the floor finish schedule.

3.5 DUCT MARKERS

3.5.1 Installation

Corrosion resistant marker screws shall be installed at selected underfloor raceway cell locations and on systems not having preset inserts. When resilient flooring is placed, markers shall be extended through the flooring with grommeted screws. Duct marker screws shall be kept free of cement by coating with grease or covering with tape prior to placing of the concrete floor fill.

3.5.2 Location

Marker screws shall be installed using a minimum of two markers per system per 18.6 square meters (200 square feet) and not less than two markers per system in each room. Markers are not required where junction boxes indicate cell locations. Markers shall not be placed within 300 mm of module boundary line.

3.6 WIRE TROUGHS

Wire troughs shall be provided where indicated for connections between panelboards and underfloor duct.

3.7 BOUNDARIES

3.7.1 Modules

Header and trench ducts shall not be located within 300 mm of structural concrete framing members or window mullion lines, except at concentration points near electric or telephone closets.

3.7.2 Walls

Stub ends of underfloor raceway system perpendicular to walls shall be extended as close as practicable to wall line.

3.7.3 Expansion Joints

Expansion devices shall be installed wherever header duct or tench duct crosses building expansion joints. A bonding strap shall be included to ensure ground continuity.

3.8 INSPECTION

Upon completion of the assembly of the underfloor raceway system, and before cells and ducts are covered, inspection in the presence of the Contracting Officer shall show cells, ducts, boxes and other related equipment to be in place. Components shall be replaced with new parts if damaged, blemished, or otherwise marred prior to or during placing concrete. Entire system must be free of obstructions and moisture after placing concrete. Ducts shall be thoroughly swabbed out before floor finish is applied and wiring is installed.

-- End of Section --

SECTION 16410

AUTOMATIC TRANSFER SWITCH

PART 1 GENERAL

1.1 REFERENCES

The publications listed below form a part of this specification to the extent referenced. The publications are referred to in the text by basic designation only.

INSTITUTE OF ELECTRICAL AND ELECTRONICS ENGINEERS (IEEE)

IEEE ANSI/IEEE C37.90.1	(1989; R 1994) IEEE Standard Surge Withstand Capability (SWC) Tests for Protective Relays and Relay Systems

NATIONAL ELECTRICAL MANUFACTURERS ASSOCIATION (NEMA)

NEMA ICS 1	(1993) Industrial Controls and Systems
NEMA ICS 2	(1993) Industrial Control and Systems Controllers, Contactors, and Overload Relays Rated Not More Than 2,000 Volts AC or 750 Volts DC
NEMA ICS 4	(1993) Industrial Control and Systems Terminal Blocks
NEMA ICS 6	(1993) Industrial Control and Systems Enclosures

NATIONAL FIRE PROTECTION ASSOCIATION (NFPA)

NFPA 70	(1996; Errata) National Electrical Code
NFPA 110	(1996) Emergency and Standby Power Systems

UNDERWRITERS LABORATORIES (UL)

UL 1008	(1989; R Sep 97) Transfer Switch Equipment

1.2 GENERAL REQUIREMENTS

1.2.1 Standard Product

The automatic transfer switch controls shall be completely compatible with the existing "Onan", Model 3500 FN L354320, 350 kW/437.5kVA, 3-Phase, 4-wire 277/840 volts generator. Material and equipment shall be a standard product of a manufacturer regularly engaged in the manufacture of the product and shall essentially duplicate items that have been in satisfactory use for at least 2 years prior to bid opening. The experience use shall include applications of equipment and materials under similar circumstances and of the same design and rating as the switches specified. Equipment items shall be capable of being serviced by an organization that

is, in the opinion of the Contracting Officer, reasonably convenient to the site.

1.2.2 Nameplates

Nameplates shall be made from a corrosion-resistant metal with not less than 6.4 mm (1/4 inch) tall raised or engraved characters. The nameplate shall be mounted to the front of the enclosure and shall comply with nameplate requirements covered by NEMA ICS 2.

1.3 SUBMITTALS

Government approval is required for submittals with a "GA" designation; submittals having an "FIO" designation are for information only. The following shall be submitted in accordance with Section 01330 SUBMITTAL PROCEDURES:

SD-04 Drawings

Switches; GA|ED.

A one-line diagram of each ATS and elementary, or schematic, and wiring diagram of the unit. An interface equipment connection diagram showing all conduit and wiring between the ATS and all other related equipment. Device and nameplate numbers and item numbers shown on the list of equipment and material shall appear on drawings wherever the item of equipment or material appears. The one-line diagram shall show interlocking provisions and cautionary notes, if any. Operating instructions shall be shown on the one-line diagram or separately, at the discretion of the Contractor. The manufacturer's approved operating instructions for the ATS shall be laminated in plastic and permanently secured to the cabinet where the operator can see them. The one-line and elementary or schematic diagram shall be laminated in plastic and permanently secured to the inside of the front enclosure door. Unless otherwise approved, the one-line and elementary or schematic diagrams shall appear on the same drawing.

SD-07 Schedules

Material, Equipment, and Fixture Lists; GA|ED.

A complete list of equipment and material proposed, containing an adequate description of each separate item of equipment or material recommended.

SD-09 Reports

Tests; FIO;ARSD-.

Certified factory and field test reports, within 14 days following completion of the tests. Reports shall be certified and dated and shall demonstrate that the tests were successfully completed prior to shipment of the equipment.

SD-13 Certificates

Equipment and Materials; FIO;AR.

Evidence of a UL listing, or conformance with applicable NEMA standards. Certificates of compliance will be accepted as proof of compliance when equipment or materials are required to conform to UL standards or to be

manufactured and/or tested by NEMA standards. Such certificates are not required if manufacturer's published data, submitted and approved, reflect a UL listing or conformance with applicable publications of NEMA. Proof of the listing by UL and conformance with the applicable publications, of NEMA do not relieve the Contractor of compliance with other provisions of these specifications.

Switching Equipment; FIO;AR.

Proof of listing by UL sufficient to demonstrate that the ATS conform to the specified requirements except as otherwise specified. Modification to a former UL listed ATS model shall require written UL approval of the modification. A copy of the written UL approval for modifications shall be included with the certified test reports specified. In lieu of the proof of listing by UL, the Contractor may have identical tests required by UL 1008 and by NEMA ICS 2 performed by a nationally recognized independent testing laboratory. UL and NEMA or other certified test reports shall be included to demonstrate the sequence of laboratory testing and that the overload, endurance, and temperature rise tests were conducted in that specific sequence of tests. The certified test reports shall show the date, times and duration of the overload, endurance, and temperature tests, and that the unit under test was not de-energized during the test sequence. Other tests shall be conducted in the sequence shown in paragraph TESTING unless otherwise justified and approved.

1.4 OPERATION AND MAINTENANCE MANUALS

Six copies of switching equipment operating manual outlining the step-by-step procedures required for system startup, operation and shutdown shall be provided. The manuals shall include the manufacturer's name, model number, service manual, parts list, and brief description of all equipment and basic operating features. The manufacturer's spare parts data shall be included in the manuals and correlated with the respective item of equipment included as a component part of the switch assembly. Spare parts data shall include the recommended spare parts published by the manufacturer of the equipment. The source of supply and the current cost of recommended spare parts shall be indicated. Six complete copies of maintenance manual listing routine maintenance, possible breakdowns, repairs and troubleshooting guide shall be provided. The manuals shall include simplified wiring and control diagrams for the system as installed.

PART 2 PRODUCTS

2.1 AUTOMATIC TRANSFER SWITCH (ATS)

ATS shall be the electrically-operated type that is mechanically held in both operating positions. ATS shall be suitable for use in standby systems described in NFPA 70. ATS shall be UL listed unless the Contractor retains a nationally recognized independent testing laboratory to conduct tests as specified in paragraph SUBMITTALS, and test reports are approved as being equivalent of test results and certified test reports as those determined and reported by UL. ATS shall be the electrically-operated contactor type which shall be manufactured and tested in accordance with applicable requirements of IEEE ANSI/IEEE C37.90.1, NEMA ICS 1, NEMA ICS 2, and UL 1008. ATS shall also conform to NFPA 110 except that the ATS shall not be equipped with either overload or fault current protective devices. ATS shall be designed and manufactured to prevent stops in an intermediate or neutral position during transfer by the use of electrical actuators and stored-energy mechanisms. ATS designed and manufactured to effect

transfers by a walking-beam or a similar device to engage handles of circuit breakers to accomplish transfer between power sources are unacceptable. Each pole of the doublethrow ATS shall have separate arcing contacts of a nonwelding type with switch contacts installed to permit viewing of the contacts without disassembly of the ATS or removal of the entire contact enclosure, or component parts of the ATS. ATS shall be rated for continuous duty at the continuous current rating specified. All rating data shall be shown on detail drawings, and shall equal or exceed those specified. Switches shall be adequately rated for the application indicated, and shall have the following characteristics:

a. Voltage: 480 volts ac.

b. Number of Phases: Three.

c. Number of Wires: Four.

d. Frequency: 60 Hz.

e. Number of Switched Poles: Three.

f. Type of Load: Total system load shown.

g. Continuous Phase or Main Current Rating: Equal to or exceed the rating shown but, in no case, less than 125 percent of the full load rating of the emergency power source.

h. ATS Withstand Rating (Fault Current Availability Rating): Rated to withstand an available fault or short-circuit current of 65,000 amperes, RMS symmetrical, at a power factor between 0.0 and approximately 0.20, for a duration of 3 cycles at a maximum voltage of 480 ac.

i. Overload Rating: 4,800 amperes, RMS symmetrical.

j. Nonwelding of Contacts: Rated for nonwelding of contacts when used with the feeder overcurrent devices indicated on the drawings and with the available fault current specified herein.

k. Main Contacts: Contacts shall have a silver composition and shall be protected by approved arcing contacts.

2.1.1 Override Time Delay

Time delay to override monitored source deviation shall be adjustable from 0.5 to 6 seconds and factory set at 2 seconds. The device shall detect and respond to a sustained voltage drop of 30 percent of nominal voltage between any two of the normal supply conductors and initiate transfer action to the emergency source and start the engine-driven generator set after the set time period. The pickup voltage shall be adjustable between 85 and 100 percent of nominal and factory set 90 percent. The dropout voltage shall be adjustable from 75 to 98 percent of the pickup value, and factory set at 70 percent of nominal voltage.

2.1.2 Transfer Time Delay

Time delay before transfer to the emergency power source shall be adjustable from 0 to 2 minutes and factory set at 0 minutes. The device shall monitor the frequency and voltage of the emergency power source and

transfer when frequency and voltage is stabilized at or above 90 percent of rated values. The pickup voltage shall be adjustable from 85 to 100 percent of nominal, and factory set at 90 percent. The pickup frequency shall be adjustable from 90 to 100 percent of nominal and factory set at 90 percent.

2.1.3 Return Time Delay

Time delay before return transfer to the normal power source shall be adjustable from 0 to 30 minutes and factory set at 15 minutes. The time delay shall be automatically defeated upon loss or sustained undervoltage of the emergency power source, provided that the normal supply has been restored.

2.1.4 Auxiliary Contacts

Two normally open and two normally closed auxiliary switches shall operate when the transfer switch is connected to the normal power source, and two normally open and two normally closed switches shall operate when the transfer switch is connected to the emergency power source.

2.1.5 Supplemental Features

The ATS shall also be furnished with the following:

a. Engine start contact.

b. Alternate source monitor.

c. Test switch.

d. Manual return-to-normal switch.

2.1.6 Operator

A manual operator, conforming to the applicable provisions of UL 1008, shall be provided to permit manual operation of the ATS without opening the ATS enclosure, and incorporate features to prevent operation by other than authorized and qualified personnel. The ATS shall be designed for use of the manual operator under no load conditions in the usual instances, but with the capability of operation under load conditions when necessary.

2.1.7 Green Indicating Lights

A green indicating light shall supervise the normal power source and shall have a nameplate engraved NORMAL.

2.1.8 Red Indicating Lights

A red indicating light shall supervise the emergency power source and shall have a nameplate engraved EMERGENCY.

2.2 ENCLOSURE

ATS and accessories shall be in a free-standing, floor-mounted and unventilated NEMA ICS 6, smooth sheet metal enclosure constructed in accordance with UL 1008. Gauge of the metal shall be not less than No. 14. Doors shall have suitable hinges, locking handle latch, and gasketed jambs. Enclosure shall be equipped with at least two approved size and type of

grounding lugs for the purpose of grounding the enclosure using No. 4 AWG copper conductors to the facility ground system. Factory wiring within the enclosure and the Contractor's field wiring terminating within the enclosure shall comply with NFPA 70. If wiring is not color coded, wires shall be permanently tagged near the terminal at each end with the wire number shown on approved detail drawings. Terminal blocks shall conform to NEMA ICS 4. Terminal facilities shall be suitably arranged for entrance of external conductors from the top and bottom. Main switch terminals, including the neutral terminal, shall be of the pressure type and suitable for the termination of the external copper conductors.

2.2.1 Construction

Enclosure shall be constructed for convenient removal and replacement of contacts, coils, springs and control devices from the front without the disconnection of external power conductors or the removal or disassembly of major components.

2.2.2 Finishing

Painting required for surfaces not otherwise specified and finish painting of items only primed at the factory shall be as specified in Section 09900 PAINTING, GENERAL.

2.3 TESTING

2.3.1 Laboratory Testing

Testing shall be completed on the ATS to be supplied under these specifications, or shall have been completed on a previous, randomly selected standard production ATS unit having the same model number and capacity as the ATS specified. Overload, endurance and temperature tests shall be conducted in that sequence and within the shortest practicable period of time on the same ATS without de-energization of that ATS under test. The test sequence for the ATS listed below shall be followed. No deviation will be granted that is less stringent. Approval will not be granted to deviate from the overload, endurance and temperature test sequence.

a. General

b. Normal Operation

c. Overvoltage

d. Undervoltage

e. Overload

f. Endurance

g. Temperature rise

h. Dielectric Voltage - Withstand

i. Contact Opening

j. Dielectric Voltage - Withstand (Repeated)

k. Withstand

l. Instrumentation and Calibration of High Capacity Circuits

m. Closings

n. Dielectric Voltage - Withstand (Repeated)

o. Strength of Insulating Base and Support

PART 3 EXECUTION

3.1 INSTALLATION

The ATS shall be installed as indicated and in accordance with approved manufacturer's instructions.

3.2 OPERATIONAL TESTING

Following completion of the installation of the ATS, the Contractor shall perform operational tests in accordance with the written instructions of the manufacturer after having made proper adjustments and settings to demonstrate that the ATS functions satisfactorily and as specified. The Contractor shall advise the Contracting Officer not less than 5 work days prior to the scheduled date or dates for operational testing, and shall provide certified field test reports to the Contracting Officer within 2 calendar weeks following successful completion of the operational tests. The test reports shall describe all adjustments and settings made and all operational tests performed.

-- End of Section --

SECTION 16415

ELECTRICAL WORK, INTERIOR

PART 1 GENERAL

1.1 REFERENCES

The publications listed below form a part of this specification to the extent referenced. The publications are referred to in the text by basic designation only.

AMERICAN NATIONAL STANDARDS INSTITUTE (ANSI)

ANSI C39.1	(1981; R 1992) Requirements for Electrical Analog Indicating Instruments
ANSI C80.5	(1995) Rigid Aluminum Conduit
ANSI C82.4	(1992) Ballasts for High-Intensity-Discharge and Low-Pressure Sodium Lamps (Multiple-Supply Type)

AMERICAN SOCIETY FOR TESTING AND MATERIALS (ASTM)

ASTM B 1	(1990) Hard-Drawn Copper Wire
ASTM B 8	(1993) Concentric-Lay-Stranded Copper Conductors, Hard, Medium-Hard, or Soft
ASTM D 709	(1992) Laminated Thermosetting Materials
ASTM D 4059	(1991) Analysis of Polychlorinated Biphenyls in Insulating Liquids by Gas Chromatography

CODE OF FEDERAL REGULATIONS (CFR)

47 CFR 18	Industrial, Scientific, and Medical Equipment

INSTITUTE OF ELECTRICAL AND ELECTRONICS ENGINEERS (IEEE)

IEEE C37.20.1	(1993) Metal-Enclosed Low-Voltage Power Circuit-Breaker Switchgear
IEEE C62.41	(1991) Surge Voltages in Low-Voltage AC Power Circuits
IEEE Std 81	(1983) Guide for Measuring Earth Resistivity, Ground Impedance, and Earth Surface Potentials of a Ground System (Part 1)

NATIONAL ELECTRICAL MANUFACTURERS ASSOCIATION (NEMA)

NEMA AB 1	(1993) Molded Case Circuit Breakers and Molded Case Switches
NEMA FU 1	(1986) Low Voltage Cartridge Fuses
NEMA ICS 1	(1993) Industrial Control and Systems
NEMA ICS 2	(1993) Industrial Control and Systems Controllers, Contactors, Overload Relays Rated Not More Than 2,000 Volts AC or 750 DC
NEMA ICS 3	(1993) Industrial Control and Systems Factory Built Assemblies
NEMA ICS 6	(1993) Industrial Control and Systems Enclosures
NEMA LE 4	(1987) Recessed Luminaires, Ceiling Compatibility
NEMA MG 1	(1993; Rev 1; Rev 2; Rev 3) Motors and Generators
NEMA MG 10	(1994) Energy Management Guide for Selection and Use of Polyphase Motors
NEMA OS 1	(1989) Sheet-Steel Outlet Boxes, Device Boxes, Covers, and Box Supports
NEMA PB 1	(1990) Panelboards
NEMA PB 2	(1995) Deadfront Distribution Switchboards
NEMA RN 1	(1989) Polyvinyl-Chloride (PVC) Externally Coated Galvanized Rigid Steel Conduit and Intermediate Metal Conduit
NEMA ST 20	(1992) Dry-Type Transformers for General Applications
NEMA TC 2	(1990) Electrical Polyvinyl Chloride (PVC) Tubing (EPT) and Conduit (EPC-40 and EPC-80)
NEMA TC 13	(1993) Electrical Nonmetallic Tubing (ENT)
NEMA VE 1	(1991) Metal Cable Tray Systems
NEMA WD 1	(1983; R 1989) General Requirements for Wiring Devices
NEMA WD 6	(1988) Wiring Devices - Dimensional Requirements

NATIONAL FIRE PROTECTION ASSOCIATION (NFPA)

NFPA 70	(1996) National Electrical Code

NFPA 101	(1997) Safety to Life from Fire in Buildings and Structures

UNDERWRITERS LABORATORIES (UL)

UL-03	(1996; Supple) Electrical Construction Materials Directory
UL 1	(1993; Rev thru Jan 1995) Flexible Metal Conduit
UL 4	(1986; Rev thru Nov 1990) Armored Cable
UL 5	(1995) Surface Metal Raceways and Fittings
UL 6	(1993; Rev Mar 1996) Rigid Metal Conduit
UL 20	(1995; Rev thru Apr 1997) General-Use Snap Switches
UL 44	(1997) Thermoset-Insulated Wires and Cables
UL 50	(1995; Rev Oct 1996) Enclosures for Electrical Equipment
UL 67	(1993; Rev thru Dec 1993) Panelboards
UL 83	(1996) Thermoplastic-Insulated Wires and Cables
UL 98	(1994; R Oct 1995) Enclosed and Dead-Front Switches
UL 198B	(1995) Class H Fuses
UL 198C	(1986; Rev thru Jun 1993) High-Interrupting-Capacity Fuses, Current-Limiting Types
UL 198D	(1995) Class K Fuses
UL 198E	(1988; Rev Jul 1988) Class R Fuses
UL 198G	(1988; Rev May 1988) Fuses for Supplementary Overcurrent Protection
UL 198H	(1988; Rev thru Nov 1993) Class T Fuses
UL 198L	(1995; Rev May 1995) D-C Fuses for Industrial Use
UL 360	(1996; Rev Mar 1997) Liquid-Tight Flexible Steel Conduit
UL 467	(1993; Rev thru Aug 1996) Grounding and Bonding Equipment
UL 486A	(1991; Rev Oct 1991) Wire Connectors and Soldering Lugs for Use with Copper

	Conductors
UL 486B	(1997) Wire Connectors for Use with Aluminum Conductors
UL 486C	(1997) Splicing Wire Connectors
UL 486E	(1994; Rev thru Feb 1997) Equipment Wiring Terminals for Use with Aluminum and/or Copper Conductors
UL 489	(1996; Rev May 1997) Molded-Case Circuit Breakers, Molded-Case Switches, and Circuit-Breaker Enclosures
UL 498	(1996) Attachment Plugs and Receptacles
UL 506	(1994; Rev Jul 1994) Specialty Transformers
UL 508	(1993) Industrial Control Equipment
UL 510	(1994) Insulating Tape
UL 512	(1993; R Dec 1995) Fuseholders
UL 514A	(1996) Metallic Outlet Boxes
UL 514B	(1996) Fittings for Conduit and Outlet Boxes
UL 514C	(1996) Nonmetallic Outlet Boxes, Flush-Device Boxes, and Covers
UL 542	(1994; Rev May 1997) Lampholders, Starters, and Starter Holders for Fluorescent Lamps
UL 651	(1995; Rev Jan 1997) Schedule 40 and 80 Rigid PVC Conduit
UL 651A	(1995; Rev Sep 1996) Type EB and A Rigid PVC Conduit and HDPE Conduit
UL 797	(1993; Rev thru Mar 1997) Electrical Metallic Tubing
UL 817	(1994; Rev thru Feb 1997) Cord Sets and Power-Supply Cords
UL 845	(1995; Rev Feb 1996) Motor Control Centers
UL 854	(1996; Rev May 1996) Service-Entrance Cables
UL 869A	(1993; Rev Apr 1994) Reference Standard for Service Equipment
UL 891	(1994; Rev thru Jan 1995) Dead-Front Switchboards

UL 924	(1995; Rev thru May 95) Emergency Lighting and Power Equipment
UL 935	(1995; Rev thru Apr 1997)Fluorescent-Lamp Ballasts
UL 943	(1993; Rev thru Mar 1997)Ground-Fault Circuit Interrupters
UL 1004	(1994; Rev thru Feb 1997) Electric Motors
UL 1022	(1994) Line Isolation Monitors
UL 1029	(1994; Rev Sep 1995) High-Intensity-Discharge Lamp Ballasts
UL 1047	(1995) Isolated Power Systems Equipment
UL 1242	(1996) Intermediate Metal Conduit
UL 1449	(1985; Errata Apr 1986) Transient Voltage Surge Suppressors
UL 1569	(1995) Metal-Clad Cables
UL 1570	(1995) Fluorescent Lighting Fixtures
UL 1571	(1991; Rev thru Mar 95) Incandescent Lighting Fixtures
UL 1572	(1995; Rev thru Sep 96) High Intensity Discharge Lighting Fixtures
UL 1660	(1994) Liquid-Tight Flexible Nonmetallic Conduit

1.2 GENERAL

1.2.1 Rules

The installation shall conform to the requirements of NFPA 70 and NFPA 101, unless more stringent requirements are indicated herein or shown.

1.2.2 Coordination

The drawings indicate the extent and the general location and arrangement of equipment, conduit, and wiring. The Contractor shall become familiar with all details of the work and verify all dimensions in the field so that the outlets and equipment shall be properly located and readily accessible. Lighting fixtures, outlets, and other equipment and materials shall be located to avoid interference with mechanical or structural features; otherwise, lighting fixtures shall be symmetrically located according to the room arrangement when uniform illumination is required, or asymmetrically located to suit conditions fixed by design and shown. Raceways, junction and outlet boxes, and lighting fixtures shall not be supported from sheet metal roof decks. If any conflicts occur necessitating departures from the drawings, details of and reasons for departures shall be submitted and approved prior to implementing any

change. The Contractor shall coordinate electrical work with the HVAC and electrical drawings and specifications and provide power related wiring.

1.2.3 Special Environments

1.2.3.1 Weatherproof Locations

Wiring, Fixtures, and equipment in designated locations shall conform to NFPA 70 requirements for installation in damp or wet locations.

1.2.3.2 Ducts, Plenums and Other Air-Handling Spaces

Wiring and equipment in ducts, plenums and other air-handling spaces shall be installed using materials and methods in conformance with NFPA 70unless more stringent requirements are indicated in this specification or on the contract drawings.

1.2.4 Standard Products

Material and equipment shall be a standard product of a manufacturer regularly engaged in the manufacture of the product and shall essentially duplicate items that have been in satisfactory use for at least 2 years prior to bid opening.

1.2.5 NAMEPLATES

1.2.5.1 Identification Nameplates

Major items of electrical equipment and major components shall be permanently marked with an identification name to identify the equipment by type or function and specific unit number as indicated. Designation of motors shall coincide with their designation in the motor control center or panel. Unless otherwise specified, identification nameplates shall be made of laminated plastic in accordance with ASTM D 709 with black outer layers and a white core. Edges shall be chamfered. Plates shall be fastened with black-finished round-head drive screws, except motors, or approved nonadhesive metal fasteners. When the nameplate is to be installed on an irregular-shaped object, the Contractor shall devise an approved support suitable for the application and ensure the proper installation of the supports and nameplates. In all instances, the nameplate shall be installed in a conspicuous location. At the option of the Contractor, the equipment manufacturer's standard embossed nameplate material with black paint-filled letters may be furnished in lieu of laminated plastic. The front of each panelboard, motor control center, switchgear, and switchboard shall have a nameplate to indicate the phase letter, corresponding color and arrangement of the phase conductors. The following equipment, as a minimum, shall be provided with identification nameplates:

Minimum 6.4 mm High Letters	Minimum 3.2 mm High Letters
Panelboards	Control Power Transformers
Starters	Control Devices
Safety Switches	
Motor Control Centers	
Transformers	
Equipment Enclosures	
Switchgear	
Switchboards	

Minimum 6.4 mm High Letters Motors	Minimum 3.2 mm High Letters

Each panel, section, or unit in motor control centers, switchgear or similar assemblies shall be provided with a nameplate in addition to nameplates listed above, which shall be provided for individual compartments in the respective assembly, including nameplates which identify "future," "spare," and "dedicated" or "equipped spaces."

1.2.6 As-Built Drawings

Following the project completion or turnover, within 30 days the Contractor shall furnish two sets of as-built drawings to the Contracting Officer.

1.3 SUBMITTALS

Government approval is required for submittals with a "GA" designation; submittals having an "FIO" designation are for information only. The following shall be submitted in accordance with Section 01330 SUBMITTAL PROCEDURES:

SD-01 Data

Fault Current and Protective Device Coordination Study; GA|ED.

The study shall be submitted along with protective device equipment submittals. No time extensions or similar contract modifications will be granted for work arising out of the requirements for this study. Approval of protective devices proposed shall be based on recommendations of this study, The Government shall not be held responsible for any changes to equipment, device ratings, settings, or additional labor for installation of equipment or devices ordered and/or procured prior to approval of the study.

Manufacturer's Catalog; GA|ED.

Data composed of catalog cuts, brochures, circulars, specifications, product data, and printed information in sufficient detail and scope to verify compliance with the requirements of the contract documents.

Material, Equipment, and Fixture Lists; GA|ED.

A complete itemized listing of equipment and materials proposed for incorporation into the work. Each entry shall include an item number, the quantity of items proposed, and the name of the manufacturer of each item.

Installation Procedures; FIO;AR.

Installation procedures for rotating equipment, transformers, switchgear, battery systems, voltage regulators, and grounding resistors. Procedures shall include diagrams, instructions, and precautions required to install, adjust, calibrate, and test devices and equipment.

SD-04 Drawings

Interior Electrical Equipment; GA|ED.

Detail drawings consisting of equipment drawings, illustrations, schedules, instructions, diagrams, and other information necessary to define the installation. Detail drawings shall show the rating of items and systems and how the components of an item and system are assembled, function together, and how they will be installed on the project. Data and drawings for component parts of an item or system shall be coordinated and submitted as a unit. Data and drawings shall be coordinated and included in a single submission. Multiple submissions for the same equipment or system are not acceptable except where prior approval has been obtained from the Contracting Officer. In such cases, a list of data to be submitted later shall be included with the first submission. Detail drawings shall show physical arrangement, construction details, connections, finishes, materials used in fabrication, provisions for conduit or busway entrance, access requirements for installation and maintenance, physical size, electrical characteristics, foundation and support details, and equipment weight. Drawings shall be drawn to scale and/or dimensioned. Optional items shall be clearly identified as included or excluded. Detail drawings shall as a minimum include:

a. Transformers.

b. Switchgear.

c. Voltage regulators.

d. Motors and rotating machinery.

e. Motor control centers.

f. Single line electrical diagrams including primary, metering, sensing and relaying, control wiring, and control logic.

g. Sway bracing for suspended luminaires.

Structural drawings showing the structural or physical features of major equipment items, components, assemblies, and structures, including foundations or other types of supports for equipment and conductors. These drawings shall include accurately scaled or dimensioned outline and arrangement or layout drawings to show the physical size of equipment and components and the relative arrangement and physical connection of related components. Weights of equipment, components and assemblies shall be provided when required to verify the adequacy of design and proposed construction of foundations or other types of supports. Dynamic forces shall be stated for switching devices when such forces must be considered in the design of support structures. The appropriate detail drawings shall show the provisions for leveling, anchoring, and connecting all items during installation, and shall include any recommendations made by the manufacturer.

Electrical drawings including single-line and three-line diagrams, and schematics or elementary diagrams of each electrical system; internal wiring and field connection diagrams of each electrical device when published by the manufacturer; wiring diagrams of cabinets, panels, units, or separate mountings; interconnection diagrams that show the wiring between separate components of assemblies; field connection diagrams that show the termination of wiring routed between separate items of equipment; internal wiring diagrams of equipment showing wiring as actually provided for this project. Field wiring connections shall be clearly identified.

If departures from the contract drawings are deemed necessary by the Contractor, complete details of such departures, including changes in related portions of the project and the reasons why, shall be submitted with the detail drawings. Approved departures shall be made at no additional cost to the Government.

As-Built Drawings; GA|ED.

The as-built drawings shall be a record of the construction as installed. The drawings shall include all the information shown on the contract drawings, deviations, modifications, and changes from the contract drawings, however minor. The as-built drawings shall be kept at the job site and updated daily. The as-built drawings shall be a full-sized set of prints marked to reflect all deviations, changes, and modifications. The as-built drawings shall be complete and show the location, size, dimensions, part identification, and other information. Additional sheets may be added. The as-built drawings shall be jointly inspected for accuracy and completeness by the Contractor's quality control representative and by the Contracting Officer prior to the submission of each monthly pay estimate. Upon completion of the work, the Contractor shall submit three full sized sets of the marked prints to the Contracting Officer for approval. If upon review, the as-built drawings are found to contain errors and/or omissions, they will be returned to the Contractor for correction. The Contractor shall correct and return the as-built drawings to the Contracting Officer for approval within ten calendar days from the time the drawings are returned to the Contractor.

SD-08 Statements

On-Site Test; GA|ED.

A detailed description of the Contractor's proposed procedures for on-site tests.

SD-09 Reports

Factory Test Reports; GA|ED.

Six copies of the information described below in 216 x 280 mm binders having a minimum of 5 rings from which material may readily be removed and replaced, including a separate section for each test. Sections shall be separated by heavy plastic dividers with tabs.

a. A list of equipment used, with calibration certifications.

b. A copy of measurements taken.

c. The dates of testing.

d. The equipment and values to be verified.

e. The conditions specified for the test.

f. The test results, signed and dated.

g. A description of adjustments made.

Field Test Plan; GA|ED.

A detailed description of the Contractor's proposed procedures for on-site test submitted 30 days prior to testing the installed system. No field test will be performed until the test plan is approved. The test plan shall consist of complete field test procedures including tests to be performed, test equipment required, and tolerance limits.

Field Test Reports; GA|ED.

Six copies of the information described below in 216 x 280 mm binders having a minimum of 5 rings from which material may readily be removed and replaced, including a separate section for each test. Sections shall be separated by heavy plastic dividers with tabs.

a. A list of equipment used, with calibration certifications.

b. A copy of measurements taken.

c. The dates of testing.

d. The equipment and values to be verified.

e. The conditions specified for the test.

f. The test results, signed and dated.

g. A description of adjustments made.

h. Final position of controls and device settings.

SD-13 Certificates

Materials and Equipment; GA|ED.

The label or listing of the Underwriters Laboratories, Inc., will be accepted as evidence that the materials or equipment conform to the applicable standards of that agency. In lieu of this label or listing, a statement from a nationally recognized, adequately equipped testing agency indicating that the items have been tested in accordance with required procedures and that the materials and equipment comply with all contract requirements will be accepted. However, materials and equipment installed in hazardous locations must bear the UL label unless the data submitted from other testing agency is specifically approved in writing by the Contracting Officer. Items which are required to be listed and labeled in accordance with Underwriters Laboratories must be affixed with a UL label that states that it is UL listed. No exceptions or waivers will be granted to this requirement. Materials and equipment will be approved based on the manufacturer's published data.

For other than equipment and materials specified to conform to UL publications, a manufacturer's statement indicating complete compliance with the applicable standard of the American Society for Testing and Materials, National Electrical Manufacturers Association, or other commercial standard, is acceptable.

1.4 WORKMANSHIP

Materials and equipment shall be installed in accordance with NFPA 70, recommendations of the manufacturer, and as shown.

PART 2 PRODUCTS

Products shall conform to the respective publications and other requirements specified below. Materials and equipment not listed below shall be as specified elsewhere in this section. Items of the same classification shall be identical including equipment, assemblies, parts, and components.

2.1 CABLES AND WIRES

Conductors No. 8 AWG and larger diameter shall be stranded. Conductors No. 10 AWG and smaller diameter shall be solid, except that conductors for remote control, alarm, and signal circuits, classes 1, 2, and 3, shall be stranded unless specifically indicated otherwise. Conductor sizes and ampacities shown are based on copper, unless indicated otherwise. Conductors indicated to be No. 6 AWG or smaller diameter shall be copper. Conductors indicated to be No. 4 AWG and larger diameter shall be either copper or aluminum, unless otherwise indicated or required by manufacturer.

2.1.1 Equipment Manufacturer Requirements

When manufacturer's equipment requires copper conductors at the terminations or requires copper conductors to be provided between components of equipment, provide copper conductors or splices, splice boxes, and other work required to meet manufacturer's requirements.

2.1.2 Aluminum Conductors

Aluminum conductors shall be AA-8000 series electrical grade aluminum alloy conductors. Type EC-1350 aluminum is unacceptable.

2.1.3 Insulation

Unless indicated otherwise, or required by NFPA 70, power and lighting wires shall be 600-volt, Type THWN, THHN, or THW conforming to UL 83 or RHW conforming to UL 44, except that grounding wire may be type TW conforming to UL 83; remote-control and signal circuits shall be Type TW, THW or TF, conforming to UL 83. Where lighting fixtures require 90-degree Centigrade (C) conductors, provide only conductors with 90-degree C insulation or better.

2.1.4 Bonding Conductors

ASTM B 1, solid bare copper wire for sizes No. 8 AWG and smaller diameter; ASTM B 8, Class B, stranded bare copper wire for sizes No. 6 AWG and larger diameter.

2.1.5 Service Entrance Cables

Service entrance (SE) and underground service entrance (USE) cables, UL 854.

2.1.6 Metal-Clad Cable

UL 1569; NFPA 70, Type MC cable.

2.1.7 Armored Cable

UL 4; NFPA 70, Type AC cable.

2.1.8 Mineral-Insulated, Metal-Sheathed Cable

UL listed NFPA 70, type MI cable. Sheathing containing asbestos fibers shall not be used.

2.1.9 Tray Cable or Power Limited Tray Cable

UL listed; Type TC or PLTC.

2.1.10 Cord Sets and Power-Supply Cords

UL 817.

2.2 CABLE TRAYS

NEMA VE 1 cable trays shall form a wireway system, and shall be of nominal 100 mm depth. Cable trays shall be constructed of aluminum or zinc-coated steel. Trays shall include splice and end plates, dropouts, and miscellaneous hardware. Edges, fittings, and hardware shall be finished free from burrs and sharp edges. Fittings shall have not less than the load-carrying ability of straight tray sections and shall have manufacturer's minimum standard radius. [Radius of bends shall be 305 mm.

2.2.1 Trough

Trough-type cable trays shall be of a nominal 150 mm width.

2.2.2 Ladder

Ladder-type cable trays shall be of nominal 150 mm width. Rung spacing shall be on 230 mm maximum centers.

2.2.3 Channel

Channel-type cable trays shall be [75] [100] mm width. Trays shall be one-piece construction having slots spaced not more than 110 mm on centers.

2.2.4 Cantilever

Cantilever-type, center-hung cable trays may be provided at the Contractor's option in lieu of other cable tray types specified.

2.3 TRANSIENT VOLTAGE SURGE PROTECTION

Transient voltage surge suppressors shall be provided as indicated. Surge suppressors shall meet the requirements of IEEE C62.41 and be UL listed and labeled as having been tested in accordance with UL 1449. Surge suppressor ratings shall be 120 or 277 volts rms as needed, operating voltage; 60 Hz; 1-phase or 3-phase; 3 wire with ground as required; transient suppression voltage (peak let-through voltage) of 400v for 120v and 800v for 277v. Fuses shall not be used as surge suppression.

2.4 CIRCUIT BREAKERS

2.4.1 MOLDED-CASE CIRCUIT BREAKERS

Molded-case circuit breakers shall conform to NEMA AB 1 and UL 489. Circuit breakers may be installed in panelboards, switchboards, enclosures,

motor control centers, or combination motor controllers.

2.4.1.1 Construction

Circuit breakers shall be suitable for mounting and operating in any position. Lug shall be listed for copper and aluminum conductors in accordance with UL 486E. Single-pole circuit breakers shall be full module size with not more than one pole per module. Multi-pole circuit breakers shall be of the common-trip type having a single operating handle such that an overload or short circuit on any one pole will result in all poles opening simultaneously. Sizes of 100 amperes or less may consist of single-pole breakers permanently factory assembled into a multi-pole unit having an internal, mechanical, nontamperable common-trip mechanism and external handle ties. All circuit breakers shall have a quick-make, quick-break overcenter toggle-type mechanism, and the handle mechanism shall be trip-free to prevent holding the contacts closed against a short-circuit or sustained overload. All circuit breaker handles shall assume a position between "ON" and "OFF" when tripped automatically. All ratings shall be clearly visible.

2.4.1.2 Ratings

Voltage ratings shall be not less than the applicable circuit voltage. The interrupting rating of the circuit breakers shall be at least equal to the available short-circuit current at the line terminals of the circuit breaker and correspond to the UL listed integrated short-circuit current rating specified for the panelboards and switchboards. Molded-case circuit breakers shall have nominal voltage ratings, maximum continuous-current ratings, and maximum short-circuit interrupting ratings in accordance with NEMA AB 1. Ratings shall be coordinated with system X/R ratio.

2.4.1.3 Cascade System Ratings

Circuit breakers used in series combinations shall be in accordance with UL 489. Equipment, such as switchboards and panelboards, which house series-connected circuit breakers shall be clearly marked accordingly. Series combinations shall be listed in the UL Recognized Component Directory under "Circuit Breakers-Series Connected."

2.4.1.4 Thermal-Magnetic Trip Elements

Thermal magnetic circuit breakers shall be provided as shown. Automatic operation shall be obtained by means of thermal-magnetic tripping devices located in each pole providing inverse time delay and instantaneous circuit protection. The instantaneous magnetic trip shall be adjustable and accessible from the front of all circuit breakers on frame sizes above 150 amperes.

2.4.2 SWD Circuit Breakers

Circuit breakers rated 15 amperes and intended to switch 277 volts or less fluorescent lighting loads shall be marked "SWD."

2.4.3 HACR Circuit Breakers

Circuit breakers 60 amperes or below, 240 volts, 1-pole or 2-pole, intended to protect multi-motor and combination-load installations involved in heating, air conditioning, and refrigerating equipment shall be marked "Listed HACR Type."

2.4.4 Ground Fault Circuit Interrupters

UL 943. Breakers equipped with ground fault circuit interrupters shall have ground fault class, interrupting capacity, and voltage and current ratings as indicated.

2.5 MOTOR SHORT-CIRCUIT PROTECTOR (MSCP)

Motor short-circuit protectors shall conform to UL 508 and shall be provided as shown. Protectors shall be used only as part of a combination motor controller which provides coordinated motor branch-circuit overload and short-circuit protection, and shall be rated in accordance with the requirements of NFPA 70.

2.5.1 Construction

Motor short-circuit protector bodies shall be constructed of high temperature, dimensionally stable, long life, nonhygroscopic materials. Protectors shall fit special MSCP mounting clips and shall not be interchangeable with any commercially available fuses. Protectors shall have 100 percent one-way interchangeability within the A-Y letter designations. All ratings shall be clearly visible.

2.5.2 Ratings

Voltage ratings shall be not less than the applicable circuit voltage. Letter designations shall be A through Y for motor controller Sizes 0, 1, 2, 3, 4, and 5, with 100,000 amperes interrupting capacity rating. Letter designations shall correspond to controller sizes as follows:

CONTROLLER SIZE	MSCP DESIGNATION
NEMA O	A-N
NEMA 1	A-P
NEMA 2	A-S
NEMA 3	A-U
NEMA 4	A-W
NEMA 5	A-Y

2.6 CONDUIT AND TUBING

2.6.1 Electrical, Zinc-Coated Steel Metallic Tubing (EMT)

UL 797

2.6.2 Electrical Nonmetallic Tubing (ENT)

NEMA TC 13.

2.6.3 Electrical Plastic Tubing and Conduit

NEMA TC 2.

2.6.4 Flexible Conduit, Steel and Plastic

General-purpose type, UL 1; liquid tight, UL 360, and UL 1660.

2.6.5 Intermediate Metal Conduit

UL 1242.

2.6.6 PVC Coated Rigid Steel Conduit

NEMA RN 1.

2.6.7 Rigid Aluminum Conduit

ANSI C80.5 and UL 6.

2.6.8 Rigid Metal Conduit

UL 6.

2.6.9 Rigid Plastic

NEMA TC 2, UL 651 and UL 651A.

2.6.10 Surface Metal Electrical Raceways and Fittings

UL 5.

2.7 CONDUIT AND DEVICE BOXES AND FITTINGS

2.7.1 Boxes, Metallic Outlet

NEMA OS 1 and UL 514C.

2.7.2 Boxes, Switch (Enclosed), Surface-Mounted

UL 98.

2.7.3 Fittings for Conduit and Outlet Boxes

UL 514B.

2.7.4 Fittings, PVC, for Use with Rigid PVC Conduit and Tubing

UL 514B.

2.8 CONDUIT COATINGS PLASTIC RESIN SYSTEM

NEMA RN 1, Type A-40.

2.9 CONNECTORS, WIRE PRESSURE

2.9.1 For Use With Copper Conductors

UL 486A.

2.9.2 For Use With Aluminum Conductors

UL 486B.

2.10 ELECTRICAL GROUNDING AND BONDING EQUIPMENT

UL 467.

2.10.1 Ground Rods

Ground rods shall be of copper-clad steel conforming to UL 467 not less than 19.1 mm in diameter by 3.1 meter in length of the sectional type driven full length into the earth.

2.10.2 Ground Bus

The ground bus shall be bare conductor or flat copper in one piece, if practicable.

2.11 ENCLOSURES

NEMA ICS 6 unless otherwise specified.

2.11.1 Cabinets and Boxes

Cabinets and boxes with volume greater than 0.0164 cubic meters shall be in accordance with UL 50, hot-dip, zinc-coated, if sheet steel.

2.11.2 Circuit Breaker Enclosures

UL 489.

2.12 FIXTURES, LIGHTING AND FIXTURE ACCESSORIES/COMPONENTS

Standard Drawing 40-06-04 sheets referenced hereinafter and enclosed as an integral part of these specifications, additional fixtures shown on contract drawings. Fixtures, accessories and components, including ballasts, lampholders, lamps, starters and starter holders, shall conform to industry standards specified below.

2.12.1 Fixture, Auxiliary or Emergency

UL 924.

2.12.2 Incandescent Fixture

NEMA LE 4 for ceiling compatibility of recessed fixtures and UL 1571.

2.12.3 Fluorescent

a. Fixture: NEMA LE 4 for ceiling compatibility of recessed fixtures and UL 1570. Fixtures shall be plainly marked for proper lamp and ballast type to identify lamp diameter, wattage, color and start type. Marking shall be readily visible to service personnel, but not visible from normal viewing angles.

b. Ballasts:

(1) Electronic Ballast. Electronic ballasts shall consist of a rectifier, high frequency inverter, and power control and regulation circuitry. The ballasts shall be UL listed, Class P,

with a Class A sound rating and shall contain no PCBs. Ballasts shall meet 47 CFR 18 for electromagnetic interference and shall not interfere with the operation of other electrical equipment. Design shall withstand line transients per IEEE C62.41, Category A. Unless otherwise indicated, the minimum number of ballasts shall be used to serve each individual fixture, using one, two, three or four lamp ballasts. A single ballast may be used to serve multiple fixtures if they are continuous mounted, factory manufactured for that installation with an integral wireway, and are identically controlled.

(a) Light output regulation shall be +/- 10%.

(b) Voltage input regulation shall be +/- 10%.

(c) Lamp current crest factor shall be no more than 1.6.

(d) Ballast factor shall be not less than 85% nor more than 100%, unless otherwise indicated.

(e) A 60 Hz filter shall be provided. Flicker shall be no more than 10% with any lamp suitable for the ballast.

(f) Ballast case temperature shall not exceed 25 degree Celsius rise above 40 degree Celsius ambient, when tested in accordance with UL 935.

(g) Total harmonic distortion shall be in the range of 10-20%.

(h) Power factor shall not be less than 0.95.

(i) Ballasts shall operate at a frequency of 20 kHz or more.

(j) Operating filament voltage shall be 2.5 to 4.5 volts.

(k) Warranty. Three year full warranty including a $10 labor allowance.

(l) Ballast Efficacy Factor (BEF) shall be in accordance with the following table. Ballasts and lamps shall be matching rapid start or instant start as indicated on the following table. If 32W-F32-T8 lamps and ballasts are used, they must be either all rapid start or all instant start.

ELECTRONIC FLUORESCENT BALLAST EFFICACY FACTORS*

LAMP TYPE	TYPE OF STARTER & LAMP	NOMINAL OPERATIONAL INPUT VOLTAGE	NUMBER OF LAMPS	MIN. BALLAST EFFICACY FACTOR
40W F40 T12	rapid start	120 or 277 V	1	2.3
			2	1.2
			3	0.8
			4	0.6
34W F40 T12	rapid start	120 or 277 V	1	2.6
			2	1.3
			3	1.0
			4	0.7

ELECTRONIC FLUORESCENT BALLAST EFFICACY FACTORS*

LAMP TYPE	TYPE OF STARTER & LAMP	NOMINAL OPERATIONAL INPUT VOLTAGE	NUMBER OF LAMPS	MIN. BALLAST EFFICACY FACTOR
40W F40 T10	rapid start	120 or 277 V	1	2.2
			2	1.1
			3	0.8
32W F32 T8	rapid or instant start	120 or 277 V	1	2.4
			2	1.4
			3	1.0
			4	0.8

*For ballasts not specifically designed for use with dimming controls

The BEF is calculated using the formula:

BEF = Ballast Factor (in percent) / Power Input

Where Power Input = Total Wattage of Combined Lamps and Ballasts.

c. Lampholders, Starters, and Starter Holders: UL 542.

2.12.4 High-Intensity-Discharge

a. Fixture: NEMA LE 4 for ceiling compatibility of recessed fixtures and UL 1572.

b. Ballasts: ANSI C82.4 for multiple supply types and UL 1029.

2.13 LOW-VOLTAGE FUSES AND FUSEHOLDERS

2.13.1 Fuses, Low Voltage Cartridge Type

NEMA FU 1.

2.13.2 Fuses, High-Interrupting-Capacity, Current-Limiting Type

Fuses, Class G, J, L and CC shall be in accordance with UL 198C.

2.13.3 Fuses, Class K, High-Interrupting-Capacity Type

UL 198D.

2.13.4 Fuses, Class H

UL 198B.

2.13.5 Fuses, Class R

UL 198E.

2.13.6 Fuses, Class T

UL 198H.

2.13.7 Fuses for Supplementary Overcurrent Protection

UL 198G.

2.13.8 Fuses, D-C for Industrial Use

UL 198L.

2.13.9 Fuseholders

UL 512.

2.14 INSTRUMENTS, ELECTRICAL INDICATING

ANSI C39.1.

2.15 MOTORS, AC, FRACTIONAL AND INTEGRAL

Motors, ac, fractional and integral kilowatt, 373.0 kW and smaller shall conform to NEMA MG 1 and UL 1004for motors; NEMA MG 10 for energy management selection of polyphase motors.

2.15.1 Rating

The kilowatt rating of motors should be limited to no more than 125 percent of the maximum load being served unless a NEMA standard size does not fall within this range. In this case, the next larger NEMA standard motor size should be used.

2.15.2 Motor Efficiencies

All permanently wired polyphase motors of 746 W or more shall meet the minimum full-load efficiencies as indicated in the following table, and as specified in this specification. Motors of 746 W or more with open, drip proof or totally enclosed fan cooled enclosures shall be high efficiency type, unless otherwise indicated. Motors provided as an integral part of motor driven equipment are excluded from this requirement if a minimum seasonal or overall efficiency requirement is indicated for that equipment by the provisions of another section.

Minimum Motor Efficiencies

kW	Std. Efficiency	High Efficiency
0.746	77.0	85.5
1.12	78.5	85.5
1.49	78.5	85.5
2.24	78.5	88.5
3.73	82.5	88.5
5.60	84.0	90.0
7.46	85.5	90.0
11.2	85.5	91.0
14.9	87.5	92.0
18.7	88.5	92.0
22.4	88.5	92.0
29.8	88.5	92.0
37.3	89.0	92.5

Minimum Motor Efficiencies

kW	Std. Efficiency	High Efficiency
44.8	89.0	92.5
56.9	89.0	95.5
74.6	90.0	93.5
93.3	91.0	94.5
112	91.0	94.5
149	91.0	94.5
187	91.0	94.5
224	91.0	94.5
261	91.0	94.5
298	91.0	94.5
373	91.0	94.5

2.16 MOTOR CONTROLS AND MOTOR CONTROL CENTERS

2.16.1 General

NEMA ICS 1, NEMA ICS 2, NEMA ICS 3 and NEMA ICS 6, and UL 508 and UL 845. Panelboards supplying non-linear loads shall have neutrals sized for 200 percent of rated current.

2.16.2 Motor Starters

Combination starters shall be provided with circuit breakers.

2.16.2.1 Reduced-Voltage Starters

Reduced-voltage starters shall be provided for polyphase motors 18.6 kW (25 hp) or larger. Reduced-voltage starters shall be of the single-step autotransformer, reactor, or resistor type having an adjustable time interval between application of reduced and full voltages to the motors. Wye-delta reduced voltage starter or part winding increment starter having an adjustable time delay between application of voltage to first and second winding of motor may be used in lieu of the reduced voltage starters specified above for starting of motor-generator sets, centrifugally operated equipment or reciprocating compressors provided with automatic unloaders.

2.16.3 Thermal-Overload Protection

Each motor of 93 W (1/8 hp) or larger shall be provided with thermal-overload protection. Polyphase motors shall have overload protection in each ungrounded conductor. The overload-protection device shall be provided either integral with the motor or controller, or shall be mounted in a separate enclosure. Unless otherwise specified, the protective device shall be of the manually reset type. Single or double pole tumbler switches specifically designed for alternating-current operation only may be used as manual controllers for single-phase motors having a current rating not in excess of 80 percent of the switch rating.

2.16.4 Low-Voltage Motor Overload Relays

2.16.4.1 General

Thermal and magnetic current overload relays shall conform to NEMA ICS 2

and UL 508. Overload protection shall be provided either integral with the motor or motor controller, and shall be rated in accordance with the requirements of NFPA 70. Standard units shall be used for motor starting times up to 7 seconds. Slow units shall be used for motor starting times from 8 to 12 seconds. Quick trip units shall be used on hermetically sealed, submersible pumps, and similar motors.

2.16.4.2 Construction

Manual reset type thermal relay shall be melting alloy or bimetallic construction. Automatic reset type thermal relays shall be bimetallic construction. Magnetic current relays shall consist of a contact mechanism and a dash pot mounted on a common frame.

2.16.4.3 Ratings

Voltage ratings shall be not less than the applicable circuit voltage. Trip current ratings shall be established by selection of the replaceable overload device and shall not be adjustable. Where the controller is remotely-located or difficult to reach, an automatic reset, non-compensated overload relay shall be provided. Manual reset overload relays shall be provided otherwise, and at all locations where automatic starting is provided. Where the motor is located in a constant ambient temperature, and the thermal device is located in an ambient temperature that regularly varies by more than minus 10 degrees C, an ambient temperature-compensated overload relay shall be provided.

2.16.5 Automatic Control Devices

2.16.5.1 Direct Control

Automatic control devices (such as thermostats, float or pressure switches) which control the starting and stopping of motors directly shall be designed for that purpose and have an adequate kilowatt rating.

2.16.5.2 Pilot-Relay Control

Where the automatic-control device does not have such a rating, a magnetic starter shall be used, with the automatic-control device actuating the pilot-control circuit.

2.16.5.3 Manual/Automatic Selection

a. Where combination manual and automatic control is specified and the automatic-control device operates the motor directly, a double-throw, three-position tumbler or rotary switch (marked MANUAL-OFF-AUTOMATIC) shall be provided for the manual control.

b. Where combination manual and automatic control is specified and the automatic-control device actuates the pilot control circuit of a magnetic starter, the magnetic starter shall be provided with a three-position selector switch marked MANUAL-OFF-AUTOMATIC.

c. Connections to the selector switch shall be such that; only the normal automatic regulatory control devices will be bypassed when the switch is in the Manual position; all safety control devices, such as low-or high-pressure cutouts, high-temperature cutouts, and motor-overload protective devices, shall be connected in the motor-control circuit in both the Manual and the Automatic

positions of the selector switch. Control circuit connections to any MANUAL-OFF-AUTOMATIC switch or to more than one automatic regulatory control device shall be made in accordance with wiring diagram approved by the Contracting Officer unless such diagram is included on the drawings. All controls shall be 120 volts or less unless otherwise indicated.

2.16.6 Motor Control Centers

Control centers shall conform to the requirements of NEMA ICS 2, and UL 508 and UL 845. Control centers shall be indoor type and shall contain combination starters and other equipment as indicated. Control centers shall be NEMA ICS 2, Class II, Type B. Each control center shall be mounted on floor sills or mounting channels. Each circuit shall have a suitable metal or laminated plastic nameplate with white cut letters. Motor control centers shall be provided with a full-length ground bus bar.

2.17 PANELBOARDS

Dead-front construction, NEMA PB 1 and UL 67.

2.18 RECEPTACLES

2.18.1 Hospital Grade

UL 498.

2.18.2 Heavy Duty Grade

NEMA WD 1. Devices shall conform to all requirements for heavy duty receptacles.

2.18.3 Standard Grade

UL 498.

2.18.4 Ground Fault Interrupters

UL 943, Class A or B.

2.18.5 NEMA Standard Receptacle Configurations

NEMA WD 6.

a. Single and Duplex, 20-Ampere, 125 Volt

15-ampere, non-locking: NEMA type 5-15R, locking: NEMA type L5-15R, 20-ampere, non-locking: NEMA type 5-20R, locking: NEMA type L5-20R.

b. 15-Ampere, 250 Volt

Two-pole, 3-wire grounding, non-locking: NEMA type 6-15R, locking: NEMA type L6-15R. Three-pole, 4-wire grounding, non-locking: NEMA type 15-15R, locking: NEMA type L15-15R.

c. 20-Ampere, 250 Volt

Two-pole, 3-wire grounding, non-locking: NEMA type 6-20R, locking: NEMA type L6-20R. Three-pole, 4-wire grounding, non-locking: NEMA type 15-20R,

locking: NEMA type L15-20R.

d. 30-Ampere, 125/250 Volt

Three-pole, 3-wire, non-locking: NEMA type 10-30R, locking: NEMA type L10-30R. Three-pole, 4-wire grounding, non-locking: NEMA type 14-30R, locking: NEMA type L14-30R.

e. 30-Ampere, 250 Volt

Two-pole, 3-wire grounding, non-locking: NEMA type 6-30R, locking: NEMA type L6-30R. Three-pole, 4-wire grounding, non-locking: NEMA type 15-30R, locking: NEMA type L15-30R.

f. 50-Ampere, 125/250 Volt

Three-pole, 3-wire: NEMA type 10-50R. Three-pole, 4-wire grounding: NEMA type 14-50R.

g. 50-Ampere, 250 Volt

Two-pole, 3-wire grounding: NEMA type 6-50R. Three-pole, 4-wire grounding: NEMA type 15-50R.

2.19 Service Entrance Equipment

UL 869A.

2.20 SPLICE, CONDUCTOR

UL 486C.

2.21 POWER-SWITCHGEAR ASSEMBLIES INCLUDING SWITCHBOARDS

Assemblies shall be metal-enclosed, freestanding general-purpose type in accordance with NEMA PB 2, UL 891, and IEEE C37.20.1 and shall be installed to provide front and rear access. Busses shall be copper. Assembly shall be approximately 2.3 meters high; arrangement of circuit breakers and other items specified shall be as indicated. The withstand rating and interrupting capacity of the switchboards and circuit breakers, fuses shall be based on the maximum fault current available.

2.21.1 Circuit Breakers

Circuit breakers shall be drawout molded-case circuit breakers insulated-case, systems type circuit breakers.

2.22 SNAP SWITCHES

UL 20.

2.23 TAPES

2.23.1 Plastic Tape

UL 510.

2.23.2 Rubber Tape

UL 510.

2.24 TRANSFORMERS

Single- and three-phase transformers shall have two windings per phase. Full-capacity standard NEMA taps shall be provided in the primary windings of transformers unless otherwise indicated. Three-phase transformers shall be configured with delta-wye windings, except as indicated. "T" connections may be used for transformers rated 15 kVA or below. Transformers supplying non-linear loads shall be UL listed as suitable for supplying such loads with a total K-factor not to exceed K-13 and have neutrals sized for 200 percent of rated current.

2.24.1 Transformers, Dry-Type

Transformers shall have 220 degrees C insulation system for transformers 15 kVA and greater, and shall have 180 degrees C insulation system for transformers rated 10 kVA and less, with temperature rise not exceeding 80 degrees C under full-rated load in maximum ambient temperature of 40 degrees C. Transformer of 80 degrees C temperature rise shall be capable of carrying continuously 130 percent of nameplate kVA without exceeding insulation rating.

a. 600 Volt or Less Primary:

NEMA ST 20, UL 506, general purpose, dry-type, self-cooled, ventilated. Provide transformers in NEMA 1 enclosure.

2.24.2 Average Sound Level

The average sound level in decibels (dB) of transformers shall not exceed the following dB level at 300 mm for the applicable kVA rating range listed unless otherwise indicated:

kVA Range	dB Sound Level
1-50	50
51-150	55
151-300	58
301-500	60
501-700	62
701-1000	64
1001-1500	65
1501 & above	70

2.25 ISOLATED POWER SYSTEM EQUIPMENT

UL 1047, with monitor UL 1022.

2.26 WIRING DEVICES

NEMA WD 1 for wiring devices, and NEMA WD 6 for dimensional requirements of wiring devices.

2.27 Liquid-Dielectrics

Liquid dielectrics for transformers, capacitors, and other liquid-filled electrical equipment shall be non-polychlorinated biphenyl (PCB) mineral oil or less flammable liquid as specified. Nonflammable fluids shall not

be used. Tetrachloroethylene (perchloroethylene) and 1, 2, 4 trichlorobenzene fluids shall be certified by the manufacturer as having less than 2 parts per million (ppm) PCB content. In lieu of the manufacturer's certification, the Contractor may submit a test sample of the dielectric in accordance with ASTM D 4059 at a testing facility approved by the Contracting Officer. Equipment with test results indicating PCB level exceeding 2 ppm shall be replaced.

PART 3 EXECUTION

3.1 GROUNDING

Grounding shall be in conformance with NFPA 70, the contract drawings, and the following specifications.

3.1.1 Ground Rods

The resistance to ground shall be measured using the fall-of-potential method described in IEEE Std 81. The maximum resistance of a driven ground shall not exceed 25 ohms under normally dry conditions. If this resistance cannot be obtained with a single rod, 2 additional rods not less than 1.8 meters on centers, or if sectional type rods are used, 2 additional sections may be coupled and driven with the first rod. In high-ground-resistance, UL listed chemically charged ground rods may be used. If the resultant resistance exceeds 25 ohms measured not less than 48 hours after rainfall, the Contracting Officer shall be notified immediately. Connections below grade shall be fusion welded. Connections above grade shall be fusion welded or shall use UL 467 approved connectors.

3.1.2 Ground Bus

Ground bus shall be provided in the computerroom as indicated. Noncurrent-carrying metal parts of transformer neutrals and other electrical equipment shall be effectively grounded. The ground bus shall be as shown on the drawings. Connections and splices shall be of the brazed, welded, bolted, or pressure-connector type, except that pressure connectors or bolted connections shall be used for connections to removable equipment. For raised floor equipment rooms in computer and data processing centers, a minimum of 4, one at each corner, multiple grounding systems shall be furnished. Connections shall be bolted type in lieu of thermoweld, so they can be changed as required by additions and/or alterations.

3.1.3 Grounding Conductors

Equipment grounding bars shall be provided in all panelboards. Insulated grouning bar in all 120/208v panelboards. The equipment grounding conductor shall be carried back to the service entrance grounding connection or separately derived grounding connection. All equipment grounding conductors, including metallic raceway systems used as such, shall be bonded or joined together in each wiring box or equipment enclosure. Metallic raceways and grounding conductors shall be checked to assure that they are wired or bonded into a common junction. Metallic boxes and enclosures, if used, shall also be bonded to these grounding conductors by an approved means per NFPA 70.

3.2 WIRING METHODS

Wiring shall conform to NFPA 70, the contract drawings, and the following specifications. Unless otherwise indicated, wiring shall consist of

insulated conductors installed in rigid aluminum conduit rigid zinc-coated steel conduit electrical metallic tubing intermediate metal conduit . Where cables and wires are installed in cable trays, they shall be of the type permitted by NFPA 70 for use in such applications. Metallic-armored cables may be installed in areas permitted by NFPA 70. Wire fill in conduits shall be based on NFPA 70 for the type of conduit and wire insulations specified.

3.2.1 Conduit and Tubing Systems

Conduit and tubing systems shall be installed as indicated. Conduit sizes shown are based on use of copper conductors with insulation types as described in paragraph WIRING METHODS. Minimum size of raceways shall be 15 mm. Only metal conduits will be permitted when conduits are required for shielding or other special purposes indicated, or when required by conformance to NFPA 70. Nonmetallic conduit and tubing may be used in damp, wet or corrosive locations when permitted by NFPA 70 and the conduit or tubing system is provided with appropriate boxes, covers, clamps, screws or other appropriate type of fittings. Electrical metallic tubing (EMT) may be installed only within buildings. EMT may be installed in concrete and grout in dry locations. EMT installed in concrete or grout shall be provided with concrete tight fittings. EMT shall not be installed in damp or wet locations, or the air space of exterior masonry cavity walls. Bushings, manufactured fittings or boxes providing equivalent means of protection shall be installed on the ends of all conduits and shall be of the insulating type, where required by NFPA 70. Only UL listed adapters shall be used to connect EMT to rigid metal conduit, cast boxes, and conduit bodies. Aluminum conduit may be used only where installed exposed in dry locations. Nonaluminum sleeves shall be used where aluminum conduit passes through concrete floors and firewalls. Penetrations of above grade floor slabs, time-rated partitions and fire walls shall be firestopped in accordance with Section 07270 FIRESTOPPING. Except as otherwise specified, IMC may be used as an option for rigid steel conduit in areas as permitted by NFPA 70. Raceways shall not be installed under the firepits of boilers and furnaces and shall be kept 150 mm away from parallel runs of flues, steam pipes and hot-water pipes. Raceways shall be concealed within finished walls, ceilings, and floors unless otherwise shown. Raceways crossing structural expansion joints or seismic joints shall be provided with suitable expansion fittings or other suitable means to compensate for the building expansion and contraction and to provide for continuity of grounding. Wiring installed in underfloor raceway system shall be suitable for installation in wet locations.

3.2.1.1 Pull Wires

A pull wire shall be inserted in each empty raceway in which wiring is to be installed if the raceway is more than 15 meters in length and contains more than the equivalent of two 90-degree bends, or where the raceway is more than 45 meters in length. The pull wire shall be of No. 14 AWG zinc-coated steel, or of plastic having not less than 1.4 MPa (200 psi) tensile strength. Not less than 254 mm of slack shall be left at each end of the pull wire.

3.2.1.2 Conduit Stub-Ups

Where conduits are to be stubbed up through concrete floors, a short elbow shall be installed below grade to transition from the horizontal run of conduit to a vertical run. A conduit coupling fitting, threaded on the inside shall be installed, to allow terminating the conduit flush with the

finished floor. Wiring shall be extended in rigid threaded conduit to equipment, except that where required, flexible conduit may be used 150 mm above the floor. Empty or spare conduit stub-ups shall be plugged flush with the finished floor with a threaded, recessed plug.

3.2.1.3 Below Slab-on-Grade or in the Ground

Electrical wiring below slab-on-grade shall be protected by a conduit system. Conduit passing vertically through slabs-on-grade shall be rigid steel or IMC. Rigid steel or IMC conduits installed below slab-on-grade or in the earth shall be field wrapped with 0.254 mm thick pipe-wrapping plastic tape applied with a 50 percent overlay, or shall have a factory-applied polyvinyl chloride, plastic resin, or epoxy coating system.

3.2.1.4 Installing in Slabs Including Slabs on Grade

Conduit installed in slabs-on-grade shall be rigid steel or IMC. Conduits shall be installed as close to the middle of concrete slabs as practicable without disturbing the reinforcement. Outside diameter shall not exceed 1/3 of the slab thickness and conduits shall be spaced not closer than 3 diameters on centers except at cabinet locations where the slab thickness shall be increased as approved by the Contracting Officer. Where conduit is run parallel to reinforcing steel, the conduit shall be spaced a minimum of one conduit diameter away but not less than 25.4 mm from the reinforcing steel.

3.2.1.5 Changes in Direction of Runs

Changes in direction of runs shall be made with symmetrical bends or cast-metal fittings. Field-made bends and offsets shall be made with an approved hickey or conduit-bending machine. Crushed or deformed raceways shall not be installed. Trapped raceways in damp and wet locations shall be avoided where possible. Care shall be taken to prevent the lodgment of plaster, dirt, or trash in raceways, boxes, fittings and equipment during the course of construction. Clogged raceways shall be cleared of obstructions or shall be replaced.

3.2.1.6 Supports

Except where otherwise permitted by NFPA 70, conduits and tubing shall be securely and rigidly fastened in place at intervals of not more than 3 meters and within 900 mm of boxes, cabinets, and fittings, with approved pipe straps, wall brackets, conduit clamps, conduit hangers, threaded C-clamps, beam clamps, or ceiling trapeze. Loads and supports shall be coordinated with supporting structure to prevent damage or deformation to the structure. Loads shall not be applied to joist bridging. Attachment shall be by wood screws or screw-type nails to wood; by toggle bolts on hollow masonry units; by expansion bolts on concrete or brick; by machine screws, welded threaded studs, heat-treated or spring-steel-tension clamps on steel work. Nail-type nylon anchors or threaded studs driven in by a powder charge and provided with lock washers and nuts may be used in lieu of expansion bolts or machine screws. Raceways or pipe straps shall not be welded to steel structures. Cutting the main reinforcing bars in reinforced concrete beams or joists shall be avoided when drilling holes for support anchors. Holes drilled for support anchors, but not used, shall be filled. In partitions of light steel construction, sheet-metal screws may be used. Raceways shall not be supported using wire or nylon ties. Raceways shall be independently supported from the structure. Upper raceways shall not be used as a means of support for lower raceways.

Supporting means will not be shared between electrical raceways and mechanical piping or ducts. Cables and raceways shall not be supported by ceiling grids. Except where permitted by NFPA 70, wiring shall not be supported by ceiling support systems. Conduits shall be fastened to sheet-metal boxes and cabinets with two locknuts where required by NFPA 70, where insulating bushings are used, and where bushings cannot be brought into firm contact with the box; otherwise, a single locknut and bushing may be used. Threadless fittings for electrical metallic tubing shall be of a type approved for the conditions encountered. Additional support for horizontal runs is not required when EMT rests on steel stud cutouts.

3.2.1.7 Exposed Raceways

Exposed raceways shall be installed parallel or perpendicular to walls, structural members, or intersections of vertical planes and ceilings. Raceways under raised floors and above accessible ceilings shall be considered as exposed installations in accordance with NFPA 70definitions.

3.2.1.8 Exposed Risers

Exposed risers in wire shafts of multistory buildings shall be supported by U-clamp hangers at each floor level, and at intervals not to exceed 3 meters.

3.2.1.9 Communications Raceways

Communications raceways indicated shall be installed in accordance with the previous requirements for conduit and tubing and with the additional requirements that no length of run shall exceed 15 meters for 15 mm and 20 mm sizes, and 30 meters for 25 mm or larger sizes, and shall not contain more than two 90-degrees bends or the equivalent. Additional pull or junction boxes shall be installed to comply with these limitations whether or not indicated. Inside radii of bends in conduits of 25 mm (1 inch) size or larger shall not be less than ten times the nominal diameter.

3.2.2 Cable Trays

Cable trays shall be supported in accordance with the recommendations of the manufacturer but at no more than 1.8 meter intervals. Contact surfaces of aluminum connections shall be coated with an antioxidant compound prior to assembly. Adjacent cable tray sections shall be bonded together by connector plates of an identical type as the cable tray sections. The Contractor shall submit the manufacturer's certification that the cable tray system meets all requirements of Article 318 of NFPA 70. The cable tray shall be installed and grounded in accordance with the provisions of Article 318 of NFPA 70. Data submitted by the Contractor shall demonstrate that the completed cable tray systems will comply with the specified requirements. Cable trays shall terminate 250 mm from both sides of smoke and fire partitions. Conductors run through smoke and fire partitions shall be installed in 103 mm (4 inch) rigid steel conduits with grounding bushings, extending 300 mm beyond each side of the partitions. The installation shall be sealed to preserve the smoke and fire rating of the partitions. Penetrations shall be firestopped in accordance with Section 07270 FIRESTOPPING.

3.2.3 Cables and Conductors

Installation shall conform to the requirements of NFPA 70. Covered, bare or insulated conductors of circuits rated over 600 volts shall not occupy

the same equipment wiring enclosure, cable, or raceway with conductors of circuits rated 600 volts or less.

3.2.3.1 Sizing

Unless otherwise noted, all sizes are based on copper conductors and the insulation types indicated. Sizes shall be not less than indicated. Branch-circuit conductors shall be not smaller than No. 12 AWG. Conductors for branch circuits of 120 volts more than 30 meters long and of 277 volts more than 70 meters long, from panel to load center, shall be no smaller than No. 10 AWG. Class 1 remote control and signal circuit conductors shall be not less than No. 14 AWG. Class 2 remote control and signal circuit conductors shall be not less than No. 16 AWG. Class 3 low-energy, remote-control and signal circuits shall be not less than No. 22 AWG.

3.2.3.2 Use of Aluminum Conductors in Lieu of Copper

Unless otherwise indicated, the Contractor may substitute aluminum conductors in lieu of copper conductors for copper sizes No. 4 AWG and larger. Should the Contractor choose to provide aluminum for conductors, the Contractor shall be responsible for increasing conductor size to have same ampacity as copper size indicated; increasing conduit and pull box sizes to accommodate larger size aluminum conductors in accordance with NFPA 70; ensuring that pulling tension rating of aluminum conductors is sufficient; providing panelboards and motor control centers that are UL listed for use with aluminum, and so labelled; relocating equipment, modifying equipment terminations, resizing equipment; and resolving problems that are a direct result of providing aluminum conductors in lieu of copper.

3.2.3.3 Cable Systems

Cable systems shall be installed where indicated. Cables shall be installed concealed behind ceiling or wall finish where practicable. Cables shall be threaded through holes bored on the approximate centerline of wood members; notching of surfaces will not be permitted. Sleeves shall be provided through bond beams of masonry-block walls for threading cables through hollow spaces. Exposed cables shall be installed parallel or at right angles to walls or structural members. In rooms or areas not provided with ceiling or wall finish, cables and outlets shall be installed so that a room finish may be applied in the future without disturbing the cables or resetting the boxes. Exposed nonmetallic-sheathed cables less than 1.2 meters above floors shall be protected from mechanical injury by installation in conduit or tubing.

3.2.3.4 Mineral-Insulated Cable

Mineral-insulated, metal-sheathed cable system, Type MI, may be used in lieu of exposed conduit and wiring. Conductor sizes shall be not less than those indicated for the conduit installation. Cables shall be fastened within 300 mm of each turn or offset and at intervals of not more than 1.8 meters. Cable terminations shall be made in accordance with manufacturer's recommendations.

3.2.3.5 Cable Splicing

Splices shall be made in an accessible location. Crimping tools and dies shall be approved by the connector manufacturer for use with the type of connector and conductor.

a. Copper Conductors, 600 Volt and Under: Splices in conductors No. 10 AWG and smaller diameter shall be made with an insulated, pressure-type connector. Splices in conductors No. 8 AWG and larger diameter shall be made with a solderless connector and insulated with tape or heat-shrink type insulating material equivalent to the conductor insulation.

b. Aluminum Conductors, 600 Volt and Under: Splices of aluminum conductors shall be made with a UL listed, solderless, compression-type, aluminum bodied connector, stamped for AL or AL/CU. Aluminum contact surfaces of conductors shall be cleaned with a wire brush and covered with anti-oxidant joint compound prior to making of connections. Any excess joint compound shall be wiped away after installing the connector. Insulate the connection with tape or heat-shrink type insulating material equivalent to the conductor insulation.

c. Greater Than 600 Volt: Cable splices shall be made in accordance with the cable manufacturer's recommendations and Section 16375 ELECTRICAL DISTRIBUTION SYSTEM, UNDERGROUND.

3.2.3.6 Conductor Identification and Tagging

Power, control, and signal circuit conductor identification shall be provided within each enclosure where a tap, splice, or termination is made. Where several feeders pass through a common pull box, the feeders shall be tagged to indicate clearly the electrical characteristics, circuit number, and panel designation. Phase conductors of low voltage power circuits shall be identified by color coding. Phase identification by a particular color shall be maintained continuously for the length of a circuit, including junctions.

a. Color coding shall be provided for service, feeder, branch, and ground conductors. Color shall be green for grounding conductors and white for neutrals; except where neutrals of more than one system are installed in the same raceway or box, other neutral shall be white with colored (not green) stripe. The color coding for three-phase and single-phase low voltage systems shall be as follows:

120/208-volt, 3-phase: Black(A), red(B), and blue(C).
277/480-volt, 3-phase: Brown(A), orange(B), and yellow(C).
120/240-volt, 1-phase: Black and red.

b. Conductor phase and voltage identification shall be made by color-coded insulation for all conductors smaller than No. 6 AWG. For conductors No. 6 AWG and larger, identification shall be made by color-coded insulation, or conductors with black insulation may be furnished and identified by the use of half-lapped bands of colored electrical tape wrapped around the insulation for a minimum of 75 mm of length near the end, or other method as submitted by the Contractor and approved by the Contracting Officer.

c. Control and signal circuit conductor identification shall be made by color-coded insulated conductors, plastic-coated self-sticking printed markers, permanently attached stamped metal foil markers, or equivalent means as approved. Control circuit terminals of

equipment shall be properly identified. Terminal and conductor identification shall match that shown on approved detail drawings. Hand lettering or marking is not acceptable.

3.3 BOXES AND SUPPORTS

Boxes shall be provided in the wiring or raceway systems where required by NFPA 70 for pulling of wires, making connections, and mounting of devices or fixtures. Pull boxes shall be furnished with screw-fastened covers. Indicated elevations are approximate, except where minimum mounting heights for hazardous areas are required by NFPA 70. Unless otherwise indicated, boxes for wall switches shall be mounted 1.2 meters above finished floors. Switch and outlet boxes located on opposite sides of fire rated walls shall be separated by a minimum horizontal distance of 600 mm. The total combined area of all box openings in fire rated walls shall not exceed 0.0645 square meters per 9.3 square meters. Maximum box areas for individual boxes in fire rated walls vary with the manufacturer and must not exceed the maximum specified for that box in UL-03. Only boxes listed in UL-03 shall be used in fire rated walls.

3.3.1 Box Applications

Each box shall have not less than the volume required by NFPA 70 for number of conductors enclosed in box. Boxes for metallic raceways, 102 by 102 mm nominal size and smaller, shall be of the cast-metal hub type when located in normally wet locations, when flush and surface mounted on outside of exterior surfaces, or when located in hazardous areas. Cast-metal boxes installed in wet locations and boxes installed flush with the outside of exterior surfaces shall be gasketed. Boxes for mounting lighting fixtures shall be not less than 102 mm square, or octagonal, except smaller boxes may be installed as required by fixture configuration, as approved. Cast-metal boxes with 2.4 mm wall thickness are acceptable. Large size boxes shall be NEMA 1 or as shown. Boxes in other locations shall be sheet steel except that aluminum boxes may be used with aluminum conduit, and nonmetallic boxes may be used with nonmetallic conduit and tubing or nonmetallic sheathed cable system, when permitted by NFPA 70. Boxes for use in masonry-block or tile walls shall be square-cornered, tile-type, or standard boxes having square-cornered, tile-type covers.

3.3.2 Brackets and Fasteners

Boxes and supports shall be fastened to wood with wood screws or screw-type nails of equal holding strength, with bolts and metal expansion shields on concrete or brick, with toggle bolts on hollow masonry units, and with machine screw or welded studs on steel work. Threaded studs driven in by powder charge and provided with lockwashers and nuts, or nail-type nylon anchors may be used in lieu of expansion shields, or machine screws. Penetration of more than 38.1 mm (1-1/2 inches) into reinforced-concrete beams or more than 19.1 mm (3/4 inch) into reinforced-concrete joists shall avoid cutting any main reinforcing steel. The use of brackets which depend on gypsum wallboard or plasterboard for primary support will not be permitted. In partitions of light steel construction, bar hangers with 25 mm long studs, mounted between metal wall studs or metal box mounting brackets shall be used to secure boxes to the building structure. When metal box mounting brackets are used, additional box support shall be provided on the side of the box opposite the brackets. This additional box support shall consist of a minimum 300 mm long section of wall stud, bracketed to the opposite side of the box and secured by two screws through the wallboard on each side of the stud. Metal screws may be used in lieu

of the metal box mounting brackets.

3.3.3 Mounting in Walls, Ceilings, or Recessed Locations

In walls or ceilings of concrete, tile, or other non-combustible material, boxes shall be installed so that the edge of the box is not recessed more than 6 mm from the finished surface. Boxes mounted in combustible walls or ceiling material shall be mounted flush with the finished surface. The use of gypsum or plasterboard as a means of supporting boxes will not be permitted. Boxes installed for concealed wiring shall be provided with suitable extension rings or plaster covers, as required. The bottom of boxes installed in masonry-block walls for concealed wiring shall be mounted flush with the top of a block to minimize cutting of the blocks, and boxes shall be located horizontally to avoid cutting webs of block. Separate boxes shall be provided for flush or recessed fixtures when required by the fixture terminal operating temperature, and fixtures shall be readily removable for access to the boxes unless ceiling access panels are provided.

3.3.4 Installation in Overhead Spaces

In open overhead spaces, cast-metal boxes threaded to raceways need not be separately supported except where used for fixture support; cast-metal boxes having threadless connectors and sheet metal boxes shall be supported directly from the building structure or by bar hangers. Hangers shall not be fastened to or supported from joist bridging. Where bar hangers are used, the bar shall be attached to raceways on opposite sides of the box and the raceway shall be supported with an approved type fastener not more than 600 mm from the box.

3.4 DEVICE PLATES

One-piece type device plates shall be provided for all outlets and fittings. Plates on unfinished walls and on fittings shall be of zinc-coated sheet steel, cast-metal, or impact resistant plastic having rounded or beveled edges. Plates on finished walls shall be of steel with baked enamel finish or impact-resistant plastic and shall be ivory. Screws shall be of metal with countersunk heads, in a color to match the finish of the plate. Plates shall be installed with all four edges in continuous contact with finished wall surfaces without the use of mats or similar devices. Plaster fillings will not be permitted. Plates shall be installed with an alignment tolerance of 1.6 mm. The use of sectional-type device plates will not be permitted. Plates installed in wet locations shall be gasketed and provided with a hinged, gasketed cover, unless otherwise specified.

3.5 RECEPTACLES

3.5.1 Single and Duplex, 20-ampere, 125 volt

Single and duplex receptacles shall be rated 20 amperes, 125 volts, two-pole, three-wire, grounding type with polarized parallel slots. Bodies shall be of ivory to match color of switch handles in the same room or to harmonize with the color of the respective wall, and supported by mounting strap having plaster ears. Contact arrangement shall be such that contact is made on two sides of an inserted blade. Receptacle shall be side- or back-wired with two screws per terminal. The third grounding pole shall be connected to the metal mounting yoke. Switched receptacles shall be the same as other receptacles specified except that the ungrounded pole of each

suitable receptacle shall be provided with a separate terminal. Only the top receptacle of a duplex receptacle shall be wired for switching application. Receptacles with ground fault circuit interrupters shall have the current rating as indicated, and shall be UL Class A type unless otherwise shown. Ground fault circuit protection shall be provided as required by NFPA 70 and as indicated on the drawings.

3.5.2 Weatherproof Applications

Weatherproof receptacles shall be suitable for the environment, damp or wet as applicable, and the housings shall be labeled to identify the allowable use. Receptacles shall be marked in accordance with UL 514A for the type of use indicated; "Damp locations", "Wet Locations", "Wet Location Only When Cover Closed". Assemblies shall be installed in accordance with the manufacturer's recommendations.

3.5.2.1 Damp Locations

Receptacles in damp locations shall be mounted in an outlet box with a gasketed, weatherproof, cast-metal cover plate (device plate, box cover) and a gasketed cap (hood, receptacle cover) over each receptacle opening. The cap shall be either a screw-on type permanently attached to the cover plate by a short length of bead chain or shall be a flap type attached to the cover with a spring loaded hinge.

3.5.2.2 Wet Locations

Receptacles in wet locations shall be installed in an assembly rated for such use whether the plug is inserted or withdrawn, unless otherwise indicated. In a duplex installation, the receptacle cover shall be configured to shield the connections whether one or both receptacles are in use.

3.5.3 Receptacles, 15-Ampere, 250-Volt

Receptacles, 15-ampere, 250-volt, shall be single two-pole, three-wire, grounding type with bodies of ivory phenolic compound supported by mounting yoke having plaster ears. The third grounding pole shall be connected to the metal yoke. Each receptacle shall be provided with a mating cord-grip plug.

3.5.4 Receptacles, 20-Ampere, 250-Volt

Receptacles, single, 20-ampere, 250-volt, shall be ivory molded plastic, two-pole, three-wire or three-pole, four-wire, grounding type complete with appropriate mating cord-grip plug.

3.5.5 Receptacles, 30-Ampere, 125/250-Volt

Receptacles, single, 30-ampere, 125/250-volt, shall be molded-plastic, three-pole, four-wire, grounding type, complete with appropriate mating cord-grip type attachment plug.

3.5.6 Receptacles, 30-Ampere, 250-Volt

Receptacles, single, 30-ampere, 250-volt, shall be molded-plastic, three-pole, three-wire type, complete with appropriate mating cord-grip plug.

3.5.7 Receptacles, 50-Ampere, 125/250-Volt

Receptacles, single 50-ampere, 125/250-volt, shall be flush, molded plastic, three-pole, four-wire, grounding type.

3.5.8 Receptacles, 50-Ampere, 250-Volt

Receptacles, single, 50-ampere, 250-volt, shall be flush molded plastic, three-pole, three-wire type, complete with appropriate mating cord-grip plug.

3.5.9 Special-Purpose or Heavy-Duty Receptacles

Special-purpose or heavy-duty receptacles shall be of the type and of ratings and number of poles indicated or required for the anticipated purpose. Contact surfaces may be either round or rectangular. One appropriate straight or angle-type plug shall be furnished with each receptacle. Locking type receptacles, rated 30 amperes or less, shall be locked by rotating the plug. Locking type receptacles, rated more than 50 amperes, shall utilize a locking ring.

3.6 WALL SWITCHES

Wall switches shall be of the totally enclosed tumbler type. The wall switch handle and switch plate color shall be ivory. Wiring terminals shall be of the screw type or of the solderless pressure type having suitable conductor-release arrangement. Not more than two switches shall be installed in a single-gang position. Switches shall be rated 20-ampere 277-volt for use on alternating current only. Pilot lights indicated shall consist of yoke-mounted candelabra-base sockets rated at 75 watts, 125 volts, and fitted with glass or plastic jewels. A clear 6-watt lamp shall be furnished and installed in each pilot switch. Jewels for use with switches controlling motors shall be green, and jewels for other purposes shall be red. Dimming switches shall be solid-state flush mounted, sized for the loads.

3.7 SERVICE EQUIPMENT

Service-disconnecting means shall be of the enclosed molded-case circuit breaker type, type indicated in paragraph POWER SWITCHGEAR ASSEMBLIES INCLUDING SWITCHBOARDS with an external handle for manual operation. When service disconnecting means is a part of an assembly, the assembly shall be listed as suitable for service entrance equipment. Enclosures shall be sheet metal with hinged cover for surface mounting unless otherwise indicated.

3.8 PANELBOARDS AND LOADCENTERS

Circuit breakers and switches used as a motor disconnecting means shall be capable of being locked in the open position. Door locks shall be keyed alike. Nameplates shall be as approved. Directories shall be typed to indicate loads served by each circuit and mounted in a holder behind a clear protective covering. Busses shall be copper.

3.8.1 Loadcenters

Loadcenters shall be circuit breaker equipped.

3.8.2 Panelboards

Panelboards shall be circuit breaker equipped as indicated on the drawings.

3.9 FUSES

Equipment provided under this contract shall be provided with a complete set of properly rated fuses when the equipment manufacturer utilize fuses in the manufacture of the equipment, or if current-limiting fuses are required to be installed to limit the ampere-interrupting capacity of circuit breakers or equipment to less than the maximum available fault current at the location of the equipment to be installed. Fuses shall have a voltage rating of not less than the phase-to-phase circuit voltage, and shall have the time-current characteristics required for effective power system coordination. Time-delay and non-time-delay options shall be as specified.

3.9.1 Cartridge Fuses; Noncurrent-Limiting Type

Cartridge fuses of the noncurrent-limiting type shall be Class H, nonrenewable, dual element, time lag type and shall have interrupting capacity of 10,000 amperes. At 500 percent current, cartridge fuses shall not blow in less than 10 seconds.

3.9.2 Cartridge Fuses; Current-Limiting Type

Cartridge fuses, current-limiting type, Class [G] [J] [K] [L] [RK1] [RK5] [RK9] [T] [CC] shall have tested interrupting capacity not less than 100,000 amperes. Fuse holders shall be the type that will reject all Class H fuses.

3.9.3 Continuous Current Ratings (600 Amperes and Smaller)

Service entrance and feeder circuit fuses (600 amperes and smaller) shall be Class [RK1] [RK5] [J], current-limiting, [nontime-delay] [time-delay] with 200,000 amperes interrupting capacity.

3.9.4 Continuous Current Ratings (Greater than 600 Amperes)

Service entrance and feeder circuit fuses (greater than 600 amperes) shall be Class L, current-limiting, [nontime-delay] [time-delay] with 200,000 amperes interrupting capacity.

3.9.5 Motor and Transformer Circuit Fuses

Motor, motor controller, transformer, and inductive circuit fuses shall be Class RK1 or RK5, current-limiting, time-delay with 200,000 amperes interrupting capacity.

3.10 UNDERGROUND SERVICE

Unless otherwise indicated, interior conduit systems shall be stubbed out 1.5 m beyond the building wall and 600 mm below finished grade, for interface with the exterior service lateral conduits and exterior communications conduits. Outside conduit ends shall be bushed when used for direct burial service lateral conductors. Outside conduit ends shall be capped or plugged until connected to exterior conduit systems.

3.11 MOTORS

Each motor shall conform to the kW and voltage ratings indicated, and shall have a service factor and other characteristics that are essential to the proper application and performance of the motors under conditions shown or specified. Three-phase motors for use on 3-phase 208-volt systems shall have a nameplate rating of 200 volts. Unless otherwise specified, all motors shall have open frames, and continuous-duty classification based on a 40 degree C ambient temperature reference. Polyphase motors shall be squirrel-cage type, having normal-starting-torque and low-starting-current characteristics, unless other characteristics are specified in other sections of these specifications or shown on contract drawings. The Contractor shall be responsible for selecting the actual kilowatt (horsepower) ratings and other motor requirements necessary for the applications indicated. When electrically driven equipment furnished under other sections of these specifications materially differs from the design, the Contractor shall make the necessary adjustments to the wiring, disconnect devices and branch-circuit protection to accommodate the equipment actually installed.

3.12 MOTOR CONTROL

Each motor or group of motors requiring a single control and not controlled from a motor-control center shall be provided under other sections of these specifications with a suitable controller and devices that will perform the functions as specified for the respective motors. Each motor of 93 W (1/8 hp) or larger shall be provided with thermal-overload protection. Polyphase motors shall have overload protection in each ungrounded conductor. The overload-protection device shall be provided either integral with the motor or controller, or shall be mounted in a separate enclosure. Unless otherwise specified, the protective device shall be of the manually reset type. Single or double pole tumbler switches specifically designed for alternating-current operation only may be used as manual controllers for single-phase motors having a current rating not in excess of 80 percent of the switch rating. Automatic control devices such as thermostats, float or pressure switches may control the starting and stopping of motors directly, provided the devices used are designed for that purpose and have an adequate kilowatt rating. When the automatic-control device does not have such a rating, a magnetic starter shall be used, with the automatic-control device actuating the pilot-control circuit. When combination manual and automatic control is specified and the automatic-control device operates the motor directly, a double-throw, three-position tumbler or rotary switch shall be provided for the manual control; when the automatic-control device actuates the pilot control circuit of a magnetic starter, the latter shall be provided with a three-position selector switch marked MANUAL-OFF-AUTOMATIC. Connections to the selector switch shall be such that only the normal automatic regulatory control devices will be bypassed when the switch is in the Manual position; all safety control devices, such as low- or high-pressure cutouts, high-temperature cutouts, and motor-overload protective devices, shall be connected in the motor-control circuit in both the Manual and the Automatic positions of the selector switch. Control circuit connections to any MANUAL-OFF-AUTOMATIC switch or to more than one automatic regulatory control device shall be made in accordance with wiring diagram approved by the Contracting Officer unless such diagram is included on the drawings. All controls shall be 120 volts or less unless otherwise indicated.

3.12.1 Reduced-Voltage Controllers

Reduced-voltage controllers shall be provided for polyphase motors 18.6 kW or larger. Reduced-voltage starters shall be of the single-step

autotransformer, reactor, or resistor type having an adjustable time interval between application of reduced and full voltages to the motors. Wye-delta reduced voltage starters or part winding increment starters having an adjustable time delay between application of voltage to first and second winding of motor may be used in lieu of the reduced voltage starters specified above for starting of motor-generator sets, centrifugally operated equipment or reciprocating compressors provided with automatic unloaders.

3.12.2 Motor Control Centers

Control centers shall be indoor type and shall contain combination starters and other equipment as indicated. Control centers shall be NEMA ICS 2, Class II, Type B. Each control center shall be mounted on floor sills or mounting channels. Each circuit shall have a suitable metal or laminated plastic nameplate with white cut letters. Combination starters shall be provided with circuit breakers.

3.12.3 Contacts

Unless otherwise indicated, contacts in miscellaneous control devices such as float switches, pressure switches, and auxiliary relays shall have current and voltage ratings in accordance with NEMA ICS 2 for rating designation B300.

3.12.4 Safety Controls

Safety controls for boilers shall be connected to a 2-wire, 120 volt grounded circuit supplied from the associated boiler-equipment circuit. Where the boiler circuit is more than 120 volts to ground, safety controls shall be energized through a two-winding transformer having its 120 volt secondary winding grounded. Overcurrent protection shall be provided in the ungrounded secondary conductor and shall be sized for the load encountered.

3.13 MOTOR-DISCONNECT MEANS

Each motor shall be provided with a disconnecting means when required by NFPA 70 even though not indicated. For single-phase motors, a single or double pole toggle switch, rated only for alternating current, will be acceptable for capacities less than 30 amperes, provided the ampere rating of the switch is at least 125 percent of the motor rating. Switches shall disconnect all ungrounded conductors.

3.14 TRANSFORMER INSTALLATION

Three-phase transformers shall be connected only in a delta-wye configuration as indicated except isolation transformers having a one-to-one turns ratio. "T" connections may be used for transformers rated at 15 kVA or below. Dry-type transformers shown located within 1.5 meters of the exterior wall shall be provided in a weatherproof enclosure. Transformers to be located within the building may be provided in the manufacturer's standard, ventilated indoor enclosure designed for use in 40 degrees C ambient temperature, unless otherwise indicated.

3.15 LAMPS AND LIGHTING FIXTURES

Ballasted fixtures shall have ballasts which are compatible with the specific type and rating of lamps indicated and shall comply with the

applicable provisions of the publications referenced.

3.15.1 Lamps

Lamps of the type, wattage, and voltage rating indicated shall be delivered to the project in the original cartons and installed in the fixtures just prior to the completion of the project.

3.15.1.1 Incandescent

Incandescent lamps shall be for 125-volt operation unless otherwise indicated.

3.15.1.2 Fluorescent

Lamps shall be of the rapid-start type unless otherwise shown or approved. Fluorescent lamps for electronic ballasts shall be as indicated.

3.15.1.3 High-Intensity-Discharge

High-intensity-discharge lamps shall be the metal halidesodium type unless otherwise indicated, shown, or approved.

3.15.2 Fixtures

Fixtures shall be as shown and shall conform to the following specifications and shall be as detailed on Standard Drawing No. 40-06-04, Sheet Nos. 9, 17, 19, 28, 33, 36 and 39, which accompany and form a part of this specification for the types indicated. Illustrations shown on these sheets are indicative of the general type desired and are not intended to restrict selection to fixtures of any particular manufacturer. Fixtures of similar designs and equivalent energy efficiency, light distribution and brightness characteristics, and of equal finish and quality will be acceptable if approved. In suspended acoustical ceilings with fluorescent fixtures, the fluorescent emergency light fixtures shall be furnished with self-contained battery packs.

3.15.2.1 Accessories

Accessories such as straps, mounting plates, nipples, or brackets shall be provided for proper installation. Open type fluorescent fixtures with exposed lamps shall have a wire-basket type guard.

3.15.2.2 Suspended Fixtures

Suspended fixtures shall be provided with swivel hangers in order to ensure a plumb installation. Pendants, rods, or chains 1.2 meters or longer excluding fixture, shall be braced to limit swinging. Bracing shall be 3 directional, 120 degrees apart. Single unit suspended fluorescent fixtures shall have twin-stem hangers. Multiple unit or continuous-row fluorescent units shall have a tubing or stem for wiring at one point, and a tubing or rod suspension provided for each length of chassis including one at each end. Maximum distance between adjacent tubing or stems shall be 3.1 meters.

Rods shall be of not less than 4.8 mm (3/16 inch) diameter. Flexible raceway shall be installed to each fixture from an overhead junction box. Fixture to fixture wiring installation is allowed only when fixtures are installed end to end in a continuous run.

3.15.2.3 Ceiling Fixtures

Ceiling fixtures shall be coordinated with and suitable for installation in, on, or from the suspended ceiling provided under other sections of these specifications. Installation and support of fixtures shall be in accordance with the NFPA 70 and manufacturer's recommendations. Recessed fixtures shall have adjustable fittings to permit alignment with ceiling panels. Recessed fixtures installed in fire-resistive type of suspended ceiling construction shall have the same fire rating as the ceiling or shall be provided with fireproofing boxes having materials of the same fire rating as the ceiling panels, in conformance with UL-03. Surface-mounted fixtures shall be suitable for fastening to the structural support for ceiling panels.

3.15.2.4 Sockets

Sockets of industrial, strip, and other open type fluorescent fixtures shall be of the type requiring a forced movement along the longitudinal axis of the lamp for insertion and removal of the lamp.

3.16 BATTERY CHARGERS

Battery chargers shall be installed in conformance with NFPA 70.

3.17 EQUIPMENT CONNECTIONS

All wiring not furnished and installed under other sections of the specifications for the connection of electrical equipment as indicated on the drawings shall be furnished and installed under this section of the specifications. Connections shall comply with the applicable requirements of paragraph WIRING METHODS. Flexible conduits 2 m or less in length shall be provided to all electrical equipment subject to periodic removal, vibration, or movement and for all motors. All motors shall be provided with separate grounding conductors. Liquid-tight conduits shall be used in damp or wet locations.

3.18 CIRCUIT PROTECTIVE DEVICES

The Contractor shall calibrate, adjust, set and test each new adjustable circuit protective device to ensure that they will function properly prior to the initial energization of the new power system under actual operating conditions.

3.19 PAINTING AND FINISHING

Field-applied paint on exposed surfaces shall be provided under Section 09900 PAINTING, GENERAL.

3.20 REPAIR OF EXISTING WORK

The work shall be carefully laid out in advance, and where cutting, channeling, chasing, or drilling of floors, walls, partitions, ceiling, or other surfaces is necessary for the proper installation, support, or anchorage of the conduit, raceways, or other electrical work, this work shall be carefully done, and any damage to building, piping, or equipment shall be repaired by skilled mechanics of the trades involved at no additional cost to the Government.

3.21 FIELD TESTING

Field testing shall be performed in the presence of the Contracting Officer. The Contractor shall notify the Contracting Officer 10 days prior to conducting tests. The Contractor shall furnish all materials, labor, and equipment necessary to conduct field tests. The Contractor shall perform all tests and inspection recommended by the manufacturer unless specifically waived by the Contracting Officer. The Contractor shall maintain a written record of all tests which includes date, test performed, personnel involved, devices tested, serial number and name of test equipment, and test results. All field test reports will be signed and dated by the Contractor.

3.21.1 Safety

The Contractor shall provide and use safety devices such as rubber gloves, protective barriers, and danger signs to protect and warn personnel in the test vicinity. The Contractor shall replace any devices or equipment which are damaged due to improper test procedures or handling.

3.21.2 Ground-Resistance Tests

The resistance of the grounding grid shall be measured using the fall-of-potential method defined in IEEE Std 81. Soil resistivity in the area of the grid shall be measured concurrently with the grid measurements. Ground resistance measurements shall be made before the electrical distribution system is energized and shall be made in normally dry conditions not less than 48 hours after the last rainfall. Resistance measurements of separate grounding electrode systems shall be made before the systems are bonded together below grade. The combined resistance of separate systems may be used to meet the required resistance, but the specified number of electrodes must still be provided.

a. Grid electrode - 10 ohms.

3.21.3 Ground-Grid Connection Inspection

All below-grade ground-grid connections will be visually inspected by the Contracting Officer before backfilling. The Contractor shall notify the Contracting Officer 24 hours before the site is ready for inspection.

3.21.4 Cable Tests

The Contractor shall be responsible for identifying all equipment and devices that could be damaged by application of the test voltage and ensuring that they have been properly disconnected prior to performing insulation resistance testing. An insulation resistance test shall be performed on all low and medium voltage cables after the cables are installed in their final configuration and prior to energization. The test voltage shall be 500 volts DC applied for one minute between each conductor and ground and between all possible combinations of conductors. The minimum value of resistance shall be:

R in megohms = (rated voltage in kV + 1) x 304,800/(length of cable in meters)

Each cable failing this test shall be repaired or replaced. The repaired cable system shall then be retested until failures have been eliminated.

3.21.4.1 Medium Voltage Cable Tests

a. Continuity test.

b. Insulation resistance test.

c. DC high-potential test.

3.21.4.2 Low Voltage Cable Tests

a. Continuity test.

b. Insulation resistance test.

3.21.5 Motor Tests

a. Phase rotation test to ensure proper directions.

b. Operation and sequence of reduced voltage starters.

c. High potential test on each winding to ground.

d. Insulation resistance of each winding to ground.

e. Vibration test.

f. Dielectric absorption test on motor [and starter].

3.21.6 Dry-Type Transformer Tests

The following field tests shall be performed on all dry-type transformers 25 kVA and above.

a. Insulation resistance test phase-to-ground, each phase.

b. Turns ratio test.

3.21.7 Circuit Breaker Tests

The following field tests shall be performed on circuit breakers.

3.21.8 Motor Control Centers

a. Insulation resistance test phase-to-phase, all combinations.

b. Insulation resistance test phase-to-ground, each phase.

c. Manual and electrical operational tests.

3.22 OPERATING TESTS

After the installation is completed, and at such time as the Contracting Officer may direct, the Contractor shall conduct operating tests for approval. The equipment shall be demonstrated to operate in accordance with the specified requirements. An operating test report shall be submitted in accordance with paragraph FIELD TEST REPORTS.

3.23 FIELD SERVICE

3.23.1 Onsite Training

The Contractor shall conduct a training course for the operating staff as designated by the Contracting Officer. The training period shall consist of a total of 8 hours of normal working time and shall start after the system is functionally completed but prior to final acceptance tests. The course instruction shall cover pertinent points involved in operating, starting, stopping, servicing the equipment, as well as all major elements of the operation and maintenance manuals. Additionally, the course instructions shall demonstrate all routine maintenance operations. A VHS format video tape of the entire training shall be submitted.

3.23.2 Installation Engineer

After delivery of the equipment, the Contractor shall furnish one or more field engineers, regularly employed by the equipment manufacturer to supervise the installation of equipment, assist in the performance of the onsite tests, oversee initial operations, and instruct personnel as to the operational and maintenance features of the equipment.

3.24 ACCEPTANCE

Final acceptance of the facility will not be given until the Contractor has successfully completed all tests and after all defects in installation, material or operation have been corrected.

-- End of Section --

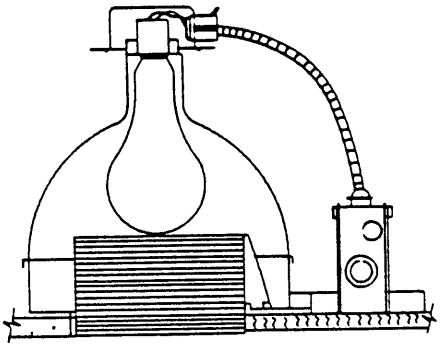

TYPE 116

Recessed Round ~~Incandescent~~ Compact Fluorescent Downlight

Fixture shall conform to UL 1571. Fixture shall have thermal protection or shall be UL listed as suitable for use in direct contact with insulation. Fixture shall be rated for a ~~300~~ 39W watt lamp. The mounting plate shall be steel. The reflector shall be highly polished aluminum. The baffle shall be black, constructed of aluminum, and multigrooved for low brightness. The baffle shall be securely attached to the fixture housing and shall be easily removed without the use of tools. Fixture shall be provided with a through wiring junction box and shall be prewired.

Fixture type indicated on this sheet shall also conform to requirements specified and indicated in the contract documents.

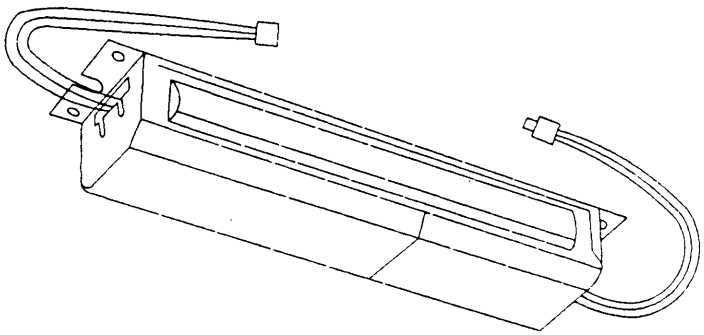

TYPE 200

Emergency Battery and Lamp Supply Unit for Fluorescent Fixtures

The unit shall conform to UL 924 and be UL Listed for field or factory installation. The unit shall be dual-rated for use on either 120 or 277 Volt lighting circuits, and shall meet or exceed NFPA 70 time and voltage requirements. The unit shall be capable of automatically supplying a minimum of 15 percent of the rated lumen output of a standard 4-foot, 40 watt rapid start fluorescent lamp in one minute following the failure of the normal power supply. It shall provide a minimum of 60 percent of the initial emergency illumination at the end of the 90-minute discharge period. The battery charger shall be capable of fully recharging the battery within 24 hours after the return of the normal power supply and, under normal operations, shall trickle charge the battery to maintain it in a fully charged condition. The unit shall be capable of operating at least one of the lamps in the fixture which also houses the unit and shall consist of a high temperature, pocket-plate type of nickel cadmium battery, charger, and electronic circuitry in one compact housing. A conveniently located test switch shall be provided to test the solid-state circuitry and the readiness of the battery. The battery shall be designed to require no maintenance during the expected life, be warranted for not less than three years from the date of the purchase of the unit, and be field replaceable without requiring removal of other components of the unit. Other components of the unit shall be fully warranted for not less than 18 months from the date of purchase of the unit.

The Emergency Battery and Lamp Supply Unit indicated on this sheet shall be provided as indicated on other sheets, and shall also conform to requirements specified or indicated in the contract documents.

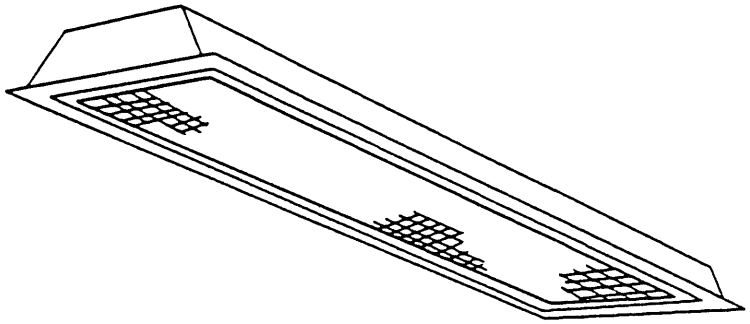

TYPE 204
Static Troffer

TYPE 205
Air Handling Troffer

Recessed Fluorescent Fixture, 1-foot by 4-foot

First Suffix	Second Suffix	Third Suffix	Description
A			Single lamp
B			Two lamp
	1		Prismatic acrylic lens
	2		1/2- by 1/2- by 1/2-inch acrylic cube louver
	3		1/2- by 1/2- by 1/2-inch polystyrene cube louver
		A	Type 200 emergency unit

Fixture shall conform to UL 1570. Housing shall be complete with integral side trim flanges. Housing and trim flanges shall be cold-rolled steel. The lens or louver shall be installed in a manner that will prevent it from coming loose due to vibration. The ballast and wiring shall be enclosed in a wireway that is continuous throughout the length of the fixture and which forms a wireway for circuits through the fixture. All metal parts shall receive a rust inhibitive coating before application of the finish coat. The finish coat shall be baked white enamel. Lenses and acrylic cube louvers shall be 100 percent virgin acrylic plastic. The lens or louver shall be four feet in length. Acrylic lens shall be flat, 0.125 inch nominal thickness, low brightness, with smooth top surface and a lower surface having a regular array of prismatic elements. Single-lamp ballast shall be used for individually mounted single-lamp fixtures and where single-lamp fixtures occur at the ends of continuous rows, except two-lamp ballasts shall be used for tandem mounted single-lamp fixtures. Standard ballast(s) shall be the Class P, high power factor type which has been approved for the application by the Certified Ballast Manufacturers. Fixture shall be prewired.

Fixture types indicated on this sheet shall also conform to requirements specified and indicated in the contract documents.

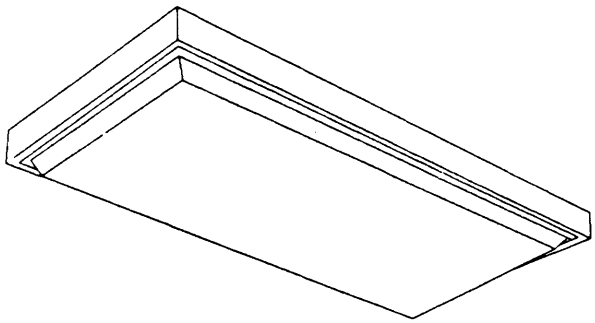

TYPE 216

Surface, Ceiling Mounted Fluorescent Fixture, 2-foot by 4-foot, With Drop Opal Lens

First Suffix	Second Suffix	Description
A		Two lamps
B		Three lamps
C		Four lamps
	1	Type 200 emergency unit

Fixture shall conform to UL 1570. Housing shall be cold-rolled steel. The lens shall be installed in a manner that will prevent it from coming loose due to vibration. The ballasts and wiring shall be enclosed in a wireway that is continuous throughout the length of the fixture and which forms a wireway for circuits through the fixture. All metal parts shall receive a rust inhibitive coating before application of the finish coat. The finish coat shall be baked white enamel. Lens shall be 100 percent virgin acrylic plastic. Standard ballast(s) shall be the Class P, high power factor type which has been approved for the application by the Certified Ballast Manufacturers. Fixture shall be prewired.

Fixture type indicated on this sheet shall also conform to requirements specified and indicated in the contract documents.

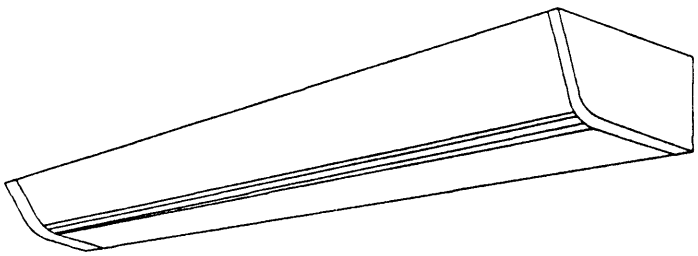

TYPE 224
One Lamp
48-inch Length

TYPE 225
Two Lamps
48-inch Length

Enclosed, Wall Mounted, Direct Fluorescent Fixture

Fixture shall conform to UL 1570. Housing shall be of cold-rolled, die-formed steel. The back housing shall be one piece, solid along its entire length. End plates shall be die-formed and shall be fastened securely to the housing in a manner that permits no light leakage. All metal parts shall receive a rust inhibitive coating and a baked white enamel finish coat. Lens shall be prismatic, one piece, 0.125 inch nominal thickness, and 100 percent virgin acrylic. The lens shall be easily removed without the use of tools and shall be held in place by concealed hinges, by reinforcing ribs along the edges, or by resting on the end plates. The lens shall be attached to the housing so there is no light leakage. Standard ballast(s) shall be the Class P, high power factor type which has been approved for the application by the Certified Ballast Manufacturers. Fixture shall be prewired.

Fixture types indicated on this sheet shall also conform to requirements specified and indicated in the contract documents.

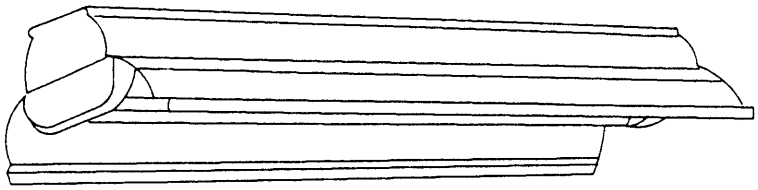

TYPE 230
Suspension Mounted, Industrial,
Open Type Fluorescent Fixture, 4-Foot

First-Suffix	Second-Suffix	Description
A		Two lamps
B		Three lamps
	1	8 to 15 percent uplight
	2	18 to 25 percent uplight

Fixture shall conform to UL 1570. Standard ballast(s) shall be the Class P, high power factor type approved for the application by the Certified Ballast Manufacturers. Channel housing, end fittings, and reflector shall be constructed with die-formed, cold-rolled steel. Reflector finish shall be porcelain enamel, baked white enamel or aluminum oxide. Sockets shall be of the type requiring a forced movement along the longitudinal axis of the lamp for insertion and removal of the lamp. Fixture shall be prewired. Fluoresent tubes shall be protected by a virgin acrylic protective sleeve and clear plastic vented end caps.

Fixture type indicated on this sheet shall also conform to requirements specified and indicated in the contract documents.

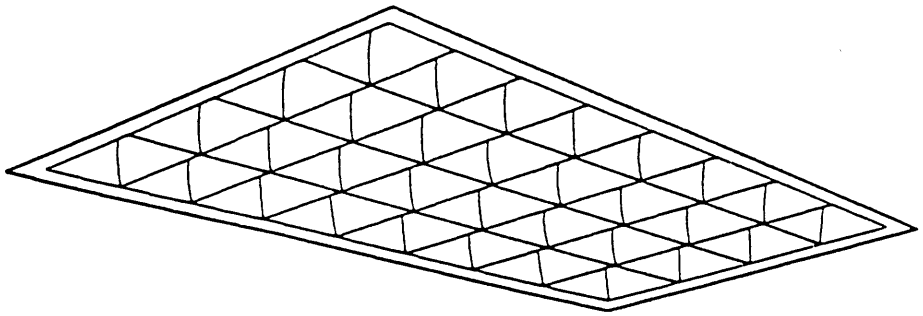

TYPE 234 Static Troffer	TYPE 235 Air Handling Troffer	TYPE 236 Heat Removal/ Transfer Troffer

Recessed Fluorescent Fixture, 2-foot by 4-foot, With Parabolic Louver

First Suffix	Second Suffix	Description
A		Two-lamp, ~~12-cell~~ 1 1/2" x 1 1/2" square louver
~~B~~		~~Three-lamp, 18-cell louver~~
~~C~~		~~Four-lamp, 32-cell louver~~
	1	Type 200 emergency unit

Fixture shall conform to UL 1570. Housing, trim flanges if any, shall be die-formed, cold-rolled steel embossed if necessary to ensure structural rigidity. Metal parts to be painted shall receive one or more rust inhibitive coatings before application of the finish coat. Reflective surfaces shall be finished to provide an initial and minimum reflectance of not less than 85 percent. The louver shall be the anodized or semi-specular finished aluminum type consisting of inter- connected cellular baffles not less than three nor more than four inches in depth. The louver shall be hinged on either longitudinal side using die-formed steel hinges, and shall be held securely in place by the hinges and spring-steel latches that are inconspicuous or concealed from view when louver is in place and latches are closed. Securing the louver in place shall prevent light leakage and movement of the louver when subjected to normal vibrations. The ballast(s) and fixture wiring shall be concealed by a snap-in type of metal cover which can be removed and replaced without the use of tools. Standard ballast(s) shall be of the Class P, high power factor type that has been approved by the Certified Ballast Manufacturers for the application. Ballast(s), lampholders, louver and the wireway cover shall be removable and replaceable without removal of the fixture from the ceiling. Fixture shall be prewired.

Fixture type indicated on this sheet shall also conform to requirements specified and indicated in the contract documents.

SECTION 16528

EXTERIOR LIGHTING INCLUDING SECURITY AND CCTV APPLICATIONS

PART 1 GENERAL

1.1 REFERENCES

The publications listed below form a part of this specification to the extent referenced. The publications are referred to in the text by basic designation only.

AMERICAN ASSOCIATION OF STATE HIGHWAY AND TRANSPORTATION OFFICIALS (AASHTO)

AASHTO LTS-2	(1985; Rev 1986, 1987, 1988) Standard Specifications for Structural Supports for Highway Signs, Luminaires and Traffic Signals

AMERICAN NATIONAL STANDARDS INSTITUTE (ANSI)

ANSI C2	(1997) National Electrical Safety Code
ANSI C78.1350	(1990) 400-Watt, 100-Volt, S51 Single-Ended High-Pressure Sodium Lamps
ANSI C78.1375	(1990) 400-Watt, M59 Single-Ended Metal-Halide Lamps
ANSI C78.1376	(1990) 1000-Watt, M47 Single-Ended Metal-Halide Lamps
ANSI C80.1	(1990) Rigid Steel Conduit - Zinc Coated
ANSI C82.4	(1992) Ballasts for High-Intensity-Discharge and Low-Pressure Sodium Lamps (Multiple-Supply Type)
ANSI C119.1	(1986) Sealed Insulated Underground Connector Systems Rated 600 Volts
ANSI C135.1	(1979) Galvanized Steel Bolts and Nuts for Overhead Line Construction
ANSI C135.14	(1979) Staples with Rolled or Slash Points for Overhead Line Construction
ANSI C136.2	(1985) Luminaires Voltage Classification
ANSI C136.3	(1989) Luminaire Attachments - for Roadway Lighting Equipment
ANSI C136.6	(1990) Roadway Lighting Equipment - Metal Heads and Reflector Assemblies - Mechanical and Optical Interchangeability

ANSI C136.9	(1990) Roadway Lighting Equipment - Socket Support Assemblies for Metal Heads - Mechanical Interchangeability
ANSI C136.11	(1988) Multiple Sockets for Roadway Lighting Equipment
ANSI C136.13	(1992) Metal Brackets for Wood Poles
ANSI C136.15	(1986) High-Intensity-Discharge and Low-Pressure Sodium Lamps in Luminaires - Field Identification

AMERICAN SOCIETY FOR TESTING AND MATERIALS (ASTM)

ASTM A 123	(1989a) Zinc (Hot-Dip Galvanized) Coatings on Iron and Steel Products
ASTM A 153	(1982; R 1987) Zinc Coating (Hot-Dip) on Iron and Steel Hardware
ASTM A 575	(1989) Steel Bars, Carbon, Merchant Quality, M-Grades
ASTM A 576	(1990b) Steel Bars, Carbon, Hot-Wrought, Special Quality
ASTM B 117	(1994) Operating Salt Spray (Fog) Testing Apparatus
ASTM D 1654	(1992) Evaluation of Painted or Coated Specimens Subjected to Corrosive Environments

ILLUMINATING ENGINEERING SOCIETY OF NORTH AMERICA (IESNA)

IESNA ARP-8	(1983) Roadway Lighting

INSTITUTE OF ELECTRICAL AND ELECTRONICS ENGINEERS (IEEE)

IEEE C62.41	(1991) Surge Voltages in Low-Voltage AC Power Circuits
IEEE Std 81	(1983) Guide for Measuring Earth Resistivity, Ground Impedance, and Earth Surface Potentials of a Ground System

NATIONAL ELECTRICAL MANUFACTURERS ASSOCIATION (NEMA)

NEMA 250	(1991) Enclosures for Electrical Equipment (1000 Volts Maximum)
NEMA ICS 6	(1993) Enclosures for Industrial Control and Systems
NEMA OS 1	(1989) Sheet-Steel Outlet Boxes, Device Boxes, Covers, and Box Supports

NEMA RN 1	(1989) Polyvinyl-Chloride (PVC) Externally Coated Galvanized Rigid Steel Conduit and Intermediate Metal Conduit

NATIONAL FIRE PROTECTION ASSOCIATION (NFPA)

NFPA 70	(1996) National Electrical Code

UNDERWRITERS LABORATORIES (UL)

UL 6	(1993) Rigid Metal Conduit
UL 44	(1991; Rev thru Jan 1995) Rubber-Insulated Wires and Cables
UL 467	(1993) Grounding and Bonding Equipment
UL 486A	(1991; Rev Oct 1991) Wire Connectors and Soldering Lugs for Use with Copper Conductors
UL 486B	(1991; Rev thru Apr 1992) Wire Connections for Use with Aluminum Conductors
UL 514A	(1991) Metallic Outlet Boxes
UL 514B	(1992; Rev thru Apr 1995) Fittings for Conduit and Outlet Boxes
UL 854	(1991; Rev thru Apr 1993) Service-Entrance Cables
UL 1029	(1994) High-Intensity-Discharge Lamp Ballasts
UL 1449	(1985; Errata Apr 1986) Transient Voltage Surge Suppressors
UL 1572	(1991; Rev thru Jul 1994) High Intensity Discharge Lighting Fixtures

1.2 SYSTEM DESCRIPTION

1.2.1 Lighting System

The lighting system shall be configured as specified and shown. The system shall include all fixtures, hardware, poles, cables, connectors, adapters and appurtenances needed to provide a fully functional lighting system.

1.2.2 Design Requirements for CCTV Assessment Lighting

The CCTV Assessment Lighting system shall be configured as specified and shown. Equipment shall conform to NFPA 70 and ANSI C2. The lighting configuration shall provide sufficient light for optimum CCTV assessment of each zone. The system shall include all fixtures, hardware, poles, cables, connectors, adapters, and appurtenances needed to provide a fully functional lighting system.

1.2.3 Electrical Requirements

The equipment shall operate from a voltage source as shown, plus or minus 10 percent, and 60 Hz, plus or minus 2 percent.

1.2.4 Power Line Surge Protection

Transient voltage surge suppressors shall be provided for all electronic equipment. Surge suppressors shall meet the requirements of IEEE C62.41, and be UL listed as having been tested in accordance with UL 1449. Surge current per phase 75,000 amps. Surge suppressor ratings shall be 277 volts rms, operating voltage; 60 Hz; 1-phase; 2 wire with ground; transient suppression voltage peak let-through-voltage of 800 volts. Fuses shall not be used as surge suppression.

1.2.5 Interface Between Lighting System and Power Distribution

Conductors shall include all conductors extending from the load side of the primary and secondary power panels that serve assessment lighting equipment shall be as indicated.

1.2.6 Standard Products

Materials and equipment shall be standard products of manufacturer regularly engaged in the manufacture of such products. Items of equipment shall essentially duplicate equipment that has been in satisfactory use at least 2 years prior to bid opening.

1.2.7 Protection of Security Lighting System Components

1.2.7.1 Components and Conductors

Security lighting system conductors shall be protected from damage. Lighting system conductors shall be installed in raceways as shown. The conductors shall be in rigid steel conduit of the indicated size.

1.3 CORROSION PROTECTION

1.3.1 Aluminum Materials

Aluminum shall not be used in contact with earth or concrete. Where aluminum conductors are connected to dissimilar metal, fittings conforming to UL 486B shall be used. Aluminum conductors shall not be used.

1.3.2 Ferrous Metal Materials

1.3.2.1 Hardware

Ferrous metal hardware shall be hot-dip galvanized in accordance with ASTM A 153 and ASTM A 123.

1.3.2.2 Equipment

Equipment and component items, including but not limited to metal poles and ferrous metal luminaires not hot-dip galvanized or porcelain enamel finished, shall be provided with corrosion-resistant finishes which shall withstand 120 hours of exposure to the salt spray test specified in ASTM B 117 without loss of paint or release of adhesion of the paint primer coat to the metal surface in excess of 1.6 mm (1/16 inch) from the test mark. The scribed test mark and test evaluation shall have a rating of not less

than 7 in accordance with TABLE 1, (procedure A) of ASTM D 1654. Cut edges or otherwise damaged surfaces of hot-dip galvanized sheet steel or mill galvanized sheet steel shall be coated with a zinc rich paint conforming to the manufacturer's standard.

1.3.3 Finishing

Painting required for surfaces not otherwise specified and finish painting of items only primed at the factory, shall be as specified in Section 09900 PAINTING, GENERAL.

1.4 SUBMITTALS

Government approval is required for submittals with a "GA" designation; submittals having an "FIO" designation are for information only. The following shall be submitted in accordance with section 01330 SUBMITTAL PROCEDURES:

SD-01 Data

Equipment and Materials; GA|ED.

Data published by the manufacturer of each item on the list of equipment and material, to permit verification that the item proposed is of the correct size, properly rated or applied, or is otherwise suitable for the application and fully conforms to the requirements specified.

Spare Parts; FIO;AR.

Spare parts data for each item of material and equipment specified, after approval of detail drawings for materials and equipment, and not later than 4 months before the date of beneficial occupancy. The data shall include a complete list of parts, special tools, and supplies, with current unit prices and sources of supply.

SD-04 Drawings

Lighting System; GA|ED.

Detail drawings for the complete system and for poles, lighting fixtures and bracket arms. For CCTV lighting, data shall include:

a. Lamp strike and restrike times.

b. A typical zone layout showing light locations, isolux patterns, and lighting ratios for building walls.

As-Built Drawings; FIO;AR.

Final as-built drawings shall be finished drawings on mylar or vellum and shall be delivered with the final test report.

SD-09 Reports

Operating Test; GA|ED.

Test procedures and reports for the Operating Test. After receipt by the Contractor of written approval of the test procedures, the Contractor shall schedule the tests. The final test procedures report shall be delivered

after completion of the tests.

Ground Resistance Measurements; FIO;AR.

The measured resistance to ground of each separate grounding installation, indicating the location of the rods, the resistance of the soil in ohms per millimeter and the soil conditions at the time the measurements were made. The information shall be in writing.

SD-19 Operation and Maintenance Manuals

Lighting System; FIO;AR.

A draft copy of the operation and maintenance manuals, prior to beginning the tests for use during site testing. Final copies of the manuals as specified bound in hardback, loose-leaf binders, within 30 days after completing the field test. The draft copy used during site testing shall be updated with any changes required, prior to final delivery of the manuals. Each manual's contents shall be identified on the cover. The manual shall include names, addresses, and telephone numbers of each subcontractor installing equipment and systems, and nearest service representatives for each item of equipment for each system. The manuals shall have a table of contents and tab sheets. Tab sheets shall be placed at the beginning of each chapter or section and at the beginning of each appendix. The final copies delivered after completion of the field test shall include modifications made during installation checkout and acceptance.

PART 2 PRODUCTS

2.1 STANDARD PRODUCT

Material and equipment shall be the standard product of a manufacturer regularly engaged in the manufacture of the product and shall essentially duplicate items that have been in satisfactory use for at least 2 years prior to bid opening. Items of the same classification shall be identical including equipment, assemblies, parts, and components.

2.2 BRACKET ARMS

2.2.1 On Aluminum Poles

Poles shall be provided with bracket arms of the support arm style and of the length indicated on drawings. Bracket arms shall conform to the design of the pole provided. The bracket arms shall be capable of supporting the equipment to be mounted on it with the maximum wind and ice loading encountered at the site. Strength of bracket arms shall be in accordance with ANSI C136.13. Steel brackets shall be galvanized. Wood bracket arms shall not be used.

2.2.2 Floodlight Brackets

Floodlight brackets shall be coordinated with the floodlight support provided.

2.3 CABLE

The Contractor shall provide all wire and cable not indicated as government furnished equipment. Wire and cable components shall be able to withstand

the jobsite environment for a minimum of 20 years.

2.3.1 Insulated Cable

Cable shall be type USE conforming to UL 854, with copper conductors and type RHW or XHHW insulation conforming to UL 44, and shall include green ground conductor. Cable shall be provided with insulation of a thickness not less than that given in column A of TABLE 15.1 of UL 854. Cable shall be rated 600 volts. Parts of the cable system such as splices and terminations shall be rated not less than 600 volts. The size and number of conductors and the number of cables shall be as indicated. Conductors larger than No. 8 AWG shall be stranded.

2.4 CABLE SPLICES AND CONNECTORS

Cable splices and connectors shall conform to UL 486A. Underground splices and connectors shall also conform to the requirements of ANSI C119.1.

2.5 CABLE BOXES

Boxes and covers shall be made of cast iron with zinc coated or aluminized finish, and shall be of the sizes indicated on drawings. The minimum inside dimensions shall be not less than 304.8 mm (12 inches) square by 152.4 mm (6 inches) deep and not less than required to house the cable splice. A suitable gasket shall be installed between the box and cover for watertightness. A sufficient number of screws shall be installed to hold the cover in place along the entire surface of contact. Grounding lugs shall be provided.

2.6 CONDUIT, DUCTS AND FITTINGS

2.6.1 Conduit, Rigid Steel

Rigid steel conduit shall conform to ANSI C80.1 and UL 6.

2.6.2 Conduit Coatings

Underground metallic conduit and fittings shall be coated with a plastic resin system conforming to NEMA RN 1, Type 40. Epoxy systems may also be used.

2.6.3 Conduit Fittings and Outlets

2.6.3.1 Boxes, Metallic Outlets

NEMA OS 1 and UL 514A.

2.6.3.2 Fittings for Conduit and Outlet Boxes

UL 514B.

2.7 GROUND RODS

Ground rods shall be of copper clad steel conforming to UL 467 not less than 19.1 mm (3/4 inch) in diameter by 3.1 m (10 feet) in length of the sectional type driven full length into earth. Provide one for each light pole.

2.8 POLES

Metal shall be the pole manufacturer's standard design for supporting the number of fixtures indicated. Poles shall be designed for a wind velocity of 40.2 meters per second (90 mph) at the base of the pole, for a wind gust factor of 1.3, and for the height and drag factors recommended by AASHTO LTS-2. The effective projected area of luminaires and other pole-mounted devices shall be taken into account in pole design. Poles shall have grounding provisions. The type of pole shaft material provided shall not be mixed on any project. Grounding connection shall be provided near the bottom of each metal pole and at each concrete pole anchor base. Scratched, stained, chipped, or dented poles shall not be installed.

2.8.1 Aluminum Poles

Aluminum poles and brackets for walkway, parking and bldg CCTV lighting shall have a dark anodic bronze finish to match fixtures and shall not be painted. Manufacturer's standard provision shall be made for protecting the finish during shipment and installation. Minimum protection shall consist of spirally wrapping each pole shaft with protective paper secured with tape, and shipping small parts in boxes.

a. Shafts shall be tapered square and of seamless construction. The wall thickness shall be at least 4.8 mm (0.188 in). Exterior surfaces shall be free of protuberances, dents, cracks, and discoloration. Material for shafts shall be 6063 aluminum alloy; after fabrication, the alloy shall have a T6 temper. Tops of shafts shall be fitted with a square or tapered cover. Bases shall be anchor bolt mounted, made of cast aluminum alloy 356-T6, and shall be machined to receive the lower end of shafts. Joints between shafts and bases shall be welded. Bases shall be provided with four holes, spaced 90 degrees apart, for anchorage.

b. Hardware, except anchor bolts, shall be either 2024-T4 anodized aluminum alloy or stainless steel.

2.8.2 Anchor Bolts

Anchor bolts shall be the pole manufacturer's standard, but not less than necessary to meet the pole wind and ice loading, herein and other specified design requirements.

2.9 POLE LINE HARDWARE

Zinc coated hardware shall conform to ANSI C135.1 and ANSI C135.14, and steel hardware material shall conform to ASTM A 575 and ASTM A 576. Hardware shall be hot-dip galvanized in accordance with ASTM A 153.

2.10 ELECTRICAL ENCLOSURES

The Contractor shall provide metallic enclosures as needed to house the CCTV lighting equipment. Enclosures shall conform to NEMA ICS 6 and NEMA 250. Enclosures shall be provided with lockable or padlock handles. Keys for lockable enclosures shall be delivered to the Contracting Officer. The enclosures shall be as specified or as shown on the drawings.

2.10.1 Interior Enclosures

Enclosures to house lighting equipment in an interior environment shall meet the requirements of a NEMA 12 enclosure as defined in NEMA 250.

2.10.2 Exposed-to-Weather Enclosures

Enclosures to house lighting equipment in an outdoor environment shall meet the requirements of a NEMA 4 enclosure as defined in NEMA 250.

2.10.3 Corrosion Resistant Enclosures

Enclosures to house lighting equipment in a corrosive environment shall meet the requirements of a NEMA 4X enclosure as defined in NEMA 250.

2.11 ILLUMINATION

2.11.1 General Lighting

Luminaires, ballasts, lamps, and control devices required for general area lighting, including floodlighting shall be in accordance with sheets 51 and 60 of Standard Detail No. 40-06-04, attached to these specifications.

2.12 LAMPS AND BALLASTS, HIGH INTENSITY DISCHARGE (HID) SOURCES

2.12.1 High-Pressure Sodium

Lamps shall conform to ANSI C78.1350. Ballasts shall conform to ANSI C82.4, or UL 1029. High-pressure sodium lamps shall be clear.

2.12.2 Metal-Halide

Lamps shall be made by a manufacturer with not less than 5 years experience in making metal-halide lamps. Metal-halide lamps shall conform to ANSI C78.1375 or ANSI C78.1376. Ballasts shall conform to ANSI C82.4or UL 1029.

2.13 LUMINAIRE COMPONENTS

Luminaire components shall conform to the following: attachments, ANSI C136.3; voltage classification, ANSI C136.2; field identification marking, ANSI C136.15; interchangeability, ANSI C136.6 and ANSI C136.9; and sockets, ANSI C136.11.

2.14 LIGHTING CONTROL EQUIPMENT

2.14.1 Timer Control Switches

Astronomic dial type arranged to turn "ON" at sunset, and turn "OFF" at sunrise, automatically changing the settings each day in accordance with seasonal changes of sunset and sunrise shall be provided. A switch rated 277 volts, having automatically wound spring mechanism or battery backed electronic clock to maintain accurate time for a minimum of 7 hours following a power failure shall be provided. A time switch with a manual on-off bypass switch shall be provided. Housing for the time switch shall be a surface mounted, NEMA 1 (indoor)+ enclosure conforming to NEMA ICS 6.

2.15 PHOTOMETRIC DISTRIBUTION CLASSIFICATION

Photometrics shall conform to IESNA ARP-8.

2.16 LUMINAIRES, FLOODLIGHTING

2.16.1 HID and Incandescent

HID lighting fixtures shall conform to UL 1572.

2.17 FIXTURES

Standard fixtures shall be as detailed on Standard Detail No. 40-06-04, Sheet Nos. 51 and 60 which accompany and form a part of this specification. Special fixtures shall be as indicated on the drawings. Illustrations shown on these sheets or on the drawings are indicative of the general type desired and are not intended to restrict selection to fixtures of any particular manufacturer. Fixtures of similar design, equivalent light distribution and brightness characteristics, equal finish and quality will be acceptable as approved.

2.17.1 Accessories

Accessories such as straps, mounting plates, nipples, or brackets shall be provided for proper installation.

2.17.2 Special Fixtures

The types of special fixtures are designated by letters and numbers. For example, SP-1 denotes special Type 1.

2.17.3 In-Line Fuse

An in-line fuse shall be provided for each fixture, and shall consist of a fuse and a UL approved waterproof fuse holder rated at 30 amperes, 600 volts, with insulated boots. Fuse rating shall be 600 volts.

PART 3 EXECUTION

3.1 GENERAL

The Contractor shall install all system components, including government furnished equipment, and appurtenances in accordance with the manufacturer's instructions, ANSI C2, and contract documents, and shall furnish necessary hardware, fixtures, cables, wire, connectors, interconnections, services, and adjustments required for a complete and operable system.

3.1.1 Current Site Conditions

The Contractor shall verify that site conditions are in agreement with the design package. The Contractor shall report all changes to the site or conditions that will affect performance of the system to the Government. The Contractor shall not take any corrective action without written permission from the Government.

3.1.2 Existing Equipment

The Contractor shall connect to and utilize existing lighting equipment and devices as shown. Lighting equipment that is usable in their original configuration without modification may be reused with Government approval. The Contractor shall perform a field survey, including testing and inspection of existing lighting equipment and control lines intended to be incorporated into the lighting system, and furnish a report to the Government. For those items considered nonfunctioning, specification sheets, or written functional requirements to support the findings and the estimated cost to correct the deficiency shall be provided with the report.

As part of the report, the Contractor shall include the scheduled need date for connection to all existing equipment. The Contractor shall make written requests and obtain approval prior to disconnecting any control lines and equipment, and creating equipment downtime. Such work shall proceed only after receiving Government approval of these requests. If any device fails after the Contractor has commenced work on that device, the Contractor shall diagnose the failure and perform any necessary corrections to the equipment. The Government is responsible for maintenance and repair of Government equipment. The Contractor shall be held responsible for repair costs due to Contractor negligence or abuse of Government equipment.

3.2 ENCLOSURE PENETRATIONS

Enclosure penetrations shall be from the bottom unless the system design requires penetrations from other directions. Penetrations of interior enclosures involving transitions of conduit from interior to exterior, and penetrations on exterior enclosures shall be sealed with rubber silicone sealant to preclude the entry of water. The conduit riser shall terminate in a hot-dipped galvanized metal cable terminator. The terminator shall be filled with an approved sealant as recommended by the cable manufacturer, and in such a manner that the cable is not damaged.

3.3 PREVENTION OF CORROSION

3.3.1 Aluminum

Aluminum shall not be used in contact with earth or concrete, and where connected to dissimilar metal, shall be protected by approved fittings and treatment.

3.3.2 Steel Conduits

Steel conduits shall not be installed within concrete slabs-on-grade. Steel conduits installed underground or under slabs-on-grade, or penetrating slabs-on-grade, shall be field wrapped with 254 micrometers (0.010 inch) thick pipe-wrapping plastic tape applied with a 50 percent overlap, or shall have a factory-applied plastic resin, epoxy coating. Zinc coating may be omitted from steel conduit which has a factory-applied epoxy coating.

3.3.3 Cold Galvanizing

Field welds and/or brazing on factory galvanized boxes, enclosures, conduits, etc. shall be coated with a cold galvanized paint containing at least 95 percent zinc by weight.

3.4 CABLE INSTALLATION

Cable and all parts of the cable system such as splices and terminations shall be rated not less than 600 volts. The size and number of conductors and the number of cables shall be as indicated. Conductors larger than No. 8 AWG shall be stranded. Each circuit shall be identified by means of fiber or nonferrous metal tags, or approved equal, in each junction box, and at each terminal.

3.4.1 Splices

Splices below grade shall be made with nonpressure-filled resin systems using transparent, interlocking, self-venting, longitudinally split plastic

molds. Splices above grade shall be made with sealed insulated pressure connectors and shall provide insulation and jacket equal to that of the cable. In order to prevent moisture from entering the splice, jackets shall be cut back to expose the required length of insulation between the jacket and the tapered end of the insulation.

3.5 CONNECTIONS TO BUILDINGS

Cables shall be extended into the various buildings as indicated and shall be properly connected to the indicated equipment. Empty conduits to the indicated equipment from a point 1.5 m outside the building wall and 600 mm below finished grade are specified in Section 16415 ELECTRICAL WORK, INTERIOR shall be provided. After installation of cables, conduits shall be sealed to prevent moisture or gases from entering the building.

3.6 POLE INSTALLATION

Pole lengths shall provide a luminaire mounting height of 7 m (25 feet). The mount interfaces shall have ac power connected, and the pole wiring harness shall be connected to the luminaire. Pole installation shall conform to the manufacturer's recommendations, NFPA 70, and ANSI C2. Poles shall be set straight and plumb.

3.6.1 Pole Brackets

Brackets shall be installed as specified by the manufacturer and as shown on drawings. Mounting hardware shall be sized appropriately to secure the mount, luminaire, and housing with wind and ice loading normally encountered at the site. Pole brackets for floodlights shall have the number of tenons indicated, arranged to provide the indicated spread between each tenon. Where indicated on drawings, adjustable heads shall be installed on the brackets to position the luminaires. Identical brackets shall be used with one type of luminaire.

3.6.2 Concrete Foundations

Concrete foundations shall have anchor bolts accurately set in the foundation using a template supplied by the pole manufacturer. Once the concrete has cured, the pole shall be set on the foundation, leveled on the foundation bolts, and secured with the holding nuts. The space between the foundation and the pole base shall be grouted. Concrete and grout work shall conform to Section 03300 CONCRETE FOR BUILDING CONSTRUCTION. Concrete shall be 21 MPa (3000 psi) at 28 days.

3.6.3 Rigid Steel Conduit Ells

Rigid steel conduit ells shall be provided for all poles.

3.6.4 Aluminum Installation

Poles shall be mounted on cast-in-place or power-installed screw foundations. Concrete poles shall be embedded in accordance with the details shown. Conduit elbows for power and future CCTV shall be provided for cable entrances into pole interiors.

3.6.4.1 Cast-In-Place Foundations

Concrete foundations, sized as indicated, shall have anchor bolts accurately set in foundations using templates supplied by the pole

manufacturer. Concrete work and grouting is specified in Section 03300 CONCRETE FOR BUILDING CONSTRUCTION. After the concrete has cured, pole anchor bases shall be set on foundations and leveled by shimming between anchor bases and foundations or by setting anchor bases on leveling nuts and grouting. Poles shall be set plumb. Anchor bolts shall be the manufactures standard, and not less than necessary to meet the pole wind loading and other specified design requirements.

3.7 LIGHTING

3.7.1 Lamps

Lamps of the proper type, wattage, and voltage rating shall be delivered to the project in the original containers and installed in the fixtures just before completion of the project.

3.7.2 Fixture Installation

Standard fixtures shall be installed as detailed on Standard Detail No. 04-06-04, Sheet Nos. 51 and 60, which accompany and form a part of this specification. Special fixtures shall be as indicated on drawings. Illustrations shown on these sheets or on the drawings are indicative of the general type desired and are not intended to restrict selection of fixtures to any particular manufacturer. Fixtures of similar design, equivalent light-distribution and brightness characteristics, and equal finish and quality will be acceptable as approved.

3.7.2.1 Accessories

Accessories such as straps, mounting plates, nipples, or brackets shall be installed as required for proper installation.

3.7.2.2 In-Line Fuses

An in-line fuse shall be provided for each fixture.

3.7.2.3 Special Fixtures

The types of special fixtures are designated by letters and numbers. For example, SP-1 denotes special type 1.

3.8 LIGHTING CONTROL SYSTEM

3.9 Time Control Switches

Switches shall be installed with not less than four 6.4 mm (1/4 inch) bolts. The use of sheet metal screws will not be allowed.

3.10 GROUNDING

Grounding shall be in conformance with NFPA 70, the contract drawings, and the following. Grounding conductors shall be soft-drawn, stranded copper. Ground rods shall be driven into the earth so that after the installation is complete, the top of the ground rod will be approximately 300 mm below finished grade, except in handholes.

3.10.1 Ground Rods and Pole Butt Electrodes

The resistance to ground shall be measured using the fall-of-potential

method described in IEEE Std 81. The maximum resistance of a driven ground rod shall not exceed 25 ohms under normally dry conditions. Whenever the required ground resistance is not met, additional electrodes shall be provided interconnected with grounding conductors, to achieve the specified ground resistance. The additional electrodes shall be a single extension-type rod, 19.1 mm (3/4 inch) diameter, up to 9.1 m (30 feet) long, driven perpendicular to grade, coupled and driven with the first rod. In high ground resistance, UL listed chemically charged ground rods may be used. If the resultant resistance exceeds 25 ohms measured not less than 48 hours after rainfall, the Contracting Officer shall be notified immediately. Connections below grade shall be fusion welded. Connections above grade shall be fusion welded or shall use UL 467 approved connectors.

3.10.2 Items to be Grounded

Ground conductors, metallic conduits, junction boxes, and noncurrent-carrying metallic parts of equipment shall be grounded. Connections above grade shall be made with solderless connectors, and those below grade shall be made by a fusion-welding process.

3.10.3 Lighting Pole

One ground rod shall be provided at each pole. Bases of metal or concrete lighting poles shall be connected to ground rods by means of No. 8 AWG bare copper wire.

3.11 TESTS

3.11.1 Testing For CCTV Assessment Lighting

The Contractor shall perform site testing and adjustment of the completed CCTV lighting. The Contractor shall provide personnel, equipment, instrumentation, and supplies necessary to perform testing. Written notification of planned testing shall be given to the Government at least 14 days prior to the test; notice shall not be given until after the Contractor has received written approval of the specific test procedures. Test procedures shall explain, in detail, step-by-step actions and expected results demonstrating compliance with the requirements of the specification. Test reports shall be used to document results of the tests. Reports shall be delivered to the Government within 7 days after completion of each test.

3.11.2 Operating Test

After the installation is completed and at such time as the Contracting Officer may direct, the Contractor shall conduct an operating test for approval. The equipment shall be demonstrated to operate in accordance with the requirements specified. The test shall be performed in the presence of the Contracting Officer. The Contractor shall furnish instruments and personnel required for the test, and the Government will furnish the necessary electric power.

3.11.3 Ground Resistance Measurements

The resistance to ground shall be measured by the fall-of-potential method described in IEEE Std 81.

The contractor shall maintain a separate set of drawings, elementary diagrams and wiring diagrams of the lighting to be used for "as-built"

drawings. This set shall be accurately kept up to date by the Contractor with all changes and additions to the lighting system. In addition to being complete and accurate, this set of drawings shall be kept neat and shall not be used for installation purposes. Upon completion of the as-built drawings, a representative of the Government will review the as-built work with the Contractor. If the as-built work is not complete, the Contractor will be so advised and shall complete the work as required.

-- End of Section --

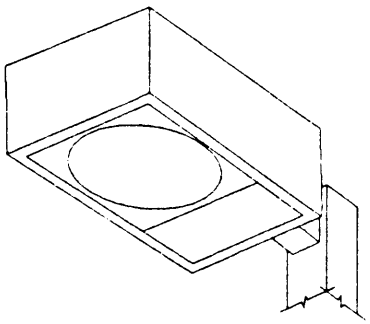

TYPE 401

Enclosed, Integrally Ballasted, Rectangular Shaped,
Side Mounted, High Intensity Discharge Lighting Fixture

First Suffix	Second Suffix	Description
~~A~~		~~Rated for mercury vapor lamp~~
~~B~~		~~Rated for metal halide lamp~~
C		Rated for high pressure sodium lamp
	~~1~~	~~IES type II medium light distribution~~
	2	IES type III medium light distribution
	~~3~~	~~IES type V medium light distribution.~~

Fixture shall conform to UL 1572. Fixture housing shall have sides and doorframe of one-piece extruded aluminum with welded joints and top of crowned sheet aluminum. The top shall be spot welded and sealed watertight. The housing shall be rigidly attached to a square shaped mounting arm of extruded aluminum. The fixture door shall have a flat heat and impact resistant lens of 3/16-inch nominal, tempered glass, and shall be hinged and held in place with captive screws of the same finish as the door. The lens and door shall enclose the lamp compartment. The reflector shall be aluminum of the manufacturer's standard commercial product finish suitable for the lamp type and rating. The ballast shall be of the high power factor type. The ballast and power components shall be mounted on a single bracket and shall be removable. The fixture, including the mounting arm, shall be gasketed to allow air movement but prevent the entry of dust and insects. Ballast shall be of the constant wattage autotransformer type for mercury vapor lamps, lead-peak autotransformer type for metal halide lamps, and regulating type for high pressure sodium lamps. Ballast shall be capable of starting and operating the lamp at ambient temperatures ranging from minus 20 degrees F to 105 degrees F. A square extruded aluminum pole including anchor type base, anchor bolts and mounting hardware shall be provided by the fixture manufacturer and shall be the manufacturer's standard commercial product for the number of fixtures and wind load indicated or specified. The fixture housing mounting arm shall have a dark duranodic bronze finish. The fixture shall be prewired and shall have a mogul base glazed porcelain lampholder.

Fixture type indicated on this sheet shall also conform to requirements specified and indicated in the contract documents.

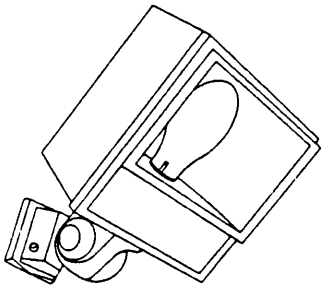

TYPE 506
Wall Bracket Mounting

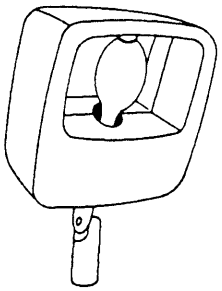

TYPE 507
Slip Fitter Mounting

High Intensity Discharge Floodlight with Asymmetrical Light Distribution

First Suffix	Second Suffix	Third Suffix	Description
A			Rated for metal halide lamp
B			Rated for high pressure sodium (HPS) lamp
	1		NEMA type 6 x 5 light distribution
	~~2~~		~~NEMA type 7 x 7 light distribution~~
	~~3~~		~~NEMA type 7 x 6 light distribution~~
		~~A~~	~~Fixture with instant restrike feature~~
		~~B~~	~~Type 300 emergency unit~~

Fixture shall conform to UL 1572 and NEMA FA 1, and shall be the heavy-duty, enclosed type. Fixture shall consist of a cast aluminum housing and a cast aluminum door assembly and shall be integrally ballasted unless otherwise shown or approved. The door assembly shall be hinged and gasketed and held in a closed position with screws of finish to match fixture or recessed stainless steel latches. The lens shall be thermal shock and impact resistant tempered glass and shall be held securely in the door frame. Reflector shall be aluminum with manufacturer's standard commercial product finish suitable for light source provided. All metallic parts of the fixture shall receive one or more rust-inhibitive coatings prior to the application of interior and exterior finishes in accordance with the standard practice of the manufacturer for commercially available exterior lighting fixtures. Ballast shall be of the high power factor type capable of starting and operating the lamp in an ambient temperature of minus 20 degrees F to 105 degrees F. Ballast shall be of the lead-peak autotransformer type for metal halide lamps and the regulating type for high pressure sodium lamps. If an instant restrike feature is specified, the fixture shall be equipped to permit restarting of the lamp to full lumen output within 5 seconds following restoration of power after each momentary power interruption. The fixture shall be prewired and shall include a mogul base glazed porcelain lampholder. Mounting hardware for the fixture shall be adjustable, and shall be the cast aluminum type unless otherwise approved.

Fixture types indicated on this sheet shall also conform to requirements specified and indicated in the contract documents.

SECTION 16610

UNINTERRUPTIBLE POWER SUPPLY (UPS)

PART 1 GENERAL

1.1 REFERENCES

The publications listed below form a part of this specification to the extent referenced. The publications are referred to in the text by basic designation only.

INSTITUTE OF ELECTRICAL AND ELECTRONICS ENGINEERS (IEEE)

IEEE C62.41	(1991) Surge Voltages in Low-Voltage AC Power Circuits
IEEE Std 485	(1983) Recommended Practice for Sizing Large Lead Storage Batteries for Generating Stations and Substations

NATIONAL FIRE PROTECTION ASSOCIATION (NFPA)

NFPA 70	(1996; Errata) National Electrical Code

1.2 SYSTEM DESCRIPTION

The UPS system shall consist of UPS module, battery system, battery protective device, system cabinet, static bypass transfer switch, controls and monitoring. Input ac power shall be connected to the normal source ac input of the UPS module. The battery shall be connected to the dc input of the UPS module through the battery protective device. The ac output of the UPS system shall be connected to the critical loads.

1.2.1 UPS Module and Battery System

UPS module shall contain required rectifier/charger unit, inverter unit and controls, battery protective device, and any other specified equipment/devices. Battery system shall contain the battery cells, racks, battery disconnect, battery monitor and cabinet, if required.

1.2.2 Design Requirements

1.2.2.1 Parts and Materials

Parts and materials comprising the UPS system shall be new, of current manufacture, of a high grade and free of defects and imperfections, and shall not have been in prior service except as required during aging and factory testing.

1.2.2.2 Components

Active electronic devices shall be solid state. Semiconductor devices shall be sealed. Relays shall be dust-tight.

1.2.2.3 Semiconductor Fusing

Power semiconductors shall be fused to prevent cascaded or sequential semiconductor failures. Indicator lamp denoting blown fuse conditions shall be readily observable by the operator without removing panels or opening cabinet doors.

1.2.2.4 Control Power

Control power shall be derived from two sources, input and output, with automatic selective control. The control power circuit shall have suitable protection, appropriately marked and located in the immediate vicinity of the input protective device.

1.2.2.5 EMI/RFI Protection

The components and the system shall be designed to minimize the emission of electromagnetic waves that may cause interference with other equipment.

1.2.2.6 Wiring

Wiring practices, materials, and coding shall be in accordance with the requirements of NFPA 70 and other applicable standards. Wire runs shall be protected in a manner which separates power and control wiring. Control wiring shall be minimum No. 16 AWG extra-flexible stranded copper. Logic-circuit wiring may be smaller. Ribbon cables shall be minimum No. 22 AWG. Control wiring shall have permanently attached wire numbers.

1.2.2.7 Cabinet Finish, Rack Mounted

Equipment cabinet shall be cleaned, primed and painted in the manufacturer's standard colors, in accordance with accepted industry standards.

1.2.2.8 Safety

UPS shall be equipped with instruction plates including warnings and cautions, suitably located, describing any special or important procedures to be followed in operating and servicing the equipment.

1.2.3 Performance Requirements

1.2.3.1 Normal Operation

The UPS module rectifier/charger shall convert the incoming ac input power to dc power for the inverter and for float charging the battery. The inverter shall supply ac power continuously. Inverter output shall be synchronized with the bypass ac power source, provided that the bypass ac power source is within the specified frequency range. The UPS system shall supply ac power to the critical loads.

1.2.3.2 Loss of ac Input Power

The battery shall supply dc power to the inverter so that there is no interruption of ac power to the critical load whenever the ac input power source deviates from the specified tolerances or fails completely. The battery shall continue to supply power to the inverter for the specified protection time. At the same time, an alarm shall sound to alert operating personnel, allowing startup of a secondary power source or orderly shutdown of the critical load.

1.2.3.3 Return of ac Input Power Source

The rectifier/charger shall start and assume the dc load from the battery when the ac input power source returns. The rectifier/charger shall then simultaneously supply the inverter with dc power and recharge the battery. This shall be an automatic function and shall cause no disturbance to the critical load.

1.2.3.4 Failure of ac Input Power to Return

Should the ac input power fail to return before the battery voltage reaches the discharge limit, the UPS system shall disconnect from the critical load to safeguard the battery.

1.3 SUBMITTALS

Government approval is required for submittals with a "GA" designation; submittals having an "FIO" designation are for information only. The following shall be submitted in accordance with Section 01330 SUBMITTAL PROCEDURES:

SD-01 Data

UPS System Performance Data Sheets; GA|ED.

Pertinent performance data for the UPS system, using a copy of the data sheets supplied with this specification. Data sheets shall be certified by a responsible officer of the UPS manufacturer.

SD-04 Drawings

UPS System; FIO;AR.

Detail drawings consisting of a complete list of equipment and materials, manufacturer's descriptive and technical literature, battery sizing calculations per IEEE Std 485, installation instructions, single-line diagrams, ladder-type schematic diagrams, elevations, layout drawings, and details required to demonstrate that the system has been coordinated and will function properly as a unit.

SD-09 Reports

Field Tests; FIO;AR.

A detailed description of proposed field test procedures, including proposed dates and steps outlining each test, how it is to be performed, what it accomplishes, and its duration, not later than 1 week prior to the date of each test.

Field test reports in booklet form tabulating field tests and measurements performed, upon completion and testing of the installed system. Field test reports shall be signed by an official authorized to certify on behalf of the manufacturer of the UPS system that the system meets specified requirements. The reports shall be dated after the award of this contract, shall state the Contractor's name and address, shall name the project and location, and shall list the specific requirements which are being certified.

1.4 QUALITY ASSURANCE

1.4.1 Reliability

UPS shall have a minimum acceptable system Mean Time Between Failures (MTBF) of 10,000 hours. A failure is defined as any interruption to or degradation of the UPS output. Automatic switching to bypass due to a problem with the UPS system does not constitute a failure, provided that the critical load is not disturbed.

1.5 DELIVERY AND STORAGE

Equipment placed in storage shall be protected from humidity and temperature variations, dirt, dust, or other contaminants.

1.6 PROJECT/SITE CONDITIONS

1.6.1 Environmental Conditions

The UPS and battery system shall be capable of withstanding any combination of the following external environmental conditions without mechanical or electrical damage or degradation of operating characteristics.

a. Operating altitude: Sea level to 1,200 meters (4,000 ft.) (Systems applied at higher altitudes shall be derated in accordance with the manufacturer's instructions).

b. Operating ambient temperature range: 0 to 40 degrees C.

c. Non-operating and storage ambient temperature range: Minus 20 to plus 60 degrees C.

d. Operating relative humidity: 0 to 95 percent, without condensation.

1.6.2 Sound Pressure Levels

Sound pressure levels produced by the UPS, when operating under full rated load, at a distance of 1.5 meters in any direction from the perimeter of the unit, shall not exceed 40 dB as measured on the A scale of a standard sound level meter at slow response.

1.6.3 Verification of Dimensions

The Contractor shall become familiar with details of the work, verify dimensions in the field, and shall advise the Contracting Officer of any discrepancy before performing the work.

1.7 NAME PLATES

Each major item of equipment shall have the manufacturer's name, address, type or style, model or serial number, and catalog number on a plate secured to the item of equipment.

1.8 OPERATION AND MAINTENANCE MANUALS

Six complete copies of operation manuals for the UPS System outlining the step-by-step procedures required for system startup, operation and shutdown shall be provided. The instructions shall include the manufacturer's name,

equipment model number, service manual, parts list, and brief description of equipment and its basic operational features. Six complete copies of maintenance manuals listing routine maintenance procedures, possible breakdowns and repairs, and troubleshooting guides shall be provided. Corrective maintenance procedures shall identify the most probable failures and the appropriate repairs. Test measurement levels shall be referenced to specific test points on the installed equipment. Operation and maintenance manuals may be either combined or separate.

PART 2 PRODUCTS

2.1 STANDARD PRODUCTS

Materials and equipment shall be the standard products of a manufacturer regularly engaged in the manufacture of such products and shall essentially duplicate items that have been in satisfactory use for at least 2 years prior to bid opening. Equipment shall be supported by a service organization that is, in the opinion of the Contracting Officer, reasonably convenient to the site.

2.2 LOAD PROFILE

The UPS system shall be compatible with the load characteristics defined in the LOAD PROFILE TABLE below and load configuration shown. Compensation for UPS/load interaction problems resulting from nonlinear loads or transformer and motor inrush shall be provided.

LOAD PROFILE TABLE

Type of load: CCTV.

Size of load: Approximately 0.5kW.

2.3 UPS SYSTEM RATINGS

Unless stated otherwise, the parameters listed are under full output load at 0.7 power factor, with batteries fully charged and floating on the dc bus and with nominal input voltage.

2.3.1 System Capacity

Overall 2.1 kVA, 1.5 kW, at 40 degrees C.

2.3.2 Battery Capacity

Discharge time to end voltage: 10 minutes, at 25 degrees C. Battery shall be capable of delivering 125 percent of full rated UPS load at initial start-up.

2.3.3 ac Input

a. Voltage 120 volts line-to-line.

b. Number of phases: 1-phase, 23wire, plus ground.

c. Voltage Range: Plus 10 percent, minus 15 percent, without affecting battery float voltage or output voltage.

d. Frequency: 60 Hz, plus or minus 5 percent.

e. Total harmonic current distortion (THD) reflected into the primary line: 10 percent maximum.

2.3.4 ac Output

a. Voltage 120 volts line-to-neutral.

b. Number of phases: 1-phase, 24wire, plus ground.

c. Voltage regulation:

(1) Balanced load: Plus or minus 4 percent.

(2) No-load voltage modulation: Plus or minus 4 percent.

d. Frequency: 60 Hz.

e. Frequency regulation: Plus or minus 2 percent.

f. Frequency drift: Plus or minus 2 percent over any 24 hour interval (or length of test) at stated ambient conditions when on internal oscillator.

g. Harmonic content (RMS voltage): Voltage THD shall be less than 7 percent with up to 50 percent nonlinear load and a crest factor of less than 3 to 1.

h. Load power factor operating range: 1.0 to 0.8 lagging.

i. Wave-form deviation factor: 5 percent at no load.

j. Overload capability (at full voltage) (excluding battery):

(1) 120 percent load for 1 second.

(2) 200 percent load for 10 cycles.

(3) 300 percent load for sub cycle.

2.4 UPS MODULE

2.4.1 General Description

UPS module shall consist of a rectifier/charger unit and a 1-phase inverter unit with their associated synchronizing equipment, protective devices and accessories as required for operation.

2.4.2 Rectifier/Charger Unit

Rectifier/charger unit shall be solid state and shall provide direct current to the dc bus.

2.4.2.1 Input Protective Device

Rectifier/charger unit shall be provided with an input protective device. The protective device shall be sized to accept simultaneously the full-rated load and the battery recharge current. The protective device shall have provision for locking in the "off" position. A surge

suppression device shall be installed at the UPS input to protect against lightning and switching surges.

2.4.2.2 Sizing

Rectifier/charger unit shall be sized for the following two simultaneous operating conditions:

a. Supplying the full rated load current to the inverter.

b. Recharging a fully-discharged battery to 95 percent of rated ampere-hour capacity within 4 hours.

2.4.2.3 Battery Charging Current

a. Primary current limiting: Battery-charging current shall be voltage regulated and current limited. After the battery is recharged, the rectifier/charger unit shall maintain the battery at full float charge until the next operation under input power failure. Battery charger shall be capable of providing equalizing charge to the battery.

2.4.3 Inverter Unit

Inverter unit shall be a solid-state device capable of accepting power from the dc bus and providing ac power within specified limits.

2.4.3.1 Output Overload

The inverter shall be able to sustain an overload as specified across its output terminals. The inverter shall not shut off, but shall continue to operate within rated parameters, with inverse-time overload shutdown protection.

2.4.4 External Protection

UPS module shall have built-in self-protection against undervoltage, overvoltage, overcurrent and surges introduced on the ac input source and/or the bypass source. The UPS system shall sustain input surges without damage in accordance with IEEE C62.41. The UPS shall also have built-in self-protection against overvoltage and voltage surges introduced at the output terminals by paralleled sources, load switching, or circuit breaker operation in the critical load distribution system.

2.4.5 Internal Protection

UPS module shall be self-protected against overcurrent, sudden changes in output load and short circuits at the output terminals. UPS module shall be provided with output reverse power detection which shall cause that module to be disconnected from the critical load bus when output reverse power is present. UPS module shall have built-in protection against permanent damage to itself and the connected load for predictable types of failure within itself and the connected load. At the end of battery discharge limit, the module shall shut down without damage to internal components.

2.5 BATTERY SYSTEM

2.5.1 General

A storage battery with sufficient ampere-hour rating to maintain UPS output at full capacity for the specified duration shall be provided for each UPS module. The battery shall be of heavy-duty, industrial design suitable for UPS service. The cells shall be provided with flame arrestor vents, intercell connectors and cables, and terminal grease. Intercell connectors shall be sized to maintain terminal voltage within voltage window limits when supplying full load under power failure conditions. Cell and connector hardware shall be stainless steel of a type capable of resisting corrosion from the electrolyte used.

2.5.2 Battery Construction

The battery shall be of the valve-regulated, sealed, non-gassing, recombinant type.

PART 3 EXECUTION

3.1 INSTALLATION

The UPS system shall be set in place, wired and connected in accordance with the approved shop drawings and manufacturer's instructions.

3.2 STARTUP AND TESTING

3.2.1 Field Tests

As a minimum, the startup and field test procedures shall include the following:

a. Ensure that shipping members have been removed.

b. Check for damage (dents, scratches, frame misalignment, damage to panel devices, etc).

c. Ensure that interiors are free of foreign materials, tools and dirt.

d. Check and test each protective device for proper mechanical and electrical operation.

e. Check protective device overcurrent trip settings.

fk Check and test indicating lights for proper operation and color.

g. Perform onsite field test procedures.

h. Demonstrate to the Government that the specified functions and interlocks have been implemented.

3.2.2 Load Test

The installed system shall be load tested for a continuous 24 hour period by means of resistive load banks. The system shall be continuously tested full load for 8 hours. Instrument readings shall be recorded every half hour for the following:

a. Input voltage.

b. Input current.

c. Output voltage.

d. Output current.

3.3 POSTING FRAMED DATA AND INSTRUCTIONS

Framed data and instructions containing wiring and control diagrams under glass or in laminated plastic shall be posted where directed. Condensed operating instructions, prepared in typed form, shall be framed as specified above and posted beside the diagrams. The framed instructions shall be posted before acceptance testing of the system.

-- End of Section --

SECTION 16670

LIGHTNING PROTECTION SYSTEM

PART 1 GENERAL

1.1 REFERENCES

The publications listed below form a part of this specification to the extent referenced. The publications are referred to in the text by basic designation only.

AMERICAN NATIONAL STANDARDS INSTITUTE (ANSI)

ANSI C135.30	(1988) Zinc-Coated Ferrous Ground Rods for Overhead or Underground Line Construction

NATIONAL FIRE PROTECTION ASSOCIATION (NFPA)

NFPA 70	(1990) National Electrical Code
NFPA 780	(1992) Lightning Protection Code

UNDERWRITERS LABORATORIES (UL)

UL-03	(1992) Electrical Construction Materials Directory
UL 96	(1985; Rev thru Dec 1988) Lightning Protection Components
UL 96A	(1982; Rev thru Jul 1990) Installation Requirements for Lightning Protection Systems
UL 467	(1984; Rev thru Nov 1986) Grounding and Bonding Equipment
UL 486A	(1991; R Oct 91) Wire Connectors and Soldering Lugs for Use with Copper Conductors

1.2 GENERAL REQUIREMENTS

1.2.1 Verification of Dimensions

The Contractor shall become familiar with all details of the work, verify all dimensions in the field, and shall advise the Contracting Officer of any discrepancy before performing the work. No departures shall be made without the prior approval of the Contracting Officer.

1.2.2 System Requirements

The system furnished under this specification shall consist of the standard products of a manufacturer regularly engaged in the production of lightning protection systems and shall be the manufacturer's latest UL approved

design. The lightning protection system shall conform to NFPA 70 and NFPA 780, UL 96 and UL 96A, except where requirements in excess thereof are specified herein.

1.3 SUBMITTALS

Government approval is required for submittals with a "GA" designation; submittals having an "FIO" designation are for information only. The following shall be submitted in accordance with Section 01330 SUBMITTAL PROCEDURES:

SD-04 Drawings

Lightning Protection System; GA|ED.

Detail drawings consisting of a complete list of material, including manufacturer's descriptive and technical literature, catalog cuts, drawings, and installation instructions. Detail drawings shall demonstrate that the system has been coordinated and will function as a unit. Drawings shall show proposed layout and mounting and relationship to other parts of the work.

SD-13 Certificates

Materials and Equipment; GA|ED.

Where material or equipment is specified to comply with requirements of UL, proof of such compliance. The label of or listing in UL-03 will be acceptable evidence. In lieu of the label or listing, a written certificate from an approved nationally recognized testing organization equipped to perform such services, stating that the items have been tested and conform to the requirements and testing methods of Underwriters Laboratories may be submitted.

PART 2 PRODUCTS

2.1 MATERIALS

2.1.1 General Requirements

No combination of materials shall be used that form an electrolytic couple of such nature that corrosion is accelerated in the presence of moisture unless moisture is permanently excluded from the junction of such metals. Where unusual conditions exist which would cause corrosion of conductors, conductors with protective coatings or oversize conductors shall be used. Where a mechanical hazard is involved, the conductor size shall be increased to compensate for the hazard or the conductors shall be protected by covering them with molding or tubing made of wood or nonmagnetic material. When metallic conduit or tubing is used, the conductor shall be electrically connected at the upper and lower ends.

2.1.2 Main and Secondary Conductors

Conductors shall be in accordance with NFPA 780 and UL 96 for Class I, Class II, or Class II modified materials as applicable.

2.1.2.1 Copper

Copper conductors used on nonmetallic stacks shall weigh not less than 170

kg per 300 m (375 pounds per thousand feet), and the size of any wire in the cable shall be not less than No. 15 AWG. The thickness of any web or ribbon used on stacks shall be not less than No. 12 AWG. Counterpoise shall be copper conductors not smaller than No. 1/0 AWG.

2.1.2.2 Aluminum

Aluminum shall not contact the earth nor shall it be used in any other manner that will contribute to rapid deterioration of the metal. Appropriate precautions shall be observed at connections with dissimilar metals. Aluminum conductors for bonding and interconnecting metallic bodies to the main cable shall be at least equivalent to strength and cross-sectional area of a No. 4 AWG aluminum wire. If perforated strips are used, the strips shall be as much wider than solid strips, as the diameter of the perforations. Aluminum strip for connecting exposed water pipes shall be not less than No. 12 AWG in thickness and at least 38.1 mm wide.

2.1.3 Air Terminals

Terminals shall be in accordance with UL 96 and NFPA 780. The tip of air terminals on buildings used for manufacturing, processing, handling, or storing explosives, ammunition, or explosive ingredients shall be a minimum of 600 mm above the ridge parapet, ventilator or perimeter. On open or hooded vents emitting explosive dusts or vapors under natural or forced draft, air terminals shall be a minimum of 1.5 m above the opening. On open stacks emitting explosive dusts, gases, or vapor under forced draft, air terminals shall extend a minimum of 4.5 m above vent opening. Air terminals more than 600 mm in length shall be supported by a suitable brace, with guides, not less than one-half the height of the terminal.

2.1.4 Ground Rods

Rods made of copper-clad steel shall conform to UL 467 and galvanized ferrous rods shall conform to ANSI C135.30. Ground rods shall be not less than 19.1 mm (3/4 inch) in diameter and 3.048 m (10 feet) in length. Ground rods of copper-clad steel, stainless steel, galvanized ferrous, and solid copper shall not be mixed on the job.

2.1.5 Clamp-Type Connectors

Connectors for splicing conductors shall conform to UL 96, class as applicable, and UL 486A, Class 2, style and size as required for the installation.

2.1.6 Lightning Protection Components

Lightning protection components, such as bonding plates, air terminal supports, chimney bands, clips, and fasteners shall conform to UL 96, classes as applicable.

PART 3 EXECUTION

3.1 INTEGRAL SYSTEM

3.1.1 General Requirements

The lightning protection system shall consist of air terminals, roof conductors, ground connections, and grounds, electrically interconnected to

form the shortest distance to ground. All conductors on the structures shall be exposed except where conductors are in protective sleeves exposed on the outside walls. Secondary conductors shall interconnect with grounded metallic parts within the building. Interconnections made within side-flash distances shall be at or above the level of the grounded metallic parts.

3.1.1.1 Air Terminals

Air terminal design and support shall be in accordance with NFPA 780. Terminals shall be rigidly connected to, and made electrically continuous with, roof conductors by means of pressure connectors or crimped joints of T-shaped malleable metal and connected to the air terminal by a dowel or threaded fitting. Air terminals at the ends of the structure shall be set not more than 600 mm (2 feet) from the ends of the ridge or edges and corners of roofs. Spacing of air terminals 600 mm (2 feet) in height on ridges, parapets, and around the perimeter of buildings with flat roofs shall not exceed 7.5 meters. In specific instances where it is necessary to exceed this spacing, the specified height of air terminals shall be increased not less than 50 mm for each 300 mm of increase over 7.5 meters. On large, flat or gently sloping roofs, as defined in NFPA 780, air terminals shall be placed at points of the intersection of imaginary lines dividing the surface into rectangles having sides not exceeding 15 m in length. Air terminals shall be secured against overturning either by attachment to the object to be protected or by means of a substantial tripod or other braces permanently and rigidly attached to the building or structure. Metal projections and metal parts of buildings, smokestacks, and other metal objects that do not contain hazardous materials and that may be struck but not appreciably damaged by lightning, need not be provided with air terminals. However, these metal objects shall be bonded to the lightning conductor through a metal conductor of the same unit weight per length as the main conductor. Where metal ventilators are installed, air terminals shall be mounted thereon, where practicable. Any air terminal erected by necessity adjacent to a metal ventilator shall be bonded to the ventilator near the top and bottom thereof. Where nonmetallic spires, steeples, or ventilators are present, air terminals shall be mounted thereon or to the side. In addition, where spires or steeples project more than 3.0 mabove the building, the conductor between the air terminal and metal roof shall be continued to the nearest down conductor and securely connected thereto.

3.1.1.2 Roof Conductors

Roof conductors shall be connected directly to the roof or ridge roll. Sharp bends or turns in conductors shall be avoided. Necessary turns shall have a radius of not less than 200 mm. Conductors shall preserve a downward or horizontal course and shall be rigidly fastened every 900 mm along the roof and down the building to ground. Metal ventilators shall be rigidly connected to the roof conductor at three places. All connections shall be electrically continuous. Roof conductors shall be coursed along the contours of flat roofs, ridges, parapets, and edges; and where necessary, over flat surfaces, in such a way as to join each air terminal to all the rest. Roof conductors surrounding tank tops, decks, flat surfaces, and flat roofs shall be connected to form a closed loop.

3.1.1.3 Down Conductors

Building steel shall be used for down conductors. Steel shall be made electrically continuous by jumpers.

3.1.1.4 Interconnection of Metallic Parts

Metal doors, windows, and gutters shall be connected directly to the grounds using not smaller than No. 6 copper conductor, or equivalent. Conductors placed where there is probability of unusual wear, mechanical injury, or corrosion shall be of greater electrical capacity than would normally be used, or shall be protected. The ground connection to metal doors and windows shall be by means of mechanical ties under pressure, or equivalent.

3.1.1.5 Ground Connections

Ground connections comprising conductors from the structure to the building counterpoise shall securely connect the building steel and ground in a manner to ensure electrical continuity between the two. All connections shall be of the exothesmic weld except for water pipes. There shall be a ground connection for each down conductor. Metal water pipes and other large underground metallic objects shall be bonded together with all grounding mediums. Ground connections shall be protected from mechanical injury. In making ground connections, advantage shall be taken of all permanently moist places where practicable, although such places shall be avoided if the area is wet with waste water that contains chemical substances, especially those corrosive to metal.

3.1.1.6 Grounding Electrodes

A grounding electrode shall be provided and located as shown. A driven ground shall extend into the earth for a distance of not less than 3.0 meters. Ground rods shall be set not less than 900 mm, nor more than 2.5 m, from the structures foundation. The complete installation shall have a total resistance to ground of not more than 10 ohms. Ground rods shall be tested individually prior to connection to the system and the system as a whole shall be tested not less than 24 hours after rainfall. When the resistance of the complete installation exceeds the specified value, the Contracting Officer will be notified immediately. A counterpoise shall be 500 MCM copper cable or equivalent material having suitable resistance to corrosion and shall be laid around the perimeter of the structure in a trench not less than 600 mm deep at a distance not less than 900 mm nor more than 2.5 m from the nearest point of the structure. All connections between ground connectors and grounds or counterpoise, and between counterpoise and grounds shall be electrically continuous.

3.1.2 Metal Roofs

Wood-Frame, Wall-Bearing Masonry or Tile Structure with Metallic Roof and Nonmetallic Exterior Walls, or Reinforced Concrete Building with Metallic Roof: Metal roofs which are in the form of sections insulated from each other shall be made electrically continuous by bonding. Air terminals shall be connected to, and made electrically continuous with, the metal roof as well as the roof conductors. Ridge cables and roof conductors shall be bonded to the roof at the upper and lower edges of the roof and at intervals not to exceed 30 meters. Where the metal of the roof is in small sections, the air terminals shall have connections made to at least four of the sections. All connections shall have electrical continuity and have a surface contact of at least 1935 square millimeters (3 square inches).

3.1.3 Metal Roofs With Metal Walls

Wood-Frame Building With Metal Roof and Metal Exterior Walls: The metal roof and the metal walls shall be bonded and made electrically continuous and considered as one unit. The air terminals shall be connected to and made electrically continuous with the metal roof as well as the roof and down conductors. All connections shall have electrical continuity and have a surface contact of at least 1935 square millimeters (3 square inches).

3.1.4 Steel Frame Building

The steel framework shall be made electrically continuous. Electrical continuity may be provided by bolting, riveting, or welding steel frame, unless a specific method is noted on the drawings. The air terminals shall be connected to the structural steel framework at the ridge. Short runs of conductors shall be used as necessary to join air terminals to the metal framework so that proper placing of air terminals is maintained. Separate down conductors from air terminals to ground connections are not required. Where a grounded metal pipe water system enters the building, the structural steel framework and the water system shall be connected at the point of entrance by a ground connector. Connections to pipes shall be by means of ground clamps with lugs. Connections to structural framework shall be by means of welding. All connections between columns and ground connections shall be made at the bottom of the steel columns. Ground connections to grounding electrons or counterpoise shall be run from not less than one-half of all the columns distributed equally around the perimeter of the structure at intervals averaging not more than 18 meters.

3.1.5 Ramps

Lightning protection for covered ramps (connecting passageways) shall conform to the requirements for lightning protection systems for buildings of similar construction, as hereinbefore described. A down conductor and a driven ground shall be placed at one of the corners where the ramp connects to each building or structure. This down conductor and driven ground shall be connected to the counterpoise or nearest ground connection of the building or structure. Where buildings or structures and connecting ramps are clad with metal, the metal of the buildings or structures and metal of the ramp shall be connected in a manner to ensure electrical continuity, in order to avoid the possibility of a flash-over or spark due to a difference in potential.

3.2 INTERCONNECTION OF METAL BODIES

Metal bodies of conductance shall be protected if not within the zone of protection of an air terminal. All metal bodies of conductance having an area of 0.258 square meters (400 square inches)or greater or a volume of 0.0164 cubic meters (1000 cubic inches) or greater shall be bonded to the lightning protection system using main size conductors and a bonding plate having a surface contact area of not less than 1935.5 square millimeters (3 square inches). Provisions shall be made to guard against the corrosive effect of bonding dissimilar metals. Metal bodies of inductance shall be bonded at their closest point to the lightning protection system using secondary bonding conductors and fittings. A metal body that exceeds 1.5 m in any dimension, that is situated wholly within a building, and that does not at any point come within 1.8 m of a lightning conductor or metal connected thereto shall be independently grounded.

3.3 INSPECTION

The lightning protection system will be inspected by the Contracting

Officer to determine conformance with the requirements of this specification. No part of the system shall be concealed until so authorized by the Contracting Officer.

-- End of Section --

SECTION 16710

PREMISES DISTRIBUTION SYSTEM

PART 1 GENERAL

1.1 REFERENCES

The publications listed below form a part of this specification to the extent referenced. The publications are referred to in the text by basic designation only.

ELECTRONIC INDUSTRIES ASSOCIATION (EIA)

EIA ANSI/TIA/EIA-568-A	(1995) Commercial Building Telecommunications Cabling Standard
EIA ANSI/TIA/EIA-569	(1996) Commercial Building Standard for Telecommunications Pathways and Spaces
EIA ANSI/TIA/EIA-606	(1993) Administration Standard for the Telecommunications Infrastructure of Commercial Buildings
EIA ANSI/TIA/EIA-607	(1994) Commercial Building Grounding and Bonding Requirements for Telecommunications
EIA TSB 67	(1995) Transmission Performance Specifications for Field Testing of Unshielded Twisted Pair Cabling Systems

IBM PUBLICATION CORPORATION (IBM)

IBM GA27-3361-07	(1987) LAN Cabling System - Planning and Installation

INSULATED CABLE ENGINEERS ASSOCIATION (ICEA)

ICEA S-80-576	(1994) Communications Wire and Cable for Wiring of Premises
ICEA S-83-596	(1994) Fiber Optic Premises Distribution Cable

NATIONAL FIRE PROTECTION ASSOCIATION (NFPA)

NFPA 70	(1996; Errata) National Electrical Code

1.2 SYSTEM DESCRIPTION

The premises distribution system shall consist of inside-plant horizontal, riser, and backbone cables and connecting hardware to transport telephone and data (including LAN) signals between equipment items in a building.

1.3 ENVIRONMENTAL REQUIREMENTS

Connecting hardware shall be rated for operation under ambient conditions of 0 to 60 degrees C and in the range of 0 to 95 percent relative humidity, noncondensing.

1.4 QUALIFICATIONS

1.4.1 Minimum Contractor Qualifications

All work under this section shall be performed by and all equipment shall be furnished and installed by a certified Telecommunications Contractor, hereafter referred to as the Contractor. With the exception of furnishing and installing conduit, electrical boxes, and pullwires, this work shall not be done by the Electrical Contractor. The Contractor shall have the following qualifications in Telecommunications Systems installation:

a. Contractor shall have a minimum of 3 years experience in the application, installation and testing of the specified systems and equipment.

b. All supervisors and installers assigned to the installation of this system or any of its components shall have factory certification from each equipment manufacturer that they are qualified to install and test the provided products. General electrical trade staff (electricians) shall not be used for the installation of the premises distribution system cables and associated hardware.

c. All installers assigned to the installation of this system or any of its components shall have a minimum of 3 years experience in the installation of the specified copper and fiber optic cable and components.

1.4.2 Minimum Manufacturer Qualifications

The equipment and hardware provided under this contract will be from manufacturers that have a minimum of 3 years experience in producing the types of systems and equipment specified.

1.5 SUBMITTALS

Government approval is required for submittals with a "GA" designation; submittals having an "FIO" designation are for information only. The following shall be submitted in accordance with Section 01330 SUBMITTAL PROCEDURES:

SD-01 Data

Spare Parts; FIO;AR.

Lists of spare parts, tools, and test equipment for each different item of material and equipment specified, after approval of detail drawings, not later than 2 months prior to the date of beneficial occupancy. The data shall include a complete list of parts and supplies, with current unit prices and source of supply, and a list of spare parts recommended for stocking.

SD-04 Drawings

Premises Distribution System; GA|AR.

Detail drawings including a complete list of equipment and material. Detail drawings shall contain complete wiring and schematic diagrams and other details required to demonstrate that the system has been coordinated and will function properly as a system. Drawings shall include vertical riser diagrams, equipment rack details, elevation drawings of telecommunications closet walls, outlet face plate details for all outlet configurations, sizes and types of all cables, conduits, and cable trays. Drawings shall show proposed layout and anchorage of equipment and appurtenances, and equipment relationship to other parts of the work including clearance for maintenance and operation.

Record Drawings; GA|AR.

Record drawings for the installed wiring system infrastructure per EIA ANSI/TIA/EIA-606. The drawings shall show the location of all cable terminations and location and routing of all backbone and horizontal cables. The identifier for each termination and cable shall appear on the drawings.

SD-06 Instructions

Manufacturer's Recommendations; GA|AR.

Where installation procedures, or any part thereof, are required to be in accordance with the recommendations of the manufacturer of the material being installed, printed copies of these recommendations, prior to installation shall be provided. Installation of the item will not be allowed to proceed until the recommendations are received and approved.

SD-08 Statements

Test Plan; GA|AR.

Test plan defining the tests required to ensure that the system meets technical, operational and performance specifications, 60 days prior to the proposed test date. The test plan must be approved before the start of any testing. The test plan shall identify the capabilities and functions to be tested, and include detailed instructions for the setup and execution of each test and procedures for evaluation and documentation of the results.

Qualifications; GA|AR.

The qualifications of the Manufacturer, Contractor, and the Installer to perform the work specified herein. This shall include proof of the minimum qualifications specified herein.

SD-09 Reports

Test Reports; GA|AR.

Test reports in booklet form with witness signatures verifying execution of tests. Test results will also be provided on 89 mm diskettes in ASCII format. Reports shall show the field tests performed to verify compliance with the specified performance criteria. Test reports shall include record of the physical parameters verified during testing. Test reports shall be submitted within 7 days after completion of testing.

SD-13 Certificates

Premises Distribution System; GA|AR.

Written certification that the premises distribution system complies with the EIA ANSI/TIA/EIA-568-A, EIA ANSI/TIA/EIA-569, and EIA ANSI/TIA/EIA-606 standards.

Materials and Equipment; FIO;AR.

Where materials or equipment are specified to conform, be constructed or tested to meet specific requirements, certification that the items provided conform to such requirements. Certification by a nationally recognized testing laboratory that a representative sample has been tested to meet the requirements, or a published catalog specification statement to the effect that the item meets the referenced standard, will be acceptable as evidence that the item conforms. Compliance with these requirements does not relieve the Contractor from compliance with other requirements of the specifications.

Installers; GA|AR.

The Contractor shall submit certification that all the installers are factory certified to install and test the provided products.

SD-18 Records

Record Keeping and Documentation; Ref IdGA|AR.

Documentation on cables and termination hardware in accordance with EIA ANSI/TIA/EIA-606.

1.6 DELIVERY AND STORAGE

Equipment delivered and placed in storage shall be stored with protection from the weather, humidity and temperature variation, dirt and dust or other contaminants.

1.7 OPERATION AND MAINTENANCE MANUALS

Commercial off the shelf manuals shall be furnished for operation, installation, configuration, and maintenance for all products provided as a part of the premises distribution system. Specification sheets for all cable, connectors, and other equipment shall be provided.

1.8 RECORD KEEPING AND DOCUMENTATION

1.8.1 Cables

A record of all installed cable shall be provided [in hard copy format] and on electronic media using Windows based computer cable management software per EIA ANSI/TIA/EIA-606. The cable records shall include only the required data fields per EIA ANSI/TIA/EIA-606.

1.8.2 Termination Hardware

A record of all installed patch panels and outlets shall be provided in hard copy format and on electronic media using Windows based computer cable management software per EIA ANSI/TIA/EIA-606. The hardware records shall include only the required data fields per EIA ANSI/TIA/EIA-606.

PART 2 PRODUCTS

2.1 MATERIALS AND EQUIPMENT

Materials and equipment shall be the standard products of a manufacturer regularly engaged in the manufacture of the products and shall be the manufacturer's latest standard design that has been in satisfactory use for at least 1 year prior to installation. Materials and equipment shall conform to the respective publications and other requirements specified below and to the applicable requirements of NFPA 70.

2.2 UNSHIELDED TWISTED PAIR CABLE SYSTEM

2.2.1 Cable Insulation

For each individual Category 5 cable, the insulation, material used on each pair shall be exactly the same in all physical, electrical, and chemical respects. The use of Teflon insulated, plenum rated Category 5 cable is acceptable for both plenum and non-plenum applications. If Teflon insulated plenum rated cable is used by the Contractor, it shall be Type 4x0, where all four pairs are Teflon insulated. Type 3x1 and 2x2 are not acceptable.

2.2.2 Riser Cable

Riser cable shall meet the requirements of ICEA S-80-576 and EIA ANSI/TIA/EIA-568-A for Category 3 100-ohm unshielded twisted pair cable. Cable shall be label-verified. Cable jacket shall be factory marked at regular intervals indicating verifying organization and performance level. Conductors shall be solid untinned copper 24 AWG . Cable shall be rated CMR per NFPA 70.

2.2.3 Horizontal Cable

Horizontal cable shall meet the requirements of EIA ANSI/TIA/EIA-568-A for Category 5 horizontal cable. Cable shall be label-verified. Cable jacket shall be factory marked at regular intervals indicating verifying organization and performance level. Conductors shall be solid untinned copper 24 AWG. Cable shall be rated CMP per NFPA 70.

2.2.4 Connecting Hardware

Connecting and cross-connecting hardware shall be the same category as the cable it serves. Hardware shall be in accordance with and EIA ANSI/TIA/EIA-568-A.

2.2.4.1 Telecommunications Outlets

Wall and desk outlet plates shall come equipped with four modular jacks, with the top or left jacks labeled "voice" and the bottom or right jacks labeled "data". Modular jacks shall be the same category as the cable they terminate and shall meet the requirements of EIA ANSI/TIA/EIA-568-A. Modular jack pin/pair configuration shall be [T568A] per EIA ANSI/TIA/EIA-568-A. Modular jacks shall be [unkeyed] . Faceplates shall be provided and shall be ivory in color, impact resistant plastic Outlet assemblies used in the premises distribution system shall consist of modular jacks assembled into simplex , duplex and quad outlet assemblies in single or double gang covers as indicated on the drawings. The modular

jacks shall conform to the requirements of EIA ANSI/TIA/EIA-568-A, Category 5 .

2.2.4.2 Raised Floor Telecommunications Outlet

Raised floor outlets shall be designed for flush mounting to the raised floor tiles with an access door for the connectors. A small strain relief door shall provide cable access to the connectors when the main access door is closed. The outlet box shall attach to the floor tile with no more than 4 screws and such that it is removable from the floor tile with cables attached. Cables shall be attached to the ends of the box to allow removal and separation of the box from the floor tile with cable/flex conduit still attached. Flush mounted access floor workstation modules shall contain telecommunication outlets consisting of a 8 pin modular connectors, with two jacks labeled "voice" and the other two jacks labeled "data" and two fiber optic ST type connectors and duplex electrical outlets with appropriate face plates as indicated on the drawings. The floor modules shall have appropriate separators in the box to provide two separate compartments (telecommunications, power). Jacks shall conform to CFR 47 Part 68 and NFPA 70 and EIA ANSI/TIA/EIA-568-A for Category 5 connecting termination hardware and the 568A wiring scheme.

2.2.4.3 Floor Mounted Telecommunications Outlet

Floor mounted telecommunications outlets shall be designed for flush mounting to the slap floor with an access door for the connectors. A small strain relief door shall provide cable access to the connectors when the main access door is closed. The floor outlet shall connect to the under floor trench duct and shall come equipped with four modular four pair 8 pin modular jacks, with two jacks labeled "voice" and the other two jacks labeled "data" in accordance with TIA/EIA 606. The modular jacks shall be configured for the eight position jack pin/pair assignments, designation T568A and shall conform to EIA ANSI/TIA/EIA-568-A, NFPA 70 and CFR 47 Part 68.

2.2.4.4 Systems Furniture Telecommuincations Outlet

All systems furniture outlets shall use a bezel or faceplate capable of being mounted to the systems furniture communications track or raceway. Bezels or faceplates shall snap in to the communications track or be attached via mounting bars and screws, and shall be extended depth to accommodate the bend radius for Cat 5 cable. Each Systems Furniture faceplate shall come equipped with four 8 pin modular connectors, with two jacks labeled "voice" and the other two jacks labeled "data". The modular jacks shall be configured for EIA/TIA 568A and shall conform to EIA ANSI/TIA/EIA-568-A for category 5, NFPA 70 and CFR 47 Part 68. Mounting plates provided for systems furniture shall match the systems furniture in color.

2.2.4.5 Patch Panels

Patch panels shall consist of eight-position modular jacks, with rear mounted type 110 insulation displacement connectors, arranged in rows or columns on 480 mm (19 inch) rack mounted panels. Jack pin/pair configuration shall be T568A per EIA ANSI/TIA/EIA-568-A. Jacks shall be unkeyed . Panels shall be labeled with alphanumeric x-y coordinates .

2.2.4.6 Patch Cords

Patch cords shall be cable assemblies consisting of flexible, twisted pair stranded wire with eight-position plugs at each end. Cable shall be label-verified. Cable jacket shall be factory marked at regular intervals indicating verifying organization and performance level. Patch cords shall be wired straight through; pin numbers shall be identical at each end and shall be paired to match T568A patch panel jack wiring per EIA ANSI/TIA/EIA-568-A. Patch cords shall be unkeyed . Patch cords shall be factory assembled.

2.2.4.7 Terminal Blocks

Terminal blocks shall be wall mounted wire termination units consisting of insulation displacement connectors mounted in plastic blocks, frames or housings. Blocks shall be type 110 which meet the requirements of EIA ANSI/TIA/EIA-568-A for category 3 or 5 as shown. Blocks shall be mounted on standoffs and shall include cable management hardware. Insulation displacement connectors shall terminate 22 or 24 gauge solid copper wire as a minimum, and shall be connected in pairs so that horizontal cable and connected jumper wires are on separate connected terminals.

2.3 COAXIAL CABLE SYSTEM

2.3.1 TV Coaxial Cable

Premise TV coaxial cable shall be 75 ohm +/-2 ohms, minimum of 13mm outside diameter, RG-6U type, or as indicated on the drawings. Cable shall be label-verified. Cable jacket shall be factory marked at regular intervals indicating verifying organization and performance level. Where required, cable shall be classified low smoke and low flame for use in air plenums in accordance with NFPA 70.

2.4 FIBER OPTIC CABLE SYSTEM

2.4.1 Backbone Cable

2.4.1.1 Singlemode

Singlemode fiber optic backbone cable shall meet the requirements of ICEA S-83-596 and the following: operation at a center wavelength of 1310 and 1550 nm; core/cladding diameter 8.3 nominal/125 micrometer; maximum attenuation 2.0 dB/km at 1300 nm, 1.75 dB/km at 1550 nm. Numerical aperture for each fiber shall be a minimum of 0.10. Cable construction shall be tight buffered type. Cable shall be imprinted with fiber count and aggregate length at regular intervals. Individual fibers shall be color coded for identification. Cable shall be rated OFNR, OFNP and OFNG per NFPA 70.

2.4.2 Connecting Hardware

2.4.2.1 Connectors

Connectors shall be SC type with ceramic ferrule material with a maximum insertion loss of .5 dB. Connectors shall meet performance requirements of EIA ANSI/TIA/EIA-568-A. Connectors shall be field installable. Connectors shall utilize adhesive for fiber attachment to ferrule. Connectors shall terminate fiber sizes as required for the service.

2.4.2.2 Patch Panels

Patch panels shall be a complete system of components by a single manufacturer, and shall provide termination, splice storage, routing, radius limiting, cable fastening, storage, and cross-connection. Patch panels shall be 480 mm (19 inch) rack mounted panels. Patch panels shall provide strain relief for cables. Panels shall be labeled with alphanumeric x-y coordinates . Patch panel connectors and couplers shall be the same type and configuration as used elsewhere in the system.

2.4.2.3 Patch Cords

Patch cords shall be cable assemblies consisting of flexible optical fiber cable with connectors of the same type as used elsewhere in the system. Optical fiber shall be the same type as used elsewhere in the system. Patch cords shall be complete assemblies from manufacturer's standard product lines.

2.5 EQUIPMENT RACKS

2.5.1 Floor Mounted Open Frame

Floor mounted equipment racks shall be aluminum relay racks with uprights to mount equipment 480 mm (19 inches) wide. Uprights shall be 75 mm deep channel, 32 mm wide, drilled and tapped 12-24 in a 13 mm pattern. Racks shall be provided with a standard top crossmember, and predrilled base plate to allow floor fastening. Open frame equipment racks shall be 2.1 m in height and [painted] black. AC outlets shall be provided as shown.

2.5.2 Cable Guides

Cable guides shall be specifically manufactured for the purpose of routing cables, wires and patch cords horizontally and vertically on 480 mm (19 inch) equipment racks. Cable guides shall consist of ring or bracket-like devices mounted on rack panels for horizontal use or individually mounted for vertical use. Cable guides shall mount to racks by screws and/or nuts and lockwashers.

2.6 EQUIPMENT MOUNTING BACKBOARD

Plywood backboards shall be provided, sized as shown, painted with white or light colored paint.

2.7 TELECOMMUNICATIONS OUTLET BOXES

Electrical boxes for telecommunication outlets shall be 117 mm square by 53 mm deep with minimum 9 mm deep single or two gang plaster ring as shown. Provide a minimum 25 mm conduit.

2.8 Cable "J" Hooks

Cable "J" hooks shall be sheet steel, with a galvanized finish, wide base cable hangers specifically designed to support Category 5 Cabling. The "J" hooks shall have a wide base with smooth, rounded corners to eliminate the potential for snags during installation, while preventing the development of stress points where the cable bundle is supported. Telephone "D" rings or bridle rings are not an acceptable substitute for cable "J" hooks.

PART 3 EXECUTION

3.1 INSTALLATION

System components and appurtenances shall be installed in accordance with NFPA 70, manufacturer's instructions and as shown. Necessary interconnections, services, and adjustments required for a complete and operable signal distribution system shall be provided. Components shall be labeled in accordance with EIA ANSI/TIA/EIA-606. Penetrations in fire-rated construction shall be firestopped in accordance with Section 07270 FIRESTOPPING. Conduits, outlets and raceways shall be installed in accordance with Section 16415 ELECTRICAL WORK, INTERIOR. Wiring shall be installed in accordance with EIA ANSI/TIA/EIA-568-A and as specified in Section 16415 ELECTRICAL WORK, INTERIOR. Wiring, and terminal blocks and outlets shall be marked in accordance with EIA ANSI/TIA/EIA-606. Cables shall not be installed in the same cable tray, utility pole compartment, or floor trench compartment with ac power cables. Cables not installed in conduit or wireways shall be properly secured and neat in appearance and, if installed in plenums or other spaces used for environmental air, shall comply with NFPA 70 requirements for this type of installation.

3.1.1 Horizontal Distribution Cable

The rated cable pulling tension shall not be exceeded. Cable shall not be stressed such that twisting, stretching or kinking occurs. Cable shall not be spliced. Fiber optic cables shall be installed either in conduit or rated "J" hooks and through type cable trays to prevent microbending losses. Copper cable not in a wireway shall be suspended a minimum of 200 mm above ceilings by cable supports no greater than 1.5 m apart.Any sag greater than 12 inches shall be corrected by adding an additional "J" hook for support. Cable shall not be run through structural members or in contact with pipes, ducts, or other potentially damaging items. Placement of cable parallel to power conductors shall be avoided, if possible; a minimum separation of 300 mm (12 inches) shall be maintained when such placement cannot be avoided. Cables shall be terminated; no cable shall contain unterminated elements. Minimum bending radius shall not be exceeded during installation or once installed. Cable ties shall not be excessively tightened such that the transmission characteristics of the cable are altered. In raised floor areas, cable shall be installed after the flooring system has been installed.

3.1.2 Riser and Backbone Cable

Vertical cable support intervals shall be in accordance with manufacturer's recommendations. Cable bend radius shall not be less than ten times the outside diameter of the cable during installation and once installed. Maximum tensile strength rating of the cable shall not be exceeded. Cable shall not be spliced.

3.1.3 Telecommunications Outlets

3.1.3.1 Faceplates

As a minimum each jack shall be labeled as to its function and a unique number to identify cable link.

3.1.3.2 Cables

Unshielded twisted pair and fiber optic cables shall have a minimum of 150 mm of slack cable loosely coiled into the telecommunications outlet boxes. Minimum manufacturers bend radius for each type of cable shall not be exceeded.

3.1.3.3 Pull Cords

Pull cords shall be installed in all conduit serving telecommunications outlets which do not initially have fiber optic cable installed.

3.1.3.4 Raised Floor Outlet

Raised floor outlets shall be placed in the corner of floor tiles between 1 and 3 inches from the tile edge so as not to interfere with the tile support structure. Raised floor outlets shall be fastened to the tiles from the bottom of the tile so that there is no outlet movement from a 200 pound load on the outlet from above. The floor outlets shall be supported by the tile on all sides, with no visible gaps open from the room to the true floor. Raised floor outlets shall be mounted so as to be removable and separable from the floor tile without disconnecting cables. All outlets shall be connected individually to the duct distribution system.

3.1.3.4.1 Raised Floor Outlet Connection

All cables and conduits shall be connected to the raised floor outlet boxes so as to allow its removal and separation from the floor tile. The floor outlets shall be connected to the appropriate signal distribution system with a minimum of 1" flex conduit. The flex conduit shall be covered with non-metallic, non-conductive insulation and shall not be allowed to contact (electrically) any other distribution systems. Where required, flex conduit insulation shall be classified low smoke and low flame for use in air plenums in accordance with NFPA 70. It shall be run under any other ducts mounted 3 or more inches off of the true floor and over any other conduits under the raised floor. All box connector threads shall be covered by plastic bushings within the enclosure. Flex conduit runs shall be limited to 10 feet, with additional length being provided by rigid conduit between the flex conduit and the duct. Between 3 and 5 feet of slack shall be provided in each run, beyond that required to terminate the outlet as shown on the drawings, to provide for future movement. Flex conduit shall have electrical continuity to the duct system and to the outlet box.

3.2 Floor Mounted Telecommunications Outlets

Floor Mounted Telecommunications Outlets shall be installed in accordance with Section 16415 ELECTRICAL WORK, INTERIOR.

3.3 Terminal Blocks

Terminal blocks shall be mounted in orderly rows and columns. Adequate vertical and horizontal wire routing areas shall be provided between groups of blocks. Industry standard wire routing guides shall be utilized.

3.4 Unshielded Twisted Pair Patch Panels

Patch panels shall be mounted in equipment racks with sufficient modular jacks to accommodate the installed cable plant plus 10 percent spares. Cable guides shall be provided above, below and between each panel.

3.5 Fiber Optic Patch Panels

Patch panels shall be mounted in equipment racks with sufficient ports to accommodate the installed cable plant plus 10 percent spares. A slack loop of fiber shall be provided within each panel. Loop shall be 900 mm in length. The outer jacket of each cable entering a patch panel shall be secured to the panel to prevent movement of the fibers within the panel, using clamps or brackets specifically manufactured for that purpose.

3.6 Equipment Racks

Open frame equipment racks shall be bolted to the floor slab. Cable guides shall be bolted or screwed to racks. Racks shall be installed level. Ganged racks shall be bolted together. Ganged rack cabinets shall have adjacent side panels removed. Wall mounted racks shall be secured to the mounting surface to prevent fully loaded racks from separating from the mounting surface.

3.7 Rack Mounted Equipment

Equipment to be rack mounted shall be securely fastened to racks by means of the manufacturer's recommended fasteners.

3.8 TERMINATION

Cables and conductors shall sweep into termination areas; cables and conductors shall not bend at right angles. Manufacturer's minimum bending radius shall not be exceeded. When there are multiple system type drops to individual workstations, relative position for each system shall be maintained on each system termination block or patch panel.

3.8.1 Unshielded Twisted Pair Cable

Each pair shall be terminated on appropriate outlets, terminal blocks or patch panels. No cable shall be unterminated or contain unterminated elements. Pairs shall remain twisted together to within the proper distance from the termination as specified in EIA ANSI/TIA/EIA-568-A. Conductors shall not be damaged when removing insulation. Wire insulation shall not be damaged when removing outer jacket.

3.8.2 Shielded Twisted Pair Cable

Each cable shall be terminated on panel-mounted connectors. Cables shall be grounded at patch panels using manufacturer's recommended methods. Shield braid shall be continuous to connector braid terminator. Wire insulation shall not be damaged when removing shield.

3.8.3 Coaxial Cable

Home run type station cables shall be terminated at each end. Backbone cables shall be terminated with appropriate connectors or end-of-line terminators as required. Loop-type cable systems shall be terminated with appropriate drop connectors and terminators as required. Backbone cable shield conductor shall be grounded to communications ground at only one point and shall not make electrical contact with ground anywhere else.

3.8.4 Fiber Optic Cable

Each fiber shall have connectors installed. The pull strength between the connector and the attached fiber shall be not less than11.3 kg. The mated pair loss, without rotational optimization, shall not exceed 1.0 dB. Fiber

optic connectors shall be installed per EIA ANSI/TIA/EIA-568-A.

3.9 GROUNDING

Signal distribution system ground shall be installed in the telecommunications entrance facility and in each telecommunications closet in accordance with EIA ANSI/TIA/EIA-607 and Section 16415 ELECTRICAL WORK, INTERIOR. Equipment racks shall be connected to the electrical safety ground.

3.10 ADDITIONAL MATERIALS

The Contractor shall provide the following additional materials required for facility startup.

a. 10 of each type outlet.

b. 10 of each type cover plate.

c. 1 of each type terminal block for each telecommunications closet.

d. 90 Patch cords of 3 m for each telecommunications closet.

d. 90 CAT 5 Patch cords of 2 m for each telecommunications closet.

d. 36 SM FO Patch cords of 3 m for each telecommunications closet.

e. 1 Set of any and all special tools required to establish a cross connect and to change and/or maintain a terminal block.

3.11 ADMINISTRATION AND LABELING

3.11.1 Labeling

3.11.1.1 Labels

All labels shall be in accordance with EIA ANSI/TIA/EIA-606.

3.11.1.2 Cable

All cables will be labeled using color labels on both ends with encoded identifiers per EIA ANSI/TIA/EIA-606.

3.11.1.3 Termination Hardware

All workstation outlets and patch panel connections will be labeled using color coded labels with [encoded] identifiers per EIA ANSI/TIA/EIA-606.

3.12 TESTING

Materials and documentation to be furnished under this specification are subject to inspections and tests. All components shall be terminated prior to testing. Equipment and systems will not be accepted until the required inspections and tests have been made, demonstrating that the signal distribution system conforms to the specified requirements, and that the required equipment, systems, and documentation have been provided.

3.12.1 Unshielded Twisted Pair Tests

All metallic cable pairs shall be tested for proper identification and continuity. All opens, shorts, crosses, grounds, and reversals shall be corrected. Correct color coding and termination of each pair shall be verified in the communications closet and at the outlet. Horizontal wiring shall be tested from and including the termination device in the communications closet to and including the modular jack in each room. Backbone wiring shall be tested end-to-end, including termination devices, from terminal block to terminal block, in the respective communications closets. These test shall be completed and all errors corrected before any other tests are started.

3.12.2 Category 3 and Category 5 Circuits

Twenty five percent of the installed category 3 circuits, selected on a random basis, and all category 5 circuits shall be tested using a test set that meets the Class II accuracy requirements of EIA TSB 67 standard. Testing shall use the Basic Link Test procedure of EIA TSB 67. If more than 5 percent of the category 3 circuits tested fail, then all category 3 circuits shall be tested. Cables which contain failed circuits shall be replaced and retested to verify the standard is met.

3.12.3 Shielded Twisted Pair

Wiring configuration shall be tested for continuity, opens, shorts, swaps and correct pin configuration; dc resistance both pair-to-pair and wire-to-shield shall be verified. Cable lengths shall be verified. Near end crosstalk shall be tested from 772 kHz to 300 MHz. Ground potential difference between wiring closets, ground potential difference between patch panel and wall outlet, and ground path resistance shall be tested per IBM GA27-3361-07.

3.12.4 Coaxial Cable

Cable shall be tested for continuity, shorts and opens. Characteristic impedance shall be verified over the range of intended operation. Cable length shall be verified. Cable shall be sweep tested for attenuation over the range of intended operation.

3.12.5 Fiber Optic Cable

Unless stated otherwise, tests shall be performed from both ends of each circuit. Connectors shall be visually inspected for scratches, pits or chips and shall be reterminated if any of these conditions exist. Each circuit leg and complete circuit shall be tested for insertion loss at 1310 and 1550 nm using a light source similar to that used for the intended communications equipment. High-resolution optical time domain reflectometer (OTDR) tests shall be performed from one end of each fiber. Scale of the OTDR trace shall be such that the entire circuit appears over a minimum of 80 percent of the X-axis.

-- End of Section --

SECTION 16711

TELEPHONE SYSTEM, OUTSIDE PLANT

PART 1 GENERAL

1.1 REFERENCES

The publications listed below form a part of this specification to the extent referenced. The publications are referred to in the text by basic designation only.

AMERICAN NATIONAL STANDARDS INSTITUTE (ANSI)

ANSI C62.61	(1993) Gas Tube Surge Arrestors on Wire Line Telephone Circuits

AMERICAN SOCIETY FOR TESTING AND MATERIALS (ASTM)

ASTM D 2239	(1996a) Polyethylene (PE) Plastic Pipe (SIDR-PR) Based on Controlled Inside Diameter

ELECTRONIC INDUSTRIES ASSOCIATION (EIA)

EIA ANSI/EIA-455-81A	(1992) FOTP-81 Compound Flow (Drip) Test for Filled Fiber Optic Cable
EIA ANSI/EIA/TIA-455-30B	(1991) FOTP-30 Frequency Domain Measurement of Multimode Optical Fiber
EIA ANSI/EIA/TIA-455-53A	(1990) FOTP-53 Attenuation by Substitution Measurement for Multimode Graded-Index Optical Fibers or Fiber Assemblies Used in Long Length Communications Systems
EIA ANSI/EIA/TIA-455-78A	(1990; R 1995) FOTP-78 Spectual Attenuation Cutback Measurement for Single Mode Optical Fibers
EIA ANSI/TIA/EIA-568A	(1995) Commercial Building Telecommunications Cabling Standard
EIA ANSI/TIA/EIA-607	(1994) Commercial Building Grounding and Bonding Requirements for Telecommunications

INSTITUTE OF ELECTRICAL AND ELECTRONICS ENGINEERS (IEEE)

IEEE C2	(1997) National Electrical Safety Code

NATIONAL FIRE PROTECTION ASSOCIATION (NFPA)

NFPA 70	(1996; Errata 96-4) National Electrical Code

RURAL UTILITIES SERVICE (RUS)

RUS Bulletin 1753F-401(PC-2)	(1995) RUS Standard for Splicing Copper and Fiber Optic Cables
RUS REA Bulletin 345-72	(1985) REA Specification for Filled Splice Closures (PE-74)
RUS REA Bulletin 345-90	(1986) Totally Filled Fiber Optic Cable (PE-90)
RUS REA Bulletin 345-151	(1989) Specifications and Drawings for Conduit and Manhole Construction (Form 515c)
RUS REA Bulletin 1751F-641	(1995) Construction of Buried Plant
RUS REA Bulletin 1755I-100	(1991; Rev through Supple 11 Nov 92) List of Materials Acceptable for Use on Telephone System of REA Telephone Borrowers
RUS REA PC-4	(1976) Acceptance Tests and Measurements of Telephone Plant
RUS REA PE-33	(1985) Shield Bonding Connectors
RUS REA PE-39	(1993) REA Specification for Filled Telephone Cables
RUS REA PE-60	(1979) Trunk Carrier Systems
RUS REA PE-87	(1994) Terminating (TIP) Cable
RUS REA PE-89	(1993) Filled Telephone Cables with Expanded Insulation
RUS REA TE&CM 635-03	(1988; Addenda 1 through 4) Construction of Aerial Cable Plant
RUS REA TE&CM 643-02	(1983) Underground Conduit and Manhole Design and Construction (Physical Plant)

UNDERWRITERS LABORATORIES (UL)

UL 497	(1995; Rev Mar 1996) Protectors for Paired Conductor Communication Circuits

1.2 SYSTEM DESCRIPTION

The outside plant system shall consist of all cable, conduit, manholes, poles, etc. required to provide signal paths from the closest point of presence to the new facility, including free standing frames or backboards, terminating cables, lightning and surge protection modules at the entry facility. The work consists of furnishing, installing, testing and making operational a complete outside plant system for continuous use.

1.3 QUALIFICATIONS

1.3.1 Cable Installers

Installation shall be under the direct supervision of an individual with a minimum of 3 years experience in the installation of the specified copper and fiber optic cable and components.

1.3.2 Cable Splicing and Termination

All cable splicers shall have training in the proper techniques and have a minimum of 3 years experience in splicing and terminating the specified cables. Modular splices shall be performed by factory certified personnel or under direct supervision of factory trained personnel for products used.

1.3.3 Manufacturers

The cable, equipment, and hardware provided shall be from manufacturers that have a minimum of 3 years experience in producing the types of cable, equipment, and hardware specified.

1.4 SUBMITTALS

Government approval is required for submittals with a "GA" designation; submittals having an "FIO" designation are for information only. The following shall be submitted in accordance with Section 01330 SUBMITTAL PROCEDURES:

SD-01 Data

Spare Parts and Equipment List; FIO;AR.

A data list of recommended spare parts, tools, and test equipment for each different item of material and equipment specified prior to beneficial occupancy. The data shall include a complete list of parts and supplies, with current unit prices and source of supply.

SD-04 Drawings

Telephone System; GA|ARAR.

Detail drawings, consisting of a complete list of equipment and material, including manufacturer's descriptive and technical literature, performance charts and curves, and catalog cuts. Detail drawings shall also contain complete configuration information, wiring diagrams and any other details required to demonstrate that the cable system has been coordinated to support the transmission systems identified in the specifications and drawings. Drawings shall show proposed layout and anchorage of equipment and appurtenances, and equipment relationship to other parts of the work including clearance for maintenance and operations.

Record Drawings; GA|AR.

Record drawings for the installed wiring system showing the actual location of all cable terminations, splices, routing, and size and type of all cables. The identifier for each termination and cable shall appear on the drawings. The drawings shall include gauge and pair or fiber count for each cable, duct and innerduct arrangement, or conductor assignment of outside plant, and protector and connector block layout at the termination points after installation.

SD-06 Instructions

Installation; GA|AR.

Printed copies of the manufacturer's recommendations for the material being installed, prior to installation. Installation of the item will not be allowed to proceed where installation procedures, or any part thereof, are required to be in accordance with those recommendations until the recommendations are received and approved.

SD-08 Statements

Acceptance Tests; GA|AR.

Test plans defining all tests required to ensure that the system meets specified requirements. The test plans shall define milestones for the tests, equipment, personnel, facilities, and supplies required. The test plans shall identify the capabilities and functions to be tested.

Cutover and Records; GA|AR.

The cutover plan shall provide procedures and schedules for relocation of facility station numbers without interrupting service to any active location.

SD-09 Reports

Acceptance Tests; GA|AR.

Test reports in booklet form showing all field tests performed, upon completion and testing of the installed system. Measurements shall be tabulated on a pair by pair or strand by strand basis.

SD-13 Certificates

Telephone System; FIO;AR.

Proof that the items furnished under this section conform to the specified requirements in FCC, ICEA, REA, RUS, ANSI, ASTM, NFPA, EIA, or UL, where materials and equipment are so specified.

Qualifications; GA|AR.

The qualifications of the manufacturer, splicer, and installation supervisor as specified.

1.5 DELIVERY AND STORAGE

1.5.1 Cable Requirements-

All cable shall be shipped on reels. The diameter of the drum shall be large enough to prevent damage to the cable during reeling and unreeling. The reels shall be constructed to prevent damage during shipment and handling. The outer end of the cable shall be securely fastened to the reel head to prevent the cable from becoming loose in transit. The inner end of the cable shall project into a slot in the side of the reel, or into a housing on the inner slot of the drum, with sufficient length to make it available for testing. The inner end shall be fastened to prevent the cable from becoming loose during installation. End seals shall be applied to each of the cables to prevent moisture from entering the cable. The reels with cable shall be suitable for outside storage conditions when the

temperature ranges from minus 40 to plus 65 degrees C, with relative humidity from 0 to 100 percent.

1.5.2 Equipment

All equipment shall be stored with protection from the weather, humidity and temperature variations, dirt and dust, or other contaminants, in accordance with the manufacturer's requirements.

PART 2 PRODUCTS

2.1 STANDARD PRODUCTS

Materials and equipment shall be the standard products of a manufacturer regularly engaged in the manufacture of such products and shall be the manufacturer's latest standard design that has been in satisfactory use for at least 2 years prior to bid opening. Each major component of equipment shall have the manufacturer's name and type identified on the equipment. All products supplied shall be specifically designed and manufactured for use with outside plant communications systems. All items of the same class of equipment shall be the products of a single manufacturer.

2.2 CABLE

2.2.1 Copper Conductor Cable

Copper conductor cable shall conform to the following:

2.2.1.1 Underground

Cable shall be manufactured per RUS REA PE-39 or RUS REA PE-89. A 0.12 mm copper clad alloy steel or 0.12 mm copper clad stainless steel metallic shield shall be provided.

2.2.2 Fiber Optic Cable

Reeled fiber optic cable shall be specifically designed for outside use, be filled or loose buffer construction, and conform to RUS REA Bulletin 345-90.

2.2.2.1 Cable Cores

A central, nonmetallic core member shall be included to serve as a cable core foundation to reduce strain on the fibers, but not to serve as a pulling strength member.

2.2.2.2 Optical Fiber

Single-mode optical fibers shall be Class IV. Multi-mode optical fibers shall be Class Ia.

2.2.2.3 Performance Requirements

The fiber optic cable shall comply with the specified mechanical performance requirements while used in buried and underground duct applications where the temperature varies from minus 20 to plus 60 degrees C. Optical performance degradation shall be less than 5 percent of the optical performance requirements in the temperature range of minus 20 to plus 60 degrees C. The fiber optic cable shall not be damaged in storage where the temperature may vary from minus 40 to plus 65 degrees C.

2.3 CLOSURES

2.3.1 Copper Conductor Closures

2.3.1.1 Underground Closure

Underground closures shall conform to RUS REA Bulletin 345-72. The closure shall be of thermoplastic, thermoset, or stainless steel material and be suitable for use in a vault or manhole.

2.3.2 Fiber Optic Closures

2.3.2.1 Fiber Optic Underground

The underground closure shall be suitable to house a splice organizer in a protective housing. An encapsulating compound shall be poured into this enclosure. The closure shall be of thermo-plastic, thermoset-plastic, or stainless steel material and suitable for use in a vault or manhole. The encapsulating compound shall be re-enterable and shall not alter the chemical stability of the closure.

2.4 CABLE SPLICES AND ORGANIZERS

2.4.1 Copper Cable Splices

All cables greater than 25 pairs shall be spliced using modular splicing connectors, which accommodate 25 pairs of conductors at a time. The correct connector size shall be used to accommodate the wire gauge of the cable to be spliced. The connectors used shall be listed in RUS REA Bulletin 1755I-100.

2.4.2 Fiber Optic Cable Splices

Each fiber optic splice shall be physically protected by a splice kit. The kit shall be specially designed for the splice.

2.4.3 Fiber Optic Splice Organizer

The splice organizer shall be suitable for housing fiber optic splices in a neat and orderly fashion. The splice organizer shall allow for a minimum of 1 m of fiber for each fiber within the cable to be neatly stored without kinks or twists. The splice organizer shall accommodate individual strain relief for each splice. The splice organizer shall allow for future maintenance or modification, without damage to the cable or splices. All required splice organizer hardware, such as splice trays, protective glass shelves, and shield bond connectors shall be provided in the organizer kit.

2.5 MANHOLE AND DUCT

All manhole and duct products shall conform to RUS REA TE&CM 643-02.

2.5.1 New Manholes

New manholes shall be equipped with pulling-in irons, cable racks, and ground rod, and conform to the requirements of RUS REA Bulletin 345-151. Manholes shall be a minimum of 3.7 m long by 1.8 m wide by 2.0 m high. Manholes shall be designed so that the main trunk conduits enter and exit near the center of the ends, and lateral conduits exit on the sides near

the corners. Manholes may be pre-cast or cast in place.

2.5.2 Manhole Overbuilds

Existing manholes which are enlarged as part of this project shall be equipped with new pulling-in irons, cable racks, and ground rod.

2.5.3 Duct/Conduit

Conduit shall be furnished as specified in Sections 16415 ELECTRICAL WORK, INTERIOR and 16375 ELECTRICAL DISTRIBUTION SYSTEM, UNDERGROUND and as shown on project drawings.

2.5.4 Innerduct

Innerduct shall be SIDR 11.5 polyethylene plastic pipe conforming to ASTM D 2239.

2.6 EQUIPMENT RACKS

Distribution frames, cabinets, and back-boards shall be provided as shown and designed to mount connector blocks, protector blocks, cross connects, and other hardware required to terminate and protect the outside telephone plant cable; to provide a demarcation point between inside and outside plant cable; and to allow inside and outside plant cable to be cross connected.

2.6.1 Floor Mounted Open Frame

Floor mounted equipment racks shall be double sided aluminum relay racks with uprights to mount equipment 480 mm wide. Uprights shall be 75 mm deep channel, 32 mm wide, drilled and tapped 12-24 in a 13 mm pattern. Racks shall be provided with a standard top cross-member, and predrilled base plate to allow floor fastening. Open frame equipment racks shall be 2.1 m in height and painted black. AC outlets shall be provided as shown.

2.6.2 Cable Guides

Cable guides shall be specifically manufactured for the purpose of routing cables, wires and patch cords horizontally and vertically on 480 mm equipment racks. Cable guides shall consist of ring or bracket-like devices mounted on rack panels for horizontal use or individually mounted for vertical use. Cable guides shall mount to racks by screws and/or nuts and lock-washers.

2.6.3 Equipment Mounting Backboard

Backboards shall be 19 mm AC plywood, sized as shown, painted with white or light colored paint.

2.7 CONNECTOR BLOCKS

Connector blocks consisting of flame-retardant molded plastic fastened to a metal mounting bar shall be provided to terminate the outside plant cable as shown. The connector blocks shall be of 100-pair block size and equipped with protection modules. The connector blocks shall be 24 gauge stub type. The cable stubs shall be 100 pair and conform to RUS REA PE-87.

2.8 PROTECTOR MODULES

The protector modules shall be of the two-element gas tube type. Protection modules shall be heavy duty, A>10 kA, B>400, C>65A where A is the maximum single impulse discharge current, B is the impulse life and C is the AC discharge current per ANSI C62.61. The gas modules shall shunt high voltage to ground, fail short, be equipped with an external spark gap and heat coils, and shall comply with UL 497.

2.9 FIBER-OPTIC TERMINATIONS

2.9.1 Fiber Optic Connectors

All outside plant fiber strands shall be terminated in a SC type fiber optic connector, with ceramic ferrule material and a maximum insertion loss of 0.5 dB. Connectors shall meet performance standards of EIA ANSI/TIA/EIA-568A. If pre-connectorized cable assemblies or pigtails are used, the connectors shall be terminated on a 3 m length of single-fiber cable. The single-fiber cable shall contain a buffered optical fiber of the same type and specification as that used in the multi-fiber cable.

2.9.2 Fiber Optic Patch Panels

Patch panels shall be a complete system of components by a single manufacturer, and shall provide termination, splice storage, routing, radius limiting, cable fastening, storage, and cross-connection. Patch panels shall be 480 mm rack mounted panels. Patch panels shall provide strain relief for cables. Panels shall be provided with labeling space. Patch panel connectors and couplers shall be the same type and configuration as used elsewhere in the system.

2.10 MISCELLANEOUS ITEMS

2.10.1 Shield Connectors

Shield connectors shall make a stable, low-impedance electrical connection between the shield of the communications cable and a conductor such as a strap, bar, or wire. The connector shall be made of tin-plated tempered brass. Shield bond connectors shall comply with RUS REA PE-33.

2.10.2 Grounding Braid

Grounding braid shall provide low electrical impedance connections for dependable shield bonding. The braid shall be made from flat tin-plated copper.

2.10.3 Warning Tape

Marking and locating tape shall be acid and alkali resistant polyethylene film, 150 mm wide with a minimum strength of 12.1 MPa lengthwise and 10.3 MPa crosswise. The tape shall be manufactured with integral wires, foil backing, or other means to enable detection by a metal detector when the tape is buried up to 1 m deep. The metallic core shall be encased in a protective jacket or provided with other means to protect it from corrosion and shall be specifically manufactured for marking and locating underground utilities. The warning tape shall be orange in color and continuously imprinted with the words "WARNING - COMMUNICATIONS CABLE BELOW" at not more than 1.2 m intervals.

2.10.4 Cable Warning Signs

Cable warning signs, which identify the route of buried cable, shall be stake mounted. The stake shall be driven into undisturbed soil and the sign shall be mounted to the stake in accordance with the manufacturer's instructions. Warning signs shall be placed at intervals of no more than 152.5 m and at each change of direction in the cable route. Warning signs shall also be placed on each side of every crossing of surface obstacles such as roads, railroads, stream crossings, or any similar crossing where excavation is likely to occur.

PART 3 EXECUTION

3.1 INSTALLATION

All system components and appurtenances shall be installed in accordance with the manufacturer's instructions and as shown. All installation work shall be done in accordance with the safety requirements set forth in the general requirements of IEEE C2 and NFPA 70.

3.1.1 Cable Inspection and Repair

All cable and wire used in the construction of the project shall be handled with care. Each reel shall be inspected for cuts, nicks or other damage. All damage shall be repaired to the satisfaction of the Contracting Officer. The reel wrap shall remain intact on the reel until the cable or wire is ready to be placed.

3.1.2 Underground Cable

Underground cable installation shall be accomplished in accordance with the requirements set forth in RUS REA Bulletin 1751F-641.

3.1.2.1 Cable Pulling

For cable installed in ducts and conduit, a cable feeder guide shall be used, between the cable reel and the face of the duct and conduit, to protect the cable and guide it into the duct and conduit as it is paid off the reel. As the cable is paid off the reel, it shall be inspected for jacket defects. Precautions shall be taken during installation to prevent the cable from being kinked or crushed. A pulling eye shall be attached to the cable and used to pull the cable through the duct and conduit system. Cable shall be hand fed and guided through each manhole. As the cable is paid off the reel into the cable feeder guide, it shall be sufficiently lubricated with a type of lubricant recommended by the cable manufacturer. Where the cable is pulled through a manhole, additional lubricant shall be applied at all intermediate manholes. Dynamometers or load-tension instruments shall be used to ensure that the pulling line tension does not exceed the installation tension value specified by the cable manufacturer. The mechanical stress placed upon a cable during installation shall not cause the cable to be twisted or stretched.

3.1.2.2 Penetrations for Cable Access

Penetrations in walls, ceilings or other parts of the building, made to provide for cable access, shall be caulked and sealed. Where conduits and ducts pass through fire walls, fire partitions, above grade floors, and fire rated chase walls, the penetration shall be sealed with fire stopping materials as specified in section 07270 FIRE STOPPING. Fire stopped penetrations shall not compromise the fire rating of the walls or floors.

All underground building entries shall be through waterproof facilities.

3.1.2.3 Cable Bends

Telephone cable bends shall have a radius of not less than 10 times the cable diameter. Only large radius sweeps shall be used in conduit runs and shall not exceed a cumulative 90 degrees between manholes.

3.1.3 Aerial Cable

Aerial cable installation shall be accomplished in accordance with the requirements set forth in RUS REA TE&CM 635-03.

3.1.4 Manhole and Ducts

Manhole and duct systems shall be installed in accordance with Section 16375 ELECTRICAL DISTRIBUTION SYSTEM, UNDERGROUND. Manholes shall be placed in line with the main duct. Splice cases shall be mounted in the center on the long sides. Lateral conduits shall exit the long sides near the corners.

3.1.4.1 Innerduct Installation

Innerduct shall be pulled through existing duct-manhole system in continuous sections. Splices, joints, couplings, or connections of any type will not be allowed between manholes. Innerduct shall be plugged at both ends with polyurethane foam duct seal; this material shall also be inserted between the innerduct and the duct if cables are placed in the innerducts. Only one cable shall be installed in a given innerduct. Existing and new unoccupied innerducts shall be trimmed leaving 50 mm exposed.

3.1.4.2 Pull Cord

Pull cords of 10 mm polypropylene shall be installed in all unused ducts and inner-ducts with a minimum of 610 mm spare cord protruding from each end.

3.1.5 Surge Protection

Except for fiber optic cable, all cables and conductors, which serve as communication lines, shall have surge protection meeting the requirements of RUS REA PE-60 installed at the entry facility.

3.2 SPLICING

3.2.1 Copper Conductor Splices

Copper conductor cable splicing shall be accomplished in accordance with RUS Bulletin 1753F-401(PC-2). Modular splicing shall be used on all cables larger than 25 pairs.

3.2.2 Fiber Optic Splices

Fiber optic splicing shall be in accordance with the manufacturer's recommendation; each splice shall have a loss of less than 0.1 dB.

3.3 GROUNDING

Except where specifically indicated otherwise, all exposed non-current carrying metallic parts of telephone equipment, cable sheaths, cable splices, and terminals shall be grounded. Grounding shall be in accordance with requirements of NFPA 70, Articles 800-33 and 800-40.

3.3.1 Ground Bars

3.3.1.1 Telecommunications Master Ground Bar (TMGB)

A copper TMGB shall be provided, in accordance with EIA ANSI/TIA/EIA-607, to be the hub of the basic grounding system by providing a common point of connection for ground from outside cable, MDF, and equipment. The TMGB shall have a ground resistance, including ground, of 10 ohms or less.

3.3.1.2 Telecommunications Ground Bar (TGB)

Copper TGB shall be provided in accordance with EIA ANSI/TIA/EIA-607 in each communications closet and room and each frame. The TGB shall be connected to the TMGB in accordance with EIA ANSI/TIA/EIA-607. Each TGB shall be connected to the TMGB by the most direct route utilizing a copper wire conductor with a total resistance of less than 0.01 ohms.

3.3.2 Incoming Outside Plant Cables

All incoming outside plant cable shields shall be bonded directly to the TMGB or the closest TGB.

3.3.3 Cable Stubs

All shields of cable stubs shall be bonded to a TGB located on the frame.

3.3.4 Shields

The shields of all incoming cables shall not be bonded across the splice to the cable stubs.

3.3.5 Protection Assemblies

The protector assemblies shall be mounted directly on the vertical frame ironwork. The assemblies mounted on each vertical frame shall be connected with a No. 6 AWG copper conductor to provide a low resistance path to the TGB.

3.3.6 Manholes

The shields of all cables in each manhole shall be bonded together by a bonding wire or ribbon. At intermediate manholes, where the cable is pulled through without a sheath opening, bonds are not required. If the manhole has a lacerating bonding ribbon, the shields of spliced cables shall be attached to it.

3.4 CUTOVER AND RECORDS

All necessary transfers and cutovers, shall be accomplished by the Contractor.

3.5 ACCEPTANCE TESTS

The Contractor shall provide all personnel, equipment, instrumentation, and

supplies necessary to perform all required testing. Notification of any planned testing shall be given to the Contracting Officer at least 14 days prior to any test; testing shall not proceed until after the Contractor has received written Contracting Officer's approval of the test plans as specified. The test plans shall define all the tests required to ensure that the system meets technical, operational, and performance specifications. The test plans shall define milestones for the tests, equipment, personnel, facilities, and supplies required. The test plans shall identify the capabilities and functions to be tested.

3.5.1 Copper Conductor Cable

The following acceptance tests shall be performed in accordance with RUS REA PC-4:

a. Shield continuity.

b. Conductor continuity.

c. Conductor insulation resistance.

d. Structural return loss.

e. Cable insertion loss and loss margin at carrier frequencies.

f. Shield ground for single jacketed cables.

g. DC loop resistance.

3.5.2 Fiber Optic Cable

Two optical tests shall be performed on all optical fibers: Optical Time Domain Reflectometry (OTDR) Test, and Attenuation Test. In addition, a Bandwidth Test shall be performed on all multi-mode optical fibers. These tests shall be performed on the completed end-to-end spans which include the near-end pre-connectorized single fiber cable assembly, outside plant as specified, and the far-end pre-connectorized single fiber cable assembly.

3.5.2.1 OTDR Test

The OTDR test shall be used to determine the adequacy of the cable installations by showing any irregularities, such as discontinuities, micro-bendings, improper splices, for the cable span under test. Hard copy fiber signature records shall be obtained from the OTDR for each fiber in each span and shall be included in the test results. The OTDR test shall be measured in both directions. A reference length of fiber, 1 km minimum, used as the delay line shall be placed before the new end connector and after the far end patch panel connectors for inspection of connector signature. The OTDR test shall be conducted in accordance with EIA ANSI/EIA-455-81A for single-mode fiber and EIA ANSI/EIA/TIA-455-78A for multi-mode fiber. Splice losses shall not exceed 0.1db. Attenuation losses shall not exceed 0.5 db/km at 1310 nm and 1550 nm for single-mode fiber. Attenuation losses shall not exceed 5.0 db/km at 850 nm and 1.5 db/km at 1300 nm for multi-mode fiber.

3.5.2.2 Attenuation Test

End-to-end attenuation measurements shall be made on all fibers, in both directions, using a 1300 nanometer light source at one end and the optical

power meter on the other end to verify that the cable system attenuation requirements are met. The measurement method shall be in accordance with EIA ANSI/EIA/TIA-455-53A.

3.5.2.3 Bandwidth Test

The end-to-end bandwidth of all multi-mode fiber span links shall be measured by the frequency domain method. The bandwidth shall be measured in both directions on all fibers. The bandwidth measurements shall be in accordance with EIA ANSI/EIA/TIA-455-30B.

-- End of Section --

SECTION 16721

FIRE DETECTION AND ALARM SYSTEM

PART 1 GENERAL

1.1 REFERENCES

The publications listed below form a part of this specification to the extent referenced. The publications are referred to in the text by basic designation only.

AMERICAN NATIONAL STANDARDS INSTITUTE (ANSI)

ANSI C135.30	(1988) Zinc-Coated Ferrous Ground Rods for Overhead or Underground Line Construction

INSTITUTE OF ELECTRICAL AND ELECTRONICS ENGINEERS (IEEE)

IEEE C62.41	(1991) Surge Voltages in Low-Voltage AC Power Circuits

NATIONAL FIRE PROTECTION ASSOCIATION (NFPA)

NFPA 70	(1996) National Electrical Code
NFPA 72	(1996) National Fire Alarm Code
NFPA 90A	(1993) Installation of Air Conditioning and Ventilating Systems

FEDERAL REGULATIONS

UNDERWRITERS LABORATORIES (UL)

UL-04	(1998) Fire Protection Equipment Directory
UL 6	(1993) Rigid Metal Conduit
UL 38	(1994; Rev Jan 1994) Manually Actuated Signaling Boxes for Use with Fire-Protective Signaling Systems
UL 268	(1989; Rev May 1989) Smoke Detectors for Fire Protective Signaling Systems
UL 464	(1990) Audible Signal Appliances
UL 467	(1993) Grounding and Bonding Equipment
UL 521	(1993) Heat Detectors for Fire Protective Signaling Systems
UL 797	(1993) Electrical Metallic Tubing

UL 864	(1991; Rev thru May 1994) Control Units for Fire-Protective Signaling Systems
UL 1242	(1983; Rev thru Jul 1993) Intermediate Metal Conduit

1.2 GENERAL REQUIREMENTS

1.2.1 Standard Products

Material and equipment shall be the standard products of a manufacturer regularly engaged in the manufacture of the products and shall be items that have been in satisfactory use for at least 2 years prior to bid opening. Equipment shall be supported by a service organization that can provide service within 24 hours.

1.2.2 Nameplates

Major components of equipment shall have the manufacturer's name, address, type or style, voltage and current rating, and catalog number on a noncorrosive and nonheat-sensitive plate which is securely attached to the equipment.

1.2.3 Keys and Locks

Locks shall be keyed alike.

1.2.4 Tags

Tags with stamped identification number shall be furnished for keys and locks.

1.2.5 Verification of Dimensions

The Contractor shall become familiar with all details of the work, verify all dimensions in the field, and shall advise the Contracting Officer of any discrepancy before performing the work.

1.2.6 Compliance

The fire detection and internal alarm system and the central reporting system shall be configured in accordance with NFPA 72. The equipment furnished shall be compatible and be UL listed or FM approved or approved or listed by a nationally recognized testing laboratory in accordance with the applicable NFPA standards.

1.2.7 Manufacturer's Services

Services of a manufacturer's representative who is experienced in the installation, adjustment, testing, and operation of the equipment specified shall be provided. The representative shall supervise the installation, adjustment, and testing of the equipment.

1.2.7.1 Year 2000 Compliance

The fire alarm system, including primary control panel and sub-panel hardware, software, firmware and middleware, whether acting alone or combined as a system, shall be Year 2000 Compliant as defined in FAR Part 39.

1.2.7.2 Warranty

The Contractor shall guarantee labor, materials, software, and equipment provided under this contract against defects in material or workmanship for a period of one year after the date of final acceptance. The cost of such warranty shall be part of this contract. Service during the guarantee period shall be provided within eight hours after notification and all repairs shall be effected within 24 hours after notification. Should the Contractor fail to comply, the Government will then have the option to make the necessary repairs and back charge the Contractor without any loss of warranty or guarantee.

The Contractor shall also guarantee against defects pertaining to Year 2000 Compliance until 1 January 2001. Service and repair to correct Year 2000 problems during this guarantee period shall be provided as stated above for the standard warranty period.

1.3 SYSTEM DESIGN

1.3.1 Operation

The fire alarm and detection system shall be a complete, supervised fire alarm system. The system shall be activated into the alarm mode by actuation of any alarm initiating device. The system shall remain in the alarm mode until initiating device is reset and the fire alarm control panel is reset and restored to normal. Alarm initiating devices shall be connected to signal line circuits (SLC), Style 5, in accordance with NFPA 72. Alarm indicating appliances shall be connected to indicating appliance circuits (IAC), Style X in accordance with NFPA 72. A two-loop conduit system shall be provided so that if any one conduit and all conductors contained in that conduit are severed all IDC, IAC, or SLC on that circuit shall remain functional. A two-loop system is not applicable to the central fire alarm communication center from the local panels. All textual, audible, and visual appliances and systems shall comply with NFPA 72.

Addressable system shall be microcomputer (microprocessor or microcontroller) based with a minimum word size of eight bits.

a. Sufficient memory shall be provided to perform as specified and as shown for addressable system.

b. Individual identity of each addressable device shall be provided for the following conditions:

   alarm
   trouble
   open
   short
   appliances missing/failed
   remote detector - sensitivity adjustment from the panel for smoke detectors

c. All addressable devices shall have the capability of individually being disabled or enabled from the panel.

1.3.2 Operational Features

The system shall have the following operating features:

a. Electrical supervision of alarm SLC and IAC. Smoke detectors shall have combined alarm initiating and power circuits.

b. Electrical supervision of the primary power (ac) supply, battery voltage, placement of alarm zone module (card, PC board) within the control panel, and transmitter tripping circuit integrity.

c. Trouble buzzer and trouble lamp (light emitting diode or neon light) to activate upon a single break, open, or ground fault condition. The trouble signal shall also operate upon loss of primary power (ac) supply, low battery voltage, removal of alarm zone module (card, PC board), any abnormal switch position, and disconnection of the circuit used for transmitting alarm signals off-premises. A trouble alarm silence switch shall be provided which will silence the trouble buzzer, but will not extinguish the trouble indicator lamp. After the system returns to normal operating conditions, the trouble buzzer shall again sound until the silencing switch returns to normal position, unless automatic trouble reset is provided.

d. Transmitter disconnect switch to allow testing and maintenance of the system without activating the transmitter but shall provide a trouble signal when disconnected and a restoration signal when reconnected. One person test mode - Activating an initiating device in this mode will activate an alarm for a short period of time, then automatically reset the alarm, without activating the transmitter during the entire process.

e. Evacuation alarm silencing switch or switches which, when activated, will silence alarm devices, but will not affect the zone indicating lamp nor the operation of the transmitter. This switch shall be over-ridden upon activation of a subsequent alarm from an unalarmed zone and the alarm devices will be activated.

f. Electrical supervision of circuits used for supervisory signal services. Supervision shall detect any open, short, or ground.

g. The system shall be arranged with alarm verification features for system smoke detectors.

1.3.3 Alarm Functions

1.3.3.1 Common Alarm Conditions

An alarm condition shall automatically initiate the following functions:

a. Transmission of a signal over the station telephonic fire reporting system. The signal shall be common for all alarm conditions.

b. Visual indications of the alarmed device on the fire alarm control panel annunciator and on the remote annunciator.

c. Continuous sounding of alarm notification appliances throughout the building.

1.3.3.2 Duct Smoke Detector Alarm Condition

Alarm Conditions in a Duct Smoke Detectors shall cause:

a. Items 1.3.3.1(a) thru 1.3.3.1(c).

b. Deactivation of the affected air handling unit.

1.3.3.3 ADP Room Alarm Condition

Activation of the ADP Room Sprinkler flow Switch or Verified Smoke Dectector Alarm Shall Cause:

a. Items 1.3.3.1(a) thru 1.3.3.1(c).

b. Shutdown of power to the data processing equipment.

1.3.3.4 Elevator Lobby, Machine Room and Hoistway Smoke detector Alarm

Verfied alarm conditions in a smoke detector located in an elevator lobby, hoistway or machine room shall cause:

a. Items 1.3.3.1(a) thru 1.3.3.1(c).
b. Initiate elevator emergency recall operation in accordance with ASME A17.1, Rule 211.1.

1.3.3.5 Elevator Machine Room and Hoistway Heat Detector Alarm

Alarm conditions in an elevator machine room or hoistway heat detector shall cause:

a. Items 1.3.3.1(a) thru 1.3.3.1(c).
b. Disconnect the main line power supply to the elevators.

1.3.4 Primary Power

Operating power shall be provided as required by paragraph Power Supply for the System. Transfer from normal to emergency power or restoration from emergency to normal power shall be fully automatic and not cause transmission of a false alarm. Loss of ac power shall not prevent transmission of a signal via the fire reporting system upon operation of any initiating circuit.

1.3.5 Battery Backup Power

Battery backup power shall be through use of rechargeable, sealed-type storage batteries and battery charger.

1.4 SUBMITTALS

Government approval is required for submittals with a "GA" designation; submittals having an "FI0" designation are for information only. Submittals requiring GA shall be reviewed and approved by the U.S. Army District Fire Protection Engineer prior to the purchase or installation of that equipment. The following shall be submitted in accordance with Section 01330 SUBMITTAL PROCEDURES:

SD-01 Data

Battery; GA|FPE.

Substantiating battery calculations for supervisory and alarm power requirements. Ampere-hour requirements for each system component and each panel component, and the battery recharging period shall be included.

Voltage Drop; GA|FPE.

Voltage drop calculations for signaling appliance circuits to indicate that sufficient voltage is available for proper appliance operation.

Qualifications; FIO;AR.

Qualifications, with verification of experience and license number, of a Registered Professional Engineer with at least 4 years of current experience in the design of the fire protection and detection systems. This engineer must perform the various specification items required by this section to be performed by a registered Professional Engineer.

SD-04 Drawings

Fire Alarm System; GA|FPE.

Detail drawings, signed by the Registered Professional Engineer, consisting of a complete list of equipment and material, including manufacturer's descriptive and technical literature, catalog cuts, and installation instructions. Note that the contract drawings show layouts based on typical detectors. The contractor shall check the layout based on the actual detectors to be installed and make any necessary revisions in the detail drawings. The detail drawings shall also contain complete wiring and schematic diagrams for the equipment furnished, equipment layout, and any other details required to demonstrate that the system has been coordinated and will properly function as a unit.

Detailed point-to-point wiring diagram, signed by the Registered Professional Engineer, showing all points of connection. Diagram shall include connections between system devices, appliances, control panels, supervised devices, and all equipment that is activated or controlled by the panel.

SD-06 Instructions

Fire Alarm System; GA|FPE.

Six copies of operating instructions outlining step-by-step procedures required for system startup, operation, and shutdown. The instructions shall include the manufacturer's name, model number, service manual, parts list, and brief description of all equipment and their basic operating features. Six copies of maintenance instructions listing routine maintenance procedures, possible breakdowns and repairs, and troubleshooting guide. The instructions shall include conduit layout, equipment layout and simplified wiring, and control diagrams of the system as installed. Instructions shall be approved prior to training.

Training; FIO;AR.

Lesson plans and training data, in manual format, for the training courses.

SD-13 Certificates

Equipment; GA|FPE.

Certified copies of current approvals or listings issued by UL, FM or other nationally recognized testing laboratory, showing compliance with specified NFPA standards. Certified copies of current approvals or listings issued by UL, FM or other nationally recognized testing laboratory, showing compliance with specified NFPA standards. Manufacturer's certification that all components and software are Year 2000 Compliant as defined by FAR Part 39.

Installer; FIO;AR.

The Contractor shall provide documentation demonstrating that its fire detection and alarm system installer has been regularly engaged in the installation of fire detection and alarm systems meeting NFPA standards for a minimum of three years immediately preceding commencement of this contract. Such documentation shall specifically include proof of satisfactory performance on at least three projects similar to that required by these specifications, including the names and telephone numbers of using agency points of contact for each of these projects. Documentation shall indicate the type of each system installed and include a written certificate that each system has performed satisfactorily in the manner specified for a period of not less than 12 months following completion. All such data shall be submitted 30 days prior to commencement of installation for approval of the Contracting Officer. Listing of the installer under "Protective Signaling Services - Local, Auxiliary, Remote Station Proprietary (UUJS)" of UL-04 shall be accepted as equivalent proof of compliance with the foregoing experience requirements.

Warranty; FIO;AR.

Six copies of a signed of warranty expressing the Contractor's guarantee of all labor, materials, software and equipment in accordance with the paragraph number 1.2, General Requirements.

1.5 DELIVERY AND STORAGE

All equipment delivered and placed in storage shall be stored with protection from the weather, humidity and temperature variation, dirt and dust, and any other contaminants.

PART 2 PRODUCTS

2.1 CONTROL PANEL

Control Panel shall comply with all the applicable requirements of UL 864. Panel shall be modular, installed in a surface mounted steel cabinet with hinged door and cylinder lock. Control panel shall be a clean, uncluttered, and orderly assembled panel containing all components and equipment required to provide the specified operating and supervisory functions of the system. The panel shall have prominent rigid plastic, phenolic or metal identification plates for all lamps, zones, controls, meters, fuses, and switches. Nameplates for fuses shall also include ampere rating. Control panel switches shall be within the locked cabinet. A suitable means shall be provided for testing the control panel visual indicating devices (meters or lamps). Meters and lamps shall be plainly visible when the cabinet door is closed. An 80 chacter alpha-numeric liquid chystal display (LCD) shall be provided to indicate by device any alarm, supervisory or trouble condition on the system. Each SLC initiating

circuit shall be powered and supervised so that a signal on one zone does not prevent the receipt of signals from other zones. Loss of power, including any or all batteries, shall not require the reloading of a program. Upon restoration of power, startup shall be automatic, and shall not require any manual operation. The loss of primary power or the sequence of applying primary or emergency power shall not affect the transmission of alarm, supervisory or trouble signals.

2.1.1 Visual Annunciators

Visual annunciators shall be provided to indicate system status including common alarm, trouble and supervisory conditions, normal power, ground faults and adnormal switch position. An 80 chacter LCD shall provide alpha-numeric description of all events and conditions.

2.1.2 Cabinets

Cabinets shall be provided with ample gutter space to allow proper clearance between the cabinet and live parts of the panel equipment. If more than one modular unit is required to form a control panel, the units shall be installed in a single cabinet large enough to accommodate all units. Cabinets shall have manufacturer's standard finish and color.

2.1.3 Remote System Trouble Audible/Visual Appliance

Audible appliance shall be integral with the remote graphic annunciator and operate in conjunction with the panel's integral trouble signal. The audible device shall be silenced by the system trouble silence switch.

2.1.4 Circuit Connections

Circuit conductors entering or leaving the panel shall be connected to screw-type terminals with each terminal marked for identification.

2.2 STORAGE BATTERIES

Storage Batteries shall be provided and shall be the sealed, lead-calcium type requiring no additional water. The batteries shall have ample capacity, with primary power disconnected, to operate the fire alarm system for a period of 48 hours. Following this period of operation via batteries, the batteries shall have ample capacity to operate all components of the system, including all alarm signaling devices in the total alarm mode for a minimum period of 15 minutes. Batteries shall be sized to deliver 50 percent more ampere/hours based on a 48 hour discharged rate than required for the calculated capacities. Batteries in the control panel shall be located at the bottom of the panel. Battery shall be provided with overcurrent protection in accordance with NFPA 72.

2.3 BATTERY CHARGER

Battery charger shall be completely automatic, with high/low charging rate, capable of restoring the batteries from full discharge to full charge within 12 hours. A separate ammeter shall be provided for indicating rate of charge. A separate voltmeter shall be provided to indicate the state of the battery charge. A pilot light indicating when batteries are manually placed on a high rate of charge shall be provided as part of the unit assembly if a high rate switch is provided. Charger shall be located in control panel or battery cabinet.

2.4 MANUAL FIRE ALARM STATIONS

Manual fire alarm stations shall conform to the applicable requirements of UL 38. Manual stations shall be the addressable type connected into SLC. Stations shall be installed on semi-flush mounted outlet boxes. Stations shall be double action type. Stations shall be finished in red, with raised letter operating instructions of contrasting color. Stations requiring the breaking of glass or plastic panels for operation are not acceptable. Stations employing glass rods are not acceptable. The use of a key or wrench shall be required to reset the station. Gravity or mercury switches are not acceptable. Switches and contacts shall be rated for the voltage and current upon which they operate. Stations shall have a separate screw terminal for each conductor. Surface mounted boxes shall be painted the same color as the fire alarm manual stations. Addressable pull stations shall be capable of being field programmed, shall latch upon operation and remain latched until manually reset.

2.5 FIRE DETECTING DEVICES

Fire detecting devices shall comply with the applicable requirements of NFPA 72, NFPA 90A, UL 268, and UL 521. The detectors shall be provided as indicated. Detector base shall have screw terminals for making connections. No solder connections will be allowed. Detectors shall be analog addressable type connected into Signal Line Circuits (SLC). Detectors located in concealed locations (above ceiling, etc.) shall have a remote visible indicator lamp. Installed devices shall conform to the classification of the area. Addressable fire detecting devices except flame detectors shall be dynamically supervised and uniquely identified in the control panel.

2.5.1 Heat Detectors

Heat detectors shall be the addressable type, designed for detection of fire by rate-compensating principle. Heat detectors shall be rated for a minimum of 15.2 m (50 foot) spacing (smooth-ceiling rated) in accordance with UL 521. Detectors shall be surface mounted type, with outlet box supported independently of wiring connections. Detectors shall be hermetically sealed and automatically resetting. Heat detectors shall have a temperature where heat detectors are used to shut down elevator power prior to sprinkler operaton, the detector shall have both a lower temperature rating and a higher sensitivity (lower response time index) relative to the sprinkler.

2.5.2 Smoke Detectors

Detectors shall be the addressable analog type designed for detection of abnormal smoke densities. Smoke detectors shall be photoelectric type. Detectors shall contain a visible indicator lamp that shows when the unit is in alarm condition. Detectors shall not be adversely affected by vibration or pressure. Detectors shall be the plug-in type in which the detector base contains terminals for making all wiring connections. Detectors that are in concealed (above false ceilings, etc.) locations shall have a remote visible indicator lamp.

2.5.2.1 Photoelectric Detectors

Detectors shall operate on a light scattering concept using an LED light source. Failure of the LED shall not cause an alarm condition. Detectors shall be factory set for sensitivity and shall require no field adjustments

of any kind. Detectors shall have an obscuration rating adjustabel by field programming. The smoke detection system shall be provided with alarm verification features.

2.5.2.2 Duct Detectors

Duct detectors shal be installed in addressable type housing and base, mounted on the exterior of duct with perforated sampling tube extended accross the width of the duct in accordance with manufacturer's instructions. Duct detectors shall be equipped with integral remote annunciator lamp to be ceiling mounted beneath the detector location.

2.6 ADDRESSABLE INTERFACE MODULES

Provide addressable interface (Monitor) modules to monitor non-addressable alarm initiating devices, supervisory devices and life safety equipment status points having normally open dry contacts. Mount the modules within 1-meter of the device or equipment they monitor. Provide Style B supervision of the circuit between the interface module and monitored contacts.

2.7 NOTIFICATION APPLIANCES

Audible appliances shall be heavy duty and conform to the applicable requirements of UL 464. Devices shall be connected into alarm indicating circuits and shall have a separate screw terminal for each conductor. Devices shall have manufacturer's standard finish and color.

2.7.1 Alarm Horns

Horns shall be surface mounted on recessed back box. Horns shall produce a minimum sound rating of at least 85 dBA at 3.048 m (10 feet). Horns used in exterior locations shall be specifically listed or approved for outdoor use and be provided with metal housing and protective grills.

2.7.2 Visual Notification Appliances

Visual notification appliances shall have high intensity optic lens and flash tubes and shallbe listed to UL Standard 1971.. Strobe shall be semi-flush mounted on walls. The minumum effective intensity shall be 75 candela and have a flash rate of 1 to 3 hertz as defined by UL 1971. Strobes rated for 15/75 candela do not meet this requirement.

2.7.3 Combination Audible/Visual Notification Appliances

Combination audible/visual notification appliances shall provide the same requirements as individual units except they shall mount as a unit in standard backboxes. All units shall be factory assembled. Any other audible indicating appliance employed in the fire alarm systems shall be approved by the authority having jurisdiction.

2.8 REMOTE ANNUNCIATION EQUIPMENT

2.8.1 Remote Graphic Annunciator

Graphic annunciator shall have a plan view of a typical floor . Each zone shall be indicated by an LED lamp shown in its relative position in the building. Lamps shall be provided for each type of alarm and supervisory device. Lamps shall be red for alarm condition ambel for supervisory

condition and amber for trouble condition. Plan views shall be approximately to scale. Annunciator shall have a door with piano hinge and two point cylinder lock or two cylinder locks. Lock shall be operable using the same key as the control panel. Annunciator shall contain a lamp test switch, audible trouble silence signal and a trouble switch to silence the audible alarm, but not extinguish the trouble lamp. Annunciator shall be flush mounted.

2.9 FIRE DETECTION AND ALARM SYSTEM PERIPHERAL EQUIPMENT

2.9.1 Ground Rods

Ground rods shall be of copper clad steel conforming to UL 467, zinc-coated steel conforming to ANSI C135.30 or solid stainless steel not less than15.9 mm in diameter by2.4 m in length.

2.9.2 Addressable Control Module

Provide for the supervised control of life safety equipment. Install modules within 1 m of the equipment of circuit they control (i.e., elevator shunt trip, power disconnects, elevator recall, fan shutdown and smoke damper control).

2.9.3 Conduit

All fire alarm circuits shall be installed in conduit or EMT. Conduit and fittings shall comply with UL 6, UL 1242 and UL 797.

2.9.4 Wiring

Wiring for 120V ac power shall be No. 12 AWG minimum. Wiring for low voltage notification appliance circuits shall be No. 14 AWG minimum Wiring for signal line circuits shall be in accordaance with manufacturer's requirements. Power wiring (over 28 volts) and control wiring shall be isolated. All wiring shall conform to NFPA 70. System field wiring shall be solid copper and installed in metallic conduit or electrical metallic tubing, except rigid plastic conduit may be used under slab-on-grade. All conductors shall be color coded. Conductors used for the same functions shall be similarly color coded. Wiring code color shall remain uniform throughout the circuit. Pigtail or T-tap connections to alarm indicating circuits are prohibited. Wiring shall be UL listed for use in fire alarm systems or as required by NFPA 70, Article 760. T-tapping using screw terminal blocks is allowed for addressable systems so long as Style 5 circuit supervision and performance is maintained.

2.9.5 Special Tools and Spare Parts

Special tools necessary for the maintenance of the equipment shall be furnished. Two spare fuses of each type and size required and five spare lamps and LED's of each type shall be furnished. Two percent of the total number of each different type of detector, but no less than two each, shall be furnished.

PART 3 EXECUTION

3.1 INSTALLATION

All work shall be installed as shown and in accordance with the manufacturer's diagrams and recommendations, unless otherwise specified.

3.1.1 Power Supply for the System

A single dedicated circuit connection for supplying power to each building fire alarm system shall be provided. The primary power shall be supplied as shown on the drawings. The power supply shall be equipped with a locking mechanism and marked "FIRE ALARM CIRCUIT CONTROL".

3.1.2 Wiring

Conduit size for wiring shall be in accordance with NFPA 70. Wiring for the fire alarm system shall not be installed in conduits, junction boxes, or outlet boxes with conductors of lighting and power systems. No more than one conductor shall be installed under any screw terminal. All circuit conductors entering or leaving any mounting box, outlet box enclosure or cabinet shall be connected to screw terminals with each terminal marked in accordance with the wiring diagram. Connections and splices shall be made using screw terminal blocks. The use of wire nut type connectors are prohibited in the system. Wiring within any control equipment shall be readily accessible without removing any component parts. The fire alarm equipment manufacturer's representative shall be present for the connection of wiring to the control panel.

3.1.3 Control Panel

The control panel and its assorted components shall be mounted so that no part of the enclosing cabinet is less than 300 mm nor more than 2 m above the finished floor. All manually operable controls shall be between 900 mm to 1.1 m above the finished floor. Panel shall be installed to comply with the requirements of UL 864.

3.1.4 Detectors

Detectors shall be installed in accordance with NFPA 72 with respect to spacing and locations near obstructions. Detectors shall be at least 300 mm from any part of any lighting fixture. Detectors shall be located at least 900 mm from diffusers of air handling systems. Each detector shall be provided with appropriate mounting hardware as required by its mounting location.

3.1.5 Notification Appliances

Notification appliances shall be mounted a minimum of2030 mm above the finished floor or 152 mm below the ceiling, whichever is lower.

3.1.6 Annunciator Equipment

Annunciator equipment provided shall be flush mounted where indicated.

3.2 OVERVOLTAGE AND SURGE PROTECTION

All equipment connected to alternating current circuits shall be protected from surges per IEEE C62.41 and NFPA 70. All cables and conductors which serve as communications links, except fiber optics, shall have surge protection circuits installed at each end. Fuses shall not be used for surge protection.

3.3 GROUNDING

Grounding shall be provided to building ground or ground rods shall be driven. Maximum impedance to ground shall be 25 ohms. Ground rods shall not protrude more than 150 mm above grade.

3.4 TESTING

The Contractor shall notify the Contracting Officer 30 days before the preliminary and acceptance tests are to be conducted. The tests shall be performed in accordance with the approved test procedures in the presence of the U.S. Army District Fire Protection Engineer prior to final acceptance. The control panel manufacturer's representative shall be present to supervise all tests. The Contractor shall furnish all instruments and personnel required for the tests.

3.4.1 Preliminary Tests

Upon completion of the installation, the system shall be subjected to functional and operational performance tests including tests of each installed initiating and notification appliance. Tests shall include the meggering of all system conductors to determine that the system is free from grounded, shorted, or open circuits. The megger test shall be conducted prior to the installation of fire alarm equipment. If deficiencies are found, corrections shall be made and the system shall be retested to assure that it is functional.

3.4.2 Acceptance Test

Testing shall be in accordance with NFPA 72. The recommended tests in NFPA 72 shall be considered mandatory and shall verify that all previous deficiencies have been corrected. The test shall include the following:

a. Test of each function of the control panel.

b. Test of each circuit in both trouble and normal modes.

c. Tests of alarm initiating devices in both normal and trouble conditions.

d. Tests of each control circuit and device.

e. Tests of each alarm notification appliance.

f. Tests of the battery charger and batteries.

g. Complete operational tests under emergency power supply.

h. Visual inspection of all wiring connections.

i. Opening the circuit at each alarm initiating device and notification appliance to test the wiring supervisory feature.

j. Ground fault

k. Short circuit faults

l. Stray voltage

m. Loop resistance

n. Tests to verify Year 2000 Compliance. Each item and system will be tested to assure that the equipment functions properly when the following dates are encountered: 9 Apr 1999, 9 Sep 1999, 1 Jan 2000, 10 Jan 2000, 29 Feb 2000 and 10 Oct 2000.

3.5 TRAINING

Training course shall be provided for the operations and maintenance staff. The course shall be conducted in the building where the system is installed or as designated by the Contracting Officer. The training period shall consist of one 8 hour training day and shall start after the system is functionally completed but prior to final acceptance tests. The instructions shall cover all of the items contained in the operating and maintenance instructions.

-- End of Section --

SECTION 16751

CLOSED CIRCUIT TELEVISION SYSTEMS

PART 1 GENERAL

1.1 REFERENCES

The publications listed below form a part of this specification to the extent referenced. The publications are referred to in the text by basic designation only.

CODE OF FEDERAL REGULATIONS (CFR)

47 CFR 15	Radio Frequency Devices

DEPARTMENT OF DEFENSE (DOD)

DOD 3235.1	(Rev H) Test & Evaluation of System Reliability Availability and Maintainability - A Primer

ELECTRONIC INDUSTRIES ASSOCIATION (EIA)

EIA 170	(1957) Electrical Performance Standards - Monochrome Television Studio Facilities
EIA ANSI/EIA/TIA-232-E	(1991) Interface Between Data Terminal Equipment and Data Circuit-Terminating Equipment Employing Serial Binary Data Interchange
EIA ANSI/EIA-310-D	(1992) Cabinets, Racks, Panels, and Associated Equipment
EIA ANSI/EIA-330	(1968) Electrical Performance Standards for Closed Circuit Television Camera 525/60 Interlaced 2:1
EIA ANSI/EIA-375-A-1976	(1974) Electrical Performance Standards for Direct View Monochrome Closed Circuit Television Monitors 525/60 Interlaced 2:1

INSTITUTE OF ELECTRICAL AND ELECTRONICS ENGINEERS (IEEE)

IEEE C2	(1997) National Electrical Safety Code
IEEE C62.41	(1991) Surge Voltages in Low-Voltage AC Power Circuits
IEEE Std 142	(1991) IEEE Recommended Practice for Grounding of Industrial and Commercial Power Systems

NATIONAL ELECTRICAL MANUFACTURERS ASSOCIATION (NEMA)

NEMA 250	(1991) Enclosures for Electrical Equipment (1000 Volts Maximum)

NATIONAL FIRE PROTECTION ASSOCIATION (NFPA)

NFPA 70	(1996; Errata) National Electrical Code

UNDERWRITERS LABORATORIES (UL)

UL 6	(1997) Rigid Metal Conduit
UL 1410	(1997) Television Receivers and High-Voltage Video Products

1.2 SYSTEM DESCRIPTION

1.2.1 General

The Contractor shall configure the system as described and shown. All television equipment shall conform to EIA 170 specifications. The system shall include all connectors, adapters, and terminators necessary to interconnect all equipment. The Contractor shall also supply all cabling necessary to interconnect the closed circuit television (CCTV) equipment installed in the Security Center, and interconnect equipment installed at remote control/monitoring stations. If the CCTV system is installed for use with an Intrusion Detection System (IDS) or Electronic Entry Control System (EECS) the Contractor shall interface the CCTV system with the IDS or EECS.

1.2.2 System Overall Reliability Requirement

The system, including all components and appurtenances, shall be configured and installed to yield a mean time between failure (MTBF) of at least 5000 hours, and shall be calculated based on the configuration specified in paragraph "System Overall Reliability Calculations."

1.2.3 Power Line Surge Protection

All equipment connected to AC power shall be protected from surges. Equipment protection shall withstand surge test waveforms described in IEEE C62.41. Fuses shall not be used for surge protection.

1.2.4 Video and Sync Signal Transmission Line Surge Protection

All cable, except fiber optic cable, used for sync or video signal transmission shall include protective devices to safeguard the CCTV equipment against surges. The surge suppression device shall not attenuate or reduce the video or sync signal under normal conditions. The surge suppression device shall be capable of dissipating not less than 1500 watts for 1 millisecond, and the response time from zero volts to clamping shall not be greater than 5 nanoseconds. Fuses shall not be used for surge protection.

1.2.5 Control Line Surge Protection

All cables and conductors, except fiber optic cables, which serve as communication, control, or signal lines shall be protected against surges and shall have surge protection installed at each end. Protection shall be furnished at the equipment and additional triple electrode gas surge

protectors rated for the application on each wireline circuit shall be installed within 1 m of the building cable entrance. Fuses shall not be used for surge protection. The inputs and outputs shall be tested in both normal mode and common mode using the following waveforms:

a. A 10 microsecond rise time by 1000 microsecond pulse width waveform with a peak voltage of 1500 volts and a peak current of 60 amperes.

b. An 8 microsecond rise time by 20 microsecond pulse width waveform with a peak voltage of 1000 volts and a peak current of 500 amperes.

1.2.6 Power Line Conditioners

A power line conditioner shall be furnished for the security console CCTV equipment. The power line conditioner shall be of the ferroresonant design, with no moving parts and no tap switching, while electrically isolating the secondary from the power line side. The power line conditioner shall be sized for 125 percent of the actual connected kVA load. Characteristics of the power line conditioner shall be as follows:

a. At 85 percent load, the output voltage shall not deviate by more than plus or minus 1 percent of nominal when the input voltage fluctuates between minus 20 percent to plus 10 percent of nominal.

b. During load changes of zero to full load, the output voltage shall not deviate by more than plus or minus 3 percent of nominal. Full correction of load switching disturbances shall be accomplished within 5 cycles, and 95 percent correction shall be accomplished within 2 cycles of the onset of the disturbance.

c. Total harmonic distortion shall not exceed 3-1/2 percent at full load.

1.2.7 Video and Control Signal Data Transmission Media

The Contractor shall provide a video signal transmission system as specified in Section 16791.

1.2.8 Environmental Conditions

1.2.8.1 Field Equipment

The cameras and all other field equipment shall be rated for continuous operation under ambient environmental conditions of minus 10.0 degrees C to 48.9 degrees C (14 degrees to 120 degrees F) using no auxiliary heating or cooling equipment. Equipment shall be rated for continuous operation under the ambient environmental temperature, humidity, wind loading, ice loading, and vibration conditions specified or encountered for the installed location.

1.2.8.2 Security Center Equipment

Security Center and remote control/monitoring station equipment shall, unless designated otherwise, be rated for continuous operation under ambient environmental conditions of 15.6 degrees C to 29.4 degrees C (60 degrees F to 85 degrees F) and a relative humidity of 20 to 80 percent.

1.2.9 Electrical Requirements

Electrically powered IDS equipment shall operate on 120 or 240 volt 60 Hz AC sources as shown. Equipment shall be able to tolerate variations in the voltage source of plus or minus 10 percent, and variations in the line frequency of plus or minus 2 percent with no degradation of performance.

All electrical and electronic equipment in the console shall be powered from an UPS provided as specified in Section 16610 UNINTERRUPTIBLE POWER SYSTEM (UPS). The UPS shall provide 4 hours battery back-up in the event of primary failure. Batteries shall be sealed non-outgassing type.

1.3 DELIVERY OF TECHNICAL DATA AND COMPUTER SOFTWARE

All items of computer software and technical data (including technical data which relates to computer software), which are specifically identified in this specification shall be delivered strictly in accordance with the CONTRACT CLAUSES, SPECIAL CONTRACT REQUIREMENTS, Section 01330 SUBMITTAL PROCEDURES, and in accordance with the Contract Data Requirements List (CDRL), DD Form 1423, which is attached to and thereby made a part of this contract. All data delivered shall be identified by reference to the particular specification paragraph against which it is furnished.

1.3.1 Group I Technical Data Package

1.3.1.1 System Drawings

The data package shall include the following:

a. System block diagram.

b. CCTV system console installation, block diagrams, and wiring diagrams.

c. Security center CCTV equipment installation, interconnection with console equipment, block diagrams and wiring diagrams.

d. Remote control/monitoring station installation, interconnection to security center including block diagrams and wiring diagrams.

e. Camera wiring and installation drawings.

f. Pan/tilt mount wiring and installation drawings.

g. Interconnection with video signal transmission system, block diagrams and wiring diagrams.

h. Surge protection device installation.

1.3.1.2 Manufacturers' Data

The data package shall include manufacturers' data for all materials and equipment and security center equipment provided under this specification.

1.3.1.3 System Description and Analyses

The data package shall include complete system descriptions, analyses and calculations used in sizing the equipment required by these specifications. Descriptions and calculations shall show how the equipment will operate as

a system to meet the performance of this specification. The data package shall include the following:

a. Switcher matrix size.

b. Camera call-up response time.

c. System start up and shutdown operations.

d. Switcher programming instructions.

e. Switcher operating and maintenance instructions.

f. Manuals for CCTV equipment.

g. Data entry forms.

1.3.1.4 Software Data

The data package shall consist of descriptions of the operation and capability of system and application software as specified.

1.3.1.5 Overall System Reliability Calculations

The data package shall include all manufacturer's reliability data and calculations required to show compliance with the specified reliability. The reliability data shall be prepared using DOD 3235.1 as a guide. The calculations shall be based on all CCTV equipment associated with one camera circuit and the console CCTV equipment, excluding the data transmission media (DTM).

1.3.1.6 Certifications

All specified manufacturer's certifications shall be included with the data package.

1.3.2 Group II Technical Data Package

The Contractor shall verify that site conditions are in agreement with the design package. The Contractor shall submit a report to the Government documenting changes to the site, or conditions that affect performance of the system to be installed. For those changes or conditions which affect system installation or performance, provide (with the report) specification sheets, or written functional requirements to support the findings, and a cost estimate to correct the deficiency. The Contractor shall not correct any deficiency without written permission from the Government.

1.3.3 Group IV Technical Data Package

The Contractor shall prepare test procedures and reports for the performance verification test and the endurance test. The Contractor shall deliver the performance verification test and endurance test procedures to the Government for approval. After receipt by the Contractor of written approval of the test procedures, the Contractor may schedule the tests. The contractor shall provide a report detailing the results of the field test and a video tape as specified in paragraph "Contractor's Field Testing." The final performance verification and endurance test report shall be delivered after completion of the tests.

1.3.3.1 Training Documentation

Lesson plans and training manuals for the training phases, including type of training to be provided with a sample training report, and a list of reference material, shall be delivered for approval.

1.3.3.2 Data Entry

The Contractor shall enter all data needed to make the system operational. The Contractor shall deliver the data to the Government on data entry forms, utilizing data from the contract documents, Contractor's field surveys, and all other pertinent information in the Contractor's possession required for complete installation of the data base. The Contractor shall identify and request from the Government, any additional data needed to provide a complete and operational CCTV system. The completed forms shall be delivered to the Government for review and approval at least 90 days prior to the Contractor's scheduled need date.

1.3.3.3 Graphics

Where graphics are required and are to be delivered with the system, the Contractor shall create and install all graphics needed to make the system operational. Graphics shall have sufficient level of detail for the system operator to assess the alarm. The Contractor shall supply hard copy, color examples at least 203.2 by 254.0 mm (8 by 10 inches) in size, of each type of graphic to be used for the completed CCTV system. If the video switcher does not use a monitor for display of system information, the Contractor shall provide examples of the video annotation used for camera identification. The graphics examples shall be delivered to the Government for review and approval at least 90 days prior to the Contractor's scheduled need date.

1.3.4 Group V Technical Data Package

Copies of the manuals as specified bound in hardback, loose-leaf binders, shall be delivered to the Government within 30 days after completing the endurance test. Each manual's contents shall be identified on the cover. The manual shall include names, addresses, and telephone numbers of each subcontractor installing equipment and systems, and nearest service representatives for each item of equipment for each system. The manuals shall have a table of contents and tab sheets. Tab sheets shall be placed at the beginning of each chapter or section and at the beginning of each appendix. The final copies delivered after completion of the endurance test shall include all modifications made during installation, checkout, and acceptance. The number of copies of each manual to be provided is 2.

1.3.4.1 Functional Design Manual

The functional design manual shall identify the operational requirements for the system and explain the theory of operation, design philosophy, and specific functions. A description of hardware and software functions, interfaces, and requirements shall be included for all system operating modes.

1.3.4.2 Hardware Manual

A manual shall describe all equipment furnished, including:

a. General hardware description and specifications.

b. Installation and checkout procedures.

c. Equipment electrical schematics and layout drawings.

d. System schematics and wiring lists.

e. System setup procedures.

f. Manufacturer's repair parts list indicating sources of supply.

g. Interface definition.

1.3.4.3 Software Manual

The software manual shall describe the functions of all software, and shall include all other information necessary to enable proper loading, testing and operation, including:

a. Definitions of terms and functions.

b. Procedures for system generation.

c. Description of implementation of the program.

d. Description of required sequences.

e. Directory of all disk files.

f. Description of all communications protocols, including data formats, command characters, and a sample of each type of data transfer.

1.3.4.4 Operator's Manual

The operator's manual shall explain all procedures and instructions for operation of the system including:

a. Video switcher.

b. Cameras and video recording equipment.

c. Use of the software.

d. Operator commands.

e. System start-up and shut-down procedures.

f. Recovery and restart procedures.

1.3.4.5 Maintenance Manual

The maintenance manual shall describe maintenance for all equipment including inspection, periodic preventive maintenance, fault diagnosis, and repair or replacement of defective components.

1.3.4.6 Final System Drawings

The Contractor shall maintain a separate set of drawings, elementary

diagrams and wiring diagrams of the CCTV system to be used for final system drawings. This set shall be accurately kept up to date by the Contractor with all changes and additions to the CCTV system and shall be delivered to the Government with the final endurance test report. In addition to being complete and accurate, this set of drawings shall be kept neat and shall not be used for installation purposes. Upon completion of the final system drawings, a representative of the Government will review the final system work with the Contractor. If the final system work is not complete, the Contractor will be so advised and shall complete the work as required. Final drawings submitted with the endurance test report shall be finished drawings on mylar or vellum.

1.4 TESTING

1.4.1 General

The Contractor shall perform predelivery testing, site testing, and adjustment of the completed CCTV system. The Contractor shall provide all personnel, equipment, instrumentation, and supplies necessary to perform all testing. Written notification of planned testing shall be given to the Government at least 14 days prior to the test, and in no case shall notice be given until after the Contractor has received written approval of the specific test procedures.

1.4.2 Test Procedures and Reports

Test procedures shall explain, in detail, step-by-step actions and expected results demonstrating compliance with the requirements of the specification. Test reports shall be used to document results of the tests. Reports shall be delivered to the Government within 7 days after completion of each test.

1.5 TRAINING

1.5.1 General

The Contractor shall conduct training courses for designated personnel in the maintenance and operation of the CCTV system as specified. If the CCTV system is being installed in conjunction with an IDS or EECS the CCTV training shall be concurrent and part of the IDS or EECS training. The training shall be oriented to the specific system being installed under this contract. Training manuals shall be delivered for each trainee with two additional manuals delivered for archiving at the project site. The manuals shall include an agenda, defined objectives for each lesson, and a detailed description of the subject matter for each lesson. The Contractor is responsible for furnishing all audio-visual equipment and all other training materials and supplies. Where the Contractor presents portions of the course through the use of audio-visual material, copies of the audio-visual materials shall be delivered to the Government, either as a part of the printed training manuals or on the same media as that used during the training sessions. A training day is 8 hours of instruction, including two 15 minute breaks and excluding lunchtime, Monday through Friday, during the daytime shift in effect at the facility. For guidance in planning the required instruction, the Contractor should assume the attendees will have a high school education or equivalent. Approval of the planned training schedule shall be obtained from the Government at least 30 days prior to the training.

1.5.2 Operator's Training

The course shall be taught at the project site for five consecutive training days during or after the Contractor's field testing. A maximum of 12 personnel will attend the course. No part of the training given during this course will be counted toward completion of the performance verification test. The course shall consist of classroom instruction, hands-on training, instruction on the specific hardware configuration of the installed system, and specific instructions for operating the installed system. The course shall demonstrate system start up, system operation, system shutdown, system recovery after a failure, the specific hardware configuration, and operation of the system and its software. The students should have no unanswered questions regarding operation of the installed CCTV system. The Contractor shall prepare and insert additional training material in the training manuals when the need for additional material becomes apparent during instruction. The Contractor shall prepare a written report after the completion of the course. The Contractor shall list in the report the times, dates, attendees and material covered at each training session. The Contractor shall describe the skill level of each student at the end of this course. The Contractor shall submit the report before the end of the performance verification test. The course shall include:

a. General CCTV hardware, installed system architecture and configuration.

b. Functional operation of the installed system and software.

c. Operator commands.

d. Alarm interfaces.

e. Alarm reporting.

f. Fault diagnostics and correction.

g. General system maintenance.

h. Replacement of failed components and integration of replacement components into the operating CCTV system.

1.6 MAINTENANCE AND SERVICE

1.6.1 General Requirements

The Contractor shall provide all services required and equipment necessary to maintain the entire CCTV system in an operational state as specified for a period of 1 year after completion of the endurance test, and shall provide all necessary material required for the work. Impacts on facility operations shall be minimized when performing scheduled adjustments or other unscheduled work.

1.6.2 Description of Work

The adjustment and repair of the CCTV system includes all computer equipment, software updates, signal transmission equipment, and video equipment. Provide the manufacturer's required adjustments and all other work necessary.

1.6.3 Personnel

Service personnel shall be qualified to accomplish all work promptly and satisfactorily. The Government shall be advised in writing of the name of the designated service representative, and of any changes in personnel.

1.6.4 Schedule of Work

The Contractor shall perform two inspections at 6-month intervals or less. This work shall be performed during regular working hours, Monday through Friday, excluding legal holidays. These inspections shall include:

a. Visual checks and operational tests of the CPU, switcher, peripheral equipment, interface panels, recording devices, monitors, video equipment electrical and mechanical controls, and a check of the picture quality from each camera.

b. Run system software and correct all diagnosed problems.

c. Resolve any previous outstanding problems.

1.6.5 Emergency Service

The Government will initiate service calls when the CCTV system is not functioning properly. Qualified personnel shall be available to provide service to the complete CCTV system. The Government shall be furnished with a telephone number where the service supervisor can be reached at all times. Service personnel shall be at the site within 24 hours after receiving a request for service. The CCTV system shall be restored to proper operating condition within 3 calendar days after receiving a request for service.

1.6.6 Operation

Performance of scheduled adjustments and repair shall verify operation of the CCTV system as demonstrated by the applicable portions of the performance verification test.

1.6.7 Records and Logs

The Contractor shall keep records and logs of each task, and shall organize cumulative records for each major component, and for the complete system chronologically. A continuous log shall be maintained for all devices. The log shall contain calibration, repair, and programming data. Complete logs shall be kept and shall be available for inspection on site, demonstrating that planned and systematic adjustments and repairs have been accomplished for the CCTV system.

1.6.8 Work Requests

The Contractor shall separately record each service call request, as received. The form shall include the serial number identifying the component involved, its location, date and time the call was received, nature of trouble, names of the service personnel assigned to the task, instructions describing what has to be done, the amount and nature of the materials to be used, the time and date work started, and the time and date of completion. The Contractor shall deliver a record of the work performed within 5 days after work is completed.

1.6.9 System Modifications

The Contractor shall make any recommendations for system modification in writing to the Government. No system modifications, including operating parameters and control settings, shall be made without prior approval of the Government. Any modifications made to the systems shall be incorporated into the operations and maintenance manuals, and other documentation affected.

1.6.10 Software

The Contractor shall recommend all software updates to the Government for approval. Upon Government approval, updates shall be accomplished in a timely manner, fully coordinated with the CCTV system operators, operation in the system verified, and shall be incorporated into the operations and maintenance manuals, and software documentation. There shall be at least one scheduled update near the end of the first year's warranty period, at which time the Contractor shall install and validate the latest released version of the manufacturer's software.

PART 2 PRODUCTS

2.1 MATERIALS AND EQUIPMENT

All system hardware and software components shall be produced by manufacturers regularly engaged in the production of CCTV equipment. Units of the same type of equipment shall be products of a single manufacturer. All material and equipment shall be new and currently in production. Each major component of equipment shall have the manufacturer's name and address, and the model and serial number in a conspicuous place. Equipment located at the security center or a remote control/monitoring station shall be rack mounted as shown. Television equipment shall comply with 47 CFR 15, Subparts C and H. Computing devices shall comply with 47 CFR 15, Subpart J.

2.1.1 Fungus Treatment

System components located in fungus growth inductive environments shall be completely treated for fungus resistance. Treating materials containing a mercury bearing fungicide shall not be used. Treating materials shall not increase the flammability of the component or surface being treated. Treating materials shall not cause skin irritation or other injury to personnel handling it during fabrication, transportation, operation, maintenance, or during the use of the finished items when used for the purpose intended.

2.1.2 Soldering

All soldering shall be done in accordance with standard industry practices.

2.2 ENCLOSURES

The Contractor shall provide metallic enclosures as needed for equipment not housed in racks or supplied with a housing. The enclosures shall be as specified or shown.

2.2.1 Interior

Enclosures to house equipment in an interior environment shall meet the requirements of NEMA 250 Type 12.

2.2.2 Exposed-to-Weather

Enclosures to house equipment in an outdoor environment shall meet the requirements of NEMA 250 Type 4X.

2.2.3 Corrosion-Resistant

Enclosures to house equipment in a corrosive environment shall meet the requirements of NEMA 250 Type 4X.

2.3 TAMPER PROVISIONS

Enclosures, cabinets, housings (other than environmental camera housings), boxes, raceways, conduits, and fittings of every description having hinged doors or removable covers, and which contain any part of the CCTV equipment or power supplies, shall be provided with cover operated, corrosion-resistant tamper switches, arranged to initiate an alarm signal when the door or cover is moved. Tamper switches shall be mechanically mounted to maximize the defeat time when enclosure covers are opened or removed. The enclosure and the tamper switch shall function together to not allow direct line of sight to any internal components and tampering with the switch or the circuits before the switch activates. Tamper switches shall be inaccessible until the switch is activated; have mounting hardware concealed so that the location of the switch cannot be observed from the exterior of the enclosure; be connected to circuits which are under electrical supervision at all times, irrespective of the protection mode in which the circuit is operating; shall be spring-loaded and held in the closed position by the door cover; and shall be wired so that they break the circuit when the door or cover is disturbed. Tamper switches on the doors which must be opened to make routine maintenance adjustments to the system and to service the power supplies shall be push/pull-set, automatic reset type.

2.3.1 Enclosure Covers

Covers of pull and junction boxes provided to facilitate installation of the system need not be provided with tamper switches if they contain no splices or connections, but shall be protected by tack welding or brazing the covers in place. Zinc labels shall be affixed to such boxes indicating they contain no connections. These labels shall not indicate that the box is part of the security system.

2.3.2 Conduit-Enclosure Connections

All conduit-enclosure connections shall be protected by tack welding or brazing the conduit to the enclosure. Tack welding or brazing shall be done in addition to standard conduit-enclosure connection methods as described in NFPA 70.

2.4 LOCKS AND KEY-LOCK OPERATED SWITCHES

2.4.1 Locks

All locks required to be installed on system enclosures for maintenance purposes shall be UL listed, round-key type, with three dual, one mushroom, and three plain pin tumblers or conventional key type lock having a combination of five cylinder pin and five-point three position side bar. Keys shall be stamped "U.S. GOVT. DO NOT DUP." The locks shall be so arranged that the key can only be withdrawn when in the locked position.

All maintenance locks shall be keyed alike and only two keys shall be furnished for all of these locks.

2.4.2 Key-Lock-Operated Switches

All key-lock-operated switches required to be installed on system components shall be UL listed, with three dual, one mushroom, and three plain pin tumblers, or conventional key type lock having a combination of five cylinder pin and five-point three position side bar. Keys shall be stamped "U.S. GOVT. DO NOT DUP." Key-lock-operated switches shall be two position, with the key removable in either position. All key-lock-operated switches shall be keyed differently and only two keys shall be furnished for each key-lock-operated-switch.

2.5 SYSTEM INTEGRATION

Equipment shall be supplied with all adapters, terminators, cables, main frames, card cages, power supplies, rack mounts, and appurtenances as needed.

2.6 SOLID STATE CAMERA

2.6.1 High Resolution Camera

The video camera shall conform to EIA 170 and EIA ANSI/EIA-330 specifications. All electronic components and circuits shall be solid state. Signal-to-noise ratio shall not be less than 46 dB unweighted. The camera shall exhibit no geometric distortion. The lens mount shall be a C-mount, and the camera shall have a back focus adjustment. The camera shall operate from minus 10.0 degrees C to plus 48.9 degrees C (14 to 120 degrees F) without auxiliary heating or cooling, and with no change in picture quality or resolution. The camera shall operate on 60 Hz AC power, and shall be capable of operating over a voltage range of 105 to 130 volts.

2.6.1.1 Solid State Image Array

The camera shall have a 8.8 by 6.6 mm (2/3 inch) format solid state imaging array, and the picture produced by the camera shall be free of blemishes as defined by EIA ANSI/EIA-330. The camera shall provide not less than 550 lines of horizontal resolution, and resolution shall not vary over the life of the camera.

2.6.1.2 Sensitivity

Camera shall provide full video output without camera automatic gain, and a scene reflectivity of 75 percent using an f/1.4 lens giving a camera faceplate illumination at 2850K of 0.431x (0.04 footcandle).

2.6.1.3 Camera Synchronization

The camera shall have an input for external sync, and shall automatically switch over to internal sync if external sync is not present. The camera shall also have the capability of synchronization by line-locking to the AC power 60 Hz line frequency at the zero crossing point, and shall provide not less than plus or minus 90 degrees of vertical phase adjustment.

2.6.1.4 Connectors

Cameras with lenses having auto iris, manual iris, or zoom and focus

functions shall be supplied with connectors and wiring as needed to operate the lens functions. Video signal output connector shall be a BNC. A connector shall be provided for external sync input.

2.6.1.5 Automatic Circuits

The camera shall have circuitry to establish a reference black level as described in EIA ANSI/EIA-330, and an automatic white clipper and automatic gain control circuits.

2.7 CAMERA LENSES

Camera lenses shall be all glass with coated optics. The lens mount shall be a C-mount. The lens shall be supplied with the camera, and shall have a maximum f-stop opening of f/1.4 or the maximum available for the focal length specified. The lens shall be equipped with an auto-iris mechanism unless otherwise specified. Lenses having auto iris, manual iris, or zoom and focus functions shall be supplied with connectors, wiring, receiver/drivers, and controls as needed to operate the lens functions. Lenses shall have sufficient circle of illumination to cover the image sensor evenly. Lenses shall not be used on a camera with an image format larger than the lens is designed to cover. Lens focal lengths shall be as shown or specified in the lens table.

2.8 CAMERA HOUSING

The camera and lens shall be enclosed in a tamper resistant housing as defined in the following specification. Any ancillary housing mounting hardware needed to install the housing at the camera location shall be provided as part of the housing.

2.8.1 Environmentally Sealed Camera Housing

The housing shall be designed to provide a condensation free environment for camera operation. The housing shall be constructed to be dust and water tight, and fully operational in 100 percent condensing humidity. The housing shall be purged of atmospheric air and pressurized with dry nitrogen, shall be equipped with a fill valve, overpressure valve, and shall have a humidity indicator visible from the exterior. Housing shall not have a leak rate greater than 13.8 kPa (2 pounds per square inch) at sea level within a 90 day period. The housing shall be equipped with supplementary camera mounting blocks or supports as needed to position the specified camera and lens to maintain the proper optical centerline. All electrical and signal connections required for operation of the camera and lens shall be supplied. The housing shall provide the environment needed for camera operation, and shall keep the viewing window free of fog, snow, and ice. The housing shall be equipped with a sunshield, and both the housing and the sunshield shall be white. A mounting bracket which can be adjusted to center the weight of the housing and camera assembly shall be provided as part of the housing. Provide heater and thermostat in housing 120v ac.

2.9 VIDEO MONITOR

The monitor shall conform to EIA 170, EIA ANSI/EIA-375-A-1976, and UL 1410 specifications. All electronic components and circuits shall be solid state except for the picture tube. The monitor shall operate on 120 volts 60 Hz AC power, shall have a stabilized high voltage power supply, and regulated low voltage power supplies. The monitor shall have automatic

frequency control (AFC), bandwidth greater than 7 MHz, and horizontal resolution not less than 700 lines at the center of the picture tube. The monitor shall be capable of reproducing a minimum of 10 discernable shades of gray as described in EIA ANSI/EIA-375-A-1976. The video input shall accept composite video with switchable loop-through or 75 ohm termination.

2.9.1 Picture Tube

The monitor shall have a 380 mm picture tube measured diagonally.

2.9.2 Configuration

The monitor shall be configured in a cabinet mount. Monitors shall not interfere with each other when rack mounted or operated next to each other as described in EIA ANSI/EIA-375-A-1976.

2.9.3 Controls

Front panel controls shall be provided for power on/off, horizontal hold, vertical hold, contrast, and brightness. The monitor shall have switchable DC restoration.

2.9.4 Connectors for Video Monitor

Video signal input and output shall be by BNC connectors.

2.10 VIDEO SWITCHER

The switcher shall conform to EIA 170 specifications, and shall be a vertical interval switcher. Electronic components, subassemblies, and circuits of the switcher shall be solid state. The switcher shall be microprocessor based and software programmable. The switcher shall be a modular system that shall allow for expansion or modification of inputs, outputs, alarm interfaces, and secondary control stations by addition of the appropriate modules. Switcher components shall operate on 120 volts 60 Hz AC power. The switcher central processor unit shall be capable of being interfaced to a master security computer for integrated operation and control. The video switcher central processing unit (CPU) shall have the capability of accepting time from a master clock supplied in ASCII format through an EIA ANSI/EIA/TIA-232-E input. All components, modules, cables, power supplies, software, and other items needed for a complete and operable CCTV switching system shall be provided. Switcher equipment shall be rack mounted unless otherwise specified. Rack mount hardware shall be supplied to mount the switcher components in a standard 482.6 mm (19 inch) rack as described in EIA ANSI/EIA-310-D.

2.10.1 Switcher Software

The switcher shall be software programmable, and the software shall be supplied as part of the switcher. The software shall be installed in the switcher CPU, and shall be configured as required by the site design. Changes or alterations of features under software control shall be accomplished through software programming without changes in hardware or system configuration. The switcher shall retain the current program for at least 4 hours in the event of power loss, and shall not require reprogramming in order to restart the system.

2.10.2 Switcher Matrix

The switcher shall be a programmable crosspoint switcher capable of switching any video input to any video output. The switcher to be installed at the site shall be configured to switch 12 cameras to 3 monitors, and shall have an expansion capability of not less than 25 percent.

2.10.3 Alarm Interface

An alarm interface shall be furnished with the switcher. The interface shall be compatible with the IDS or EECS alarm annunciation system. The alarm interface shall monitor alarm closures for processing by the switcher CPU. Alarm inputs to the alarm interface shall be relay contact or through an EIA ANSI/EIA/TIA-232-E interface. The alarm interface shall be modular and shall allow for system expansion. The alarm interface to be installed at the site shall be configured to handle 10 alarm points, and shall have an expansion capability of not less than 50 percent. An output shall be provided to actuate a video recorder.

2.10.4 Switcher Response Time and Alarm Processing

The switcher response time shall not be greater than 200 milliseconds from the time the alarm is sensed at the switcher alarm interface, until the picture is displayed on the monitor. The switcher shall continue to process subsequent alarms and shall put them in a queue. The operator shall be able to view the alarms in queue by operating an alarm release function which switches the subsequent alarms to the monitor in the order of occurrence.

2.10.5 Control Keyboards

Control and programming keyboards shall be supplied for the video switcher at the security center, and control keyboards shall be supplied for any control/monitoring stations as shown. The control keyboard shall provide the interface between the operator and the CCTV system, and shall relay commands from the operator to the switcher CPU. The keyboard shall provide control of the video switcher functions needed for operation and programming of the video switcher. Controls shall include, but not be limited to: programming the switcher, switcher control, lens function control, pan/tilt/zoom (PTZ) control, control of environmental housing accessories, and annotation programming. If the switcher CPU requires an additional text keyboard for system management functions, the keyboard shall be supplied as part of the video switcher.

2.10.6 Accessory Control Equipment

The video switcher shall be equipped with signal distribution units, preposition cards, expansion units, cables, software or any other equipment needed to ensure that the CCTV system is complete and fully operational.

2.10.7 Connectors for Video Switcher

Video signal input and output shall be by BNC connectors.

2.10.8 Video Annotation

Video annotation equipment shall be provided for the video switcher. The annotation shall be alphanumeric and programmable for each video source. Annotation to be generated shall include, but not be limited to: individual video source identification number, time (hour, minute, second) in a 24

hour format, date (month, day, year), and a unique, user-defined title with at least 8 characters. The annotation shall be inserted onto the source video so that both shall appear on a monitor or recording. The lines of annotation shall be movable for horizontal and vertical placement on the video picture. The annotation shall be automatically adjusted for date. Programmed annotation information shall be retained in memory for at least 4 hours in the event of power loss.

2.11 VIDEO CASSETTE RECORDER (VCR)

VCR shall conform to EIA 170 standards. The VCR shall be specifically designed as a time lapse recorder for use in security systems. The VCR shall operate on 120 volts 60 Hz AC power. Resolution of the VCR in normal play mode shall not be less than 320 horizontal lines in monochrome, 240 horizontal lines in color. Signal-to-noise ratio shall not be less than 40 dB. The VCR shall have a condensation or dew circuit. The VCR shall have a built-in time and date generator that can be turned on or off, and shall impose the time and date on the video during recording. A 24 hour battery back-up shall be provided to protect time/date and programmed information. The VCR shall have an audible warning alarm that shall annunciate the end of tape, excessive condensation, tape transport malfunction, or tape jam.

2.11.1 Tape and Tape Transport

The video tape used in the recorder shall be contained in a cassette mechanism, and shall not require the operator to thread the tape through the tape transport mechanism. The tape shall load through the front of the recorder.

2.11.2 Recording and Playback

The VCR shall be capable of recording for 240 hours or more on a single cassette tape with at least 6 user selectable time-lapse record speeds. The VCR shall have a contact closure alarm signal input which shall automatically switch the recorder into standard play, record mode when an alarm is initiated. The recorder shall reach stabilized record speed in 1 second or less. The VCR shall put a cue mark on the tape at the beginning of an alarm event recording. The alarm event record time shall be selectable for up to 3 minutes of automatic recording as a minimum. A record-lock feature shall be provided which shall protect the VCR against tampering with the tape transport controls and power control once recording has started. Playback functions shall include: alarm search, fast forward search, fast rewind search, rewind/fast forward, play, slow motion or step field/frame, and pause/still. VCR shall allow recording up to 15 cameras.

2.11.3 Connectors for VCR

Video signal input and output shall be by BNC connectors. The recorder shall provide connectors for alarm trigger signal input and output.

2.12 VIDEO FRAME STORE

The video frame store shall conform to EIA 170 standards. The frame store shall record video in a digital format. It shall be capable of recording 4 frames of video in at least a 256 x 256 matrix with at least 64 shades of gray. The frame store shall have a contact closure alarm signal input which shall automatically switch the frame store into the record mode when an alarm is initiated. The frame store shall start recording with the next full field after alarm triggering. The frame store shall operate on 120

volts 60 Hz AC power. Video signal input and output shall be by BNC connectors.

2.13 VIDEO SIGNAL EQUIPMENT

The following video signal equipment shall conform to EIA 170 specifications. Electrically powered equipment shall operate on 120 volts 60 Hz AC power. All video signal inputs and outputs shall be by BNC connectors.

2.13.1 Ground Loop Corrector

The ground loop corrector shall eliminate the measured ground loop interference (common mode voltage) in wireline or coaxial video transmission lines. The ground loop corrector shall pass the full transmitted video bandwidth with no signal attenuation or loss. Clamping ground loop correctors shall be capable of rejecting at least an 8 volt peak-to-peak 60 Hz common mode signal. Ground isolation transformers shall be capable of rejecting at least a 10 volt peak-to-peak 60 Hz common mode signal. Ground isolation amplifiers shall be capable of rejecting at least a 30 volt peak-to-peak 60 Hz common mode signal. Differential ground loop correctors shall be capable of rejecting at least a 100 volt peak-to-peak 60 Hz common mode signal.

2.13.2 Video Loss/Presence Detector

The video loss/presence detector shall monitor video transmission lines for presence of the video signal. The detector shall annunciate an alarm when the video signal drops below a pre-set threshold level. A threshold level adjustment shall be provided for each video channel, and the threshold level shall be continuously adjustable through a lockable front panel control. A front panel reset control shall be provided for each video channel, which shall reset the detector after an alarm. The video loss alarm shall be annunciated through a front panel LED and a contact closure as a minimum. Video input shall be loop-through, and the video shall be unaffected when the detector is turned off. The detector shall not attenuate or reduce the level of the video signal passing through it.

2.13.3 Video Equalizing Amplifier

The video equalizing amplifier shall be designed to correct loss in video signal level and high frequency attenuation caused by long distance video signal transmission over wireline DTM. The amplifier shall have independent signal gain and equalization controls. The amplifier shall be capable of equalizing at least 900 m of RG-11/U coaxial cable conforming to paragraph CCTV Equipment Video Signal Wiring. The amplifier shall provide a minimum of plus or minus 6 dB of video gain and 12 dB of high frequency compensation. At least one video output shall be provided for each video input. Bandwidth shall be 10 MHz or greater, and frequency response to 8 MHz shall be plus or minus 1 dB or less. Hum and noise shall be 50 dB below 1 volt peak-to-peak or better. Video inputs shall be 75 ohm unbalanced, terminating, differential grounded. Video outputs shall be 75 ohm, differential, source terminated, 1 volt peak-to-peak. Output isolation shall be 40 dB or greater at 5 MHz.

2.13.4 Master Video Sync Generator

The master video sync generator shall generate horizontal drive, vertical drive, blanking, and sync signals as a minimum, with at least one 75 ohm

output provided for each signal. The master oscillator crystal shall be pre-aged, and temperature stabilized, ovenized or temperature compensated. The sync generator shall have a composite video input and shall lock to the incoming video signal. If no video is present at the video input, the sync generator shall switch to internal crystal control. Not less than 2.5 microseconds advance and 2.5 microseconds delay of horizontal phase shall be provided. Vertical blanking width adjustment shall be provided. Vertical blanking width adjustment shall have a minimum selection range of 19, 20, and 21 lines.

2.14 CAMERA SUPPORT EQUIPMENT

The camera and lens contained in a camera housing shall be installed on a camera support as shown. Any ancillary mounting hardware needed to install the support and to install the camera on the support shall be provided as part of the support. The camera support shall be capable of supporting the equipment to be mounted on it including wind and ice loading normally encountered at the site.

2.14.1 Cantilever Camera Pole

The camera mounting pole shall be a non-hinged cantilever aluminum pole with mounting base. All fittings shall be stainless steel. The camera mounting plate shall locate the camera 4.6 m vertically from the base, and 1.5 m horizontally from the centerline of the pole to the centerline of the camera. The camera mount shall be adjustable with a minimum of 40 degrees pan away from the pole and 6 degrees pan toward the pole, and plus and minus 90 degrees of tilt. The pole shall have an internal wiring harness that routes video, sync, and power between the pole base and the camera mount. The wiring harness shall be compatible with the model camera to be mounted on the pole and the video DTM. Surge protection shall be provided at the pole between the wiring harness, and the incoming electronic signal lines and AC power line. The pole shall have a weatherproof, AC power service outlet that is surge protected and has a ground fault interruption device. Separate circuit breakers shall be provided for camera AC power and service outlet AC power.

2.14.2 Pan/Tilt Mounting Pole

The pan/tilt mounting pole shall be a tapered square aluminum pole. The pole shall be 7.62 meters high and shall have a mounting plate at the top for the pan/tilt. The pole and mounting plate shall have a corrosion-resistant finish. The mounting plate shall have a bolt hole pattern to match the base of the pan/tilt to be mounted on the pole. Under maximum loading, the total pole deflection shall not exceed 0.1 of one degree. A cable conduit shall be provided from the base of the pole to the mounting plate of the pan/tilt. The conduit shall be sized to accommodate all wiring needed for the camera and pan/tilt.

2.14.3 Pan/Tilt Mount

The pan/tilt mount shall be capable of supporting the camera, lens and housing specified. If the pan/tilt is to be mounted outdoors, the pan/tilt shall be weatherproof, and sized to accommodate the camera, lens and housing weight plus maximum wind loading encountered at the installation site. The pan/tilt shall have heavy duty bearings, hardened steel gears, externally adjustable limit stops for pan and tilt, and mechanical, dynamic or friction brakes. Pan/tilt shall be permanently lubricated. The motors shall be thermally or impedance protected against overload damage. Pan

movement shall not be less than 0 to 350 degrees, tilt movement shall not be less than plus and minus 90 degrees. Pan speed shall not be less than 6 degrees per second, and tilt speed shall not be less than 3 degrees per second. The pan/tilt shall be supplied complete with wiring, wiring harnesses, connectors, receiver/driver, pan/tilt control system, pre-position cards, or any other hardware and equipment as needed to provide a fully functional pan/tilt mount to fulfill the site design requirements.

2.15 ACCESSORIES

Standard 482.6 mm (19 inch) electronic rack cabinets conforming to EIA ANSI/EIA-310-D shall be provided for the CCTV system at the security center and remote control/monitoring sites as shown.

2.16 WIRE AND CABLE

The Contractor shall provide all wire and cable not indicated as Government Furnished Equipment. All wire and cable components shall be able to withstand the environment the wire or cable is installed in for a minimum of 20 years.

2.16.1 CCTV Equipment Video Signal Wiring

The coaxial cable shall have a characteristic impedance of 75 ohms plus or minus 3 ohms. RG 59/U coaxial signal cable shall have shielding which provides a minimum of 95 percent coverage, a solid copper center conductor of not less than 23 AWG, polyethylene insulation, and a black non-contaminating polyvinylchloride (PVC) jacket. RG 11/U coaxial cable shall have shielding which provides a minimum of 95 percent coverage, with center conductor of 18 AWG or larger polyethylene insulation, and a black non-contaminating polyvinylchloride (PVC) jacket.

2.16.2 Low Voltage Control Wiring

Twisted pair low voltage control wiring to be used above ground or as direct burial cable shall be provided as described in Section 16794 COAXIAL CABLE DATA TRANSMISSION MEDIA. Plenum or riser cables shall be IEEE C2 CL2P certified.

2.16.3 Digital Data Interconnection Wiring

Interconnecting cables carrying digital data between equipment located at the security center or at a secondary control/monitoring site shall be not less than 20 AWG and shall be stranded copper wire for each conductor. The cable or each individual conductor within the cable shall have a shield that provides 100 percent coverage. Cables with a single overall shield shall have a tinned copper shield drain wire. Plenum or riser cables shall be IEEE C2 CL2P certified.

2.17 PREDELIVERY TESTING

2.17.1 General

The Contractor shall assemble the test CCTV system as specified, and perform tests to demonstrate that the performance of the system complies with the contract requirements in accordance with the approved predelivery test procedures. The tests shall take place during regular daytime working hours on weekdays. Model numbers of equipment tested shall be identical to

those to be delivered to the site. Original copies of all data produced during predelivery testing, including results of each test procedure, shall be delivered to the Government at the conclusion of predelivery testing prior to Government approval of the test. The test report shall be arranged so that all commands, stimuli, and responses are correlated to allow logical interpretation.

2.17.2 Test Setup

The Contractor shall provide the equipment needed for the test setup and shall configure it to provide alarm actuated camera call-up and alarm recording as required to emulate the installed system. The test setup shall consist of at least 4 complete camera circuits. The alarm signal input to the CCTV test setup shall be by the same method that is used in the installed system. The video switcher shall be capable of switching any camera to any monitor and any combination of cameras to any combination of monitors. The minimum test setup shall include:

a. Four video cameras and lenses.

b. Three video monitors.

c. Video recorder if it is required for the installed system.

d. Video switcher including video input modules, video output modules, and control and applications software.

e. Alarm input panel if required for the installed system.

f. Pan/tilt mount and pan/tilt controller if the installed system includes cameras on pan/tilt mounts.

g. Any ancillary equipment associated with a camera circuit such as equalizing amplifiers, video loss/presence detectors, terminators, ground loop correctors, surge protectors or other in-line video devices.

h. Cabling for all components.

PART 3 EXECUTION

3.1 INSTALLATION

The Contractor shall install all system components including Government furnished equipment, and appurtenances in accordance with the manufacturer's instructions, IEEE C2 and as shown, and shall furnish all necessary connectors, terminators, interconnections, services, and adjustments required for a complete and operable system. All interior wiring, including low voltage wiring outside the security center control console and equipment racks, cabinets, boxes and similar enclosures, shall be installed in EMT conduit conforming to UL 6. Interconnection wiring between components mounted in the same rack or cabinet does not need to be installed in conduits. Minimum conduit size shall be 27 mm (3/4"). DTM shall not be pulled into conduits or placed in raceways, compartments, outlet boxes, junction boxes, or similar fittings with other building wiring. Flexible cords or cord connections shall not be used to supply power to any components of the CCTV system, except where specifically shown. All other electrical work shall be as specified in Section 16415 and as shown. Grounding shall be installed as necessary to preclude ground

loops, noise, and surges from adversely affecting system operation.

3.1.1 Current Site Conditions

The Contractor shall visit the site and verify that site conditions are in agreement with the design package. The Contractor shall report all changes to the site or conditions that will affect performance of the system to the Government in a report as defined in paragraph Group II Technical Data Package. The Contractor shall not take any corrective action without written permission from the Government.

3.1.2 Enclosure Penetrations

All enclosure penetrations shall be from the bottom unless the system design requires penetrations from other directions. Penetrations of interior enclosures involving transitions of conduit from interior to exterior, and all penetrations on exterior enclosures shall be sealed with rubber silicone sealant to preclude the entry of water. The conduit riser shall terminate in a hot-dipped galvanized metal cable terminator. The terminator shall be filled with an approved sealant as recommended by the cable manufacturer, and in such a manner that the cable is not damaged.

3.1.3 Cold Galvanizing

All field welds and brazing on factory galvanized boxes, enclosures, and conduits shall be coated with a cold galvanized paint containing at least 95 percent zinc by weight.

3.1.4 Interconnection of Console Video Equipment

The Contractor shall connect signal paths between video equipment of 7.5 m or less with RG-59/U coaxial cable and signal paths between equipment longer than 7.5 m with RG-11/U coaxial cable. Cables shall be as short as practicable for each signal path without causing strain at the connectors. Rack mounted equipment on slide mounts shall have cables of sufficient length to allow full extension of the slide rails from the rack.

3.1.5 Cameras

The Contractor shall install the cameras with the proper focal length lens as indicated for each zone; connect power and signal lines to the camera; set cameras with fixed iris lenses to the proper f-stop to give full video level; aim camera to give field of view as needed to cover the alarm zone; aim fixed mount cameras installed outdoors facing the rising or setting sun sufficiently below the horizon to preclude the camera looking directly at the sun; focus the lens to give a sharp picture over the entire field of view; and synchronize all cameras so the picture does not roll on the monitor when cameras are selected.

3.1.6 Monitors

The Contractor shall install the monitors as shown and specified; connect all signal inputs and outputs as shown and specified; terminate video input signals as required; and connect the monitor to AC power.

3.1.7 Switcher

The Contractor shall install the switcher as shown and according to manufacturer's instructions; connect all subassemblies as specified by the

manufacturer and as shown; connect video signal inputs and outputs as shown and specified; terminate video inputs as required; connect alarm signal inputs and outputs as shown and specified; connect control signal inputs and outputs for ancillary equipment or secondary control/monitoring sites as specified by the manufacturer and as shown; connect the switcher CPU and switcher subassemblies to AC power; load all software as specified and required for an operational CCTV system configured for the site requirements, including data bases, operational parameters, and system, command, and application programs; provide the original and 2 backup copies for all accepted software upon successful completion of the endurance test; and program the video annotation for each camera.

3.1.8 Video Recording Equipment

The Contractor shall install the video recording equipment as shown and as specified by the manufacturer; connect video signal inputs and outputs as shown and specified; connect alarm signal inputs and outputs as shown and specified; and connect video recording equipment to AC power.

3.1.9 Video Signal Equipment

The Contractor shall install the video signal equipment as specified by the manufacturer and as shown; connect video or signal inputs and outputs as shown and specified; terminate video inputs as required; connect alarm signal inputs and outputs as required; connect control signal inputs and outputs as required; and connect electrically powered equipment to AC power.

3.1.10 Camera Mount

The Contractor shall: install the camera mount as specified by the manufacturer and as shown; provide mounting hardware sized appropriately to secure the mount, camera and housing with maximum wind and ice loading encountered at the site; provide a foundation for each camera pole as specified; provide a ground rod for each camera pole and connect the camera pole to the ground rod as specified in Section 16528 EXTERIOR LIGHTING INCLUDING SECURITY AND CCTV APPLICATION; provide electrical and signal transmission cabling to the mount location as specified in Section 16794 COAXIAL CABLE DATA TRANSMISSION MEDIA; connect signal lines and AC power to mount interfaces; connect pole wiring harness to camera.

3.1.11 Pan/Tilt Mount

The Contractor shall install pan/tilt mount, receiver/driver and mount appurtenances as specified by the manufacturer; supply mounting hardware sized appropriately to secure pan/tilt, camera and housing with maximum wind and ice loading encountered at the site; install pan/tilt control wiring as specified in Section 16794 and as shown; and connect pan/tilt to control wiring and AC power.

3.2 SYSTEM STARTUP

The Contractor shall not apply power to the CCTV system until the following items have been completed:

a. CCTV system equipment items and DTM have been set up in accordance with manufacturer's instructions.

b. A visual inspection of the CCTV system has been conducted to ensure that defective equipment items have not been installed and

that there are no loose connections.

c. System wiring has been tested and verified as correctly connected as indicated.

d. All system grounding and transient protection systems have been verified as properly installed and connected as indicated.

e. Power supplies to be connected to the CCTV system have been verified as the correct voltage, phasing, and frequency as indicated.

f. Satisfaction of the above requirements shall not relieve the Contractor of responsibility for incorrect installation, defective equipment items, or collateral damage as a result of Contractor work/equipment.

3.3 SUPPLEMENTAL CONTRACTOR QUALITY CONTROL

The following requirements supplement the contractor quality control requirements specified elsewhere in the contract. The contractor shall provide the services of technical representatives who are thoroughly familiar with all components and installation procedures of the installed IDS; and are approved by the Contracting Officer. These representatives will be present on the job site during the preparatory and initial phases of quality control to provide technical assistance. These representatives shall also be available on an as needed basis to provide assistance with follow-up phases of quality control. These technical representatives shall participate in the testing and validation of the system and shall provide certification that their respective system portions meet its contractual requirements.

3.4 SITE TESTING

3.4.1 General

The Contractor shall provide all personnel, equipment, instrumentation, and supplies necessary to perform all site testing. The Government will witness all performance verification and endurance testing. Written permission shall be obtained from the Government before proceeding with the next phase of testing. Original copies of all data produced during performance verification and endurance testing shall be turned over to the Government at the conclusion of each phase of testing prior to Government approval of the test.

3.4.2 Contractor's Field Testing

The Contractor shall calibrate and test all equipment, verify DTM operation, place the integrated system in service, and test the integrated system. Ground rods installed by the Contractor shall be tested as specified in IEEE Std 142. The Contractor shall deliver a report describing results of functional tests, diagnostics, and calibrations including written certification to the Government that the installed complete system has been calibrated, tested, and is ready to begin performance verification testing. The report shall also include a copy of the approved performance verification test procedure. In addition, the Contractor shall make a master video tape recording showing typical day and night views of each camera in the system and shall deliver the tape with the report. Note any objects in the field of view that might produce

highlights that could cause camera blinding. Note any objects in the field of view or anomalies in the terrain which may cause blind spots. Note if a camera cannot be aimed to cover the zone and exclude the rising or setting sun from the picture. Note night assessment capabilities and whether lights or vehicle headlights cause blooming or picture degradation. If any of the above conditions or other conditions exist that cause picture degradation or interfere with the camera field of view, the Contractor shall inform the Contracting Officer. The tape shall be recorded using the video recorder installed as part of the CCTV system. If a recorder is not part of the CCTV system, the Contractor shall provide the tape in Video Home System (VHS) format. The Contractor shall provide the Government with the original tape as part of the documentation of the system and shall submit a letter certifying that the CCTV system is ready for performance verification testing. The field testing shall as a minimum include:

a. Verification that the video transmission system and any signal or control cabling have been installed, tested, and approved as specified under Section 16794.

b. When the system includes remote control/monitoring stations or remote switch panels, verification that the remote devices are functional, communicate with the security center, and perform all functions as specified.

c. Verification that the switcher is fully functional and that the switcher software has been programmed as needed for the site configuration.

d. Verification that switcher software is functioning correctly. All software functions shall be exercised.

e. Operation of all electrical and mechanical switcher controls and verification that the control performs the designed function.

f. Verification that all video sources and video outputs provide a full bandwidth signal that complies with EIA 170 at all video inputs.

g. Verification that all video signals are terminated properly.

h. Verification that all cameras are aimed and focused properly. The Contractor shall conduct a walk test of the area covered by each camera to verify the field of view.

i. Verification that cameras facing the direction of rising or setting sun are aimed sufficiently below the horizon so that the camera does not view the sun directly.

j. If vehicles are used in proximity of the assessment areas, verification of night assessment capabilities and determination if headlights cause blooming or picture degradation.

k. Verification that all cameras are synchronized and that the picture does not roll when cameras are switched.

l. Verification that the alarm interface to the IDS is functional and that automatic camera call-up is functional for all designated IDS or EECS alarm points and cameras.

m. When pan/tilt mounts are used in the system, verification that the limit stops have been set correctly. Verification of all controls for pan/tilt or zoom mechanisms are operative and that the controls perform the desired function. If preposition controls are used, verification that all home positions have been set correctly, and have been tested for auto home function and correct home position.

The Contractor shall deliver a report describing results of functional tests, diagnostics, and calibrations including written certification to the Government that the installed complete system has been calibrated, tested, and is ready to begin performance verification testing. The report shall also include a copy of the approved performance verification test procedure.

3.4.3 Performance Verification Test

The Contractor shall demonstrate that the completed CCTV system complies with the contract requirements. Using approved test procedures, all physical and functional requirements of the project shall be demonstrated and shown. The performance verification test, as specified, shall not be started until receipt by the Contractor of written permission from the Government, based on the Contractor's written report. This shall include certification of successful completion of Contractor Field Testing as specified in paragraph "Contractor's Field Testing," and upon successful completion of training as specified. The Government may terminate testing at any time when the system fails to perform as specified. Upon termination of testing by the Government or by the Contractor, the Contractor shall commence an assessment period as described for Endurance Testing Phase II. Upon successful completion of the performance verification test, the Contractor shall deliver test reports and other documentation as specified to the Government prior to commencing the endurance test.

3.4.4 Endurance Test

a. The Contractor shall demonstrate the specified requirements of the completed system. The endurance test shall be conducted in phases as specified. The endurance test shall not be started until the Government notifies the Contractor, in writing, that the performance verification test is satisfactorily completed, training as specified has been completed, and correction of all outstanding deficiencies has been satisfactorily completed. The Contractor shall provide one operator to operate the system 24 hours per day, including weekends and holidays, during Phase I and Phase III endurance testing, in addition to any government personnel that may be made available. The Government may terminate testing at any time the system fails to perform as specified. Upon termination of testing by the Government or by the Contractor, the Contractor shall commence an assessment period as described for Phase II. During the last day of the test the Contractor shall verify the operation of each camera. Upon successful completion of the endurance test, the Contractor shall deliver test reports and other documentation as specified to the Government prior to acceptance of the system.

b. Phase I (Testing): The test shall be conducted 24 hours per day for 15 consecutive calendar days, including holidays, and the system shall operate as specified. The Contractor shall make no repairs during this phase of testing unless authorized by the

Government in writing. If the system experiences no failures during Phase I testing, the Contractor may proceed directly to Phase III testing after receipt by the Contractor of written permission from the Government.

c. Phase II (Assessment): After the conclusion of Phase I, the Contractor shall identify all failures, determine causes of all failures, repair all failures, and deliver a written report to the Government. The report shall explain in detail the nature of each failure, corrective action taken, results of tests performed, and shall recommend the point at which testing should be resumed. After delivering the written report, the Contractor shall convene a test review meeting at the job site to present the results and recommendations to the Government. The meeting shall not be scheduled earlier than 5 business days after receipt of the report by the Government. As a part of this test review meeting, the Contractor shall demonstrate that all failures have been corrected by performing appropriate portions of the performance verification test. Based on the Contractor's report and the test review meeting, the Government will determine the restart date, or may require that Phase I be repeated. If the retest is completed without any failures, the Contractor may proceed directly to Phase III testing after receipt by the Contractor of written permission from the Government.

d. Phase III (Testing): The test shall be conducted 24 hours per day for 15 consecutive calendar days, including holidays, and the system shall operate as specified. The Contractor shall make no repairs during this phase of testing unless authorized by the Government in writing.

e. Phase IV (Assessment): After the conclusion of Phase III, the Contractor shall identify all failures, determine causes of all failures, repair all failures, and deliver a written report to the Government. The report shall explain in detail the nature of each failure, corrective action taken, results of tests performed, and shall recommend the point at which testing should be resumed. After delivering the written report, the Contractor shall convene a test review meeting at the job site to present the results and recommendations to the Government. The meeting shall not be scheduled earlier than 5 business days after receipt of the report by the Government. As a part of this test review meeting, the Contractor shall demonstrate that all failures have been corrected by repeating appropriate portions of the performance verification test. Based on the Contractor's report and the test review meeting, the Government will determine the restart date, and may require that Phase III be repeated. The Contractor shall not commence any required retesting until after receipt of written notification by Government. After the conclusion of any retesting which the Government may require, the Phase IV assessment shall be repeated as if Phase III had just been completed.

f. Exclusions: The Contractor will not be held responsible for failures resulting from the following:

(1) An outage of the main power supply in excess of the capability of any backup power source, provided that the automatic initiation of all backup sources was accomplished.

(2) Failure of a Government furnished DTM circuit, provided that the failure was not due to Contractor furnished equipment, installation, or software.

(3) Failure of existing Government owned equipment, provided that the failure was not due to Contractor furnished equipment, installation, or software.

-- End of Section --

SECTION 16760

INTERCOMMUNICATION SYSTEM

PART 1 GENERAL

1.1 REFERENCES

The publications listed below form a part of this specification to the extent referenced. The publications are referred to in the text by basic designation only.

NATIONAL FIRE PROTECTION ASSOCIATION (NFPA)

NFPA 70	(1996) National Electrical Code

UNDERWRITERS LABORATORIES (UL)

UL 50	(1992; Rev Oct 1996) Enclosures for Electrical Equipment

1.2 SYSTEM DESCRIPTION

The system shall be solid state, modular in design, and shall be of the wired type with a single master with remote stations as indicated.

1.2.1 Sound Reproduction

The intercommunication system shall reproduce a signal at all receiving stations from a 40 dB minimum input signal referenced to a microphone sound pressure level (SPL) over the frequency range of 300 to 3300 Hz. The received signal shall have a dynamic range of 30 dB, adjustable at the receiving station. Unless otherwise specified SPL shall be 20 micro Paschal. The root-mean-square (rms) extraneous noise (e.g. hum) level introduced by the intercommunication system shall be at least 30 dB below the nominal signal level. Distortion, including envelope delay, intermodulation, cross talk, and other nonlinear sources, shall not exceed 5 percent.

1.2.2 System Operation and Service Features

1.2.2.1 Control and Power Requirements

The system shall have a power switch and an associated pilot light for ON and OFF operations. A volume control at each station shall be used to regulate listening volume. System shall operate on 110-125 Vac, single phase, 60 Hz.

1.2.2.2 Call-In Indication

Master stations shall have a "call-in" switch to provide an audible and/or visual indication of incoming calls from remote stations. Individual visual indication shall identify calling station and status, and remain actuated until a call is answered by a master station.

1.2.2.3 Identification Plates

In addition to the manufacturer's standard identification plates, engraved laminated phenolic identification plates shall be provided for each component connection and terminal. Identification labels shall be 3-layer black on white on black, engraved to show white letters on a black background. Any warning or caution labels shall be 3-layered red on white on red, engraved to show white letters on red background. Control switches and knobs shall be clearly marked with their function and status. Identification strips for station selector switches shall be located to clearly identify remote and master stations and shall be protected by transparent plastic inserts.

1.3 SUBMITTALS

Government approval is required for submittals with a "GA" designation; submittals having an "FIO" designation are for information only. The following shall be submitted in accordance with Section 01330 SUBMITTAL PROCEDURES:

SD-01 Data

Spare Parts; FIO;AR.

After approval of detail drawings and not later than 1 month prior to the date of beneficial occupancy, the Contractor shall furnish spare parts data for each different item of equipment and component in the system. The data shall include a complete list of parts and supplies, with current unit prices and source of supply.

SD-04 Drawings

Intercommunication System; FIO;AR.

Detail drawings shall consist of illustrations, schedules, performance charts, instructions, brochures, diagrams, catalog cuts, manufacturer's data, materials and equipment lists, and operational and general maintenance instructions. Detail drawings shall be submitted for the overall system and for each major component. Drawings shall illustrate how each item of equipment has been coordinated and will function properly in the system. Detail drawings shall include an overall system schematic indicating relationship of intercommunication units on one diagram and showing power source, system controls, impedance matches, plus number, size, and maximum lengths of interconnecting wires and indicate clearances required for maintenance and operation.

SD-09 Reports

Test Plan and Procedures; FIO;AR.

Test plan and procedures for the acceptance test shall explain in detail step-by-step actions and expected results to demonstrate compliance with the requirements specified. The procedures shall also explain methods for simulating the necessary conditions of operation to demonstrate system performance.

Acceptance Tests; GA|ED.

Upon completion and testing of the installed system, test reports shall be

submitted in booklet form showing all field tests performed to adjust each component and to prove compliance with the specified performance criteria. Each test report shall include the final position of controls and operating mode of the system. The manufacturer, model number, and serial number of test equipment used in each test shall also be included.

SD-19 Operation and Maintenance Manuals

Intercommunication System; FIO;AR.

Six complete copies of operation manuals outlining the step-by-step procedures required for system start-up, operation and shutdown. The manuals shall include equipment layout and schematics of simplified wiring and control diagrams of the system as installed. Instructions shall include the manufacturer's name, model number, and a brief description of equipment and components, and their basic operating features.

Six complete copies of maintenance manuals listing routine maintenance procedures, possible breakdowns and repairs, and troubleshooting guides.

1.4 DELIVERY AND STORAGE

All equipment delivered and placed in storage shall be stored with protection from the weather, humidity and temperature variation, dirt and dust, or other contaminants.

1.5 VERIFICATION OF DIMENSIONS

The Contractor shall become familiar with the details of the work and working conditions, shall verify dimensions in the field, and shall advise the Contracting Officer of any discrepancies before performing the work.

PART 2 PRODUCTS

2.1 MATERIALS

2.1.1 Standard Products

Material and equipment shall be the standard products of a manufacturer regularly engaged in the manufacture of such products. Items of equipment shall essentially duplicate equipment that have been in satisfactory use at least 2 years prior to bid opening. Equipment shall be supported by a service organization that is, in the opinion of the Contracting Officer, reasonably convenient to the site.

2.1.2 Identical Items

Items of the same classification shall be identical. This requirement includes equipment, modules, assemblies, parts, and components.

2.1.3 Nameplates

Each major component of equipment shall have the manufacturer's name, model number, and serial number on a plate screwed to the equipment.

2.2 TYPE 1 SYSTEM

Direct connected keyed intercommunication system shall accommodate 1 station in any combination of master stations and remote stations. Master

and remote stations shall be provided in the quantities indicated. Each master station shall communicate with the remote station by actuation of an appropriate selector switch.

2.2.1 Master Station

Desk master stations shall as a minimum conform to the following specifications:

Capacity:	Accommodate 4 stations
Speaker Sensitivity:	Minimum of 40 dB

2.2.2 Intercommunication Amplifier

The system intercommunication amplifier shall as a minimum conform to the following specifications:

Output Power:	2 watts rms or greater
Total Harmonic Distortion:	Less than 5 percent at rated output power with a load equivalent to one station connected to output terminals
Signal-To-Noise Ratio:	60 dB or greater at rated output
Frequency Response:	Plus or minus 2 dB from 200 Hz to 10,000 Hz

2.2.3 Remote Station

Weatherproof, post-mounted remote station shall have stainless steel faceplate with tamper proof mounting screws and aluminum backbox with "station call-in" capabilities. The remote station shall provide a speaker with a minimum sensitivity of 40 dB for speakers less than 200 mm in diameter and 45 dB for speakers 200 mm or greater. The remote station shall have a call announcement monitor lamp. Paint box and post the same color as the gate.

2.2.4 All-Call Amplifier

All-call amplifier shall as a minimum conform to the following specifications:

Output Power:	Minimum of 0.5 watt rms for each station
Total Harmonic Distortion:	Less than 5 percent at rated output power with a load equivalent to the quantity of stations connected to it in all-call mode of operation
Signal-To-Noise Ratio:	60 dB or greater at rated output
Frequency Response:	Plus or minus 2 dB from 200 Hz to 10,000 Hz

2.3 SPEAKER ENCLOSURES

Speaker enclosures shall be compatible with the speakers specified and comply with UL 50.

2.4 TERMINALS

Terminals shall be solderless, tool-crimped pressure type.

2.5 COMMUNICATIONS WIRING

Type of signal and control circuit wire and number of conductors shall be provided as recommended by the intercommunication system manufacturer, and as necessary to provide a complete and operable system. Where required, cable shall be UL classified low smoke and low flame for use in air plenums in accordance with NFPA 70.

2.6 SURGE PROTECTION

Major components of the system such as Master Stations, Amplifiers, and Remote Stations, shall have a device, either internal or external, which shall provide protection against voltage spikes and current surges.

PART 3 EXECUTION

3.1 INSTALLATION

All system components and appurtenances shall be installed in accordance with the manufacturer's instructions and as specified and shown. Units to be mounted outside or subject to inclement conditions shall be weatherproof or be mounted in weatherproof enclosures.

3.1.1 Signal and Control Circuits Wiring

Signal and control circuits shall be installed in accordance with NFPA 70 and as indicated.

3.1.2 Conduit, Cable Tray and Tubing Systems

Wiring shall be installed in rigid conduit or electric metallic tubing as shown drawings and as specified in Section 16415 ELECTRICAL WORK, INTERIOR.

3.2 GROUNDING

The connection of interfacing components shall be accomplished through the use of transformers and the tying of interconnecting lines to a unit ground bus at one end only. The ground and distribution ground buses shall be solid copper wire with insulating covering.

3.3 ACCEPTANCE TESTS

After installation has been completed, the Contractor shall conduct an acceptance test, using the approved test plan, to demonstrate that the equipment operates in accordance with specification requirements. The Contractor shall notify the Contracting Officer 10 days prior to the performance of tests. In no case shall notice be given until after the Contractor has received written approval of the test plans. The acceptance tests shall include originating and receiving messages at specified stations, at proper volume levels, without cross-talk or noise from other links or nondesignated units.

3.4 TRAINING

The Contractor shall conduct a training course for 3 members of the operating and maintenance staff as designated by the Contracting Officer. The training course will be given at the installation during normal working hours for a total of 3 hours and shall start after the system is functionally complete but prior to final acceptance tests. The field instructions shall cover all of the items contained in the approved operating and maintenance instructions, as well as the demonstration of routine maintenance operations. The Contracting Officer shall be notified at least 14 days prior to the start of the training course.

-- End of Section --

SECTION 16794

COAXIAL CABLE DATA TRANSMISSION MEDIA

PART 1 GENERAL

1.1 REFERENCES

The publications listed below form a part of this specification to the extent referenced. The publications are referred to in the text by the basic designation only.

CODE OF FEDERAL REGULATIONS (CFR)

47 CFR 15	Radio Frequency Devices

ELECTRONIC INDUSTRIES ASSOCIATION (EIA)

EIA 170	(1957) Electrical Performance Standards - Monochrome Television Studio Facilities

INSTITUTE OF ELECTRICAL AND ELECTRONICS ENGINEERS (IEEE)

IEEE C62.41	(1991) Surge Voltages in Low-Voltage AC Power Circuits

NATIONAL ELECTRICAL MANUFACTURERS ASSOCIATION (NEMA)

NEMA 250	(1991) Enclosures for Electrical Equipment (1000 Volts Maximum)

NATIONAL FIRE PROTECTION ASSOCIATION (NFPA)

NFPA 70	(1996; Errata) National Electrical Code

RURAL UTILITIES SERIVCE (RUS)

RUS REA PE-60	(1979) Trunk Carrier Systems
RUS REA PE-80	(1979; Rev Oct 1982) Gas Tube Surge Arresters

1.2 SYSTEM DESCRIPTION

1.2.1 General

Coaxial cable data transmission media (DTM) for analog or digital communications shall be provided as specified. The data transmission media shall consist of: modems, repeaters, amplifiers, and other equipment as required. All computing devices, as defined in 47 CFR 15, shall be certified to comply with the requirements for Class A computing devices and labeled as set forth in 47 CFR 15. Let through voltage shall be less than 400 V for IEE C at C3 (10kA) wave. Surge current capaacity 40 kA per phase.

1.2.2 Electrical Requirements

The equipment shall operate from a voltage source as shown. Equipment shall tolerate voltage source variations of plus or minus 10 percent, and 60 Hz frequency variations of plus or minus 2 percent, with no degradation in performance.

1.2.3 Power Line Surge Protection

Equipment connected to ac circuits shall be protected from power line surges. Equipment protection shall withstand surge waveforms described in IEEE C62.41. Fuses shall not be used for surge protection.

1.2.4 Communications Circuit Surge Protection

Communications equipment shall be protected against surges induced on any communications circuit. All cables and conductors which serve as communications circuits shall have surge protection circuits installed at each end at the communication equipment that meets the requirements of RUS REA PE-60. Additional triple electrode gas surge protectors meeting the requirements of RUS REA PE-80 shall be provided on each conductor within 900 mm of the building cable entrance. Fuses shall not be used for surge protection.

1.2.5 Video and Sync Signal Circuit Surge Protection

All circuits, except coax cable interconnecting video equipment located indoors, used for sync or video signal transmission shall include protective devices at both ends to safeguard the video equipment against surges. The surge suppression device shall not attenuate or reduce the video or sync signal under normal conditions. The surge suppression device shall be capable of dissipating not less than 1500 watts for 1 millisecond, and the response time from zero volts to clamping shall not be greater than 5 nanoseconds. Fuses shall not be used for surge protection.

1.3 ENVIRONMENTAL REQUIREMENTS

Equipment and cable to be used indoors shall be rated for continuous operation under ambient environmental conditions of 0 to 50 degrees C dry bulb and 10 to 95 percent humidity, noncondensing. Equipment and cable to be used outdoors shall be rated for continuous operation under ambient environmental conditions of minus 40 to plus 70 degrees C and humidity of up to 100 percent condensing or as normally encountered for the installed location. Components located in areas where fire or explosion hazards may exist because of flammable gases or vapors, flammable liquids, combustible dust, or ignitable fibers or flyings, shall be rated and installed in accordance with Chapter 5 of NFPA 70 and as shown.

1.4 SUBMITTALS

Government approval is required for submittals with a "GA" designation; submittals having an "FIO" designation are for information only. The following shall be submitted in accordance with Section 01330 SUBMITTAL PROCEDURES:

SD-01 Data

Manufacturers' Data; GA|ED.

The data package shall include manufacturers' data for all materials

provided under this specification.

Data Transmission Media Descriptions and Analyses; FIO;AR

a. Video and sync signal transmision losses in decibels (dB) on each DTM circuit.

PART 2 PRODUCTS

2.1 DATA TRANSMISSION EQUIPMENT

2.1.1 Taps and Splitters

Taps and splitters shall have a frequency response suitable for two-way operation. All taps shall be of the directional coupler type. Isolation between desired and undesired signal paths shall be 30 dB minimum. The devices shall be designed for indoor or outdoor use as applicable. Fittings shall be of the center conductor screwdown type and shall be mechanically and electrically secure. All terminal installation material such as cable fittings and grounding blocks shall be provided.

2.2 VIDEO EQUIPMENT

2.2.1 Other Video Equipment

Video equipment not specified herein will be as specified in 16751 CLOSED CIRCUIT TELEVISION SYSTEMS.

2.3 CABLE

2.3.1 Foam-Filled Rigid Coaxial Cable

Foam-filled cable shall be 10.5, 12.7, or 19.1 mm (0.412, 0.500, or 0.750 inch) polyethylene foam insulated cable with solid copper center conductor and solid aluminum sheath. The cable shall have a characteristic impedance of 75 ohms plus or minus 2 ohms over the passband frequency range and a structural return loss of 26 dB maximum in the frequency passband. Maximum attenuation at 21.1 degrees C (70 degrees F) and 270 MHz shall be 1.87 dB/304 m (1.87 dB/100 feet) for 10.5 mm (0.412 inch) cable, 1.48 dB/304 m (1.48 dB/100 feet) for 12.7 mm (0.500 inch) cable, or 1.10 dB/304 m (1.10 dB/100 feet) for 19.1 mm (0.750 inch) cable. The maximum 60 Hz ac loop resistance at 21.1 degrees C (70 degrees F) shall be 2.4 ohms/305 m (2.4 ohms/1000 feet) for 10.5 mm (0.412 inch) cable or 1.5 ohms/305 m (1.5 ohms/1000 feet) for 12.7 and 19.1 mm (0.500 and 0.750 inch) cable.

2.3.2 Flexible and Semirigid Coaxial Cable

The coaxial cable shall have a characteristic impedance of 75 ohms plus or minus 3 ohms. All cable components shall be able to withstand the environment the cable is installed in for a minimum of 20 years. Coaxial cable shall meet the following requirements:

COAXIAL CABLE PARAMETERS
TYPE RG-59

Inner Conductor:	23 American Wire Gauge Solid, Copper Covered Steel Wire Nominal Overall Diameter of 0.058 mm

COAXIAL CABLE PARAMETERS
TYPE RG-59

	Nominal Direct current resistance at 20 degrees C of 154.2 ohms per km Elongation of 1 percent minimum
Dielectric Core:	Solid Polyethylene Nominal Diameter of 3.71 mm
Outer Conductor:	Single braid of 34 American Wire Gauge bare copper wire 95 percent shield coverage minimum Maximum Diameter of 0.485 mm
Jacket:	Black, Non-contaminating Polyvinylchloride (PVC) Nominal Diameter of 6.15 mm
Velocity of Propagation:	66 percent nominal
Eccentricity:	10 percent maximum
Capacitance:	72 picofarads per m, maximum
Attenuation:	29.6 decibels per 100 m, maximum at 0.4 Gigahertz 52.6 decibels per 100 m, maximum at 1 Gigahertz

COAXIAL CABLE PARAMETERS
TYPE RG-11

Inner Conductor:	18 American wire Gauge Seven strands of tinned copper wire Nominal Overall diameter of 0.122 mm Nominal Direct Current Resistance at 20 degrees C of 19.9 ohms per km Elongation of 1 percent minimum
Dielectric Core:	Solid Polyethylene Nominal Diameter of 7.24 mm
Outer Conductor:	Single braid of 33 American Wire Gauge bare copper wire 95 percent shield coverage minimum Maximum Diameter of 0.86 mm
Jacket:	Black, Non-contaminating Polyvinylchloride (PVC) Nominal diameter of 10.29 mm
Velocity of Propagation:	66 percent nominal
Eccentricity:	10 percent maximum
Capacitance:	72 picofarads per m, maximum

COAXIAL CABLE PARAMETERS
TYPE RG-11

Attenuation:	17.1 decibels per 100 m, maximum at 0.4 gigahertz 30.9 decibels per 100 m, maximum at 1 Gigahertz

2.3.3 Protective Coverings and Cable Jackets

Protective coverings and cable jackets in any single length of cable shall be continuous and of the same material. The protective coverings shall be free from holes, splits, blisters, and other imperfections. The covering shall be flame retardant, moisture resistant, nontoxic, and electrically nonconductive.

2.3.4 Underground Cable

Where cable is installed in buried conduit, the cable shall contain an additional moisture barrier in the form of a flooding compound interspersed between the outer polyethylene jacket and the sheath. The flooding compound shall be electrically non-conductive, non-corrosive, and as recommended by the cable manufacturer.

2.4 CABLE CONNECTORS

2.4.1 Foam-Filled Rigid

Connectors used to connect aluminum coaxial cable to amplifiers, taps, and splitters shall be of a BNC type that incorporates an integral radiation suppressing sleeve supporting the aluminum sheath.

2.4.2 Flexible and Semirigid

Connectors for RG/58 and RG/11 coaxial cable shall be bayonet connectors (BNC). Connectors shall be either crimp-on or solder type.

2.5 CONDUIT

Conduit as specified in Section 16415 ELECTRICAL WORK, INTERIOR and Section 16528 EXTERIOIR LIGHTING INCLUDING SECURITY AND CCTV APPLICATION and as shown shall be furnished.

2.6 ENCLOSURES

Metal enclosures shall be provided as needed for equipment not housed in racks or supplied with a housing. Enclosure finish color shall be manufacturer's standard, unless otherwise indicated. The enclosures shall be as specified or shown.

2.6.1 Interior

Enclosures used in an interior environment shall meet the requirements of NEMA 250, Type 12.

2.6.2 Exterior

Enclosures used in an exterior environment shall meet the requirements of NEMA 250, Type 4.

2.6.3 Corrosion Resistant

Enclosures in a corrosive environment shall meet the requirements of NEMA 250, Type 4X.

2.7 TAMPER PROVISIONS

2.7.1 Enclosure Covers

Covers of pull and junction boxes provided to facilitate installation of the system need not be provided with tamper switches if they contain no splices or connections, but shall be protected by tack welding or brazing the covers in place. Zinc labels shall be affixed to such boxes indicating they contain no connections. These labels shall not indicate that the box is part of the security system.

2.7.2 Conduit-Enclosure Connections

Conduit-enclosure connections shall be protected by tack welding or brazing the conduit to the enclosure. Tack welding using either gas or arc welding, or brazing shall be done in addition to standard conduit-enclosure connection methods as described in NFPA 70.

PART 3 EXECUTION

3.1 INSTALLATION

System components and appurtenances shall be installed in accordance with the manufacturer's instructions and as shown. All necessary interconnections, services, and adjustments required for a complete and operable DTM system shall be provided.

3.1.1 Enclosure Penetrations

Enclosure penetrations shall be from the bottom unless the system design requires penetrations from other directions. Penetrations of interior enclosures involving transitions of conduit from interior to exterior, and all penetrations on exterior enclosures shall be sealed with rubber silicone sealant to preclude the entry of water. The conduit riser shall terminate in a hot-dipped galvanized metal cable terminator. The terminator shall be filled with an approved sealant as recommended by the cable manufacturer, and in such a manner that the cable is not damaged.

3.1.2 Interconnection of Video Equipment

Signal paths shall be connected between video equipment of 7.5 m or less with RG-59/U coaxial cable, and signal paths longer than 7.5 m with RG-11/U coaxial cable. Cables shall be as short as practicable for each signal path without causing strain at the connectors. Rack mounted equipment on slide mounts shall have cables of sufficient length to allow full extension of the slide rails from the rack.

3.1.3 Termination of Video Equipment

Terminators shall be installed on equipment as needed to properly terminate the video signal so that it complies with EIA 170.

3.1.4 Interior Electrical Work

Interior electrical work shall be installed as specified in Section 16415 ELECTRICAL WORK, INTERIOR and as shown.

3.1.5 Exterior Electrical Work

3.1.5.1 Underground

Except as otherwise specified, underground electrical work shall be installed as specified in Section 16528 EXTERIOR LIGHTING INCLUDING SECURITY AND CCTV APPLICATION and as shown.

3.1.5.2 Burial Depth

Minimum burial depth for direct burial cable shall be 610 mm, but not less than the depth of the frost line.

3.1.5.3 Warning Tape

Cable shall be placed below a minimum 76.2 mm (3 inch) wide plastic warning tape buried in the same trench or slot. The tape shall be 300 mm above the cable. The warning tape shall be continuously imprinted with the words "WARNING - COMMUNICATION CABLE BELOW" at not more than 1.2 m (48 inch) intervals.

3.1.5.4 Splices

Splices shall be installed in cable boxes. Sufficient cable shall be provided in each splicing location to properly rack and splice the cables, and to provide extra cable for additional splices. All cable ends shall be protected at all times with end caps except during actual splicing. During the splicing operations, means shall be provided to protect the unspliced portions of the cable from the intrusion of moisture and other foreign matter.

3.1.5.5 Installation in Ducts and Conduits

A cable feeder guide shall be used between the cable reel and the face of the duct and conduit to protect the cable and guide it into the duct and conduit as it is played off the reel. As the cable is played off the reel, it shall be carefully inspected for jacket defects. Precautions shall be taken during installation to prevent the cable from being "kinked" or "crushed." A pulling eye shall be attached to the cable and used to pull the cable through the duct and conduit system. Cable shall be hand fed and guided through each manhole. As the cable is played off the reel into the cable feeder guide, it shall be sufficiently lubricated with a type of lubricant recommended by the cable manufacturer. Where the cable is pulled through a manhole, additional lubricant shall be applied at all intermediate manholes. Dynamometers or load-cell instruments shall be used to ensure that the pulling line tension does not exceed the installation tension value specified by the cable manufacturer. The mechanical stress placed upon a cable during the installation shall not be such that the cable is twisted or stretched.

3.1.6 Identification and Labeling

Identification tags or labels shall be supplied for each cable. The

labeling format shall be identified and a complete record shall be provided to the Government with the final documentation. Each cable shall be identified with type of signal being carried and termination points.

3.2 TESTING

3.2.1 General

Personnel, equipment, instrumentation, and supplies necessary to perform all testing shall be provided.

3.2.2 Contractor's Field Test

The Contractor shall verify the complete operation of the data transmission system during the Contractor's field testing as specified in Section 16751 CLOSED CIRCUIT TELEVISION SYSTEMS. Tests of video coaxial cable transmitting analog signals shall include testing each circuit for continuity and verification that each circuit passes a full bandwidth signal that complies with EIA 170. A report containing results of the field test shall be prepared and submitted.

-- End of Section --